Federal Register

10–9–07 Tuesday
Vol. 72 No. 194 Oct. 9, 2007

Pages 57195–57482

The **FEDERAL REGISTER** (ISSN 0097–6326) is published daily, Monday through Friday, except official holidays, by the Office of the Federal Register, National Archives and Records Administration, Washington, DC 20408, under the Federal Register Act (44 U.S.C. Ch. 15) and the regulations of the Administrative Committee of the Federal Register (1 CFR Ch. I). The Superintendent of Documents, U.S. Government Printing Office, Washington, DC 20402 is the exclusive distributor of the official edition. Periodicals postage is paid at Washington, DC.

The **FEDERAL REGISTER** provides a uniform system for making available to the public regulations and legal notices issued by Federal agencies. These include Presidential proclamations and Executive Orders, Federal agency documents having general applicability and legal effect, documents required to be published by act of Congress, and other Federal agency documents of public interest.

Documents are on file for public inspection in the Office of the Federal Register the day before they are published, unless the issuing agency requests earlier filing. For a list of documents currently on file for public inspection, see *www.archives.gov.*

The seal of the National Archives and Records Administration authenticates the Federal Register as the official serial publication established under the Federal Register Act. Under 44 U.S.C. 1507, the contents of the **Federal Register** shall be judicially noticed.

The **Federal Register** is published in paper and on 24x microfiche. It is also available online at no charge as one of the databases on GPO Access, a service of the U.S. Government Printing Office.

The online edition of the **Federal Register** *www.gpoaccess.gov/nara,* available through GPO Access, is issued under the authority of the Administrative Committee of the Federal Register as the official legal equivalent of the paper and microfiche editions (44 U.S.C. 4101 and 1 CFR 5.10). It is updated by 6 a.m. each day the **Federal Register** is published and includes both text and graphics from Volume 59, Number 1 (January 2, 1994) forward.

For more information about GPO Access, contact the GPO Access User Support Team, call toll free 1-888-293-6498; DC area 202-512-1530; fax at 202-512-1262; or via e-mail at *gpoaccess@gpo.gov.* The Support Team is available between 7:00 a.m. and 9:00 p.m. Eastern Time, Monday–Friday, except official holidays.

The annual subscription price for the **Federal Register** paper edition is $749 plus postage, or $808, plus postage, for a combined **Federal Register, Federal Register** Index and List of CFR Sections Affected (LSA) subscription; the microfiche edition of the **Federal Register** including the **Federal Register** Index and LSA is $165, plus postage. Six month subscriptions are available for one-half the annual rate. The prevailing postal rates will be applied to orders according to the delivery method requested. The price of a single copy of the daily **Federal Register,** including postage, is based on the number of pages: $11 for an issue containing less than 200 pages; $22 for an issue containing 200 to 400 pages; and $33 for an issue containing more than 400 pages. Single issues of the microfiche edition may be purchased for $3 per copy, including postage. Remit check or money order, made payable to the Superintendent of Documents, or charge to your GPO Deposit Account, VISA, MasterCard, American Express, or Discover. Mail to: U.S. Government Printing Office—New Orders, P.O. Box 979050, St. Louis, MO 63197-9000; or call toll free 1-866-512-1800, DC area 202-512-1800; or go to the U.S. Government Online Bookstore site, see *bookstore.gpo.gov.*

There are no restrictions on the republication of material appearing in the **Federal Register.**

How To Cite This Publication: Use the volume number and the page number. Example: 72 FR 12345.

Postmaster: Send address changes to the Superintendent of Documents, Federal Register, U.S. Government Printing Office, Washington DC 20402, along with the entire mailing label from the last issue received.

SUBSCRIPTIONS AND COPIES

PUBLIC	
Subscriptions:	
Paper or fiche	**202–512–1800**
Assistance with public subscriptions	**202–512–1806**
General online information	**202–512–1530; 1–888–293–6498**
Single copies/back copies:	
Paper or fiche	**202–512–1800**
Assistance with public single copies	**1–866–512–1800 (Toll-Free)**
FEDERAL AGENCIES	
Subscriptions:	
Paper or fiche	**202–741–6005**
Assistance with Federal agency subscriptions	**202–741–6005**

Printed on recycled paper.

Contents

Federal Register

Vol. 72, No. 194

Tuesday, October 9, 2007

Agriculture Department
See Animal and Plant Health Inspection Service
See Food Safety and Inspection Service
See Forest Service
See Rural Housing Service
NOTICES
Agency information collection activities; proposals, submissions, and approvals, 57284–57285

Animal and Plant Health Inspection Service
RULES
Plant-related quarantine, domestic:
Emerald ash borer, 57195

Arts and Humanities, National Foundation
See National Foundation on the Arts and the Humanities

Centers for Disease Control and Prevention
NOTICES
Agency information collection activities; proposals, submissions, and approvals, 57338–57339

Coast Guard
RULES
Ports and waterways safety; regulated navigation areas, safety zones, security zones, etc.:
Biscayne Bay, FL, 57200–57202

Commerce Department
See Foreign-Trade Zones Board
See International Trade Administration
See National Institute of Standards and Technology
See National Oceanic and Atmospheric Administration
See Patent and Trademark Office
RULES
Federal claims collection, 57198–57199

Corporation for National and Community Service
NOTICES
Agency information collection activities; proposals, submissions, and approvals, 57311

Defense Department
NOTICES
Meetings:
Transformation Advisory Group, 57311–57312

Delaware River Basin Commission
PROPOSED RULES
Water Quality Regulations, Water Code, and Comprehensive Plan:
Lower Delaware River; special protection waters classification, 57255–57257

Education Department
NOTICES
Agency information collection activities; proposals, submissions, and approvals, 57312
Committees; establishment, renewal, termination, etc.:
Performance Review Board, 57312–57313

Employment and Training Administration
NOTICES
Reports and guidance documents; availability, etc.:
Rural Industrialization Loan and Grant Program; compliance certifications requests, 57349–57350

Energy Department
See Energy Efficiency and Renewable Energy Office
See Federal Energy Regulatory Commission

Energy Efficiency and Renewable Energy Office
PROPOSED RULES
Energy conservation:
Commercial and industrial equipment; energy efficiency program—
Residential clothes dryers and room air conditioners, 57254–57255

Environmental Protection Agency
RULES
Air programs:
Volatile organic compound emissions control—
Paper, film, foil, metal furniture, and large appliance coatings; control techniques guidelines, 57215–57222
Air quality implementation plans; approval and promulgation; various States; air quality planning purposes; designation of areas:
Georgia, 57202–57207
Pennsylvania, 57207–57209
South Carolina, 57209–57215
Organization, functions, and authority delegations:
Solid Waste and Emergency Response Office, 57235–57241
Toxic substances:
Significant new uses—
Perfluoroalkyl sulfonates, 57222–57235
PROPOSED RULES
Air quality implementation plans; approval and promulgation; various States:
South Carolina, 57257–57258
Hazardous waste program authorizations:
Michigan, 57258–57260
NOTICES
Meetings:
Clean Air Scientific Advisory Committee, 57333

Executive Office of the President
See Presidential Documents

Farm Credit Administration
NOTICES
Meetings; Sunshine Act, 57334

Federal Aviation Administration
RULES
Air carrier certification and operations:
Passenger-carrying operations conducted for compensation and hire in other than standard category aircraft; exemptions; policy statement, 57196–57198
Airworthiness directives:
Turbomeca S.A.; correction, 57195–57196

NOTICES
Agency information collection activities; proposals, submissions, and approvals, 57375

Federal Deposit Insurance Corporation
NOTICES
Meetings:
Economic Inclusion Advisory Committee, 57334

Federal Emergency Management Agency
RULES
Flood elevation determinations:
North Carolina, 57245–57252
Various States, 57241–57245
NOTICES
Disaster and emergency areas:
Illinois, 57339–57340
Minnesota, 57340
Oklahoma, 57340
Disaster assistance:
Countrywide per capita impact indicator, 57340
Disaster grant amounts adjustment, 57341
Statewide per capita impact indicator, 57341
Grants and cooperative agreements; availability, etc.:
Individuals and Households Program, 57341
Reports and guidance documents; availability, etc.:
National Response Framework; supporting documents, 57341–57342

Federal Energy Regulatory Commission
NOTICES
Electric rate and corporate regulation combined filings, 57317–57320
Environmental statements; availability, etc.:
Alcoa Generating, Inc., et al., 57320–57321
Columbia Gas Transmission Corp., 57321–57322
Symbiotics, LLC, 57322
Environmental statements; notice of intent:
CenterPoint Energy Gas Transmission, 57322–57324
Hydroelectric applications, 57324–57332
Meetings:
El Paso Natural Gas Co., 57332–57333
Applications, hearings, determinations, etc.:
California Water Resources Department, 57313
FPL Energy Mower County, LLC, et al., 57313–57314
J.D. Wind 4, LLC, 57314
Matanuska Electric Association, Inc., 57314
Midwestern Gas Transmission Co., 57314–57315
Premier Energy Marketing LLC, 57315
Public Power & Utility, Inc., 57315–57316
Southern Natural Gas Co., 57316
Southwestern Power Administration, 57316–57317
Sweetwater Wind 4 LLC, et al., 57317

Federal Housing Finance Board
NOTICES
Meetings; Sunshine Act, 57334

Federal Railroad Administration
NOTICES
Meetings:
Railroad Safety Advisory Committee, 57375–57376

Federal Reserve System
NOTICES
Banks and bank holding companies:
Change in bank control, 57334–57335
Formations, acquisitions, and mergers, 57335
Permissable nonbanking activities, 57335

Fish and Wildlife Service
PROPOSED RULES
Endangered and threatened species:
Critical habitat designations—
Sierra Nevada bighorn sheep, 57276–57278
Findings on petitions, etc.—
Black-footed albatross, 57278–57283
Giant Palouse earthworm, 57273–57276
NOTICES
Comprehensive conservation plans; availability, etc.:
Innoko National Wildlife Refuges, AK, 57343–57344
Mississippi Sandhill Crane National Wildlife Refuge, MS, 57344–57345
Endangered and threatened species:
Survival enhancement permits—
Volusia County, FL; Florida scrub-jay; safe harbor agreement, 57345–57346
Virginia Northern Flying Squirrel; post-delisting monitoring plan, 57346–57347

Food and Drug Administration
RULES
Animal drugs, feeds, and related products:
Florfenicol, 57199–57200

Food Safety and Inspection Service
NOTICES
Meetings:
Shiga toxin-producing E. coli; public health significance, 57285–57286

Foreign-Trade Zones Board
NOTICES
Applications, hearings, determinations, etc.:
Arizona—
Johnson Controls Battery Group, Inc., 57287–57288

Forest Service
NOTICES
Recreation fee areas:
Daniel Boone National Forest, KY; picnic shelter and amphitheater scenic area rental fees, 57286

Health and Human Services Department
See Centers for Disease Control and Prevention
See Food and Drug Administration
See Substance Abuse and Mental Health Services Administration
NOTICES
Grant and cooperative agreement awards:
Meharry Medical College, 57335–57337
Grants and cooperative agreements; availability, etc.:
Family Planning Services Program; correction, 57337
Scientific misconduct findings; administrative actions:
Sudbo, Jon, D.D.S., 57337–57338

Homeland Security Department
See Coast Guard
See Federal Emergency Management Agency
See Transportation Security Administration

Interior Department
See Fish and Wildlife Service
See Land Management Bureau
See National Park Service

International Trade Administration
NOTICES
Antidumping:
Freshwater crawfish tail meat—
China, 57288–57296
Frozen fish fillets from—
Vietnam, 57296–57297
Polyethylene terephthalate film, sheet, and strip from—
India and Taiwan, 57297–57298
Steel concrete reinforcing bars from—
Latvia, 57298–57299
Committees; establishment, renewal, termination, etc.:
District Export Council, 57299–57300
Countervailing duties:
Polyethylene terephthalate film, sheet, and strip from—
India, 57300–57301
Reports and guidance documents; availability, etc.:
Propane Education and Research Council (PERC), operations, market changes and federal programs, 57301–57302
Applications, hearings, determinations, etc.:
Illinois Institute of Technology, 57299

Labor Department
See Employment and Training Administration
NOTICES
Agency information collection activities; proposals, submissions, and approvals, 57349

Land Management Bureau
NOTICES
Closure of public lands:
Montana, 57347

Legal Services Corporation
NOTICES
Meetings; Sunshine Act, 57350–57351

National Archives and Records Administration
NOTICES
Agency information collection activities; proposals, submissions, and approvals, 57351

National Foundation on the Arts and the Humanities
NOTICES
Meetings; Sunshine Act, 57351–57352

National Highway Traffic Safety Administration
RULES
Motor vehicle safety standards:
Brake hoses; technical amendments, 57450–57458
PROPOSED RULES
Motor vehicle safety standards:
Brake hoses, 57459–57473
Electric powered vehicles; electrolyte spillage and electrical shock protection, 57260–57273
NOTICES
Motor vehicle theft prevention standards; exemption petitions, etc.:
Fuji Heavy Industries U.S.A., Inc., 57376–57377

National Institute of Standards and Technology
NOTICES
Meetings:
Earthquake Hazards Reduction Advisory Committee, 57302

National Oceanic and Atmospheric Administration
RULES
Fishery conservation and management:
Alaska; fisheries of Exclusive Economic Zone—
Pacific ocean perch, 57252–57253
NOTICES
Committees; establishment, renewal, termination, etc.:
Commercial Remote Sensing Advisory Committee, 57302–57303
Endangered and threatened species:
Recovery plans—
Upper Columbia River spring-run chinook salmon and steelhead, 57303–57307
Environmental statements; notice of intent:
Caribbean, Gulf, and South Atlantic fisheries—
Puerto Rico and U.S. Virgin Islands spiny lobster and reef fish, 57307–57308
Meetings:
Climate Change Science Program Product Development Committee, 57308–57309
New England Fishery Management Council, 57309
Pacific Fishery Management Council, 57310

National Park Service
NOTICES
Meetings:
Delaware Water Gap National Recreation Area Citizen Advisory Commission, 57347–57348
National Register of Historic Places; pending nominations, 57348–57349

Nuclear Regulatory Commission
RULES
Production and utilization facilities; domestic licensing:
Nuclear power plants; construction activities; limited work authorizations, 57416–57447
NOTICES
Operating licenses, amendments; no significant hazards considerations; biweekly notices, 57352–57358

Patent and Trademark Office
NOTICES
Agency information collection activities; proposals, submissions, and approvals, 57310–57311

Personnel Management Office
NOTICES
Privacy Act; computer matching programs, 57358–57359

Presidential Documents
PROCLAMATIONS
Special observances:
Columbus Day (Proc. 8186), 57479–57480
German-American Day (Proc. 8185), 57475–57478
Leif Erikson Day (Proc. 8187), 57481–57482

Rural Housing Service
NOTICES
Agency information collection activities; proposals, submissions, and approvals, 57287

Securities and Exchange Commission
NOTICES
Investment Company Act of 1940:
JNF Advisors, Inc., et al., 57359–57361
Securities:
Suspension of trading—
Alliance Transcription Services, Inc., 57362

Self-Regulatory Organizations:
NYSE Arca, Inc., 57362–57364
Self-regulatory organizations; proposed rule changes:
American Stock Exchange LLC, 57364–57366
New York Stock Exchange LLC, 57366–57372
NYSE Arca, Inc., 57372–57374

State Department
NOTICES
Debarment proceedings:
Davilyn Corp., 57374

State Justice Institute
NOTICES
Reports and guidance documents; availability, etc.:
Grants, cooperative agreements, and contracts, guidelines, 57382–57414

Substance Abuse and Mental Health Services Administration

NOTICES
Meetings:
Substance Abuse Treatment Center National Advisory Council, 57339

Surface Transportation Board
NOTICES
Meetings:
Rail Energy Transportation Advisory Committee, 57377

Transportation Department
See Federal Aviation Administration
See Federal Railroad Administration
See National Highway Traffic Safety Administration
See Surface Transportation Board
NOTICES
Agency information collection activities; proposals, submissions, and approvals, 57374–57375

Transportation Security Administration
NOTICES
Maritime and land transportation security:
Transportation Worker Identification Credential; enrollment—
Wilmington, DE, 57342–57343

Treasury Department
NOTICES
Agency information collection activities; proposals, submissions, and approvals, 57377–57379

Separate Parts In This Issue

Part II
State Justice Institute, 57382–57414

Part III
Nuclear Regulatory Commission, 57416–57447

Part IV
Transportation Department, National Highway Traffic Safety Administration, 57450–57473

Part V
Executive Office of the President, Presidential Documents, 57475–57482

Reader Aids
Consult the Reader Aids section at the end of this issue for phone numbers, online resources, finding aids, reminders, and notice of recently enacted public laws.

To subscribe to the Federal Register Table of Contents LISTSERV electronic mailing list, go to http://listserv.access.gpo.gov and select Online mailing list archives, FEDREGTOC-L, Join or leave the list (or change settings); then follow the instructions.

CFR PARTS AFFECTED IN THIS ISSUE

A cumulative list of the parts affected this month can be found in the Reader Aids section at the end of this issue.

3 CFR

Proclamations:

8185 57477
8186 57479
8187 57481

7 CFR

301 57195

10 CFR

2 57416
50 57416
51 57416
52 57416
100 57416

Proposed Rules:

430 57254

14 CFR

39 57195
91 57196
119 57196
121 57196
135 57196

15 CFR

19 57198
21 57198
22 57198

18 CFR

Proposed Rules:

410 57255

21 CFR

516 57199
556 57199

33 CFR

165 57200

40 CFR

52 (3 documents) 57202, 57207, 57209
59 57215
81 57207
97 57209
721 57222
750 57235
761 57235

Proposed Rules:

52 57257
271 57258

44 CFR

65 57241
67 57245

49 CFR

571 57450

Proposed Rules:

571 (2 documents) 57260, 57459

50 CFR

679 57252

Proposed Rules:

17 (3 documents) 57273, 57276, 57278

Rules and Regulations

Federal Register

Vol. 72, No. 194

Tuesday, October 9, 2007

This section of the FEDERAL REGISTER contains regulatory documents having general applicability and legal effect, most of which are keyed to and codified in the Code of Federal Regulations, which is published under 50 titles pursuant to 44 U.S.C. 1510.

The Code of Federal Regulations is sold by the Superintendent of Documents. Prices of new books are listed in the first FEDERAL REGISTER issue of each week.

DEPARTMENT OF AGRICULTURE

Animal and Plant Health Inspection Service

7 CFR Part 301

[Docket No. APHIS–2007–0028]

Emerald Ash Borer; Quarantined Areas; Maryland

AGENCY: Animal and Plant Health Inspection Service, USDA.

ACTION: Affirmation of interim rule as final rule.

SUMMARY: We are adopting as a final rule, without change, an interim rule that amended the emerald ash borer regulations by adding Prince George's County, MD, to the list of areas quarantined because of emerald ash borer. The interim rule was necessary to prevent the artificial spread of the emerald ash borer from Prince George's County, MD, into noninfested areas of the United States. As a result of the interim rule, the interstate movement of regulated articles from that county is restricted.

DATES: Effective on October 9, 2007, we are adopting as a final rule the interim rule published at 72 FR 30458–30460 on June 1, 2007.

FOR FURTHER INFORMATION CONTACT: Ms. Deborah McPartlan, National Emerald Ash Borer Program Manager, Emergency and Domestic Programs, PPQ, APHIS, 4700 River Road Unit 134, Riverdale, MD 20737–1236; (301) 734–4387.

SUPPLEMENTARY INFORMATION:

Background

The emerald ash borer (EAB) (*Agrilus planipennis*) is a destructive woodboring insect that attacks ash trees (*Fraxinus* spp., including green ash, white ash, black ash, and several horticultural varieties of ash). The insect, which is indigenous to Asia and known to occur in China, Korea, Japan, Mongolia, the Russian Far East, Taiwan, and Canada, eventually kills healthy ash trees after it bores beneath their bark and disrupts their vascular tissues.

The EAB regulations in 7 CFR 301.53–1 through 301.53–9 (referred to below as the regulations) restrict the interstate movement of regulated articles from quarantined areas to prevent the artificial spread of EAB to noninfested areas of the United States.

In an interim rule [1] effective and published in the **Federal Register** on June 1, 2007 (72 FR 30458–30460, Docket No. APHIS–2007–0028), we amended the EAB regulations in § 301.53–3(c) by adding Prince George's County, MD, to the list of quarantined areas.

Comments on the interim rule were required to be received on or before July 31, 2007. We received one comment by that date. The comment was from a State insect pest prevention and management program supervisor who supported the interim rule. Therefore, for the reasons given in the interim rule, we are adopting the interim rule as a final rule.

This action also affirms the information contained in the interim rule concerning Executive Order 12866 and the Regulatory Flexibility Act, Executive Orders 12372 and 12988, and the Paperwork Reduction Act. Further, for this action, the Office of Management and Budget has waived its review under Executive Order 12866.

List of Subjects in 7 CFR Part 301

Agricultural commodities, Plant diseases and pests, Quarantine, Reporting and recordkeeping requirements, Transportation.

PART 301—DOMESTIC QUARANTINE NOTICES

■ Accordingly, we are adopting as a final rule, without change, the interim rule that amended 7 CFR part 301 and that was published at 72 FR 30458–30460 on June 1, 2007.

[1] To view the interim rule and the comment we received, go to *http://www.regulations.gov/fdmspublic/component/main?main=DocketDetail&d=APHIS–2007–0028.*

Done in Washington, DC, this 2nd day of October 2007.

Kevin Shea,

Acting Administrator, Animal and Plant Health Inspection Service.

[FR Doc. E7–19839 Filed 10–5–07; 8:45 am]

BILLING CODE 3410–34–P

DEPARTMENT OF TRANSPORTATION

Federal Aviation Administration

14 CFR Part 39

[Docket No. FAA–2006–23954; Directorate Identifier 2005–NE–54–AD; Amendment 39–15202; AD 2007–19–11]

RIN 2120–AA64

Airworthiness Directives; Turbomeca S.A. Artouste III B, Artouste III B1, and Artouste III D Turboshaft Engines; Correction

AGENCY: Federal Aviation Administration (FAA), Department of Transportation (DOT).

ACTION: Final rule; correction.

SUMMARY: The FAA is correcting airworthiness directive (AD) 2007–19–11. That AD applies to Turbomeca S.A. Artouste III B, Artouste III B1, and Artouste III D turboshaft engines. We published that AD in the **Federal Register** on September 21, 2007 (72 FR 53937). The AD number of the superseded AD, is incorrect in two places in the preamble, and in one place in paragraph (b). This document corrects those AD numbers. In all other respects, the original document remains the same.

DATES: *Effective Date:* Effective October 9, 2007.

FOR FURTHER INFORMATION CONTACT: Christopher Spinney, Aerospace Engineer, Engine Certification Office, FAA, Engine and Propeller Directorate, 12 New England Executive Park, Burlington, MA 01803; telephone (781) 238–7175; fax (781) 238–7199.

SUPPLEMENTARY INFORMATION: On September 21, 2007 (72 FR 53937), we published a final rule AD, FR Doc. E7–18484, in the **Federal Register**. That AD applies to Turbomeca S.A. Artouste III B, Artouste III B1, and Artouste III D turboshaft engines. We need to make the following corrections:

On page 53937, in the second column, in the Supplementary Information

paragraph, in the third line, ''2005–04–15'' is corrected to read ''2006–04–15''.

On page 53938, in the first column, in the second line, ''2005–04–15'' is corrected to read ''2006–04–15''.

§ 39.13 [Corrected]

■ On page 53938, in the third column, in paragraph (b), in the first line, ''2005–04–15'' is corrected to read ''2006–04–15''.

Issued in Burlington, Massachusetts, on October 1, 2007.

Peter A. White,

Acting Manager, Engine and Propeller Directorate, Aircraft Certification Service.

[FR Doc. E7–19686 Filed 10–5–07; 8:45 am]

BILLING CODE 4910–13–P

DEPARTMENT OF TRANSPORTATION

Federal Aviation Administration

14 CFR Parts 91, 119, 121, and 135

[Docket No. FAA–2006–24260]

Exemptions for Passenger Carrying Operations Conducted for Compensation and Hire in Other Than Standard Category Aircraft

AGENCY: Federal Aviation Administration (FAA), DOT.

ACTION: Notice of policy statement.

SUMMARY: This document identifies and provides guidance on the current FAA policies regarding requests for exemption from the rules governing the operation of aircraft for the purpose of carrying passengers on living history flights in return for compensation. Specifically, this document clarifies which aircraft are potentially eligible for an exemption and what type of information petitioners should submit to the FAA for proper consideration of relief from the applicable regulations.

DATES: This policy becomes effective on October 9, 2007.

FOR FURTHER INFORMATION CONTACT: General Aviation and Commercial Division, Certification and General Aviation Operations Branch (AFS–810), Flight Standards Service, FAA, 800 Independence Avenue, SW., Washington, DC 20591; telephone (202) 267–8212.

SUPPLEMENTARY INFORMATION:

Background

In 1996, the FAA granted an exemption from various requirements of part 91 and part 119 to an aviation museum/foundation allowing the exemption holder to operate a large, crew-served, piston-powered, multiengine, World War II (WWII) bomber carrying passengers for the purpose of preserving U.S. military aviation history. In return for donations, the contributors would receive a local flight in the restored bomber.

The petitioner noted that WWII combat aircraft are unique in that only a limited number remain in flyable condition, and that number is declining with the passage of time. In addition, the petitioner noted replacement parts and the specific gasoline used by these airplanes will eventually be in short supply, and may substantially reduce the aircraft performance capability or require the airplanes to be grounded.

The petitioner indicated that compensation would be collected to help cover expenses associated with maintaining and operating the WWII airplane. Without these contributions, the petitioner asserted that the cost of operating and maintaining the airplane would be prohibitive.

The FAA determined that these airplanes were operated under a limited category airworthiness certificate. Without type certification under Title 14 Code of Federal Regulations (14 CFR) § 21.27, they are not eligible for standard airworthiness certificates. The high cost of type certification under § 21.27 makes this avenue impractical for operators providing living history flights. Comparable airplanes manufactured under a standard airworthiness certificate did not exist. As a result, the FAA determined that an exemption was an appropriate way to preserve aviation history and keep the airplanes operational. In granting the exemption, the FAA found that there was an overwhelming public interest in preserving U.S. aviation history, just as the preservation of historic buildings, historic landmarks, and historic neighborhoods have been determined to be in the public interest. While aviation history can be represented in static displays in museums, in the same way historic landmarks could be represented in a museum, the public has shown support for and a desire to have these historic aircraft maintained and operated to allow them to experience a flight.

Since the issuance of that exemption, the FAA has received many exemption requests seeking the same or similar relief, even though the particular circumstances were different. These subsequent petitions raised significant concerns within the FAA and led it to reexamine and refine its criteria for issuing exemptions.

For example, petitioners have requested exemptions to operate certain large turbojet-powered aircraft, which included a foreign-manufactured and operated, surplus military turbojet aircraft. Some turbojet-powered aircraft (L–29, L–39, TS–11, Alfa Jet, etc.) remain in active military service or are readily available in the current international market. The availability of these aircraft is indicative of an increasing market and thus undermines any argument that this aircraft meets the public interest goal of preserving unique, historical aircraft. Additionally, the FAA was concerned that petitioners could not demonstrate that these aircraft had been adequately maintained. Unlike foreign manufactured military surplus aircraft, operators of U.S.-manufactured surplus military aircraft certificated in an airworthiness category (experimental, limited, and restricted category under § 21.25(a)(2)) for which no common standards exist, were required to avoid potential safety issues through (1) the continued operation and maintenance requirements imposed on them, and (2) a requirement to provide adequate documentation of previous operational maintenance history.

As a result of these requests, the FAA published a draft policy notice in the **Federal Register** on March 27, 2006 (71 FR 15087) (Docket number FAA–2006–24260) clarifying its position regarding the issuance of exemptions for passenger carrying operations conducted for compensation and hire in other than standard category aircraft. Two comments were forwarded to the docket for consideration. The first was submitted by individuals who serve as volunteers at the Wright B Flyer Museum. These individuals generally supported the proposal, but asked that it be expanded to include experimental amateur built aircraft, such as their Wright B Flyer replica. Item 1 below (under FAA Policy section) states, ''Aircraft holding any category of airworthiness certificate issued under 14 CFR part 21 may be considered for an exemption to provide living history flight experiences.'' This would include the Wright B Replica.

The other comment, submitted by the Experimental Aircraft Association, addressed several issues. The first issue addressed typographical errors in the numbering sequence of the paragraphs that appeared in the draft notice. The errors were numbering errors and not missing information. They have been corrected. Second, EAA spoke to concerns regarding the revision of operating limitations. EAA states that the current wording of proposed paragraph 10 could lead to the possibility of revised operating limitations exceeding the scope of this proposed policy. This was not the

FAA's intention. Instead, the FAA simply wished to convey the possibility that any exemption may contain operational restrictions beyond what appears in the aircraft's operating limitations. The third recommends adding a paragraph to state that operators with existing exemptions may continue to conduct passenger-carrying operations per those conditions and limitations and that all requirements of this policy would be complied with at their next exemption renewal period. The addition is not necessary. Existing exemptions comply with the policy. Also, we must always reserve the right to revise any existing exemption and its conditions and limitations should a safety need arise.

As a result of ongoing communication with the stakeholder community, the following establishes the FAA's policy regarding the issuance of exemptions for passenger-carrying operations conducted for compensation and hire in other than standard category aircraft.

FAA Policy

The FAA recognizes the need for and seeks to promote an exposure to and appreciation of aviation history. By enabling non-profit organizations, identified as such by the U.S. Department of Treasury, to offer living history flights for compensation used to preserve and maintain these aircraft, the public will be assured access to this important part of history.

The regulations in 14 CFR establish appropriate safety standards for aircraft operators and crewmembers. Therefore, an exemption from aviation safety regulations is not routinely granted if the proposed operation can be performed in full compliance with the rules. In addition, the FAA must be persuaded that operation of the affected aircraft will not pose an undue risk to the flying public or to bystanders. The use of former military turbine-engine powered aircraft, in particular, raises several concerns with respect to the type and quality of training available for the flightcrews and maintenance and inspection personnel. Some of the aircraft are complex in nature and some require special skills to operate safely. In addition, there is risk to aircraft occupants, ground personnel, and spectators when military equipment like ejection seat systems, which use armed, explosive pyrotechnic devices, are installed and operational.

The FAA notes that in order to ensure that adequate consideration is given to petitioners intending to operate experimental exhibition, surplus foreign or domestic, turbojet or turbine-powered aircraft, the FAA will closely examine the proposed operation with respect to safety of flight, passenger safety considerations, and safety of the non-participating public during the operational period and within the operational area. Passenger/flightcrew egress, emergency egress systems such as ejection seats, documentation or statistical make and model operational history, significance of the particular aircraft with respect to the operational history maintenance history, operational failure modes, and aging aircraft factors of individual aircraft will be taken into consideration in the analysis of an exemption request.

The FAA will not automatically exclude any request for exemption for non-standard category aircraft from consideration unless the aircraft was acquired through an Act of Congress and Congress has specified that the aircraft may not be operated for compensation or hire.[1] Rather, the FAA will evaluate each exemption request on a case-by-case basis. Those requesting an exemption from a particular standard or set of standards must demonstrate the following: (1) That there is an overriding public interest in providing a financial means for a non-profit organization to continue to preserve and operate these historic aircraft, and (2) that adequate measures will be taken to ensure safety.

In order to allow the FAA to thoroughly evaluate and provide consideration to each request, petitioners should allow at least 120 days for processing and review of any exemption requests.

The FAA will use the following criteria in deciding whether granting an exemption is in the public interest and does not compromise safety:

1. Aircraft holding any category of airworthiness certificate issued under 14 CFR part 21 may be considered for an exemption to provide living history flight experiences.

2. Exemptions will not be limited to a particular category of aircraft or based on a type of engine; fixed wing or rotorcraft may apply as well as piston or turbine powered aircraft.

3. An aircraft that was not made by a U.S. manufacturer may be considered for an exemption if the operational and maintenance history is adequately documented.

4. Aircraft with crew egress systems will be considered, provided that flightcrew, ground personnel, and passengers have completed a training program approved by the FAA. Passenger training programs must be at least as thorough as what is provided by the manufacturer or military service user when preparing an individual for a ''familiarization'' flight.

5. Aircraft of the same or similar make/model/series cannot be in current production or in significant commercial use for the carriage of passengers. Exceptions may be considered where a particular airframe has documented historical significance.

6. All passenger seats and their installation must:

a. Take into consideration passenger egress in the event of an emergency; and be FAA-approved if installed on type-certificated aircraft; or

b. Meet the military seat and installation standards or equivalent standards in existence at the time the aircraft was manufactured as outlined in 14 CFR 21.27 if installed on experimental aircraft The Flight Standards District Office (FSDO) having oversight for that aircraft will then ensure the approved maintenance program is modified to incorporate the specific seat inspection procedures.

7. Exemptions will be issued for the sole purpose of providing living history flights to promote aviation and preserve historic aircraft. The operations authorized under these exemptions are specifically not air tour, sightseeing, or air carrier operations. The FAA may stipulate conditions and limitations to the operation to preserve commonality and standardization.

8. The FAA, in determining the public interest derived in any grant of exemption of this nature, will take into consideration the number of existing operational aircraft and petitioners available to provide the historic service to the public.

9. The FAA must be provided with proof that the petitioner is a tax-exempt museum or foundation, recognized as such by the U.S. Department of Treasury, which uses the funds received from exhibitions to enable the continued display of the featured aircraft. The aircraft must be under the operational control of the petitioner.

10. Applicants may be required to submit an operational history of the make/model/type aircraft, or justification with respect to aviation history in order for the FAA to determine the public interest basis for granting an exemption.

11. If a petition for exemption is granted, the conditions and limitations may include revised operating limitations as part of the aircraft's airworthiness certificate. These operating limitations may be more

[1] In the event an exemption is mistakenly granted for such an aircraft, the exemption shall be void and the FAA may take enforcement action against the operator at any time.

restrictive than those originally issued to the aircraft.

12. Passengers must obtain a complete briefing prior to departure that adequately describes the differences between aircraft with a standard airworthiness certificate and aircraft holding either an experimental or limited airworthiness certificate (i.e., the FAA has not participated in or accepted the design standards, performance standards, handling qualities, or provided approval or operational acceptance of experimental aircraft, the adequacy of previous maintenance and inspection programs and accomplishment may be in doubt, that the aircraft may not comply with FAA passenger regulations and may be operated under separate maintenance standards). The briefing must also advise that the FAA considers flights in these aircraft to pose a greater public risk than similar activities conducted in standard category aircraft and has approved this exemption on the condition that the passengers taking this flight be apprised of the risks involved in flying in such aircraft and be properly trained in emergency exiting, including proper use of the ejection seat. Petitioners must prepare a ''notice'' for signature by the potential passenger. While a notice does not absolve the operator of liability in the event of an accident, the document will provide proof that the passenger has been advised of the risks inherent in the type of operation to be conducted.

13. Crew Qualification and Training.

a. Pilots must possess a minimum of a commercial pilot certificate with instrument rating appropriate to the category and class of aircraft to be flown. They must also hold a type rating if required by the type of aircraft flown along with a current second class medical certificate.

b. Initial and recurrent training must be performed to current ATP Practical Test Standards for aircraft requiring a special authorization or type rating to operate.

c. An initial ground and flight-training program must be developed by the organization and completed by all pilots.

d. Recurrent ground training must be developed and completed by all pilots on an annual cycle.

e. An annual proficiency check must be conducted and if necessary, recurrent flight training will be required. A minimum activity level and satisfactory flight proficiency check may allow the requirement for recurrent flight training to be waived.

f. The minimum flight experience required for each pilot position may be recommended by the petitioner but must be approved by the FAA.

g. Pilots will maintain takeoff and landing currency in each make and model.

h. A system for documenting and recording all crew qualifications, required training, checking and currency must be developed and maintained.

i. All training and checking programs must be approved by the FAA.

14. Maintenance/Inspection of Aircraft.

a. The maintenance history of each individual aircraft must be provided.

b. The petitioner must provide an FAA-approved maintenance/inspection program that may be a program based on military and/or original manufacturer's manuals and must be in accordance with the type certification data sheet and the aircraft's operating limitations.

c. All maintenance and inspections will be documented and recorded.

d. Applicants may be required to submit an operational history of the make/model/type in order for the FAA to verify that the submitted maintenance/inspection program is adequate.

15. All maintenance or operational incidents will be reported to the FSDO in whose district the organization's principal base of operations is located.

16. Passenger Safety and Training.

a. An FAA-approved passenger briefing must be conducted appropriate to the scope of operations. Passengers must be fully informed of the risks associated with the proposed rides, and that occupying a seat in these aircraft may subject the rider to a high level of risk. Some operations may require passenger-briefing cards.

b. The passenger briefing must include emergency egress procedures and passenger seating and safety restraint systems.

c. Passenger training equivalent to that provided for Department of Defense familiarization flights must be approved by the FAA and conducted for all flights involving any of the following:

i. Ejection seats, if the aircraft is so equipped;

ii. High altitude operations, if flight will be conducted above 10,000 feet mean sea level (MSL);

iii. Oxygen system, for flights above 10,000 feet MSL or if use of the system is required by type of operation.

Petitioners who have not previously conducted operations of this type may be required to demonstrate their ability to safely perform the operations requested and to meet all operating and maintenance requirements. The extent of this demonstration will be dependent on the scope of the operation requested. Petitioners who have conducted this type of operation must provide a summary of their operating history.

Additionally, all petitioners will be required to submit documentation sufficient to allow the FAA to determine the number of passenger seats to be utilized during compensated operations and the FAA approval status of those seats. Petitioners will also be required to provide the U.S. registration number and make/model/serial number of the aircraft to be used.

Those submitting petitions for exemption or additional information should submit the required information to the following: (1) For paper submissions, send the original signed copy of your submission to the U.S. Department of Transportation, Docket Management System, 1200 New Jersey Avenue, SE., West Building Ground Floor, Room W12–140, Washington, DC 20590 or (2) for electronic submissions, submit your information to the FAA through the Internet using the Federal Docket Management System Web site at this Internet address: *http://www.regulations.gov.* Follow the online instructions for accessing the dockets. If you already have received a docket number, you must reference that docket number in your request.

Issued in Washington, DC, on October 2, 2007.

James J. Ballough,

Director, Flight Standards Service.

[FR Doc. E7–19846 Filed 10–5–07; 8:45 am]

BILLING CODE 4910–13–P

DEPARTMENT OF COMMERCE

Office of the Secretary

15 CFR Parts 19, 21 and 22

[Docket Number: 070216039–7495–02]

RIN 0605–AA24

Commerce Debt Collection

AGENCY: Office of the Chief Financial Officer and Assistant Secretary for Administration, Department of Commerce.

ACTION: Final rule.

SUMMARY: This rule adopts as final the revised Department of Commerce (Commerce Department or Commerce) debt collection regulations to conform to the Debt Collection Improvement Act of 1996, the revised Federal Claims Collection Standards, and other laws applicable to the collection of non-tax debts owed to the Commerce Department. This rule also adopts as

final Commerce's regulations governing the offset of Commerce-issued payments to collect debts owed to other Federal agencies.

DATES: This rule is effective October 9, 2007.

FOR FURTHER INFORMATION CONTACT: Lisa Casias, Deputy Chief Financial Officer and Director for Financial Management, Office of Financial Management, at (202) 482–1207, Department of Commerce, 1401 Constitution Avenue, NW., Room 6827, Washington, DC 20230. This document is available for downloading from the Department of Commerce, Office of Financial Management's Web site at the following address: *http://osec.doc.gov/ofm/OFM%20Publications.htm.*

SUPPLEMENTARY INFORMATION:

Background

This rule revises and replaces Department of Commerce debt collection regulations found at 15 CFR Parts 19, 21 and 22 to conform to the Debt Collection Improvement Act of 1996 (DCIA), Public Law 104–134, 110 Stat. 1321, 1358 (Apr. 26, 1996), the revised Federal Claims Collection Standards, 31 CFR Chapter IX (Parts 900 through 904), and other laws applicable to the collection of non-tax debt owed to the Government. The Department of Commerce made additions and revisions to 15 CFR Part 19, and deleted 15 CFR Parts 21 and 22 to consolidate and streamline the debt collection regulations.

This regulation provides procedures for the collection of non-tax debts owed to Commerce Department entities. Commerce adopts the Government-wide debt collection standards promulgated by the Departments of the Treasury and Justice, known as the Federal Claims Collection Standards (FCCS), as revised on November 22, 2000 (65 FR 70390), and supplements the FCCS by prescribing procedures consistent with the FCCS, as necessary and appropriate for Commerce operations. This regulation also provides the procedures for the collection of debts owed to other Federal agencies when a request for offset is received by Commerce.

This regulation does not contain a section regarding the delegation of debt collection authority within the Commerce Department. The delegation is contained in the Department of Commerce Credit and Debt Management Operating Procedures Handbook (currently available at *http://www.osec.doc.gov/ofm/credit/cover.htm*), and does not need to be included in the regulation.

Nothing in this regulation precludes the use of collection remedies not contained in this regulation. For example, Commerce entities may collect unused travel advances through offset of an employee's pay under 5 U.S.C. 5705. Commerce entities and other Federal agencies may simultaneously use multiple collection remedies to collect a debt, except as prohibited by law.

Commerce entities may, but are not required to, promulgate additional policies and procedures consistent with this regulation, the FCCS, and other applicable Federal laws, policies, and procedures, subject to the approval of the Deputy Chief Financial Officer.

Section Analysis

The Department of Commerce published the Interim final rule with request for comments on April 16, 2007 at 72 FR 18869. No comments were received. For section analysis of this final rule, see 72 FR 18869 on April 16, 2007.

Regulatory Analysis

E.O. 12866, Regulatory Review

This rule is not a significant regulatory action as defined in Executive Order 12866.

Regulatory Flexibility Act

Because notice of proposed rulemaking and opportunity for comment are not required pursuant to 5 U.S.C. 553, or any other law, the analytical requirements of the Regulatory Flexibility act (5 U.S.C. 601, *et seq.*) are inapplicable. Therefore, a regulatory flexibility analysis is not required and has not been prepared.

List of Subjects in 15 CFR Part 19

Administrative practice and procedure, Claims, Debts, Garnishment of wages, Government employee, Hearing and appeal procedures, Pay administration, Salaries, Wages.

Authority and Issuance

■ Accordingly, the interim final rule amending 15 CFR part 19 and removing 15 CFR parts 21 and 22 which was published at 72 FR 18869 on April 16, 2007, is adopted as a final rule without change.

Dated: October 1, 2007.

Lisa Casias,

Deputy Chief Financial Officer and Director for Financial Management, Department of Commerce.

[FR Doc. E7–19755 Filed 10–5–07; 8:45 am]

BILLING CODE 3510–FA–P

DEPARTMENT OF HEALTH AND HUMAN SERVICES

Food and Drug Administration

21 CFR Parts 516 and 556

New Animal Drugs; Florfenicol

AGENCY: Food and Drug Administration, HHS.

ACTION: Final rule.

SUMMARY: The Food and Drug Administration (FDA) is amending the animal drug regulations to reflect conditional approval of an application for conditional approval of a new animal drug intended for a minor species filed by Schering-Plough Animal Health Corp. The application seeks conditional approval of the use of florfenicol by veterinary feed directive for the control of mortality in catfish due to columnaris disease associated with *Flavobacterium columnare*.

DATES: This rule is effective October 9, 2007.

FOR FURTHER INFORMATION CONTACT: Joan C. Gotthardt, Center for Veterinary Medicine (HFV–130), Food and Drug Administration, 7500 Standish Pl., Rockville, MD 20855, 301–827–7571, e-mail: *joan.gotthardt@fda.hhs.gov*.

SUPPLEMENTARY INFORMATION: Schering-Plough Animal Health Corp., 556 Morris Ave., Summit, NJ 07901, filed an application for conditional approval (141–259) that provides for the use of AQUAFLOR-CA1 (florfenicol), a Type A medicated article, by veterinary feed directive to formulate Type C medicated feed for the control of mortality in catfish due to columnaris disease associated with *Flavobacterium columnare*. In accordance with the Federal Food, Drug, and Cosmetic Act (the act), as amended by the Minor Use and Minor Species Animal Health Act of 2004 (MUMS Act), this drug is conditionally approved as of April 13, 2007, and the regulations are amended by adding 21 CFR 516.1215 and by revising 21 CFR 556.283 to reflect the conditional approval of this application. The effect of this final rule is delayed until October 9, 2007, pending establishment of part 516 (72 FR 41010, July 26, 2007).

In accordance with the freedom of information provisions of 21 CFR part 20, a summary of safety and effectiveness data and information submitted to support conditional approval of this application for conditional approval may be seen in the Division of Dockets Management (HFA–305), Food and Drug Administration, 5630 Fishers Lane, rm. 1061, Rockville,

MD 20852, between 9 a.m. and 4 p.m., Monday through Friday.

AQUAFLOR-CA1 in the dosage form and for the intended uses conditionally approved by FDA under application number 141–259 qualifies for 7 years of exclusive marketing rights beginning on the date of approval. This new animal drug qualifies for exclusive marketing rights under section 573(c) of the act (21 U.S.C. 360ccc-2(c)) because it has been declared a designated new animal drug by FDA under section 573(a) of the act.

FDA has determined under 21 CFR 25.33(d)(4) that this action is of a type that does not individually or cumulatively have a significant effect on the human environment. Therefore, neither an environmental assessment nor an environmental impact statement is required.

This rule does not meet the definition of ''rule'' in 5 U.S.C. 804(3)(A) because it is a rule of ''particular applicability.'' Therefore, it is not subject to the congressional review requirements in 5 U.S.C. 801–808.

List of Subjects

21 CFR Part 516

Administrative practice and procedure, Animal drugs, Confidential business information, Reporting and recordkeeping requirements.

21 CFR Part 556

Animal drugs, Foods.

■ Therefore, under the Federal Food, Drug, and Cosmetic Act and under authority delegated to the Commissioner of Food and Drugs and redelegated to the Center for Veterinary Medicine, 21 CFR parts 516 and 556 are amended as follows:

PART 516—NEW ANIMAL DRUGS FOR MINOR USE AND MINOR SPECIES

■ 1. The authority citation for 21 CFR part 516 continues to read as follows:

Authority: 21 U.S.C. 360ccc–2, 371.

■ 2. Add subpart E to read as follows:

Subpart E—Conditionally Approved New Animal Drugs For Minor Use and Minor Species

§ 516.1215 Florfenicol.

(a) *Specifications.* Type A medicated article containing 500 grams (g) florfenicol per kilogram.

(b) *Sponsor.* See No. 000061 in § 510.600(c) of this chapter.

(c) *Special considerations.* Labeling shall bear the following: ''Conditionally approved by FDA pending a full demonstration of effectiveness under application number 141–259. Extra-label use of this drug in or on animal feed is strictly prohibited.''

(d) *Related tolerances.* See § 556.283 of this chapter.

(e) *Conditions of use*—(1) *Catfish*—(i) *Amount.* Feed 182 to 1816 g florfenicol per ton of feed as a sole ration for 10 consecutive days to deliver 10 milligrams florfenicol per kilogram of fish.

(ii) *Indications for use.* For the control of mortality due to columnaris disease associated with *Flavobacterium columnare.*

(iii) *Limitations.* Feed containing florfenicol shall not be fed to catfish for more than 10 days. Following administration, fish should be reevaluated by a licensed veterinarian before initiating a further course of therapy. A dose-related decrease in hematopoietic/lymphopoietic tissue may occur. The time required for hematopoietic/lymphopoietic tissues to regenerate was not evaluated. The effects of florfenicol on reproductive performance have not been determined. Feeds containing florfenicol must be withdrawn 12 days prior to slaughter. Federal law limits this drug to use under the professional supervision of a licensed veterinarian. The expiration date of veterinary feed directives (VFDs) for florfenicol must not exceed 15 days from the date of prescribing. VFDs for florfenicol shall not be refilled. See § 558.6 of this chapter for additional requirements.

(2) [Reserved]

PART 556—TOLERANCES FOR RESIDUES OF NEW ANIMAL DRUGS IN FOOD

■ 3. The authority citation for 21 CFR part 556 continues to read as follows:

Authority: 21 U.S.C. 342, 360b, 371.

■ 4. In § 556.283, revise paragraph (c) to read as follows:

§ 556.283 Florfenicol.

* * * * *

(c) *Related conditions of use.* See §§ 516.1215, 520.955, 522.955, and 558.261 of this chapter.

Dated: September 27, 2007.

Bernadette Dunham,

Deputy Director, Center for Veterinary Medicine.

[FR Doc. E7–19853 Filed 10–5–07; 8:45 am]

BILLING CODE 4160–01–S

DEPARTMENT OF HOMELAND SECURITY

Coast Guard

33 CFR Part 165

[COTP MIAMI 07–142]

RIN 1625–AA00

Safety Zone; Monthly Biscayne Bay Yacht Racing Association Cruising Races, Biscayne Bay, Miami, FL

AGENCY: Coast Guard, DHS.

ACTION: Temporary final rule.

SUMMARY: The Coast Guard is establishing a temporary safety zone for the Monthly Biscayne Bay Yacht Racing Association (BBYRA) Cruising Races, which will temporarily limit the movement of non-participant vessels in Biscayne Bay near Miami, FL. This temporary safety zone is intended to restrict vessels from entering the waters where the event will be held unless specifically authorized by the Captain of the Port, Miami, Florida or his designated representative. This regulation is needed to protect the safety of participants, marine spectators and recreational and professional mariner traffic.

DATES: This rule is effective from 11 a.m. until 4 p.m. each day on Saturday, September 8, 2007 and Sunday, October 14, 2007.

ADDRESSES: Comments and material received from the public, as well as documents indicated in this preamble as being available in the docket are part of docket COTP MIAMI 07–142 and are available for inspection or copying at Sector Miami, 100 MacArthur Causeway, Miami Beach, Fl 33139 between 8 a.m. and 4 p.m., Monday through Friday, except Federal holidays.

FOR FURTHER INFORMATION CONTACT: MSTCS R. Johnson, Coast Guard Sector Miami, Florida, at (305) 535–4317.

SUPPLEMENTARY INFORMATION:

Regulatory Information

We did not publish a notice of proposed rulemaking (NPRM) for this regulation. Under 5 U.S.C. 553(b)(B), the Coast Guard finds that good cause exists for not publishing an NPRM. Notice of these events was not provided to the Coast Guard with sufficient time to publish an NPRM and receive public comment before the event dates. This temporary rule is necessary to ensure the safety of participants, spectators, and the general public from the hazards associated with a boat race.

For the same reasons, the Coast Guard also finds, under 5 U.S.C. (d)(3), that

good cause exists for making this rule effective less than 30 days after publication in the **Federal Register**.

Background and Purpose

The Biscayne Bay Yacht Racing Association is sponsoring the Monthly BBYRA Cruising Races, and approximately 35 sailboats, 20 to 54 feet in the length, are expected to participate. The event will be held each day from 11 a.m. until 4 p.m. on September 8, 2007 and October 14, 2007. The public is invited to attend. The high concentration of event participants, spectators, and the general boating public presents an extra hazard to the safety of life on the navigable waters of the United States. A temporary safety zone encompassing the waters in Biscayne Bay & the Intracoastal Waterway is necessary to protect participants as well as spectators from hazards associated with the event.

Discussion of Rule

This rule establishes a temporary safety zone for the Monthly BBYRA Cruising Races in Biscayne Bay near Miami, FL. The safety zone is 100 yards around all race participants as they transit the waters of Biscayne Bay south of the Rickenbaucker Causeway to Latitude 25°32′00″. Vessels are prohibited from anchoring, mooring, or transiting within these zones, unless authorized by the Captain of the Port, Miami, Florida, or his designated representative. If the Coast Guard Patrol Commander determines that it is safe for vessels to transit the regulated area, vessels may proceed through the regulated area between scheduled racing events. A succession of not fewer that 5 short whistle or horn blasts from a Coast Guard patrol vessel will be the signal for any and all vessels within the regulated area to take immediate steps to avoid collision. Traffic may resume normal operations at the completion of the scheduled races and exhibitions as determined by the Coast Guard Patrol Commander. The temporary safety zone will protect the participants and the public from the dangers associated with the event. This regulation is effective each day from 11 a.m. until 4 p.m. on September 8, 2007 and October 14, 2007.

Regulatory Evaluation

This rule is not a ''significant regulatory action'' under section 3(f) of Executive Order 12866, Regulatory Planning and Review, and does not require an assessment of potential costs and benefits under section 6(a)(3) of that Order. The Office of Management and Budget has not reviewed it under that Order.

We expect the economic impact of this rule to be so minimal that a full Regulatory Evaluation is unnecessary. Entry into the regulated area is prohibited for only limited time periods, and all vessels should be able to safety transit around the regulated area at all times. If the Coast Guard Patrol Commander determines that it is safe for vessels to transit the regulated area, vessels may proceed through the regulated area between scheduled racing events. Traffic may resume normal operations at the completion of scheduled races and exhibitions as determined by the Coast Guard Patrol Commander. Finally, advance notifications to the maritime community through marine information broadcasts will allow mariners to adjust their plans accordingly.

Small Entities

Under the Regulatory Flexibility Act (5 U.S.C. 601–612), we have considered whether this rule would have a significant economic impact on a substantial number of small entities. The term ''small entities'' comprises small businesses, not-for-profit organizations that are independently owned and operated and are not dominant in their fields, and governmental jurisdictions with populations of less than 50,000.

The Coast Guard certifies under 5 U.S.C. 605(b) that this rule will not have a significant economic impact on a substantial number of small entities. This rule will affect the following entities, some of which may be small entities: The owners or operators of vessels intending to transit or anchor in the waters of Biscayne Bay during the effective period. This temporary safety zone will not have a significant economic impact on a substantial number of small entities for the following reasons. This rule will be in effect for only 5.0 hours during the day, vessel traffic may safely pass around the safety zone, and vessels may pass through the regulated area with the permission of the Coast Guard Patrol Commander.

Assistance for Small Entities

Under section 213(a) of the Small Business Regulatory Enforcement Fairness Act of 1996 (Pub. L. 104–121), we want to assist small entities in understanding the rule so that they could better evaluate its effects on them and participate in the rulemaking process.

Small businesses may send comments on the actions of Federal employees who enforce, or otherwise determine compliance with, Federal regulations to the Small Business and Agriculture Regulatory Enforcement Ombudsman and the Regional Small Business Regulatory Fairness Boards. The Ombudsman evaluates these actions annually and rates each agency's responsiveness to small business. If you wish to comment on actions by employees of the Coast Guard, call 1–888–REG–FAIR (1–888–734–3247).

Collection of Information

This rule calls for no new collection of information under the Paperwork Reduction Act of 1995 (44 U.S.C. 3501–3520).

Federalism

A rule has implications for federalism under Executive Order 13132, Federalism, if it has a substantial direct effect on State or local governments and would either preempt State law or impose a substantial direct cost of compliance on them. We have analyzed this rule under that Order and have determined that it does not have implications for federalism.

Unfunded Mandates Reform Act

The Unfunded Mandates Reform Act of 1995 (2 U.S.C. 1531–1538) requires Federal agencies to assess the effects of their discretionary regulatory actions. In particular, the Act addresses actions that may result in the expenditure by a State, local, or tribal government, in the aggregate, or by the private sector of $100,000,000 or more in any one year. Though this rule will not result in such an expenditure, we do discuss the effects of this rule elsewhere in this preamble.

Taking of Private Property

This rule will not affect a taking of private property or otherwise have taking implications under Executive Order 12630, Governmental Actions and Interference with Constitutionally Protected Property Rights.

Civil Justice Reform

This rule meets applicable standards in sections 3(a) and 3(b)(2) of Executive Order 12988, Civil Justice Reform, to minimize litigation, eliminate ambiguity, and reduce burden.

Protection of Children

We have analyzed this rule under Executive Order 13045, Protection of Children from Environmental Health Risks and Safety Risks. This rule is not an economically significant rule and does not create an environmental risk to

health or risk to safety that may disproportionately affect children.

Indian Tribal Governments

This rule does not have tribal implications under Executive Order 13175, Consultation and Coordination with Indian Tribal Governments, because it does not have a substantial direct effect on one or more Indian tribes, on the relationship between the Federal Government and Indian tribes, or on the distribution of power and responsibilities between the Federal Government and Indian tribes.

Energy Effects

We have analyzed this rule under Executive Order 13211, Actions Concerning Regulations That Significantly Affect Energy Supply, Distribution, or Use. We have determined that it is not a ''significant energy action'' under that order, because it is not a ''significant regulatory action'' under Executive Order 12866 and is not likely to have a significant adverse effect on the supply, distribution, or use of energy. The Administrator of the Office of Information and Regulatory Affairs has not designated it as a significant energy action. Therefore, it does not require a Statement of Energy Effects under Executive Order 13211.

Technical Standards

The National Technology Transfer and Advancement Act (NTTAA) (15 U.S.C. 272 note) directs agencies to use voluntary consensus standards in their regulatory activities unless the agency provides Congress, through the Office of Management and Budget, with an explanation of why using these standards would be inconsistent with applicable law or otherwise impractical. Voluntary consensus standards are technical standards (*e.g.*, specifications of materials, performance, design, or operation; test methods; sampling procedures; and related management systems practices) that are developed or adopted by voluntary consensus standards bodies.

This rule does not use technical standards. Therefore, we did not consider the use of voluntary consensus standards.

Environment

We have analyzed this rule under Commandant Instruction M16475.lD, which guides the Coast Guard in complying with the National Environmental Policy Act of 1969 (NEPA)(42 U.S.C. 4321–4370f), and have concluded that there are no factors in this case that would limit the use of a categorical exclusion under section 2.B.2 of the Instruction. Therefore, this rule is categorically excluded, under figure 2–1, paragraph (34)(g), of the Instruction, from further environmental documentation. A final ''Environmental Analysis Check List'' and a final ''Categorical Exclusion Determination'' will be available in the docket where indicated under **ADDRESSES**.

List of Subjects in 33 CFR Part 165

Harbors, Marine Safety, Navigation (water), Reporting and recordkeeping requirements, Security Measures, Waterways.

■ For the reasons discussed in the preamble, the Coast Guard amends 33 CFR part 165 as follows:

PART 165–REGULATED NAVIGATION AREAS AND LIMITED ACCESS AREAS

■ 1. The authority citation for part 165 continues to read as follows:

Authority: 33 U.S.C. 1226, 1231; 46 U.S.C. Chapter 701; 50 U.S.C. 191, 195; 33 CFR 1.05–1, 6.04–1, 6.04–6 and 160.5; Pub. L. 107–295, 116 Stat. 2064; Department of Homeland Security Delegation No. 0170.1.

■ 2. Add temporary § 165.T07–142 to read as follows:

§ 165.T07–142 Safety Zone: Monthly Biscayne Bay Yacht Racing Association Cruising Races; Biscayne Bay, Miami, FL.

(a) *Location.* The following area is a safety zone: All waters within 100 yards around all participants in the BBYRA Cruising Races as they transit the waters of Biscayne Bay south of the Rickenbaucker Causeway to Latitude 25°32′00″.

(b) *Definition.* The following definition applies to this section:

Designated representative is a Coast Guard Patrol Commander, including Coast Guard coxswains, petty officers and other officers operating Coast Guard vessels, and federal, state, and local officers designated by or assisting the Captain of the Port of Miami in restricting vessels and persons from entering the temporary safety zone.

(c) *Regulations.* (1) In accordance with the general regulations in § 165.23 of this part, no person or vessel may anchor, moor or transit a safety zone without permission of the Captain of the Port Sector Miami or his designated representative. To request permission to enter into a safety zone, the designated representative may be contacted on VHF channel 16.

(2) At the completion of scheduled races and exhibitions, and departure of participants from the area, the Coast Guard Patrol Commander may permit traffic to resume normal operations.

(3) Between scheduled events, the Coast Guard Patrol Commander may permit traffic to resume normal operations for a limited time.

(4) A succession of not fewer than 5 short whistle or horn blasts from a Coast Guard patrol vessel will be the signal for any and all vessels within the safety zone defined in paragraph (a) to take immediate steps to avoid collision.

(d) *Effective Dates.* This rule is effective each day from 11 a.m. to 4 p.m. on Saturday, September 8, 2007 and on Sunday, October 14, 2007.

Dated: September 7, 2007.

K.L. Schultz,

Captain, U.S. Coast Guard, Captain of the Port Miami, FL.

[FR Doc. E7–19744 Filed 10–5–07; 8:45 am]

BILLING CODE 4910–15–P

ENVIRONMENTAL PROTECTION AGENCY

40 CFR Part 52

[EPA–R04–OAR–2007–0251–200738; FRL–8478–6]

Approval and Promulgation of Implementation Plans; Georgia; Clean Air Interstate Rule

AGENCY: Environmental Protection Agency (EPA).

ACTION: Final rule.

SUMMARY: EPA is taking final action to approve a revision to the Georgia State Implementation Plan (SIP) submitted on March 28, 2007. This revision addresses the requirements of EPA's Clean Air Interstate Rule (CAIR) promulgated on May 12, 2005, and subsequently revised on April 28, 2006, and December 13, 2006. EPA has determined that the SIP revision fully implements the CAIR requirements for Georgia. As a result of this action, EPA will also withdraw, through a separate rulemaking, the CAIR Federal Implementation Plans (FIPs) concerning sulfur dioxide (SO_2), and nitrogen oxides (NO_X annual) season emissions for Georgia. The CAIR FIPs for all States in the CAIR region were promulgated on April 28, 2006, and subsequently revised on December 13, 2006.

CAIR requires States to reduce emissions of SO_2 and NO_X that significantly contribute to, and interfere with maintenance of, the National Ambient Air Quality Standards (NAAQS) for fine particulates ($PM_{2.5}$) and/or ozone in any downwind state. CAIR establishes State budgets for SO_2 and NO_X and requires States to submit SIP revisions that implement these

budgets in States that EPA concluded did contribute to nonattainment in downwind states. States have the flexibility to choose which control measures to adopt to achieve the budgets, including participating in the EPA-administered cap-and-trade programs. In the SIP revision that EPA is approving today, Georgia has met the CAIR requirements by electing to participate in the EPA-administered cap-and-trade programs addressing SO_2 and NO_X annual emissions.

DATES: This rule is effective on November 8, 2007.

ADDRESSES: EPA has established a docket for this action under Docket ID No. EPA–R04–OAR–2007–0251. All documents in the docket are listed on the *www.regulations.gov* Web site. Although listed in the index, some information is not publicly available, *i.e.*, Confidential Business Information or other information whose disclosure is restricted by statute. Certain other material, such as copyrighted material, is not placed on the Internet and will be publicly available only in hard copy form. Publicly available docket materials are available either electronically through *www.regulations.gov* or in hard copy at the Regulatory Development Section, Air Planning Branch, Air, Pesticides and Toxics Management Division, U.S. Environmental Protection Agency, Region 4, 61 Forsyth Street, SW., Atlanta, Georgia 30303–8960. EPA requests that if at all possible, you contact the person listed in the **FOR FURTHER INFORMATION CONTACT** section to schedule your inspection. The Regional Office's official hours of business are Monday through Friday, 8:30 to 4:30, excluding federal holidays.

FOR FURTHER INFORMATION CONTACT: Stacy Harder, Regulatory Development Section, Air Planning Branch, Air, Pesticides and Toxics Management Division, Region 4, U.S. Environmental Protection Agency, 61 Forsyth Street, SW., Atlanta, Georgia 30303–8960. The telephone number is (404) 562–9042. Ms. Harder can also be reached via electronic mail at *harder.stacy@epa.gov*.

SUPPLEMENTARY INFORMATION: Throughout this document whenever ''we,'' ''us,'' or ''our'' is used, we mean EPA.

Table of Contents

I. What Action Is EPA Taking?
II. What Is the Regulatory History of CAIR and the CAIR FIPs?
III. What Are the General Requirements of CAIR and the CAIR FIPs?
IV. Analysis of Georgia's CAIR SIP Submittal
A. State Budgets for Allowance Allocations
B. CAIR Cap-and-Trade Programs
C. NO_X Allowance Allocations
D. Allocation of NO_X Allowances From the Compliance Supplement Pool
E. Individual Opt-in Units
V. What Comments Did We Receive and What Are Our Responses?
VI. Final Action
VII. Statutory and Executive Order Reviews

I. What Action Is EPA Taking?

EPA is taking final action to approve a revision to Georgia's SIP submitted on March 28, 2007. In its SIP revision, Georgia has met the CAIR requirements by requiring certain electric generating units (EGUs) to participate in the EPA-administered State CAIR cap-and-trade programs addressing SO_2, and NO_X annual emissions. Georgia's regulations adopt by reference most of the provisions of EPA's SO_2, and NO_X annual model trading rules, with certain changes discussed below. EPA has determined that the SIP as revised will meet the applicable requirements of CAIR. As a result of this action, the Administrator of EPA will also issue a final rule to withdraw the FIPs concerning SO_2, and NO_X annual emissions for Georgia. The Administrator's action will delete and reserve 40 CFR 52.584 and 40 CFR 52.585, relating to the CAIR FIP obligations for Georgia. The withdrawal of the CAIR FIPs for Georgia is a conforming amendment that must be made once the SIP is approved because EPA's authority to issue the FIPs was premised on a deficiency in the SIP for Georgia. Once a SIP is fully approved, EPA no longer has authority for the FIPs. Thus, EPA does not have the option of maintaining the FIPs following full SIP approval. Accordingly, EPA does not intend to offer an opportunity for a public hearing or an additional opportunity for written public comment on the withdrawal of the FIPs.

EPA proposed to approve Georgia's request to amend the SIP on August 2, 2007 (72 FR 42349). In that proposal, EPA also stated its intent to withdraw the FIP, as described above. The comment period closed on September 4, 2007. One comment was received and is addressed in Section V below. EPA is finalizing the approval as proposed based on the rationale stated in the proposal and in this final action.

II. What Is the Regulatory History of CAIR and the CAIR FIPs?

CAIR was published by EPA on May 12, 2005 (70 FR 25162). In this rule, EPA determined that 28 States and the District of Columbia contribute significantly to nonattainment and interfere with maintenance of the NAAQS for $PM_{2.5}$ and/or 8-hour ozone in downwind States in the eastern part of the country. As a result, EPA required those upwind States to revise their SIPs to include control measures that reduce emissions of SO_2, which is a precursor to $PM_{2.5}$ formation, and/or NO_X, which is a precursor to both ozone and $PM_{2.5}$ formation. For jurisdictions that contribute significantly to downwind $PM_{2.5}$ nonattainment, CAIR sets annual State-wide emission reduction requirements (i.e., budgets) for SO_2 and annual State-wide emission reduction requirements for NO_X. Similarly, for jurisdictions that contribute significantly to 8-hour ozone nonattainment, CAIR sets State-wide emission reduction requirements for NO_X for the ozone season (May 1 to September 30). Under CAIR, States may implement these reduction requirements by participating in the EPA-administered cap-and-trade programs or by adopting any other control measures.

CAIR explains to subject States what must be included in SIPs to address the requirements of section 110(a)(2)(D) of the Clean Air Act (CAA) with regard to interstate transport with respect to the 8-hour ozone and $PM_{2.5}$ NAAQS. EPA made national findings, effective on May 25, 2005, that the States had failed to submit SIPs meeting the requirements of section 110(a)(2)(D). The SIPs were due in July 2000, 3 years after the promulgation of the 8-hour ozone and $PM_{2.5}$ NAAQS.

III. What Are the General Requirements of CAIR and the CAIR FIPs?

CAIR establishes State-wide emission budgets for SO_2 and NO_X and is to be implemented in two phases. The first phase of NO_X reductions starts in 2009 and continues through 2014, while the first phase of SO_2 reductions starts in 2010 and continues through 2014. The second phase of reductions for both NO_X and SO_2 starts in 2015 and continues thereafter. CAIR requires States to implement the budgets by either: (1) Requiring EGUs to participate in the EPA-administered cap-and-trade programs; or (2) adopting other control measures of the State's choosing and demonstrating that such control measures will result in compliance with the applicable State SO_2 and NO_X budgets.

The May 12, 2005, and April 28, 2006, CAIR rules provide model rules that States must adopt (with certain limited changes, if desired) if they want to participate in the EPA-administered trading programs.

With two exceptions, only States that choose to meet the requirements of CAIR through methods that exclusively regulate EGUs are allowed to participate

in the EPA-administered trading programs. One exception is for States that adopt the opt-in provisions of the model rules to allow non-EGUs individually to opt into the EPA-administered trading programs. The other exception is for States that include all non-EGUs from their NO_X SIP Call trading programs in their CAIR NO_X ozone season trading programs.

IV. Analysis of Georgia's CAIR SIP Submittal

A. State Budgets for Allowance Allocations

In this action, EPA is taking final action to approve Georgia's SIP revision that adopts the budgets established for the State in CAIR, *i.e.*, 66,321 (2009–2014) and 55,268 (2015-thereafter) tons for NO_X annual emissions, and 213,057 (2010–2014) and 149,140 (2015–thereafter) tons for SO_2 emissions. Georgia's SIP revision sets these budgets as the total amounts of allowances available for allocation for each year under the EPA-administered cap-and-trade programs.

B. CAIR Cap-and-Trade Programs

The CAIR NO_X annual and ozone season model trading rules both largely mirror the structure of the NO_X SIP Call model trading rule in 40 CFR part 96, subparts A through I. While the provisions of the NO_X annual and ozone season model rules are similar, there are some differences. For example, the NO_X annual model rule (but not the NO_X ozone season model rule) provides for a compliance supplement pool (CSP), which is discussed below and under which allowances may be awarded for early reductions of NO_X annual emissions. As a further example, the NO_X ozone season model rule reflects the fact that the CAIR NO_X ozone season trading program replaces the NO_X SIP Call trading program after the 2008 ozone season and is coordinated with the NO_X SIP Call program. The NO_X ozone season model rule provides incentives for early emissions reductions by allowing banked, pre-2009 NO_X SIP Call allowances to be used for compliance in the CAIR NO_X ozone season trading program. In addition, States have the option of continuing to meet their NO_X SIP Call requirement by participating in the CAIR NO_X ozone season trading program and including all their NO_X SIP Call trading sources in that program.

The provisions of the CAIR SO_2 model rule are also similar to the provisions of the NO_X annual and ozone season model rules. However, the SO_2 model rule is coordinated with the ongoing Acid Rain SO_2 cap-and-trade program under CAA title IV. The SO_2 model rule uses the title IV allowances for compliance, with each allowance allocated for 2010–2014 authorizing only 0.50 ton of emissions and each allowance allocated for 2015 and thereafter authorizing only 0.35 ton of emissions. Banked title IV allowances allocated for years before 2010 can be used at any time in the CAIR SO_2 cap-and-trade program, with each such allowance authorizing one ton of emissions. Title IV allowances are to be freely transferable among sources covered by the Acid Rain Program and sources covered by the CAIR SO_2 cap-and-trade program.

EPA also used the CAIR model trading rules as the basis for the trading programs in the CAIR FIPs. The CAIR FIP trading rules are virtually identical to the CAIR model trading rules, with changes made to account for Federal rather than State implementation. The CAIR model SO_2, NO_X annual, and NO_X ozone season trading rules and the respective CAIR FIP trading rules are designed to work together as integrated SO_2, NO_X annual, and NO_X ozone season trading programs.

In the SIP revision, Georgia has chosen to implement its CAIR budgets by requiring EGUs to participate in EPA-administered cap-and-trade programs for SO_2 and NO_X annual emissions. Georgia has adopted a full SIP revision that adopts, with certain allowed changes discussed below, the CAIR model cap-and-trade rules for SO_2 and NO_X annual emissions.

C. NO_X Allowance Allocations

Under the NO_X allowance allocation methodology in the CAIR model trading rules and in the CAIR FIPs, NO_X annual and ozone season allowances are allocated to units that have operated for five years, based on heat input data from a three-year period that are adjusted for fuel type by using fuel factors of 1.0 for coal, 0.6 for oil, and 0.4 for other fuels. The CAIR model trading rules and the CAIR FIPs also provide a new unit set-aside from which units without five years of operation are allocated allowances based on the units' prior year emissions.

States may establish in their SIP submissions a different NO_X allowance allocation methodology that will be used to allocate allowances to sources in the States if certain requirements are met concerning the timing of submission of units' allocations to the Administrator for recordation and the total amount of allowances allocated for each control period. In adopting alternative NO_X allowance allocation methodologies, States have flexibility with regard to: (1) The cost to recipients of the allowances, which may be distributed for free or auctioned; (2) the frequency of allocations; (3) the basis for allocating allowances, which may be distributed, for example, based on historical heat input or electric and thermal output; and (4) the use of allowance set-asides and, if used, their size.

Georgia has chosen to replace the provisions of the CAIR NO_X annual model trading rule concerning the allocation of NO_X annual allowances with its own methodology. Georgia has chosen to distribute NO_X annual allowances based upon allocation methods for both existing and new units. Georgia defines an existing unit as one that commences operation prior to January 1, 2006, rather than 2001 as in EPA's model rule. Georgia defines new sources as those that have commenced operation on or after January 1, 2006, and do not yet have a baseline heat input. Under Georgia's cap and trade program, allowances will be allocated to EGUs in an amount no greater than the NO_X budget established in EPA's model rule. Allocations are based on the highest annual amount of heat input during a baseline period, using heat input figures that are fuel-adjusted as set forth in EPA's model rule. Allowances are initially allocated for 2010 through 2011 and are allocated on a year-by-year basis, about three years in advance, for 2012 and each subsequent year. The baseline period for initial allocations is 2001–2005, and will be updated annually for subsequent allocations. For years 2010 and thereafter, 97 percent of the budget will be allocated to existing sources, with the remaining three percent allocated to new sources. A new-unit set aside will be established for each control period, and will be allocated CAIR NO_X allowances equal to 1,990 for control period 2009–2014. For control period 2015 and thereafter, the new-unit set aside will be allocated 1,658 CAIR NO_X allowances. EPA is taking final action to approve these variations from the model rule provisions because the changes are consistent with the flexibility that CAIR provides States with regard to allocation methodologies.

D. Allocation of NO_X Allowances From the Compliance Supplement Pool

CAIR establishes a compliance supplement pool to provide an incentive for early reductions in NO_X annual emissions. The CSP consists of 200,000 CAIR NO_X annual allowances of vintage 2009 for the entire CAIR region, and a State's share of the CSP is

based upon the projected magnitude of the emission reductions required by CAIR in that State. States may distribute CSP allowances, one allowance for each ton of early reduction, to sources that make NO_X reductions during 2007 or 2008 beyond what is required by any applicable State or Federal emission limitation. States also may distribute CSP allowances based upon a demonstration of need for an extension of the 2009 deadline for implementing emission controls.

The CAIR annual NO_X model trading rule establishes specific methodologies for allocations of CSP allowances. States may choose an allowed, alternative CSP allocation methodology to be used to allocate CSP allowances to sources in the States.

Georgia has not chosen to modify the provisions from the CAIR NO_X annual model trading rule concerning the allocation of allowances from the CSP. Georgia has chosen to distribute CSP allowances using the allocation methodology provided in 40 CFR 96.143 and has adopted this section by reference.

E. Individual Opt-In Units

The opt-in provisions of the CAIR SIP model trading rules allow certain non-EGUs (i.e., boilers, combustion turbines, and other stationary fossil-fuel-fired devices) that do not meet the applicability criteria for a CAIR trading program to participate voluntarily in (i.e., opt into) the CAIR trading program. A non-EGU may opt into one or more of the CAIR trading programs. In order to qualify to opt into a CAIR trading program, a unit must vent all emissions through a stack and be able to meet monitoring, recordkeeping, and recording requirements of 40 CFR part 75. The owners and operators seeking to opt a unit into a CAIR trading program must apply for a CAIR opt-in permit. If the unit is issued a CAIR opt-in permit, the unit becomes a CAIR unit, is allocated allowances, and must meet the same allowance-holding and emissions monitoring and reporting requirements as other units subject to the CAIR trading program. The opt-in provisions provide for two methodologies for allocating allowances for opt-in units, one methodology that applies to opt-in units in general and a second methodology that allocates allowances only to opt-in units that the owners and operators intend to repower before January 1, 2015.

States have several options concerning the opt-in provisions. States may adopt the CAIR opt-in provisions entirely or may adopt them but exclude one of the methodologies for allocating allowances. States may also decline to adopt the opt-in provisions at all.

Georgia has chosen not to allow non-EGUs meeting certain requirements to opt into the CAIR SO_2 and CAIR NO_X annual trading programs.

V. What Comments Did We Receive and What Are Our Responses?

EPA received one comment letter from Summit Energy Partners, LLC (SEP–LLC). The following is a summary of the adverse comment received on the proposed rule published August 2, 2007, (72 FR 42349), and EPA's response to the comment.

Comment: SEP–LLC objected to Georgia's CAIR NO_X annual trading program new unit allocation provisions. SEP–LLC commented that Georgia's rule is inadequate and unfairly biases against new renewable resources in the State. It objects to a new source NO_X allocation methodology based on emission levels—a methodology it argues will not give renewable new sources a meaningful NO_X allocation. SEP–LLC asks EPA to remand Georgia's rule back to the Georgia Environmental Protection Division and seek new unit allocation provisions which do not favor large coal-fired units over the smaller-scale renewable sources.

Response: Under CAIR, EPA allows States participating in the CAIR NO_X trading programs to determine the methodology for allocating allowances to individual sources in that State, provided that certain specified requirements concerning the State NO_X budgets and allocation timing are met. *See* 70 FR 25160, 25279 (May 12, 2005.) When reviewing CAIR SIP submissions, therefore, EPA does not review issues relating to the equity of, or other general public policy concerns (e.g., environmental impacts other than the effect on NO_X emissions) that might be raised concerning, the State NO_X allocation methodology. Instead, EPA reviews the State allocation methodology for compliance with the requirements of CAIR.

Under CAIR, EPA establishes emission budgets for each State, and States have the option of participating in trading programs to satisfy their NO_X emission reduction requirements. Section 51.123(o) of CAIR provides that a State will be found to have demonstrated compliance with the State's annual NO_X budget if it adopts regulations substantively identical to the CAIR NO_X annual trading program model rule, or adopting regulations that differ substantively from that model rule in only a few specifically defined ways. One of the ways in which a State's annual NO_X trading program rule may differ from the CAIR model rule relates to the methodology used to allocate CAIR NO_X allowances. States participating in the CAIR annual NO_X trading program are given the flexibility to select the methodology for allocating allowances to units in their State, including the flexibility to decide whether any allowances should be reserved for new units and, if they are reserved, how they should be allocated. There are some limitations on the flexibility to select an allocation methodology. In particular, the allocation methodology cannot result in total allocations for a year exceeding the applicable State budget. In addition, each State must include in its rules provisions requiring it to meet certain deadlines for determining the allocations for units and submitting the allocation determinations to the EPA Administrator, who will record the allocations in the allowance tracking system. *See* 40 CFR 51.123(o)(2)(ii).

In this case, EPA has determined that the NO_X allocation methodology Georgia used to distribute its NO_X allowances meets the above-described requirements of CAIR. The commenter does not assert that Georgia's methodology fails to meet these requirements. Because Georgia's revised SIP meet these, and the other, requirements of CAIR, EPA is approving Georgia's revised SIP.

VI. Final Action

EPA is taking final action to approve Georgia's full CAIR SIP revision submitted on March 28, 2007. Under this SIP revision, Georgia is choosing to participate in the EPA-administered cap-and-trade programs for SO_2 and NO_X annual emissions. EPA has determined that the SIP revision meets the applicable requirements in 40 CFR 51.123(o) and (aa), with regard to NO_X annual emissions, and 40 CFR 51.124(o), with regard to SO_2 emissions. EPA has determined that the SIP as revised will meet the requirements of CAIR. The Administrator of EPA will also issue, without providing an opportunity for a public hearing or an additional opportunity for written public comment, a final rule to withdraw the CAIR FIPs concerning SO_2, NO_X annual, and NO_X ozone season emissions for CFR 52.584 and 40 CFR 52.585. EPA will take final action to withdraw the CAIR FIPs for Georgia in a separate rulemaking.

VII. Statutory and Executive Order Reviews

Under Executive Order 12866 (58 FR 51735, October 4, 1993), this action is not a ''significant regulatory action'' and

therefore is not subject to review by the Office of Management and Budget. For this reason, this action is also not subject to Executive Order 13211, ''Actions Concerning Regulations That Significantly Affect Energy Supply, Distribution, or Use'' (66 FR 28355, May 22, 2001). This action merely approves State law as meeting Federal requirements and would impose no additional requirements beyond those imposed by State law. Accordingly, the Administrator certifies that this rule will not have a significant economic impact on a substantial number of small entities under the Regulatory Flexibility Act (5 U.S.C. 601 *et seq.*). Because this action approves pre-existing requirements under State law and does not impose any additional enforceable duty beyond that required by State law, it does not contain any unfunded mandate or significantly or uniquely affect small governments, as described in the Unfunded Mandates Reform Act of 1995 (Pub. L. 104–4).

This rule also does not have tribal implications because it will not have a substantial direct effect on one or more Indian tribes, on the relationship between the Federal Government and Indian tribes, or on the distribution of power and responsibilities between the Federal Government and Indian tribes, as specified by Executive Order 13175 (65 FR 67249, November 9, 2000). This action also does not have Federalism implications because it does not have substantial direct effects on the States, on the relationship between the national government and the States, or on the distribution of power and responsibilities among the various levels of government, as specified in Executive Order 13132 (64 FR 43255, August 10, 1999). This action merely approves a State rule implementing a Federal standard, and does not alter the relationship or the distribution of power and responsibilities established in the CAA. This rule also is not subject to Executive Order 13045 ''Protection of Children from Environmental Health Risks and Safety Risks'' (62 FR 19885, April 23, 1997), because it approves a State rule implementing a Federal standard.

In reviewing SIP submissions, EPA's role is to approve State choices, provided that they meet the criteria of the CAA. In this context, in the absence of a prior existing requirement for the State to use voluntary consensus standards (VCS), EPA has no authority to disapprove a SIP submission for failure to use VCS. It would thus be inconsistent with applicable law for EPA, when it reviews a SIP submission, to use VCS in place of a SIP submission that otherwise satisfies the provisions of the CAA. Thus, the requirements of section 12(d) of the National Technology Transfer and Advancement Act of 1995 (15 U.S.C. 272 note) do not apply. This rule does not impose an information collection burden under the provisions of the Paperwork Reduction Act of 1995 (44 U.S.C. 3501 *et seq.*).

The Congressional Review Act, 5 U.S.C. 801 *et seq.*, as added by the Small Business Regulatory Enforcement Fairness Act of 1996, generally provides that before a rule may take effect, the agency promulgating the rule must submit a rule report, which includes a copy of the rule, to each House of the Congress and to the Comptroller General of the United States. EPA will submit a report containing this rule and other required information to the U.S. Senate, the U.S. House of Representatives, and the Comptroller General of the United States prior to publication of the rule in the **Federal Register**. A major rule cannot take effect until 60 days after it is published in the **Federal Register**. This action is not a ''major rule'' as defined by 5 U.S.C. 804(2).

Under section 307(b)(1) of the CAA, petitions for judicial review of this action must be filed in the United States Court of Appeals for the appropriate circuit December 10, 2007. Filing a petition for reconsideration by the Administrator of this final rule does not affect the finality of this rule for the purposes of judicial review nor does it extend the time within which a petition for judicial review may be filed, and shall not postpone the effectiveness of such rule or action. This action may not be challenged later in proceedings to enforce its requirements. (See section 307(b)(2)).

List of Subjects in 40 CFR Part 52

Environmental protection, Air pollution control, Incorporation by reference, Intergovernmental relations, Nitrogen oxides, Ozone, Particulate matter, Reporting and recordkeeping requirements, Sulfur oxides, Volatile organic compounds.

Dated: September 26, 2007.

J.I. Palmer, Jr.,

Regional Administrator, Region 4.

■ 40 CFR part 52 is amended as follows:

PART 52—[AMENDED]

■ 1. The authority citation for part 52 continues to read as follows:

Authority: 42 U.S.C. 7401 *et seq.*

Subpart L—Georgia

■ 2. Section 52.570(c) is amended by adding in numerical order new entries ''391–3–1–.02(12)'' and ''391–3–1–.02(13)'' to read as follows:

§ 52.570 Identification of plan.

* * * * *

(c) * * *

EPA-APPROVED GEORGIA REGULATIONS

State citation	Title/subject	State effective date	EPA approval date	Explanation
391–3–1–.02 Provisions				
* *	* *	*	* *	*
391–3–1–.02(12)	Clean Air Interstate Rule NO_X Annual Trading Program.	02/28/07	10/09/07 [Insert citation of publication].	
391–3–1–.02(13)	Clean Air Interstate Rule SO_2 Annual Trading Program.	02/28/07	10/09/07 [Insert citation of publication].	

* * * * *

[FR Doc. E7–19637 Filed 10–5–07; 8:45 am]
BILLING CODE 6560–50–P

ENVIRONMENTAL PROTECTION AGENCY

40 CFR Parts 52 and 81

[EPA–R03–OAR–2007–0476; FRL–8478–9]

Approval and Promulgation of Air Quality Implementation Plans; Pennsylvania; Redesignation of the Erie 8-Hour Ozone Nonattainment Area to Attainment and Approval of the Area's Maintenance Plan and 2002 Base Year Inventory

AGENCY: Environmental Protection Agency (EPA).

ACTION: Final rule.

SUMMARY: EPA is approving a State Implementation Plan (SIP) revision submitted by the Commonwealth of Pennsylvania. The Pennsylvania Department of Environmental Protection (PADEP) is requesting that the Erie 8-hour ozone nonattainment area (''Erie Area'' or ''Area'') be redesignated as attainment for the 8-hour ozone ambient air quality standard (NAAQS). The Area is comprised of Erie County, Pennsylvania. EPA is approving the ozone redesignation request for the Erie Area. In conjunction with its redesignation request, PADEP submitted a SIP revision consisting of a maintenance plan for Erie Area that provides for continued attainment of the 8-hour ozone NAAQS for at least 10 years after redesignation. EPA is approving the 8-hour maintenance plan. PADEP also submitted a 2002 base year inventory for the Erie Area which EPA is approving. In addition, EPA is approving the adequacy determination for the motor vehicle emission budgets (MVEBs) that are identified in the Erie Area maintenance plan for purposes of transportation conformity, and is approving those MVEBs. EPA is approving the redesignation request, and the maintenance plan and the 2002 base year emissions inventory as revisions to the Pennsylvania SIP in accordance with the requirements of the Clean Air Act (CAA).

DATES: *Effective Date:* This final rule is effective on November 8, 2007.

ADDRESSES: EPA has established a docket for this action under Docket ID Number EPA–R03–OAR–2007–0476. All documents in the docket are listed in the *www.regulations.gov* Web site. Although listed in the electronic docket, some information is not publicly available, i.e., confidential business information (CBI) or other information whose disclosure is restricted by statute. Certain other material, such as copyrighted material, is not placed on the Internet and will be publicly available only in hard copy form. Publicly available docket materials are available either electronically through *www.regulations.gov* or in hard copy for public inspection during normal business hours at the Air Protection Division, U.S. Environmental Protection Agency, Region III, 1650 Arch Street, Philadelphia, Pennsylvania 19103. Copies of the State submittal are available at the Pennsylvania Department of Environment Protection, Bureau of Air Quality Control, P.O. Box 8468, 400 Market Street, Harrisburg, Pennsylvania 17105.

FOR FURTHER INFORMATION CONTACT: Amy Caprio, (215) 814–2156, or by e-mail at *caprio.amy@epa.gov.*

SUPPLEMENTARY INFORMATION:

I. Background

On July 25, 2007 (72 FR 40776), EPA published a notice of proposed rulemaking (NPR) for the Commonwealth of Pennsylvania. The NPR proposed approval of Pennsylvania's redesignation request, a SIP revision that establishes a maintenance plan for the Erie Area that provides for continued attainment of the 8-hour ozone NAAQS for at least 10 years after redesignation, and a 2002 base year emissions inventory. The formal SIP revisions were submitted by PADEP on April 24, 2007. Other specific requirements of Pennsylvania's redesignation request SIP revision for the maintenance plan and the rationales for EPA's proposed actions are explained in the NPR and will not be restated here. No public comments were received on the NPR.

However, on December 22, 2006, the U.S. Court of Appeals for the District of Columbia Circuit vacated EPA's Phase 1 Implementation Rule for the 8-hour Ozone Standard. (69 FR 23951, April 30, 2004). *South Coast Air Quality Management Dist.* v. *EPA,* 472 F.3d 882 (D.C. Cir. 2006). On June 8, 2007, in *South Coast Air Quality Management Dist.* v. *EPA,* Docket No. 04–1201, in response to several petitions for rehearing, the D.C. Circuit clarified that the Phase 1 Rule was vacated only with regard to those parts of the rule that had been successfully challenged. Therefore, the Phase 1 Rule provisions related to classifications for areas currently classified under subpart 2 of Title I, part D of the CAA as 8-hour nonattainment areas, the 8-hour attainment dates and the timing for emissions reductions needed for attainment of the 8-hour ozone NAAQS remain effective. The June 8 decision left intact the Court's rejection of EPA's reasons for implementing the 8-hour standard in certain nonattainment areas under subpart 1 in lieu of subpart 2. By limiting the vacatur, the Court let stand EPA's revocation of the 1-hour standard and those anti-backsliding provisions of the Phase 1 Rule that had not been successfully challenged. The June 8 decision reaffirmed the December 22, 2006 decision that EPA had improperly failed to retain measures required for 1-hour nonattainment areas under the anti-backsliding provisions of the regulations: (1) Nonattainment area New Source Review (NSR) requirements based on an area's 1-hour nonattainment classification; (2) Section 185 penalty fees for 1-hour severe or extreme nonattainment areas; and (3) measures to be implemented pursuant to section 172(c)(9) or 182(c)(9) of the CAA, on the contingency of an area not making reasonable further progress toward attainment of the 1-hour NAAQS, or for failure to attain that NAAQS. In addition the June 8 decision clarified that the Court's reference to conformity requirements for anti-backsliding purposes was limited to requiring the continued use of 1-hour MVEBs until 8-hour budgets were available for 8-hour conformity determinations, which is already required under EPA's conformity regulations. The Court thus clarified that 1-hour conformity determinations are not required for anti-backsliding purposes.

For the reasons set forth in the proposal, EPA does not believe that the Court's rulings alter any requirements relevant to this redesignation action so as to preclude redesignation, and do not prevent EPA from finalizing this redesignation. EPA believes that the Court's December 22, 2006 and June 8, 2007 decisions impose no impediment to moving forward with redesignation of this area to attainment, because even in light of the Court's decisions, redesignation is appropriate under the relevant redesignation provisions of the CAA and longstanding policies regarding redesignation requests.

In its proposal, EPA proposed to find that the area had satisfied the requirements under the 1-hour standard whether the 1-hour standard was deemed to be reinstated or whether the Court's decision on the petition for rehearing were modified to require something less than compliance with all applicable 1-hour requirements. Because EPA proposed to find that the area satisfied the requirements under either scenario, EPA is proceeding to

finalize the redesignation and to conclude that the area met the requirements under the 1-hour standard applicable for purposes of redesignation under the 8-hour standard. These include the provisions of EPA's anti-backsliding rules, as well as the additional anti-backsliding provisions identified by the Court in its rulings. In its June 8, 2007 decision the Court limited its vacatur so as to uphold those provisions of the anti-backsliding requirements that were not successfully challenged. Therefore, EPA finds that the area has met the anti-backsliding requirements, *see* 40 CFR 51.900 et seq; 70 FR 30592, 30604 (May 26, 2005) which apply by virtue of the area's classification for the 1-hour ozone NAAQS, as well as the four additional anti-backsliding provisions identified by the Court, or that such requirements are not applicable for purposes of redesignation. In addition, with respect to the requirement for transportation conformity under the 1-hour standard, the Court in its June 8 decision clarified that for those areas with 1-hour MVEBs, anti-backsliding requires only that those 1-hour budgets must be used for 8-hour conformity determinations until replaced by 8-hour budgets. To meet this requirement, conformity determinations in such areas must continue to comply with the applicable requirements of EPA's conformity regulations at 40 CFR Part 93. The court clarified that 1-hour conformity determinations are not required for anti-backsliding purposes.

II. Final Action

EPA is approving the Commonwealth of Pennsylvania's redesignation request, maintenance plan, and the 2002 base year emissions inventory because the requirements for approval have been satisfied. EPA has evaluated Pennsylvania's redesignation request that was submitted on April 24, 2007 and determined that it meets the redesignation criteria set forth in section 107(d)(3)(E) of the CAA. EPA believes that the redesignation request and monitoring data demonstrate that the Erie Area has attained the 8-hour ozone standard. The final approval of this redesignation request will change the designation of the Erie Area from nonattainment to attainment for the 8-hour ozone standard. EPA is approving the maintenance plan for the Erie Area submitted on April 24, 2007 as a revision to the Pennsylvania SIP. EPA is also approving the MVEBs submitted by PADEP in conjunction with its redesignation request. In addition, EPA is approving the 2002 base year emissions inventory submitted by PADEP on April 24, 2007 as a revision to the Pennsylvania SIP. In this final rulemaking, EPA is notifying the public that we have found that the MVEBs for volatile organic compounds (VOC) and nitrogen oxides (NO_X) in the Erie Area for the 8-hour ozone maintenance plan are adequate and approved for conformity purposes. As a result of our finding, the Erie Area must use the MVEBs from the submitted 8-hour ozone maintenance plan for future conformity determinations. The adequate and approved MVEBs are provided in the following table:

ADEQUATE AND APPROVED MOTOR VEHICLE EMISSIONS BUDGETS IN TONS PER SUMMER DAY (TPSD)

Budget year	VOC	NO_X
2009	6.5	15.6
2018	4.0	6.7

The Erie Area is subject to the CAA's requirement for the basic nonattainment areas until and unless it is redesignated to attainment.

III. Statutory and Executive Order Reviews

A. General Requirements

Under Executive Order 12866 (58 FR 51735, October 4, 1993), this action is not a ''significant regulatory action'' and therefore is not subject to review by the Office of Management and Budget. For this reason, this action is also not subject to Executive Order 13211, ''Actions Concerning Regulations That Significantly Affect Energy Supply, Distribution, or Use'' (66 FR 28355, May 22, 2001). This action merely approves state law as meeting Federal requirements and imposes no additional requirements beyond those imposed by state law. Accordingly, the Administrator certifies that this rule will not have a significant economic impact on a substantial number of small entities under the Regulatory Flexibility Act (5 U.S.C. 601 *et seq.*). Because this rule approves pre-existing requirements under state law and does not impose any additional enforceable duty beyond that required by state law, it does not contain any unfunded mandate or significantly or uniquely affect small governments, as described in the Unfunded Mandates Reform Act of 1995 (Pub. L. 104–4). This rule also does not have tribal implications because it will not have a substantial direct effect on one or more Indian tribes, on the relationship between the Federal Government and Indian tribes, or on the distribution of power and responsibilities between the Federal Government and Indian tribes, as specified by Executive Order 13175 (65 FR 67249, November 9, 2000). This action also does not have Federalism implications because it does not have substantial direct effects on the States, on the relationship between the national government and the States, or on the distribution of power and responsibilities among the various levels of government, as specified in Executive Order 13132 (64 FR 43255, August 10, 1999). This action merely approves a state rule implementing a Federal requirement, and does not alter the relationship or the distribution of power and responsibilities established in the CAA. This rule also is not subject to Executive Order 13045 (''Protection of Children from Environmental Health Risks and Safety Risks'' (62 FR 19885, April 23, 1997), because it approves a state rule implementing a Federal standard.

In reviewing SIP submissions, EPA's role is to approve state choices, provided that they meet the criteria of the CAA. In this context, in the absence of a prior existing requirement for the State to use voluntary consensus standards (VCS), EPA has no authority to disapprove a SIP submission for failure to use VCS. It would thus be inconsistent with applicable law for EPA, when it reviews a SIP submission, to use VCS in place of a SIP submission that otherwise satisfies the provisions of the CAA. Thus, the requirements of section 12(d) of the National Technology Transfer and Advancement Act of 1995 (15 U.S.C. 272 note) do not apply. This rule does not impose an information collection burden under the provisions of the Paperwork Reduction Act of 1995 (44 U.S.C. 3501 *et seq.*).

B. Submission to Congress and the Comptroller General

The Congressional Review Act, 5 U.S.C. 801 *et seq.*, as added by the Small Business Regulatory Enforcement Fairness Act of 1996, generally provides that before a rule may take effect, the agency promulgating the rule must submit a rule report, which includes a copy of the rule, to each House of the Congress and to the Comptroller General of the United States. EPA will submit a report containing this rule and other required information to the U.S. Senate, the U.S. House of Representatives, and the Comptroller General of the United States prior to publication of the rule in the **Federal Register**. This rule is not a ''major rule'' as defined by 5 U.S.C. 804(2).

C. Petitions for Judicial Review

Under section 307(b)(1) of the CAA, petitions for judicial review of this action must be filed in the United States Court of Appeals for the appropriate circuit by December 10, 2007. Filing a petition for reconsideration by the Administrator of this final rule does not affect the finality of this rule for the purposes of judicial review nor does it extend the time within which a petition for judicial review may be filed, and shall not postpone the effectiveness of such rule or action. This action, approving the redesignation of the Erie Area to attainment for the 8-hour ozone NAAQS, the associated maintenance plan, the 2002 base year emission inventory, and the MVEBs identified in the maintenance plan, may not be challenged later in proceedings to enforce its requirements. (See section 307(b)(2).)

List of Subjects

40 CFR Part 52

Environmental protection, Air pollution control, Incorporation by reference, Nitrogen dioxide, Ozone, Reporting and recordkeeping requirements, Volatile organic compounds.

40 CFR Part 81

Air pollution control, National parks, Wilderness areas.

Dated: September 25, 2007.

Donald S. Welsh,

Regional Administrator, Region III.

■ 40 CFR part 52 is amended as follows:

PART 52—[AMENDED]

■ 1. The authority citation for part 52 continues to read as follows:

Authority: 42 U.S.C. 7401 *et seq.*

Subpart NN—Pennsylvania

■ 2. In § 52.2020, the table in paragraph (e)(1) is amended by adding an entry for the 8-hour Ozone Maintenance Plan and the 2002 Base Year Emissions Inventory for Erie County, Pennsylvania at the end of the table to read as follows:

§ 52.2020 Identification of plan.

* * * * *

(e) * * *

(1)* * *

Name of non-regulatory SIP revision	Applicable geographic area	State submittal date	EPA approval date	Additional explanation
*	*	*	*	*
8-Hour Ozone Maintenance Plan and 2002 Base Year Emissions Inventory.	Erie County	04/24/07	10/09/07 [Insert page number where the document begins]	

* * * * *

PART 81—[AMENDED]

■ 1. The authority citation for part 81 continues to read as follows:

Authority: 42 U.S.C. 7401 *et seq.*

■ 2. In § 81.339, the table entitled ''Pennsylvania-Ozone (8-Hour Standard)'' is amended by revising the entry for the Erie, PA: Erie County to read as follows:

§ 81.339 Pennsylvania.

* * * * *

PENNSYLVANIA—OZONE (8-HOUR STANDARD)

Designated area	Designation [a]		Category/Classification	
	Date [1]	Type	Date [1]	Type
*	*	*	*	*
Erie, PA: Erie County	10/09/07	Attainment		
*	*	*	*	*

[a] Includes Indian County located in each county or area, except otherwise noted.
[1] This date is June 15, 2004, unless otherwise noted.

* * * * *

[FR Doc. E7–19633 Filed 10–5–07; 8:45 am]

BILLING CODE 6560–50–P

ENVIRONMENTAL PROTECTION AGENCY

40 CFR Parts 52 and 97

[EPA–R04–OAR–2007–0424–200746(a); FRL–8478–3]

Approval of Implementation Plans of South Carolina: Clean Air Interstate Rule

AGENCY: Environmental Protection Agency (EPA).

ACTION: Direct final rule.

SUMMARY: EPA is approving revisions to the South Carolina State Implementation Plan (SIP) submitted on August 14, 2007. These revisions incorporate provisions related to the implementation of EPA's Clean Air Interstate Rule (CAIR), promulgated on May 12, 2005 and subsequently revised on April 28, 2006 and December 13, 2006, and the CAIR Federal Implementation Plans (FIPs) concerning sulfur dioxide (SO_2), nitrogen oxides (NO_X) annual, and NO_X ozone season emissions for the State of South Carolina, promulgated on April 28, 2006 and subsequently revised December 13, 2006. EPA is not making any changes to the CAIR FIPs, but is amending the

appropriate appendices in the CAIR FIP trading rules simply to note this approval.

On September 19, 2007, South Carolina requested that EPA only act on a portion of the August 14, 2007, submittal as an abbreviated SIP. Consequently, EPA is approving the abbreviated SIP revisions that address the methodology to be used to allocate annual and ozone season NO_X allowances under the CAIR FIPs as well as opt-in provisions for the SO_2, NO_X annual, and NO_X ozone season trading programs. South Carolina also requested that EPA approve compliance supplement pool (CSP) provisions for the NO_X annual trading program.

DATES: This direct final rule is effective December 10, 2007 without further notice, unless EPA receives adverse comment by November 8, 2007. If EPA receives such comments, it will publish a timely withdrawal of the direct final rule in the **Federal Register** and inform the public that the rule will not take effect.

ADDRESSES: Submit your comments, identified by Docket ID No. EPA–R04–OAR–2007–0424, by one of the following methods:

1. *http://www.regulations.gov:* Follow the on-line instructions for submitting comments.
2. *E-mail: ward.nacosta@epa.gov.*
3. *Fax:* (404) 562–9019.
4. *Mail:* ''EPA–R04–OAR–2007–0424'', Regulatory Development Section, Air Planning Branch, Air, Pesticides and Toxics Management Division, U.S. Environmental Protection Agency, Region 4, 61 Forsyth Street, SW., Atlanta, Georgia 30303–8960.
5. *Hand Delivery or Courier:* Nacosta C. Ward, Regulatory Development Section, Air Planning Branch, Air, Pesticides and Toxics Management Division, U.S. Environmental Protection Agency, Region 4, 61 Forsyth Street, SW., Atlanta, Georgia 30303–8960. Such deliveries are only accepted during the Regional Office's normal hours of operation. The Regional Office's official hours of business are Monday through Friday, 8:30 to 4:30, excluding federal holidays.

Instructions: Direct your comments to Docket ID No. ''EPA–R04–OAR–2007–0424.'' EPA's policy is that all comments received will be included in the public docket without change and may be made available online at *www.regulations.gov*, including any personal information provided, unless the comment includes information claimed to be Confidential Business Information (CBI) or other information whose disclosure is restricted by statute. Do not submit through *www.regulations.gov* or e-mail, information that you consider to be CBI or otherwise protected. The *www.regulations.gov* Web site is an ''anonymous access'' system, which means EPA will not know your identity or contact information unless you provide it in the body of your comment. If you send an e-mail comment directly to EPA without going through *www.regulations.gov*, your e-mail address will be automatically captured and included as part of the comment that is placed in the public docket and made available on the Internet. If you submit an electronic comment, EPA recommends that you include your name and other contact information in the body of your comment and with any disk or CD–ROM you submit. If EPA cannot read your comment due to technical difficulties and cannot contact you for clarification, EPA may not be able to consider your comment. Electronic files should avoid the use of special characters and any form of encryption and should be free of any defects or viruses. For additional information about EPA's public docket visit the EPA Docket Center homepage at *http://www.epa.gov/epahome/dockets.htm.*

Docket: All documents in the electronic docket are listed in the *www.regulations.gov* index. Although listed in the index, some information is not publicly available, i.e., CBI or other information whose disclosure is restricted by statute. Certain other material, such as copyrighted material, is not placed on the Internet and will be publicly available only in hard copy form. Publicly available docket materials are available either electronically in *www.regulations.gov* or in hard copy at the Regulatory Development Section, Air Planning Branch, Air, Pesticides and Toxics Management Division, U.S. Environmental Protection Agency, Region 4, 61 Forsyth Street, SW., Atlanta, Georgia 30303–8960. EPA requests that if at all possible, you contact the person listed in the **FOR FURTHER INFORMATION CONTACT** section to schedule your inspection. The Regional Office's official hours of business are Monday through Friday, 8:30 to 4:30, excluding Federal holidays.

FOR FURTHER INFORMATION CONTACT: If you have questions concerning today's approval, please contact Nacosta C. Ward, Regulatory Development Section, Air Planning Branch, Air, Pesticides and Toxics Management Division, U.S. Environmental Protection Agency, Region 4, 61 Forsyth Street, SW., Atlanta, Georgia 30303–8960. The telephone number is 404–562–9140. Ms. Ward can also be reached via electronic mail at *ward.nacosta@epa.gov.*

SUPPLEMENTARY INFORMATION:

Table of Contents

I. What Action Is EPA Taking?
II. What Is the Regulatory History of CAIR and the CAIR FIPs?
III. What Are the General Requirements of CAIR and the CAIR FIPs?
IV. What Are the Types of CAIR SIP Submittals?
V. Analysis of South Carolina's CAIR SIP Submittal
A. State Budgets for Allowance Allocations
B. CAIR Cap-and-Trade Programs
C. Applicability Provisions for Non-Electric Generating Units (EGUs) NO_X SIP Call Sources
D. NO_X Allowance Allocations
E. Allocation of NO_X Allowances From the CSP
F. Individual Opt-In Units
VI. Final Action
VII. Statutory and Executive Order Reviews

I. What Action Is EPA Taking?

CAIR SIP Approval

EPA is approving revisions to the South Carolina SIP, submitted on August 14, 2007, and revised on September 19, 2007, that would modify the application of certain provisions of the CAIR FIPs concerning SO_2, NO_X annual, and NO_X ozone season emissions. (As discussed below, this less comprehensive CAIR SIP is termed an abbreviated SIP.) South Carolina is subject to the CAIR FIPs that implement the CAIR requirements by requiring certain EGUs to participate in the EPA-administered Federal CAIR SO_2, NO_X annual, and NO_X ozone season cap-and-trade programs. The SIP revision provides a methodology for allocating NO_X allowances for the NO_X annual and NO_X ozone season trading programs. The CAIR FIPs provide that this methodology, if approved by EPA, will be used to allocate NO_X allowances to sources in South Carolina, instead of the Federal allocation methodology otherwise provided in the FIP. The SIP revision also provides a methodology for allocating the compliance supplement pool in the CAIR NO_X annual trading program, and allows for individual units not otherwise subject to the CAIR trading programs to opt into such trading programs. Specifically, EPA is approving South Carolina's SIP submission that includes the allocation methodologies for the CAIR NO_X annual and NO_X ozone season trading programs and CAIR FIP opt-in provisions. The SIP revision also addresses South Carolina's CSP provisions in the CAIR NO_X annual trading program. Consistent with the

flexibility provided in the FIPs, these provisions will also be used to replace or supplement, as appropriate, the corresponding provisions in the CAIR FIPs for South Carolina. EPA is not making any changes to the CAIR FIPs, but is amending the appropriate appendices in the CAIR FIP trading rules simply to note this approval.

EPA is publishing this rule without prior proposal because the Agency views this as a noncontroversial submittal and anticipates no adverse comments. However, in the proposed rules section of this **Federal Register** publication, EPA is publishing a separate document that will serve as the proposal to approve the SIP revision should adverse comments be filed.

II. What Is the Regulatory History of the CAIR and the CAIR FIPs?

CAIR was published by EPA on May 12, 2005 (70 FR 25162). In this rule, EPA determined that 28 States and the District of Columbia contribute significantly to nonattainment and interfere with maintenance of the national ambient air quality standards (NAAQS) for fine particulates ($PM_{2.5}$) and/or 8-hour ozone in downwind States in the eastern part of the country. As a result, EPA required those upwind States to revise their SIPs to include control measures that reduce emissions of SO_2, which is a precursor to $PM_{2.5}$ formation, and/or NO_X, which is a precursor to both ozone and $PM_{2.5}$ formation. For jurisdictions that contribute significantly to downwind $PM_{2.5}$ nonattainment, CAIR sets annual State-wide emission reduction requirements (*i.e.*, budgets) for SO_2 and annual State-wide emission reduction requirements for NO_X. Similarly, for jurisdictions that contribute significantly to 8-hour ozone nonattainment, CAIR sets State-wide emission reduction requirements for NO_X for the ozone season (May 1st to September 30th). Under CAIR, States may implement these emission budgets by participating in the EPA-administered cap-and-trade programs or by adopting any other control measures.

CAIR explains to subject States what must be included in SIPs to address the requirements of section 110(a)(2)(D) of the Clean Air Act (CAA) with regard to interstate transport with respect to the 8-hour ozone and $PM_{2.5}$ NAAQS. EPA made national findings, effective May 25, 2005, that the States had failed to submit SIPs meeting the requirements of section 110(a)(2)(D). The SIPs were due in July 2000, 3 years after the promulgation of the 8-hour ozone and $PM_{2.5}$ NAAQS. These findings started a 2-year clock for EPA to promulgate a FIP to address the requirements of section 110(a)(2)(D). Under CAA section 110(c)(1), EPA may issue a FIP anytime after such findings are made and must do so within two years, unless a SIP revision correcting the deficiency is approved by EPA before the FIP is promulgated.

On April 28, 2006, EPA promulgated FIPs for all States covered by CAIR in order to ensure the emissions reductions required by CAIR are achieved on schedule. Each CAIR State is subject to the FIPs until the State fully adopts, and EPA approves, a SIP revision meeting the requirements of CAIR. The CAIR FIPs require certain EGUs to participate in the EPA-administered CAIR SO_2, NO_X annual, and NO_X ozone-season model trading programs, as appropriate. The CAIR FIP SO_2, NO_X annual, and NO_X ozone season trading programs impose essentially the same requirements as, and are integrated with, the respective CAIR SIP trading programs. The integration of the CAIR FIP and SIP trading programs means that these trading programs will work together to create effectively a single trading program for each regulated pollutant (SO_2, NO_X annual, and NO_X ozone season) in all States covered by a CAIR FIP or SIP trading program for that pollutant. The CAIR FIPs also allow States to submit abbreviated SIP revisions that, if approved by EPA, will automatically replace or supplement the corresponding CAIR FIP provisions (e.g., the methodology for allocating NO_X allowances to sources in the state), while the CAIR FIP remains in place for all other provisions.

On April 28, 2006, EPA published two more CAIR-related final rules that added the States of Delaware and New Jersey to the list of States subject to CAIR for $PM_{2.5}$ and announced EPA's final decisions on reconsideration of five issues without making any substantive changes to the CAIR requirements.

III. What Are the General Requirements of CAIR and the CAIR FIPs?

CAIR establishes State-wide emission budgets for SO_2 and NO_X and is to be implemented in two phases. The first phase of NO_X reductions starts in 2009 and continues through 2014, while the first phase of SO_2 reductions starts in 2010 and continues through 2014. The second phase of reductions for both NO_X and SO_2 starts in 2015 and continues thereafter. CAIR requires States to implement the budgets by either: (1) Requiring EGUs to participate in the EPA-administered cap-and-trade programs; or, (2) adopting other control measures of the State's choosing and demonstrating that such control measures will result in compliance with the applicable State SO_2 and NO_X budgets.

The May 12, 2005 and April 28, 2006 CAIR rules provide model rules that States must adopt (with certain limited changes, if desired) if they want to participate in the EPA-administered trading programs.

With two exceptions, only States that choose to meet the requirements of CAIR through methods that exclusively regulate EGUs are allowed to participate in the EPA-administered trading programs. One exception is for States that adopt the opt-in provisions of the model rules to allow non-EGUs individually to opt into the EPA-administered trading programs. The other exception is for States that include all non-EGUs from their NO_X SIP Call trading programs in their CAIR NO_X ozone season trading programs.

IV. What Are the Types of CAIR SIP Submittals?

States have the flexibility to choose the type of control measures they will use to meet the requirements of CAIR. EPA anticipates that most States will choose to meet the CAIR requirements by selecting an option that requires EGUs to participate in the EPA-administered CAIR cap-and-trade programs. For such States, EPA has provided two approaches for submitting and obtaining approval for CAIR SIP revisions. States may submit full SIP revisions that adopt the model CAIR cap-and-trade rules. If approved, these SIP revisions will fully replace the CAIR FIPs. Alternatively, States may submit abbreviated SIP revisions. These SIP revisions will not replace the CAIR FIPs; however, the CAIR FIPs provide that, when approved, the provisions in these abbreviated SIP revisions will be used instead of or in conjunction with, as appropriate, the corresponding provisions of the CAIR FIPs (e.g., the NO_X allowance allocation methodology).

A State submitting an abbreviated SIP revision, may submit limited SIP revisions to tailor the CAIR FIP cap-and-trade programs to the State submitting the revision. Specifically, an abbreviated SIP revision may establish certain applicability and allowance allocation provisions that, the CAIR FIPs provide, will be used instead of or in conjunction with the corresponding provisions in the CAIR FIP rules in that State. Specifically, the abbreviated SIP revisions may:

1. Include NO_X SIP Call trading sources that are not EGUs under CAIR

in the CAIR FIP NO_X ozone season trading program;

2. Provide for allocation of NO_X annual or ozone season allowances by the State, rather than the Administrator of the EPA or the Administrator's duly authorized representative (Administrator), and using a methodology chosen by the State;

3. Provide for allocation of NO_X annual allowances from the CSP by the State, rather than by the Administrator, and using the State's choice of allowed, alternative methodologies; or

4. Allow units that are not otherwise CAIR units to opt individually into the CAIR FIP cap-and-trade programs under the opt-in provisions in the CAIR FIP rules.

With approval of an abbreviated SIP revision, the CAIR FIPs remain in place, as tailored to sources in the State by the approved SIP revisions.

Abbreviated SIP revisions can be submitted in lieu of, or as part of, CAIR full SIP revisions. States may want to designate part of their full SIP as an abbreviated SIP for EPA to act on first when the timing of the State's submission might not provide EPA with sufficient time to approve the full SIP prior to the deadline for recording NO_X allocations. This will help ensure that the elements of the trading programs where flexibility is allowed are implemented according to the State's decisions. Submission of an abbreviated SIP revision does not preclude future submission of a CAIR full SIP revision. In this case, the September 19, 2007, submittal from South Carolina has been submitted as an abbreviated SIP revision.

V. Analysis of South Carolina's CAIR SIP Submittal

A. State Budgets for Allowance Allocations

The CAIR NO_X annual and ozone season budgets were developed from historical heat input data for EGUs. Using these data, EPA calculated annual and ozone season regional heat input values, which were multiplied by 0.15 pounds per million British thermal units (lb/mmBtu), for phase 1, and 0.125 lb/mmBtu, for phase 2, to obtain regional NO_X budgets for 2009–2014 and for 2015 and thereafter, respectively. EPA derived the State NO_X annual and ozone season budgets from the regional budgets using State heat input data adjusted by fuel factors.

The CAIR State SO_2 budgets were derived by discounting the tonnage of emissions authorized by annual allowance allocations under the Acid Rain Program under title IV of the CAA. Under CAIR, each allowance allocated under the Acid Rain Program for the years in phase 1 of CAIR (2010 through 2014) authorizes 0.50 ton of SO_2 emissions in the CAIR trading program, and each Acid Rain Program allowance allocated for the years in phase 2 of CAIR (2015 and thereafter) authorizes 0.35 ton of SO_2 emissions in the CAIR trading program.

The CAIR FIPs established the budgets for South Carolina as 32,662 tons for NO_X annual emissions for 2009–2014 and 27,219 tons for NO_X annual emissions for 2015 and thereafter, 15,249 tons for NO_X ozone season emissions for 2009–2014 and 12,707 tons for NO_X ozone season emissions for 2015 and thereafter, and 57,271 tons for SO_2 emissions for 2009–2014 and 40,089 tons for SO_2 emissions for 2015 and thereafter. South Carolina's SIP revision, being approved in this action, does not affect these budgets, which are total amounts of allowances available for allocation for each year under the EPA-administered cap-and-trade programs under the CAIR FIPs. In short, the abbreviated SIP revision only affects allocations of allowances under the established budgets.

B. CAIR Cap-and-Trade Programs

The CAIR NO_X annual and ozone-season FIPs both largely mirror the structure of the NO_X SIP Call model trading rule in 40 CFR part 96, subparts A through I. While the provisions of the NO_X annual and ozone-season FIPs are similar, there are some differences. For example, the NO_X annual FIP (but not the NO_X ozone season FIP) provides for a CSP, which is discussed below and under which allowances may be awarded for early reductions of NO_X annual emissions. As a further example, the NO_X ozone season FIP reflects the fact that the CAIR NO_X ozone season trading program replaces the NO_X SIP Call trading program after the 2008 ozone season and is coordinated with the NO_X SIP Call program. The NO_X ozone season FIP provides incentives for early emissions reductions by allowing banked, pre-2009 NO_X SIP Call allowances to be used for compliance in the CAIR NO_X ozone-season trading program. In addition, States have the option of continuing to meet their NO_X SIP Call requirement by participating in the CAIR NO_X ozone season trading program and including all their NO_X SIP Call trading sources in that program.

The provisions of the CAIR SO_2 FIP are also similar to the provisions of the NO_X annual and ozone season FIPs. However, the SO_2 FIP is coordinated with the ongoing Acid Rain SO_2 cap-and-trade program under CAA title IV. The SO_2 FIP uses the title IV allowances for compliance, with each allowance allocated for 2010–2014 authorizing only 0.50 ton of emissions and each allowance allocated for 2015 and thereafter authorizing only 0.35 ton of emissions. Banked title IV allowances allocated for years before 2010 can be used at any time in the CAIR SO_2 cap-and-trade program, with each such allowance authorizing 1 ton of emissions. Title IV allowances are to be freely transferable among sources covered by the Acid Rain Program and sources covered by the CAIR SO_2 cap-and-trade program.

EPA used the CAIR model trading rules as the basis for the trading programs in the CAIR FIPs. The CAIR FIP trading rules are virtually identical to the CAIR model trading rules, with changes made to account for federal rather than state implementation. The CAIR model SO_2, NO_X annual, and NO_X ozone season trading rules and the respective CAIR FIP trading rules are designed to work together as integrated SO_2, NO_X annual, and NO_X ozone season trading programs.

South Carolina is subject to the CAIR FIPs for ozone and $PM_{2.5}$ and the CAIR FIP trading programs for SO_2, NO_X annual, and NO_X ozone season which apply to sources in South Carolina. Consistent with the flexibility they give to States, the CAIR FIPs provide that States may submit abbreviated SIP revisions that will replace or supplement, as appropriate, certain provisions of the CAIR FIP trading programs. The August 14, 2007, submission of South Carolina is such an abbreviated SIP revision.

C. Applicability Provisions for Non-Electric Generating Units (EGU) NO_X SIP Call Sources

In general, the CAIR FIP trading programs apply to any stationary, fossil-fuel-fired boiler or stationary, fossil-fuel-fired combustion turbine serving at any time, since the later of November 15, 1990, or the start-up of the unit's combustion chamber, a generator with nameplate capacity of more than 25 megawatt electrical (MWe) producing electricity for sale.

States have the option of bringing in, for the CAIR NO_X ozone season program only, those units in the State's NO_X SIP Call trading program that are not EGUs as defined under CAIR. EPA advises States exercising this option to use provisions for applicability that are substantively identical to the provisions in 40 CFR 96.304 and add the applicability provisions in the State's NO_X SIP Call trading rule for non-EGUs to the applicability provisions in 40 CFR

96.304 in order to include in the CAIR NO_X ozone season trading program all units required to be in the State's NO_X SIP Call trading program that are not already included under 40 CFR 96.304. Under this option, the CAIR NO_X ozone season program must cover all large industrial boilers and combustion turbines, as well as any small EGUs (i.e., units serving a generator with a nameplate capacity of 25 MWe or less), that the State currently requires to be in the NO_X SIP Call trading program.

Consistent with the flexibility given to States in the CAIR FIPs, in the abbreviated SIP revision being approved in today's action, South Carolina has not chosen to expand the applicability provisions of the CAIR NO_X ozone season trading program to include all non-EGUs in the State's NO_X SIP Call trading program. EPA notes that South Carolina has indicated that it intends to submit subsequently a full SIP revision that expands the applicability provisions of the CAIR NO_X ozone season trading program in this manner.

D. NO_X Allowance Allocations

Under the NO_X allowance allocation methodology in the CAIR model trading rules and in the CAIR FIPs, NO_X annual and ozone season allowances are allocated to units that have operated for five years, based on heat input data from a three-year period that are adjusted for fuel type by using fuel factors of 1.0 for coal, 0.6 for oil, and 0.4 for other fuels. The CAIR model trading rules and the CAIR FIPs also provide a new unit set-aside from which units without five years of operation are allocated allowances based on the units' prior year emissions.

The CAIR FIPs provide States the flexibility to establish a different NO_X allowance allocation methodology that will be used to allocate allowances to sources in the States if certain requirements are met concerning the timing of submission of units' allocations to the Administrator for recordation and the total amount of allowances allocated for each control period. In adopting alternative NO_X allowance allocation methodologies, States have flexibility with regard to:

1. The cost to recipients of the allowances, which may be distributed for free or auctioned;
2. The frequency of allocations;
3. The basis for allocating allowances, which may be distributed, for example, based on historical heat input or electric and thermal output; and
4. The use of allowance set-asides and, if used, their size.

Consistent with the flexibility given to States in the CAIR FIPs, South Carolina has chosen to replace the provisions of the CAIR NO_X annual FIP concerning the allocation of NO_X annual allowances with its own methodology. South Carolina has chosen to distribute NO_X annual allowances by adopting, with certain revisions, the CAIR NO_X annual trading program model rule at 40 CFR 96.141 and 96.142.

Consistent with the flexibility given to States in the CAIR FIPs, South Carolina has chosen to replace the provisions of the CAIR NO_X ozone season FIP concerning allowance allocations with their own methodology. South Carolina has chosen to distribute NO_X ozone season allowances by adopting, with certain revisions, the CAIR NO_X ozone season trading program model rule at 40 CFR 96.341 and 96.342.

E. Allocation of NO_X Allowances From the Compliance Supplement Pool

The CSP provides an incentive for early reductions in NO_X annual emissions. The CSP consists of 200,000 CAIR NO_X annual allowances of vintage 2009 for the entire CAIR region, and a State's share of the CSP is based upon the State's share of the projected emission reductions under CAIR. States may distribute CSP allowances, one allowance for each ton of early reduction, to sources that make NO_X reductions during 2007 or 2008 beyond what is required by any applicable State or Federal emission limitation. States also may distribute CSP allowances based upon a demonstration of need for an extension of the 2009 deadline for implementing emission controls.

The CAIR NO_X annual FIP establishes specific methodologies for allocations of CSP allowances. States may choose an allowed, alternative CSP allocation methodology to be used to allocate CSP allowances to sources in those States.

Consistent with the flexibility given to States in the FIP, South Carolina has chosen to modify the provisions of the CAIR NO_X annual FIP concerning the allocation of allowances from the CSP. South Carolina has chosen to distribute CSP allowances by adopting, with certain revisions, the CAIR NO_X annual CSP provisions in the model rule at 40 CFR 96.143.

F. Individual Opt-In Units

The opt-in provisions allow for certain non-EGUs (i.e., boilers, combustion turbines, and other stationary fossil-fuel-fired devices) that do not meet the applicability criteria for a CAIR trading program to participate voluntarily in (i.e., opt into) the CAIR trading program. A non-EGU may opt into one or more of the CAIR trading programs. In order to qualify to opt into a CAIR trading program, a unit must vent all emissions through a stack and be able to meet monitoring, recordkeeping, and recording requirements of 40 CFR part 75. The owners and operators seeking to opt a unit into a CAIR trading program must apply for a CAIR opt-in permit. If the unit is issued a CAIR opt-in permit, the unit becomes a CAIR unit, is allocated allowances, and must meet the same allowance-holding and emissions monitoring and reporting requirements as other units subject to the CAIR trading program. The opt-in provisions provide for two methodologies for allocating allowances for opt-in units, one methodology that applies to opt-in units in general and a second methodology that allocates allowances only to opt-in units that the owners and operators intend to repower before January 1, 2015.

States have several options concerning the opt-in provisions. The rules for each of the CAIR FIP trading programs include opt-in provisions that are essentially the same as those in the respective CAIR SIP model rules, except that the CAIR FIP opt-in provisions become effective in a State only if the State's abbreviated SIP revision adopts the opt-in provisions. The State may adopt the opt-in provisions entirely or may adopt them but exclude one of the allowance allocation methodologies. The State also has the option of not adopting any opt-in provisions in the abbreviated SIP revision and thereby providing for the CAIR FIPs trading program to be implemented in the State without the ability for units to opt into the program.

Consistent with the flexibility given to States in the FIPs, South Carolina has chosen to allow non-EGUs meeting certain requirements to participate in the CAIR NO_X annual trading program. The South Carolina rule allows for both of the opt-in allocation methods as specified in 40 CFR part 97 Subpart II of the CAIR NO_X annual trading program.

Consistent with the flexibility given to States in the FIPs, South Carolina has chosen to permit non-EGUs meeting certain requirements to participate in the CAIR NO_X ozone season trading program. The South Carolina rule allows for both of the opt-in allocation methods as specified in 40 CFR part 97 Subpart IIII of the CAIR NO_X ozone season trading program.

Consistent with the flexibility given to States in the FIPs, South Carolina has chosen to allow certain non-EGUs to opt into the CAIR SO_2 trading program. The South Carolina rule allows for both of the opt-in allocation methods as

specified in 40 CFR part 97 Subpart III of the CAIR SO_2 trading program.

VI. Final Action

EPA is approving South Carolina's abbreviated CAIR SIP revisions submitted on September 19, 2007. South Carolina is covered by the CAIR FIPs, which requires participation in the EPA-administered CAIR FIP cap-and-trade programs for SO_2, NO_X annual, and NO_X ozone season emissions. Under these abbreviated SIP revisions and consistent with the flexibility given to States in the FIPs, South Carolina adopts provisions for allocating allowances under the CAIR FIP NO_X annual and ozone season trading programs. EPA is approving South Carolina's CAIR NO_X annual and ozone season allocation provisions for units subject to the CAIR trading programs under the current CAIR FIP NO_X annual and ozone season applicability provisions. In addition, South Carolina adopts in the abbreviated SIP revision provisions that establish a methodology for allocating allowances in the CSP and allow for individual non-EGUs to opt into the CAIR FIP SO_2, NO_X annual, and NO_X ozone season cap-and-trade programs. EPA is approving South Carolina's allowing for opt-in units and therefore the application of the opt-in provisions in these CAIR FIP trading programs to units in South Carolina.

As provided for in the CAIR FIPs, these provisions in the abbreviated SIP revision will replace or supplement the corresponding provisions of the CAIR FIPs in South Carolina. The abbreviated SIP revision meets the applicable requirements in 40 CFR 51.123(p) and (ee), with regard to NO_X annual and NO_X ozone season emissions, and 40 CFR 51.124(r), with regard to SO_2 emissions. EPA is not making any changes to the CAIR FIPs, but is amending the appropriate appendices in the CAIR FIP trading rules simply to note this approval.

EPA is approving the aforementioned changes to the SIP. EPA is publishing this rule without prior proposal because the Agency views this as a noncontroversial submittal and anticipates no adverse comments. However, in the proposed rules section of this **Federal Register** publication, EPA is publishing a separate document that will serve as the proposal to approve the SIP revision should adverse comments be filed. This rule will be effective December 10, 2007 without further notice unless the Agency receives adverse comments by November 8, 2007.

If the EPA receives such comments, then EPA will publish a document withdrawing the final rule and informing the public that the rule will not take effect. All public comments received will then be addressed in a subsequent final rule based on the proposed rule. EPA will not institute a second comment period. Parties interested in commenting should do so at this time. If no such comments are received, the public is advised that this rule will be effective on December 10, 2007 and no further action will be taken on the proposed rule.

VII. Statutory and Executive Order Reviews

Under Executive Order 12866 (58 FR 51735, October 4, 1993), this action is not a ''significant regulatory action'' and therefore is not subject to review by the Office of Management and Budget. For this reason, this action is also not subject to Executive Order 13211, ''Actions Concerning Regulations That Significantly Affect Energy Supply, Distribution, or Use'' (66 FR 28355, May 22, 2001). This action merely approves state law as meeting Federal requirements and imposes no additional requirements beyond those imposed by State law. Accordingly, the Administrator certifies that this rule will not have a significant economic impact on a substantial number of small entities under the Regulatory Flexibility Act (5 U.S.C. 601 *et seq.*). Because this rule approves pre-existing requirements under state law and does not impose any additional enforceable duty beyond that required by State law, it does not contain any unfunded mandate or significantly or uniquely affect small governments, as described in the Unfunded Mandates Reform Act of 1995 (Pub. L. 104–4).

This rule also does not have tribal implications because it will not have a substantial direct effect on one or more Indian tribes, on the relationship between the Federal Government and Indian tribes, or on the distribution of power and responsibilities between the Federal Government and Indian tribes, as specified by Executive Order 13175 (65 FR 67249, November 9, 2000). This action also does not have Federalism implications because it does not have substantial direct effects on the States, on the relationship between the national government and the States, or on the distribution of power and responsibilities among the various levels of government, as specified in Executive Order 13132 (64 FR 43255, August 10, 1999). This action merely approves a state rule implementing a Federal standard, and does not alter the relationship or the distribution of power and responsibilities established in the CAA. This rule also is not subject to Executive Order 13045 ''Protection of Children from Environmental Health Risks and Safety Risks'' (62 FR 19885, April 23, 1997), because it is not economically significant.

In reviewing SIP submissions, EPA's role is to approve state choices, provided that they meet the criteria of the CAA. In this context, in the absence of a prior existing requirement for the State to use voluntary consensus standards (VCS), EPA has no authority to disapprove a SIP submission for failure to use VCS. It would thus be inconsistent with applicable law for EPA, when it reviews a SIP submission, to use VCS in place of a SIP submission that otherwise satisfies the provisions of the CAA. Thus, the requirements of section 12(d) of the National Technology Transfer and Advancement Act of 1995 (15 U.S.C. 272 note) do not apply. This rule does not impose an information collection burden under the provisions of the Paperwork Reduction Act of 1995 (44 U.S.C. 3501 *et seq.*).

The Congressional Review Act, 5 U.S.C. 801 *et seq.*, as added by the Small Business Regulatory Enforcement Fairness Act of 1996, generally provides that before a rule may take effect, the agency promulgating the rule must submit a rule report, which includes a copy of the rule, to each House of the Congress and to the Comptroller General of the United States. EPA will submit a report containing this rule and other required information to the U.S. Senate, the U.S. House of Representatives, and the Comptroller General of the United States prior to publication of the rule in the **Federal Register**. A major rule cannot take effect until 60 days after it is published in the **Federal Register**. This action is not a ''major rule'' as defined by 5 U.S.C. 804(2).

Under section 307(b)(1) of the CAA, petitions for judicial review of this action must be filed in the United States Court of Appeals for the appropriate circuit by December 10, 2007. Filing a petition for reconsideration by the Administrator of this final rule does not affect the finality of this rule for the purposes of judicial review nor does it extend the time within which a petition for judicial review may be filed, and shall not postpone the effectiveness of such rule or action. This action may not be challenged later in proceedings to enforce its requirements. (See section 307(b)(2)).

List of Subjects

40 CFR Part 52

Environmental protection, Air pollution control, Electric utilities,

Incorporation by reference, Intergovernmental relations, Nitrogen oxides, Ozone, Particulate matter, Reporting and recordkeeping requirements, Sulfur dioxide.

40 CFR Part 97

Environmental protection, Air pollution control, Electric utilities, Intergovernmental relations, Nitrogen oxides, Ozone, Particulate matter, Reporting and recordkeeping requirements, Sulfur dioxide.

Dated: September 26, 2007.

J.I. Palmer, Jr.,

Regional Administrator, Region 4.

■ 40 CFR parts 52 and 97 are amended as follows:

PART 52—[AMENDED]

■ 1. The authority citation for part 52 continues to read as follows:

Authority: 42 U.S.C. 7401 *et seq.*

Subpart PP—South Carolina

■ 2. In § 52.2120, paragraph (c) is amended by revising the entry for Regulation 62.96 to read as follows:

§ 52.2120 Identification of plan.

* * * * * *

(c) * * *

AIR POLLUTION CONTROL REGULATIONS FOR SOUTH CAROLINA

State citation	Title/subject	State effective date	EPA approval date	Federal Register notice
*	*	*	*	*
Regulation No. 62.96	Nitrogen Oxides (NO_X) and Sulfur Dioxide (SO_2) Budget Trading Program General Provisions.	8/14/07	10/09/07	[Insert first page of publication].
*	*	*	*	*

* * * * *

PART 97—[AMENDED]

■ 3. The authority citation for part 97 continues to read as follows:

Authority: 42 U.S.C. 7401, 7403, 7410, 7426, 7601, and 7651, *et seq.*

■ 4. Appendix A to Subpart EE is amended by adding in alphabetical order the entry ''South Carolina'' under paragraphs 1. and 2. to read as follows:

Appendix A to Subpart EE of Part 97—States With Approved State Implementation Plan Revisions Concerning Allocations

1. * * *
South Carolina
2. * * *
South Carolina

* * * * *

■ 5. Appendix A to Subpart II of Part 97 is amended by adding in alphabetical order the entry ''South Carolina'' under paragraphs 1. and 2. to read as follows:

Appendix A to Subpart II of Part 97—States With Approved State Implementation Plan Revisions Concerning CAIR NO_X Opt-In Units

1. * * *
South Carolina
2. * * *
South Carolina

* * * * *

■ 6. Appendix A to Subpart III of Part 97 is amended by adding in alphabetical order the entry ''South Carolina'' under paragraphs 1. and 2. to read as follows:

Appendix A to Subpart III of Part 97—States With Approved State Implementation Plan Revisions Concerning CAIR SO_2 Opt-In Units

1. * * *
South Carolina
2. * * *
South Carolina

* * * * *

■ 7. Appendix A to Subpart EEEE of Part 97 is amended by adding in alphabetical order the entry ''South Carolina'' under the introductory text to read as follows:

Appendix A to Subpart EEEE of Part 97—States With Approved State Implementation Plan Revisions Concerning Allocations

* * * * *

South Carolina

* * * * *

■ 8. Appendix A to Subpart IIII of Part 97 is amended by adding in alphabetical order the entry ''South Carolina'' under paragraphs 1. and 2. to read as follows:

Appendix A to Subpart IIII of Part 97—States With Approved State Implementation Plan Revisions Concerning CAIR NO_X Ozone Season Opt-In Units

1. * * *
South Carolina
2. * * *
South Carolina

* * * * *

[FR Doc. E7–19646 Filed 10–5–07; 8:45 am]

BILLING CODE 6560–50–P

ENVIRONMENTAL PROTECTION AGENCY

40 CFR Part 59

[EPA–HQ–OAR–2007–0454; FRL–8478–7]

RIN 2060–A014

Consumer and Commercial Products: Control Techniques Guidelines in Lieu of Regulations for Paper, Film, and Foil Coatings; Metal Furniture Coatings; and Large Appliance Coatings

AGENCY: Environmental Protection Agency (EPA).

ACTION: Final rule; Notice of final determination and availability of final control techniques guidelines.

SUMMARY: Pursuant to section 183(e)(3)(C) of the Clean Air Act, EPA has determined that control techniques guidelines will be substantially as effective as national regulations in reducing emissions of volatile organic compounds in ozone national ambient air quality standard nonattainment areas from the following three Group III product categories: paper, film, and foil coatings; metal furniture coatings; and large appliance coatings. Based on this determination, EPA is issuing control techniques guidelines in lieu of national regulations for these product categories. These control techniques guidelines will provide guidance to the States concerning EPA's recommendations for reasonably available control technology-level controls for these product categories. EPA further takes final action to list the three Group III consumer and commercial product categories

addressed in this notice pursuant to Clean Air Act section 183(e).

DATES: This final action is effective on October 9, 2007.

ADDRESSES: EPA has established the following dockets for these actions: Consumer and Commercial Products, Group III—Determination to Issue Control Techniques Guidelines in Lieu of Regulations, Docket No. EPA–HQ–OAR–2007–0454; Consumer and Commercial Products—Paper, Film, and Foil Coatings, Docket No.EPA–HQ–OAR–2007–0336; Consumer and Commercial Products—Metal Furniture Coatings, Docket No. EPA–HQ–OAR–2007–0334; and Consumer and Commercial Products—Large Appliance Coatings, Docket No. EPA–HQ–OAR–2007–0329. All documents in the docket are listed in the *http://www.regulations.gov* index. Although listed in the index, some information is not publicly available, e.g., confidential business information (CBI) or other information whose disclosure is restricted by statute. Certain other material, such as copyrighted material, is not placed on the Internet and is publicly available only in hard copy form. Publicly available docket materials are available either electronically through *http://www.regulations.gov* or in hard copy at the EPA Docket Center, Public Reading Room, EPA West, Room 3334, 1301 Constitution Ave., NW., Washington, DC. The Public Reading Room is open from 8:30 a.m. to 4:30 p.m., Monday through Friday, excluding legal holidays. The telephone number for the Public Reading Room is (202) 566–1744, and the telephone number for the Air Docket is (202) 566–1742.

FOR FURTHER INFORMATION CONTACT: For information concerning the CAA section 183(e) consumer and commercial products program, contact Mr. Bruce Moore, U.S. EPA, Office of Air Quality Planning and Standards, Sector Policies and Programs Division, Natural Resources and Commerce Group (E143–03), Research Triangle Park, North Carolina 27711, telephone number: (919) 541–5460, fax number (919) 541–3470, e-mail address: *moore.bruce@epa.gov.* For further information on technical issues concerning the determination and control techniques guidelines (CTG) for paper, film, and foil coatings, contact: Ms. Kim Teal, U.S. EPA, Office of Air Quality Planning and Standards, Sector Policies and Programs Division, Natural Resources and Commerce Group (E143–03), Research Triangle Park, North Carolina 27711, telephone number: (919) 541–5580, e-mail address: *teal.kim@epa.gov.* For further information on technical issues concerning the determination and CTG for metal furniture coatings, contact: Ms. Martha Smith, U.S. EPA, Office of Air Quality Planning and Standards, Sector Policies and Programs Division, Natural Resources and Commerce Group (E143–03), Research Triangle Park, North Carolina 27711, telephone number: (919) 541–2421, e-mail address: *smith.martha@epa.gov.*

For further information on technical issues concerning the determination and CTG for large appliance coatings, contact: Mr. Lynn Dail, U.S. EPA, Office of Air Quality Planning and Standards, Sector Policies and Programs Division, Natural Resources and Commerce Group (E143–03), Research Triangle Park, North Carolina 27711, telephone number: (919) 541–2363, e-mail address: *dail.lynn@epa.gov.*

SUPPLEMENTARY INFORMATION:

Entities Potentially Affected by this Action. The entities potentially affected by this action include industrial facilities that use the respective consumer and commercial products covered in this action as follows:

Category	NAICS code [a]	Examples of affected entities
Paper, film, and foil coatings	322221, 322222, 322223, 322224, 322225, 322226, 322229, 325992, 326111, 326112, 326113, 32613, 32791, 339944.	Facilities that apply coatings to packaging paper, paper bags, laminated aluminum foil, coated paperboard, photographic film, abrasives, carbon paper, and other coated paper, film and foil products.
Metal furniture coatings	337124, 337214, 337127, 337215, 337127, 332951, 332116, 332612, 337215, 335121, 335122, 339111, 339114, 337127, 81142.	Facilities that apply coatings to metal furniture components or products.
Large appliance coatings	335221, 335222, 335224, 335228, 333312, 333319	Facilities that apply coatings to household and commercial cooking equipment, refrigerators, laundry equipment, laundry drycleaning and pressing equipment.
Federal Government	.....	Not affected.
State/local/tribal government	.....	State, local and tribal regulatory agencies.

[a] North American Industry Classification System.

This table is not intended to be exhaustive, but rather provides a guide for readers regarding entities likely to be affected by this action. If you have any questions regarding the applicability of this action to a particular entity, consult the appropriate EPA contact listed in the **FOR FURTHER INFORMATION CONTACT** section of this notice.

World Wide Web (WWW)

In addition to being available in the docket, an electronic copy of this final action will also be available on the Worldwide Web (WWW) through the Technology Transfer Network (TTN). Following signature, a copy of the final action will be posted on the TTN's policy and guidance page for newly proposed or promulgated rules at the following address: *http://www.epa.gov/ttn/oarpg/.* The TTN provides information and technology exchange in various areas of air pollution control.

Judicial Review

Under section 307(b)(1) of the CAA, judicial review of EPA's listing and final determination is available only by filing a petition for review in the U.S. Court of Appeals for the District of Columbia Circuit by December 10, 2007. Under section 307(d)(7)(B) of the CAA, only an objection to the final determination that was raised with reasonable specificity during the period for public comment can be raised during judicial review.

Organization of This Document

The information presented in this document is organized as follows:

I. Background Information
A. The Ozone Problem
B. Statutory and Regulatory Background
C. Significance of CTGs
II. Summary of Changes to the Final CTGs
A. Paper, Film, and Foil Coatings
B. Metal Furniture Coatings and Large Appliance Coatings
III. Responses to Significant Comments on EPA's Determination
IV. Statutory and Executive Order (EO) Reviews
A. Executive Order 12866: Regulatory Planning and Review

B. Paperwork Reduction Act
C. Regulatory Flexibility Act
D. Unfunded Mandates Reform Act
E. Executive Order 13132: Federalism
F. Executive Order 13175: Consultation and Coordination With Indian Tribal Governments
G. Executive Order 13045: Protection of Children From Environmental Health and Safety Risks
H. Executive Order 13211: Actions Concerning Regulations That Significantly Affect Energy Supply, Distribution, or Use
I. National Technology Transfer and Advancement Act
J. Executive Order 12898: Federal Actions To Address Environmental Justice in Minority Populations and Low-Income Populations
K. Congressional Review Act

I. Background Information

A. The Ozone Problem

Ground-level ozone, a major component of smog, is formed in the atmosphere by reactions of volatile organic compounds (VOC) and oxides of nitrogen in the presence of sunlight. The formation of ground-level ozone is a complex process that is affected by many variables.

Exposure to ground-level ozone is associated with a wide variety of human health effects, as well as agricultural crop loss, and damage to forests and ecosystems. Controlled human exposure studies show that acute health effects are induced by short-term (1 to 2 hour) exposures (observed at concentrations as low as 0.12 parts per million (ppm)), generally while individuals are engaged in moderate or heavy exertion, and by prolonged (6 to 8 hour) exposures to ozone (observed at concentrations as low as 0.08 ppm and possibly lower), typically while individuals are engaged in moderate exertion. Transient effects from acute exposures include pulmonary inflammation, respiratory symptoms, effects on exercise performance, and increased airway responsiveness. Epidemiological studies have shown associations between ambient ozone levels and increased susceptibility to respiratory infection, increased hospital admissions and emergency room visits. Groups at increased risk of experiencing elevated exposures include active children, outdoor workers, and others who regularly engage in outdoor activities. Those most susceptible to the effects of ozone include those with preexisting respiratory disease, children, and older adults. The literature suggests the possibility that long-term exposures to ozone may cause chronic health effects (e.g., structural damage to lung tissue and accelerated decline in baseline lung function).

B. Statutory and Regulatory Background

Under section 183(e) of the CAA, EPA conducted a study of VOC emissions from the use of consumer and commercial products to assess their potential to contribute to levels of ozone that violate the National Ambient Air Quality Standards (NAAQS) for ozone, and to establish criteria for regulating VOC emissions from these products. Section 183(e) of the CAA directs EPA to list for regulation those categories of products that account for at least 80 percent of the VOC emissions, on a reactivity-adjusted basis, from consumer and commercial products in areas that violate the NAAQS for ozone (i.e., ozone nonattainment areas), and to divide the list of categories to be regulated into four groups. EPA published the initial list in the **Federal Register** on March 23, 1995 (60 FR 15264). In that notice, EPA stated that it may amend the list of products for regulation, and the groups of product categories, in order to achieve an effective regulatory program in accordance with the Agency's discretion under CAA section 183(e).

EPA has revised the list several times. See 70 FR 69759 (November 17, 2005); 64 FR 13422 (March 18, 1999). Most recently, in May 2006, EPA revised the list to add one product category, portable fuel containers, and to remove one product category, petroleum dry cleaning solvents. See 71 FR 28320 (May 16, 2006). As a result of these revisions, Group III of the list comprises five product categories: portable fuel containers; aerosol spray paints; paper, film, and foil coatings; metal furniture coatings; and large appliance coatings. Pursuant to the court's order in *Sierra Club* v. *EPA,* 1:01–cv–01597–PLF (D.C. Cir., March 31, 2006), EPA must take final action on the product categories in Group III by September 30, 2007. The portable fuel containers and aerosol spray paints categories are addressed in separate rulemaking actions.[1] The remaining three categories in Group III are the subject of this action. On July 10, 2007, EPA published its proposed determination that a CTG is substantially as effective as a regulation for each of these three categories and announced availability of draft CTGs for paper, film, and foil coatings; metal furniture coating; and large appliance coatings. See 72 FR 37582.

Any regulations issued under CAA section 183(e) must be based on ''best available controls (BAC).'' CAA section 183(e)(1)(A) defines BAC as ''the degree of emissions reduction that the Administrator determines, on the basis of technological and economic feasibility, health, environmental, and energy impacts, is achievable through the application of the most effective equipment, measures, processes, methods, systems or techniques, including chemical reformulation, product or feedstock substitution, repackaging, and directions for use, consumption, storage, or disposal.'' CAA section 183(e) also provides EPA with authority to use any system or systems of regulation that EPA determines is the most appropriate for the product category. Under these provisions, EPA has previously issued ''national'' regulations for autobody refinishing coatings, consumer products, architectural coatings, and portable fuel containers.[2]

CAA section 183(e)(3)(C) further provides that EPA may issue a CTG in lieu of a national regulation for a product category where EPA determines that the CTG will be ''substantially as effective as regulations'' in reducing emissions of VOC in ozone nonattainment areas. The statute does not specify how EPA is to make this determination, but does provide a fundamental distinction between national regulations and CTGs.

Specifically, for national regulations, CAA section 183(e) defines regulated entities as:

> (i) * * * manufacturers, processors, wholesale distributors, or importers of consumer or commercial products for sale or distribution in interstate commerce in the United States; or (ii) manufacturers, processors, wholesale distributors, or importers that supply the entities listed under clause (i) with such products for sale or distribution in interstate commerce in the United States.

Thus, under CAA section 183(e), a regulation for consumer or commercial products is limited to measures applicable to manufacturers, processors, distributors, or importers of consumer and commercial products supplied to the consumer or industry. CAA section 183(e) does not authorize EPA to issue national regulations that would directly regulate end-users of these products. By contrast, CTGs are guidance documents that recommend reasonably available control technology (RACT) measures that States can adopt and apply to the end users of products. This dichotomy

[1] EPA promulgated a national regulation that addresses VOC emissions from portable fuel containers on February 26, 2007 (72 FR 8428). National VOC emission standards for aerosol coatings currently are under development.

[2] See 63 FR 48806, 48819, and 48848 (September 11, 1998); and 72 FR 8428 (February 26, 2007).

(i.e., that EPA cannot directly regulate end-users under CAA section 183(e), but can address end-users through a CTG) created by Congress is relevant to EPA's evaluation of the relative merits of a national regulation versus a CTG.

C. Significance of CTGs

CAA section 172(c)(1) provides that state implementation plans (SIPs) for nonattainment areas must include ''reasonably available control measures (RACM),'' including RACT, for sources of emissions. CAA section 182(b)(2)(A) provides that for certain nonattainment areas, States must revise their SIPs to include RACT for each category of VOC sources covered by a CTG document issued between November 15, 1990, and the date of attainment. States subject only to the RACT requirements in CAA section 172(c)(1) may take action in response to this guidance, as necessary to achieve attainment of the national primary ambient air quality standards.

EPA defines RACT as ''the lowest emission limitation that a particular source is capable of meeting by the application of control technology that is reasonably available considering technological and economic feasibility, 44 FR 53761 (September 17, 1979).'' In subsequent notices, EPA has addressed how States can meet the RACT requirements of the Act. Significantly, RACT for a particular industry is determined on a case-by-case basis, considering issues of technological and economic feasibility.

EPA provides States with guidance concerning what types of controls could constitute RACT for a given source category through issuance of a CTG. The recommendations in the CTG are based on available data and information and may not apply to a particular situation based upon the circumstances of a specific source. States can follow the CTG and adopt State regulations to implement the recommendations contained therein, or they can adopt alternative approaches. In either event, States must submit their RACT rules to EPA for review and approval as part of the SIP process. EPA will evaluate the rules and determine, through notice and comment rulemaking in the SIP approval process, whether the submitted rules meet the RACT requirements of the CAA and EPA's regulations. To the extent a State adopts any of the recommendations in a CTG into its State RACT rules, interested parties can raise questions and objections about the substance of the guidance and the appropriateness of the application of the guidance to a particular situation during the development of the State rules and EPA's SIP approval process.

We encourage States in developing their RACT rules to consider carefully the facts and circumstances of the particular sources in their States because, as noted above, RACT is determined on a case-by-case basis, considering issues of technological and economic feasibility. For example, a State may decide not to require 90 percent control efficiency at facilities that are already well controlled, if the additional emission reductions would not be cost-effective. States may also want to consider reactivity-based approaches, as appropriate, in developing their RACT regulations.[3] Finally, if States consider requiring more stringent VOC content limits than those recommended in the CTGs, States may also wish to consider averaging, as appropriate. In general, the RACT requirement is applied on a short-term basis up to 24 hours.[4] However, EPA guidance addresses averaging times longer than 24 hours under certain conditions.[5] The EPA's ''Economic Incentive Policy''[6] provides guidance on use of long-term averages with regard to RACT and generally provides for averaging times of no greater than 30 days. Thus, if the appropriate conditions are present, States may wish to consider the use of averaging in conjunction with more stringent limits. Because of the nature of averaging, however, we would expect that any State RACT Rules that allow for averaging also include appropriate recordkeeping and reporting requirements.

By this action, we are issuing final CTGs that cover three product categories in Group III of the CAA section 183(e) list. These CTGs are guidance to the States and provide recommendations only. A State can determine what constitutes RACT for these three product categories, and EPA will review the State's rules reflecting RACT in the context of the SIP process and determine whether those rules meet the RACT requirements of the Act and its implementing regulations.

Finally, CAA section 182(b)(2) provides that a CTG issued after 1990 specify the date by which a State must submit a SIP revision in response to the CTG. In the CTGs at issue here, EPA provides that States should submit their SIP revisions within 1 year of the date that the CTGs are finalized.

II. Summary of Changes to the Final CTGs

A. Paper, Film, and Foil Coatings

The final CTG has been revised to provide separate applicability recommendations for coating operations and cleaning operations. For coating operations, we have changed the applicability recommendation to apply to individual coating lines. Specifically, we recommend that the control measures recommended in the final CTG apply to any coating line with the potential to emit 25 tons or more per year (tpy) of VOC, before consideration of control. This applicability level for coating operations is the same applicability level that we recommended for coatings, inks and adhesives in the final CTG for flexible package printing and for heatset dryers in the final CTG for offset lithographic printing and letterpress printing.

We made this change in response to a comment that the cost of using add-on controls to control coating emissions from an individual coating line with potential to emit of 3 tpy would be unreasonable compared to the emission reduction that would be achieved and that it would be even more costly to control multiple coating lines with total potential to emit of 3 tpy. The commenter provided information on the cost of controlling an individual coating line with the potential to emit 3 tpy. The commenter also provided information on the cost of controlling an individual coating line with the potential to emit 25 tpy. We agree with the commenter that, for purposes of recommending an applicability threshold for add-on controls, it is more appropriate to examine the cost of add-on control for a single coating line than the cost of add-on control for all of the coating lines at a facility because the number of coating lines at a facility varies. Based on the information provided by the commenter and similar cost analyses we performed during the development of the CTG for flexible package printing and the CTG for offset lithographic printing and letterpress printing, we conclude that add-on

[3] ''Interim Guidance on Control of Volatile Organic Compounds in Ozone State Implementation Plans,'' 70 FR 54046 (September 13, 2005).

[4] See, e.g., 52 FR at 45108, col. 2, ''Compliance Periods'' (November 24, 1987). ''VOC rules should describe explicitly the compliance timeframe associated with each emission limit (e.g., instantaneous or daily). However, where the rules are silent on compliance time, EPA will interpret it as instantaneous.''

[5] Memorandum from John O'Connor, Acting Director of the Office of Air Quality Planning and Standards, January 20, 1984, ''Averaging Times for Compliance with VOC Emission Limits—SIP Revision Policy.''

[6] ''Improving Air Quality with Economic Incentive Programs, January 2001,'' available at *http://www.epa.gov/region07/programs/artd/air/policy/search.htm.*

control for a coating line with the potential to emit 25 or more tpy will generally be cost effective and that add-on control for a coating line with the potential to emit below 25 tpy will generally be too costly for the emission reduction that would be achieved.

We continue to recommend that the final CTG work practice recommendations for cleaning apply to paper, film and foil coating facilities with actual emissions of 6.8 kg/day (15 lb/day) or more, before consideration of controls, from all covered paper, film and foil coating operations and related cleaning activities at the facility. Since work practices are carried out on a facility-wide basis, we believe it is most appropriate for the applicability of work practices to be determined on a facility-wide basis.

We expect the change to our applicability recommendation, as reflected in the final CTGs, to have little, if any, effect on VOC emission reductions from this category. Because the majority of emissions from paper, film, and foil coating come from coating lines emitting more than 25 tpy VOC before consideration of control, we anticipate that the change to our applicability recommendation in the final CTG will have a negligible impact on the VOC emission reduction estimates presented at proposal. Therefore, our determination that the CTG will be substantially as effective as a national regulation for this category is not affected by this change.

We have also clarified in the final CTG that (1) daily within-line averaging, and (2) using low VOC coatings in conjunction with capture and control devices are viable options for achieving the recommended limits for coating operations in the final CTG. These types of compliance options were available in the 1977 CTG and are present in most existing RACT regulations.

B. Metal Furniture Coatings and Large Appliance Coatings

EPA has changed the low VOC content coatings recommendation in both the final metal furniture coatings CTG and the final large appliance coatings CTG. The draft CTGs for these product categories recommended an emissions limit of 0.275 kg VOC/l (2.3 lbs/gal) of coating, excluding water and exempt compounds, as applied. This recommendation was based on the California South Coast Air Quality Management District (South Coast) regulations limiting VOC emissions from general purpose baked coatings used in metal products coating operations. Based on the public comments, we determined that the recommendation in the draft CTG may inadvertently exclude certain coatings that are needed in the metal furniture and large appliance industries. Therefore, in the final CTGs, we have added to our recommendations other provisions of the South Coast regulation, which is the regulation that formed the basis of our recommendations in the draft CTGs. The additional provisions of the South Coast regulation that we are now recommending include separate VOC limits for certain specialty coatings and exemptions for certain specialty coating operations. We believe that these other provisions of the South Coast regulation are necessary to accommodate the range of coatings that are needed in the metal furniture and large appliance industries.

Specifically, consistent with the South Coast regulation, the final CTGs for metal furniture coatings and large appliance coatings include separate recommended limits for baked coatings and air-dried coatings in the following categories: general, one component; general, multi-component; extreme high gloss; extreme performance; heat resistant; metallic; pretreatment; and solar absorbent. Also, consistent with the South Coast regulation, EPA recommends that the following types of specialty coatings and coating operations be exempt from VOC content limits: stencil coatings; safety-indicating coatings; solid-film lubricants; electric-insulating and thermal-conducting coatings; touch-up and repair coatings; and coating application utilizing hand-held aerosol cans. Further details of these recommendations can be found in the CTGs.

Because the majority of liquid coatings used in metal furniture and large appliance coating operations fall into the ''general, one component'' coatings category, for which the recommended limits are unchanged from the limit recommended in the draft CTGs, we do not anticipate that the changes made in the final CTG will significantly alter the VOC emission reduction estimates presented at proposal. Therefore, the changes described above do not affect our determination that CTGs will be substantially as effective as national regulations for metal furniture coatings and large appliance coating.

We have also clarified in the final CTGs that (1) daily within-coating unit averaging, and (2) using low VOC coatings in conjunction with capture and control devices are viable options for achieving the recommended limits for coating operations in the final CTGs. These types of compliance options were available in the 1977 CTGs and are present in most existing RACT regulations.

III. Responses to Significant Comments on EPA's Determination

With the exception of one commenter, all other commenters that addressed EPA's proposed CAA section 183(e)(3)(C) determination that CTGs will be substantially as effective as national regulations in reducing emissions of VOC in ozone nonattainment areas from the three product categories associated with this action agreed with the proposed determination.

In support of the proposed determination and use of CTGs, commenters remarked that the CTG approach would afford industry flexibility to achieve VOC emission reductions while not compromising their ability to meet customer needs. We also received specific comments agreeing with EPA's position that State regulation of facilities that apply the coatings covered by the CTGs will result in a greater volume of emission reductions than would limiting the VOC content of the products through a national regulation. Finally, we received comments noting that the use of CTGs allows States greater flexibility to tailor regulatory requirements to their specific circumstances. The commenter stated that site-specific factors necessitate the need for flexible controls. Because there can be great variation in the operations of facilities and the environmental conditions in which they operate, State regulators should be granted some latitude to fashion control strategies to address the variables that are inherent to the formation of ground-level ozone in their States. The commenter concluded that the CTG approach affords this flexibility by allowing the use of a variety of mechanisms to achieve emission reductions, including the use of low-VOC coatings, add-on control devices, work practice standards, restrictive permitting, averaging of materials, and vapor pressure and reactivity measures.

The only adverse comment on the determination that we received asserted that CTGs will not be effective because they are voluntary measures. We disagree with the commenter. CAA section 183(e)(3)(C) specifically authorizes EPA to issue CTGs, which are guidance, in lieu of national regulations if EPA determines that the CTGs will be as substantially as effective as regulations in reducing emissions of VOC in ozone nonattainment areas. In our proposal, we presented the rationale for our determination that a CTG is

substantially as effective as a rule for each of the three categories here. The commenter raised no concerns or issues with that rationale. Furthermore, the commenter is incorrect in comparing CTGs to voluntary measures. As discussed in section I.B. of this notice, the CTGs contain recommendations. Certain States must revise their SIP to include RACT for paper film and foil coatings, metal furniture coatings, and large appliance coatings, as a result of EPA's issuance of the CTGs for these three categories. The CTGs provide States with guidance from EPA concerning the types of controls that could constitute RACT for these three product categories. Because the recommendations in the CTG are based on available data and information, they may not apply to a particular situation based upon the circumstances. States have the flexibility to either adopt EPA's recommendations in the CTGs as RACT or develop alternative approaches that are better suited for the sources within their States. In either event, States must submit their RACT rules to EPA for review and approval as part of the notice and comment SIP process. Finally, Congress was well aware of the nature and structure of CTGs when it included CAA section 183(e)(3)(C) in the statute, affording EPA the opportunity to issue CTGs in lieu of national regulations. EPA acted consistently with the CAA in issuing the determination, and the commenter has not challenged the rationale that EPA provided in support of that determination.

IV. Statutory and Executive Order (EO) Reviews

A. Executive Order 12866: Regulatory Planning and Review

Under EO 12866 (58 FR 51735, October 4, 1993), this action is a ''significant regulatory action,'' since it is deemed to raise novel legal or policy issues. Accordingly, EPA submitted this action to the Office of Management and Budget (OMB) for review under EO 12866, and any changes made in response to OMB recommendations have been documented in the docket for this action.

B. Paperwork Reduction Act

This action does not impose an information collection burden under the provisions of the Paperwork Reduction Act (44 U.S.C. 3501 *et seq.*). This action does not contain any information collection requirements.

Burden means the total time, effort, or financial resources expended by persons to generate, maintain, retain, or disclose or provide information to or for a Federal Agency. This includes the time needed to review instructions; develop, acquire, install, and utilize technology and systems for the purposes of collecting, validating, and verifying information, processing and maintaining information, and disclosing and providing information; adjust the existing ways to comply with any previously applicable instructions and requirements; train personnel to be able to respond to a collection of information; search data sources; complete and review the collection of information; and transmit or otherwise disclose the information.

An agency may not conduct or sponsor, and a person is not required to respond to a collection of information unless it displays a currently valid OMB control number. The OMB control numbers for EPA's regulations in 40 CFR are listed in 40 CFR part 9.

C. Regulatory Flexibility Act

The Regulatory Flexibility Act (RFA) generally requires an agency to prepare a regulatory flexibility analysis of any rule subject to notice and comment rulemaking requirements under the Administrative Procedure Act or any other statute unless the agency certifies that the rule will not have a significant economic impact on a substantial number of small entities. Small entities include small businesses, small organizations, and small governmental jurisdictions.

For purposes of assessing the impacts of this rule on small entities, small entity is defined as: (1) A small business as defined by the Small Business Administration's (SBA) regulations at 13 CFR 121.201; (2) a small governmental jurisdiction that is a government of a city, county, town, school district, or special district with a population of less than 50,000; and (3) a small organization that is any not-for-profit enterprise which is independently owned and operated and is not dominant in its field.

After considering the economic impacts of this final rule on small entities, I certify that this action will not have a significant economic impact on a substantial number of small entities. This final rule will not impose any requirements on small entities. EPA is taking final action to list the three Group III consumer and commercial product categories addressed in this notice for purposes of CAA section 183(e) of the Act. The listing action alone does not impose any regulatory requirements. EPA has also determined that, for each of the three product categories at issue, a CTG will be substantially as effective as a national regulation in achieving VOC emission reductions in ozone nonattainment areas. This final determination means that EPA has concluded that it is not appropriate to issue Federal regulations under CAA section 183(e) to regulate VOC emissions from these three product categories. Instead, EPA has concluded that it is appropriate to issue guidance in the form of CTGs that provide recommendations to States concerning potential methods to achieve needed VOC emission reductions from these product categories. In addition to the final determination, EPA is also announcing availability of the final CTGs for these three product categories. These CTGs are guidance documents. EPA does not directly regulate any small entities through the issuance of a CTG. Instead, EPA issues CTG to provide States with guidance on developing appropriate regulations to obtain VOC emission reductions from the affected sources within certain nonattainment areas. EPA's issuance of a CTG does trigger an obligation on the part of certain States to issue State regulations, but States are not obligated to issue regulations identical to the Agency's CTG. States may follow the guidance in the CTG or deviate from it, and the ultimate determination of whether a State regulation meets the RACT requirements of the CAA would be determined through notice and comment rulemaking in the Agency's action on each State's State Implementation Plan. Thus, States retain discretion in determining to what degree to follow the CTGs.

D. Unfunded Mandates Reform Act

Title II of the Unfunded Mandates Reform Act of 1995 (UMRA), P.L. 104–4, establishes requirements for Federal agencies to assess the effects of their regulatory actions on State, local, and tribal governments and the private sector. Under section 202 of the UMRA, EPA generally must prepare a written statement, including a cost-benefit analysis, for proposed and final rules with ''Federal mandates'' that may result in expenditures to State, local, and tribal governments, in the aggregate, or to the private sector, of $100 million or more in any one year. Before promulgating an EPA rule for which a written statement is needed, section 205 of the UMRA generally requires EPA to identify and consider a reasonable number of regulatory alternatives and to adopt the least costly, most cost-effective or least burdensome alternative that achieves the objectives of the rule. The provisions of section 205 do not apply when they are inconsistent with

applicable law. Moreover, section 205 allows EPA to adopt an alternative other than the least costly, most cost-effective or least burdensome alternative if the Administrator publishes with the final rule an explanation why that alternative was not adopted. Before EPA establishes any regulatory requirements that may significantly or uniquely affect small governments, including tribal governments, it must have developed under section 203 of the UMRA a small government agency plan. The plan must provide for notifying potentially affected small governments, enabling officials of affected small governments to have meaningful and timely input in the development of EPA regulatory proposals with significant Federal intergovernmental mandates, and informing, educating, and advising small governments on compliance with the regulatory requirements.

This rule contains no Federal mandates (under the regulatory provisions of Title II of the UMRA) for State, local, or tribal governments or the private sector because they impose no enforceable duty on any State, local, or tribal governments or the private sector. (**Note**: The term ''enforceable duty'' does not include duties and conditions in voluntary Federal contracts for goods and services.) Thus, this rule is not subject to the requirements of sections 202 and 205 of the UMRA. In addition, we have determined that this rule contains no regulatory requirements that might significantly or uniquely affect small governments because they contain no regulatory requirements that apply to such governments or impose obligations upon them. Therefore, this action is not subject to the requirements of section 203 of UMRA.

E. Executive Order 13132: Federalism

Executive Order 13132, entitled ''Federalism'' (64 FR 43255, August 10, 1999), requires EPA to develop an accountable process to ensure ''meaningful and timely input by State and local officials in the development of regulatory policies that have federalism implications.'' ''Policies that have federalism implications'' is defined in the EO to include regulations that have ''substantial direct effects on the States, on the relationship between the national government and the States, or on the distribution of power and responsibilities among the various levels of government.''

This final rule does not have federalism implications. It will not have substantial direct effects on the States, on the relationship between the national government and the States, or on the distribution of power and responsibilities among the various levels of government, as specified in Executive Order 13132. The CAA establishes the relationship between the Federal Government and the States, and this action does not impact that relationship. Thus, Executive Order 13132 does not apply to this rule. However, in the spirit of EO 13132, and consistent with EPA policy to promote communications between EPA and State and local governments, EPA solicited comments from State and local officials. EPA received no adverse comments from State or local governments on these issues.

F. Executive Order 13175: Consultation and Coordination With Indian Tribal Governments

Executive Order 13175, entitled ''Consultation and Coordination With Indian Tribal Governments'' (65 FR 67249, November 9, 2000), requires EPA to develop an accountable process to ensure ''meaningful and timely input by Tribal officials in the development of regulatory policies that have Tribal implications.''

This final rule does not have Tribal implications, as specified in Executive Order 13175. They do not have a substantial direct effect on one or more Indian Tribes, in that the listing action and the final determination impose no regulatory burdens on tribes. Furthermore, the listing action and the final determination do not affect the relationship or distribution of power and responsibilities between the Federal government and Indian Tribes. The CAA and the Tribal Authority Rule (TAR) establish the relationship of the Federal government and Tribes in implementing the Clean Air Act. Thus, Executive Order 13175 does not apply to this rule.

G. Executive Order 13045: Protection of Children From Environmental Health and Safety Risks

Executive Order 13045, ''Protection of Children from Environmental Health and Safety Risks'' (62 FR 19885, April 23, 1997) applies to any rule that (1) is determined to be ''economically significant'' as defined under EO 12866, and (2) concerns an environmental health or safety risk that EPA has reason to believe may have a disproportionate effect on children. If the regulatory action meets both criteria, the Agency must evaluate the environmental health or safety effects of the planned rule on children, and explain why the planned regulation is preferable to other potentially effective and reasonably feasible alternatives considered by the Agency.

EPA interprets Executive Order 13045 as applying only to those regulatory actions that are based on health and safety risks, such that the analysis required under section 5–501 of the Executive Order has the potential to influence the regulations. This rule is not subject to Executive Order 13045 because it does not establish an environmental standard intended to mitigate health or safety risks.

H. Executive Order 13211: Actions Concerning Regulations That Significantly Affect Energy Supply, Distribution, or Use

This rule is not a ''significant energy action'' as defined in Executive Order 13211, ''Action Concerning Regulations That Significantly Affect Energy Supply, Distribution, or Use'' (66 FR 28355 (May 22, 2001)) because it is not likely to have a significant adverse effect on the supply, distribution, or use of energy. These actions impose no regulatory requirements and are therefore not likely to have any adverse energy effects.

I. National Technology Transfer and Advancement Act

As noted in the proposed rule, Section 12(d) of the National Technology Transfer and Advancement Act of 1995 (NTTAA), Public Law No. 104–113, Section 12(d) (15 U.S.C. 272 note) directs EPA to use voluntary consensus standards in their regulatory activities unless to do so would be inconsistent with applicable law or otherwise impractical. Voluntary consensus standards are technical standards (e.g., materials specifications, test methods, sampling procedures, business practices, etc.) that are developed or adopted by voluntary consensus standards bodies. The NTTAA directs EPA to provide Congress, through OMB, with explanations when the Agency does not use available and applicable voluntary consensus standards.

This action does not involve technical standards. Therefore, EPA did not consider the use of any voluntary consensus standards.

J. Executive Order 12898: Federal Actions To Address Environmental Justice in Minority Populations and Low-Income Populations

Executive Order 12898 (59 FR 7629 (Feb. 16, 1994)) establishes Federal executive policy on environmental justice. Its main provision directs Federal agencies, to the greatest extent practicable and permitted by law, to make environmental justice part of their mission by identifying and addressing,

as appropriate, disproportionately high and adverse human health or environmental effects of their programs, policies, and activities on minority populations and low-income populations in the United States.

EPA has determined that the listing action and the final determination will not have disproportionately high and adverse human health or environmental effects on minority or low-income populations because it increases the level of environmental protection to populations in affected ozone nonattainment areas without having any disproportionately high and adverse human health or environmental effects on any populations, including any minority or low-income populations. The purpose of section 183(e) is to obtain VOC emission reductions to assist in the attainment of the ozone NAAQS. The health and environmental risks associated with ozone were considered in the establishment of the ozone NAAQS. The level is designed to be protective of the public with an adequate margin of safety. EPA's listing of the products and its determination that CTGs are substantially as effective as regulations are actions intended to help States achieve the NAAQS in the most appropriate fashion.

K. Congressional Review Act

The Congressional Review Act, 5 U.S.C. 801 *et seq.*, as added by the Small Business Regulatory Enforcement Fairness Act of 1996, generally provides that before a rule may take effect, the agency promulgating the rule must submit a rule report, which includes a copy of the rule, to each House of the Congress and to the Comptroller General of the United States. EPA will submit a report containing this notice and other required information to the U.S. Senate, the U.S. House of Representatives, and the Comptroller General of the United States prior to publication of the notice in the **Federal Register**. A major rule cannot take effect until 60 days after it is published in the **Federal Register**. This action is not a ''major rule'' as defined by 5 U.S.C. 804(2). This rule will be effective October 9, 2007.

List of Subjects in 40 CFR Part 59

Air pollution control, Consumer and commercial products, Confidential business information, Ozone, Reporting and recordkeeping requirements, Volatile organic compounds.

Dated: September 28, 2007.

Stephen L. Johnson,

Administrator.

■ For the reasons stated in the preamble, title 40, chapter I of the Code of Federal Regulations is amended as follows:

PART 59—[AMENDED]

■ 1. The authority citation for part 59 continues to read as follows:

Authority: 42 U.S.C. 7414 and 7511b(e).

Subpart A—General

■ 2. Section 59.1 is revised to read as follows:

§ 59.1 Final determinations under section 183(e)(3)(C) of the Clean Air Act.

This section identifies the consumer and commercial product categories for which EPA has determined that control techniques guidelines (CTGs) will be substantially as effective as regulations in reducing volatile organic compound (VOC) emissions in ozone nonattainment areas:

(a) Wood furniture coatings;
(b) Aerospace coatings;
(c) Shipbuilding and repair coatings;
(d) Lithographic printing materials;
(e) Letterpress printing materials;
(f) Flexible packaging printing materials;
(g) Flat wood paneling coatings;
(h) Industrial cleaning solvents;
(i) Paper, film, and foil coatings;
(j) Metal furniture coatings; and
(k) Large appliance coatings.

[FR Doc. E7–19627 Filed 10–5–07; 8:45 am]

BILLING CODE 6560–50–P

ENVIRONMENTAL PROTECTION AGENCY

40 CFR Part 721

[EPA–HQ–OPPT–2005–0015; FRL–8150–4]

RIN 2070–AJ18

Perfluoroalkyl Sulfonates; Significant New Use Rule

AGENCY: Environmental Protection Agency (EPA).

ACTION: Final rule.

SUMMARY: EPA is amending a significant new use rule (SNUR) under section 5(a)(2) of the Toxic Substances Control Act (TSCA) to include certain additional perfluoroalkyl sulfonate (PFAS) chemicals. EPA is amending the PFAS SNUR at 40 CFR 721.9582 by adding a new Table 3 which includes the PFAS chemicals currently on the public TSCA Inventory that are not already covered by the SNUR. This rule requires manufacturers, including importers, to notify EPA at least 90 days before commencing the manufacture or import of the PFAS chemicals listed in Table 3 of the regulatory text for the significant new uses described in this document on or after November 8, 2007. EPA believes that this action is appropriate because these chemical substances may be hazardous to human health and the environment. This required notice will provide EPA the opportunity to evaluate intended significant new uses and associated activities before they occur and, if necessary, to prohibit or limit those uses or activities.

DATES: This final rule is effective November 8, 2007.

ADDRESSES: EPA has established a docket for this action under docket identification (ID) number EPA–HQ–OPPT–2005–0015. All documents in the docket are listed in the docket index available in regulations.gov. To access the electronic docket, go to *http://www.regulations.gov*, select ''Advanced Search,'' then ''Docket Search.'' Insert the docket ID number where indicated and select the ''Submit'' button. Follow the instructions on the regulations.gov website to view the docket index or access available documents. Although listed in the index, some information is not publicly available, e.g., Confidential Business Information (CBI) or other information whose disclosure is restricted by statute. Certain other material, such as copyrighted material, will be publicly available only in hard copy. Publicly available docket materials are available electronically at *http://www.regulations.gov*, or, if only available in hard copy, at the OPPT Docket. The OPPT Docket is located in the EPA Docket Center (EPA/DC) at Rm. 3334, EPA West Bldg., 1301 Constitution Ave., NW., Washington, DC. The EPA/DC Public Reading Room hours of operation are 8:30 a.m. to 4:30 p.m., Monday through Friday, excluding Federal holidays. The telephone number of the EPA/DC Public Reading Room is (202) 566–1744, and the telephone number for the OPPT Docket is (202) 566–0280. Docket visitors are required to show photographic identification, pass through a metal detector, and sign the EPA visitor log. All visitor bags are processed through an X-ray machine and subject to search. Visitors will be provided an EPA/DC badge that must be visible at all times in the building and returned upon departure.

FOR FURTHER INFORMATION CONTACT: *For general information contact*: Colby Lintner, Regulatory Coordinator, Environmental Assistance Division (7408M), Office of Pollution Prevention

and Toxics, Environmental Protection Agency, 1200 Pennsylvania Ave., NW., Washington, DC 20460–0001; telephone number: (202) 554–1404; e-mail address: *TSCA-Hotline@epa.gov*.

For technical information contact: Amy Breedlove, Chemical Control Division (7405M), Office of Pollution Prevention and Toxics, Environmental Protection Agency, 1200 Pennsylvania Ave., NW., Washington, DC 20460–0001; telephone number: (202) 564–9823; e-mail address: *breedlove.amy@epa.gov*.

SUPPLEMENTARY INFORMATION:

I. Does this Action Apply to Me?

You may be potentially affected by this action if you manufacture or import any of the chemical substances that are listed in Table 3 of the regulatory text. This action may also affect certain entities through pre-existing import certification and export notification rules under TSCA. Persons who import any chemical substance governed by a final SNUR are subject to the TSCA section 13 (15 U.S.C. 2612) import certification requirements and the corresponding regulations at 19 CFR 12.118 through 12.127 and 127.28. Those persons must certify that the shipment of the chemical substance complies with all applicable rules and orders under TSCA, including any SNUR requirements. The EPA policy in support of import certification appears at 40 CFR part 707, subpart B. In addition, any persons who export or intend to export a chemical substance that is the subject of this rule are subject to the export notification provisions of TSCA section 12(b)(15 U.S.C. 2611(b))(see 40 CFR 721.20), and must comply with the export notification requirements in 40 CFR part 707, subpart D. Potentially affected entities may include, but are not limited to:

- Manufacturers (defined by statute to include importers) or chemical exporters of one or more of the subject chemical substances (NAICS codes 325 and 324110), e.g., chemical manufacturing and petroleum refineries.
- Establishments (NAICS code 332813), e.g., primarily engaged in electroplating, plating, anodizing, coloring, buffing, polishing, cleaning, and sandblasting metals and metal products.

This listing is not intended to be exhaustive, but rather provides a guide for readers regarding entities likely to be affected by this action. Other types of entities not listed in this unit could also be affected. The North American Industrial Classification System (NAICS) codes have been provided to assist you and others in determining whether this action might apply to certain entities. To determine whether you or your business may be affected by this action, you should carefully examine the applicability provisions in 40 CFR 721.5 and 40 CFR 721.9582 as described herein. Also consult Unit II. If you have any questions regarding the applicability of this action to a particular entity, consult the technical person listed under **FOR FURTHER INFORMATION CONTACT**.

II. Background

In the **Federal Register** of March 10, 2006 (71 FR 12311) (FRL–7740–6), EPA proposed to add 183 PFAS chemicals to the SNUR at 40 CFR 721.9582. The 183 chemicals being added to the SNUR are listed in Table 3 in the regulatory text of this document. The chemicals listed in Table 3 are on the public TSCA Inventory and have the characteristic PFAS chemical structure of a perfluorinated carbon chain (Rf) greater than, or equal to, C5 attached to an SO2 group connected to the rest of the molecule. In addition, the proposal also included those chemicals with Rf ranges of perfluorinated carbon chains shorter than C5, and greater than C5, for example, C4–C12 and C6–C12. In this SNUR, this PFAS chemical structure is referred to as the Rf moiety. EPA believed the action was warranted given the similarity of these chemicals to those currently included in 40 CFR 721.9582 and the strong likelihood of similar health and environmental concerns, as discussed in Unit III. of the March 10, 2006 document. EPA also proposed to make the excepted uses described in 40 CFR 721.9582(a)(3) applicable to the chemicals listed in Table 3 of the proposed regulatory text.

A. What Action is the Agency Taking?

The Agency is designating as a ''significant new use'' the manufacture, including import, of the chemical substances listed in Table 3 of the regulatory text, for any use, except for the excluded uses described in this unit. Based on comments received during the public comment period and related communications, EPA learned of an ongoing use of seven PFAS chemicals as a component of an etchant used in the plating process to produce electronic devices. Consequently, that use has been excluded from this SNUR for those seven chemicals. See § 721.9582(a)(5) or the discussion in this unit of the significant new uses for a list of those chemicals.

In addition, the public comments described the ongoing use of PFAS chemicals as a fume/mist suppressant in metal finishing and plating baths. However, based on searches of the Internet which generated information on PFAS from the Organization for Economic Cooperation and Development (OECD), industry, and information from the California Air Resources Board (Refs. 1 and 2), EPA has concluded that only one chemical in Table 3, tetraethylammonium perfluorooctanesulfonate (CAS No. 56773–42–3), is used in this application. Therefore, EPA has excluded that use of this chemical from this SNUR. However, EPA remains concerned about this use, because at least two commenters to this SNUR noted that small quantities of this PFAS surfactant are released in the routine renewal of the plating baths. In addition, since the close of the public comment period, EPA has learned from a 2007 survey by Minnesota of over 30 wastewater treatment plants that PFOS, which is the anionic counterion of this PFAS surfactant, is appearing in wastewater treatment plant influent, effluent, and sludge associated with the fume/mist suppressant use in metal finishing and plating baths. As a result of these concerns, although outside the scope of this rule, EPA will continue to work with state agencies and industry to identify best management practices for minimizing the release of this PFAS surfactant.

A chemical fume (or mist) suppressant refers to any chemical agent that reduces or suppresses fumes or mists at the surface of an electroplating bath or solution. Chemical fume suppressants are ''surface-active'' compounds that can be added directly to a chrome plate acid bath to reduce or control misting (Ref. 3). PFAS chemicals are effective fume suppressants because of their surfactant properties. Fume suppressants act by reducing the plating bath surface tension which then inhibits misting. Misting occurs when bubbles break free of a liquid bath's surface and burst in the air. When the surface tension of a bath is lowered, as occurs with the use of PFAS fume suppressants, gases escape at the surface of the plating bath solution with less of a ''bursting'' effect, forming less mist (Ref. 4). Such fume suppressants, as opposed to other chemical surfactants, are used in the plating industry because the PFAS fume suppressant is able to withstand the harsh conditions of plating baths while lowering the plating bath surface tension to levels specified by current regulatory standards (Ref. 5). While several of these PFAS chemicals were developed for this use, only one is being used currently.

The plating fume suppressant that contains tetraethylammonium

perfluorooctanesulfonate (CAS No. 56773–42–3) to reduce surface tension is different than the types of fume suppressants used in the plating industry that produce a foam blanket, and which can be used alone or in conjunction with PFAS fume suppressants.

This rule requires persons to notify EPA at least 90 days before commencing the manufacture (including import) of the chemical substances identified in Table 3 of the regulatory text for any use, except:

- Use as an anti-erosion additive in fire-resistant phosphate ester aviation hydraulic fluids.
- Use as a component of a photoresist substance, including a photo acid generator or surfactant, or as a component of an anti-reflective coating, used in a photomicrolithography process to produce semiconductors or similar components of electronic or other miniaturized devices.
- Use in coating for surface tension, static discharge, and adhesion control for analog and digital imaging films, papers, and printing plates, or as a surfactant in mixtures used to process imaging films.
- Use of: 1-Pentanesulfonic acid, 1,1,2,2,3,3,4,4,5,5,5-undecafluoro-, potassium salt (CAS No. 3872–25–1); Glycine, N-ethyl-N-[(tridecafluorohexyl)sulfonyl]-, potassium salt (CAS No. 67584–53–6); Glycine, N-ethyl-N-[(pentadecafluoroheptyl)sulfonyl]-, potassium salt (CAS No. 67584–62–7); 1-Heptanesulfonic acid, 1,1,2,2,3,3,4,4,5,5,6,6,7,7,7-pentadecafluoro-, ammonium salt (CAS No. 68259–07–4); 1-Heptanesulfonamide, N-ethyl-1,1,2,2,3,3,4,4,5,5,6,6,7,7,7-pentadecafluoro- (CAS No. 68957–62–0); Poly(oxy-1,2-ethanediyl), .alpha.-[2-[ethyl[(pentadecafluoroheptyl) sulfonyl]amino]ethyl]-.omega.-methoxy- (CAS No. 68958–60–1); or 1-Hexanesulfonic acid, 1,1,2,2,3,3,4,4,5,5,6,6,6-tridecafluoro-, compd. with 2,2′-iminobis[ethanol] (1:1) (CAS No. 70225–16–0) as a component of an etchant, including a surfactant or fume suppressant, used in the plating process to produce electronic devices.
- Use of tetraethylammonium perfluorooctanesulfonate (CAS No. 56773–42–3) as a fume/mist suppressant in metal finishing and plating baths. Examples of such metal finishing and plating baths include: Hard chrome plating; decorative chromium plating; chromic acid anodizing; nickel, cadmium, or lead plating; metal plating on plastics; and alkaline zinc plating.
- Use as an intermediate only to produce other chemical substances to be used solely for the uses listed in bullets 1, 2, or 3 of this unit.

B. What is the Agency's Authority for Taking this Action?

Section 5(a)(2) of TSCA (15 U.S.C. 2604(a)(2)) authorizes EPA to determine that a use of a chemical substance is a ''significant new use.'' EPA must make this determination by rule after considering all relevant factors, including those listed in TSCA section 5(a)(2). Once EPA determines that a use of a chemical substance is a significant new use, TSCA section 5(a)(1)(B) requires persons to submit a Significant New Use Notice (SNUN) to EPA at least 90 days before they manufacture, import, or process the chemical substance for that use (15 U.S.C. 2604(a)(1)(B)). The mechanism for reporting under this requirement is established under 40 CFR 721.5.

C. Applicability of General Provisions

General provisions for SNURs appear under 40 CFR part 721, subpart A. These provisions describe persons subject to the rule, recordkeeping requirements, exemptions to reporting requirements, and applicability of the rule to uses occurring before the effective date of the final rule. Provisions relating to user fees appear at 40 CFR part 700. According to 40 CFR 721.1(c), persons subject to this SNUR must comply with the same notice requirements and EPA regulatory procedures as submitters of Premanufacture Notices (PMNs) under TSCA section 5(a)(1)(A). In particular, these requirements include the information submission requirements of TSCA section 5(b) and 5(d)(1), the exemptions authorized by TSCA section 5(h)(1), (h)(2), (h)(3), and (h)(5), and the regulations at 40 CFR part 720. Once EPA receives a SNUN, EPA may take regulatory action under TSCA section 5(e), 5(f), 6 or 7 to control the activities for which it has received the SNUN. If EPA does not take action, EPA is required under TSCA section 5(g) to explain in the **Federal Register** its reasons for not taking action.

Persons who export or intend to export a chemical substance identified in a proposed or final SNUR are subject to the export notification provisions of TSCA section 12(b). The regulations that implement TSCA section 12(b) appear at 40 CFR part 707, subpart D. Persons who import a chemical substance identified in a final SNUR are subject to the TSCA section 13 import certification requirements, which appear at 19 CFR 12.118 through 12.127 and 127.28. Such persons must certify that the shipment of the chemical substance complies with all applicable rules and orders under TSCA, including any SNUR requirements. The EPA policy in support of import certification appears at 40 CFR part 707, subpart B.

III. Objectives and Rationale for this Final Rule

A. Objectives

Based on the considerations in Unit III. of the preamble to the proposed SNUR and in Unit III.B. and Unit IV. of this preamble, by issuing this SNUR, EPA will achieve the following objectives with regard to the significant new uses that are designated in this rule:

- EPA will receive notice of any person's intent to manufacture or import any chemical listed in Table 3 of the regulatory text for the described significant new use before that activity begins.
- EPA will have an opportunity to review and evaluate data submitted in a SNUN before the notice submitter begins to manufacture or import any chemicals listed in Table 3 of the regulatory text for a significant new use.
- EPA will have an opportunity to regulate prospective manufacturers or importers of any chemical listed in Table 3 of the regulatory text before a significant new use of the chemical substance occurs, provided that regulation is warranted pursuant to TSCA sections 5(e), 5(f), 6 or 7.

B. Rationale

EPA has concerns regarding adverse human health and environmental effects of PFAS. It is highly persistent in the environment, it tends to bioaccumulate, and it is toxic. In its voluntary phase-out of perfluorooctane sulfonate (PFOS) and PFOS-related products, the 3M Company, which had been the sole U.S. manufacturer of the chemicals, committed to stop production of all perfluoroalkyl sulfonic acid products with alkyl chain lengths of C8 or greater. 3M completed its phase-out of PFOS production in 2002, which led to a significant reduction in the use of all PFAS-related substances.

Production of the 183 PFAS chemicals in Table 3 is limited to the excluded uses described in 40 CFR 721.9582(a)(3) and in Unit II.A. of this document. Production volumes and exposures have been decreasing. Any manufacture or import for a significant new use is expected to significantly increase exposures beyond levels that now occur. EPA is concerned that manufacture or import of the PFAS chemicals listed in Table 3 of the regulatory text for any uses not

excluded by this SNUR could be reinitiated in the future. The notice required by this SNUR will provide EPA with additional information to evaluate activities associated with a significant new use and to protect against unreasonable risks, if any, from exposure to the substances.

IV. Significant New Use Determination

Section 5(a)(2) of TSCA states that EPA's determination that a use of a chemical substance is a significant new use must be made after consideration of all relevant factors including:

- The projected volume of manufacturing and processing of a chemical substance.
- The extent to which the use changes the type or form of exposure of humans or the environment to a chemical substance.
- The extent to which the use increases the magnitude and duration of exposure of human beings or the environment to a chemical substance.
- The reasonably anticipated manner and methods of manufacturing, processing, distribution in commerce, and disposal of a chemical substance.

TSCA section 5(a)(2) authorizes EPA to consider any other relevant factors in addition to the factors enumerated in the bulleted items.

To determine what would constitute a significant new use of a chemical listed in Table 3 of the regulatory text, EPA considered relevant information about the toxicity of the PFAS substances, likely human exposures and environmental releases associated with possible uses, and the four factors listed in this unit.

As described in Unit III. of the proposed SNUR, EPA has concerns regarding the reproductive and subchronic toxicity, persistence, and bioaccumulative potential of the chemical substances that are included in this SNUR. These concerns lead the Agency to believe that humans and the environment could suffer adverse effects from their use. Any use of these PFAS chemicals would continue to add to the reservoir of perfluoroalkyl sulfonic acids (PFASA) in the environment, resulting in additional human/environmental exposure. There is evidence that PFAS-containing chemicals degrade to perfluoroalkyl sulfonic acids (PFASA), which exist in the anionic form in the environment, or to PFASA precursors.

The latest information available to EPA indicates that the chemicals listed in Table 3 of the regulatory text are no longer being manufactured for any uses other than the excluded uses described in Unit II. of this SNUR. EPA believes that reintroduction of PFAS for any use other than the listed uses EPA has identified could significantly increase the production volume, and the magnitude and duration of exposure to humans and the environment to these chemical substances over that which would otherwise exist. Consequently, EPA wants the opportunity to evaluate and control, if appropriate, exposures associated with those activities before they occur. Based upon the relevant factors discussed in this unit, EPA has determined that the manufacture, including import, of any of the chemicals listed in Table 3 of the regulatory text for any use other than those described in Unit II., is a significant new use.

EPA will continue to evaluate the excluded uses and may pursue additional regulatory action under TSCA, if necessary in the future.

V. Test Data and Other Information

TSCA section 5 does not require the development of any particular test data before submission of a SNUN. Persons are required to submit only test data in their possession or under their control and to describe any other data known to or reasonably ascertainable by them (15 U.S.C. 2604(d); 40 CFR 721.25).

In view of the Agency's concerns regarding activities associated with the significant new use(s) of any chemical listed in Table 3 of the regulatory text, EPA recommends that SNUN submitters include data that would permit a reasoned evaluation of risks posed by the chemical substance during its manufacture, import, processing, use, distribution in commerce, or disposal. EPA encourages persons to consult with the Agency before submitting a SNUN. As part of this optional pre-notice consultation, EPA would discuss specific data it believes may be useful in evaluating a significant new use. SNUNs submitted for significant new uses without any test data may increase the likelihood that EPA will take action under TSCA section 5(e) to prohibit or limit activities associated with the chemical.

SNUN submitters should be aware that EPA will be better able to evaluate SNUNs that provide detailed information on:

- Human exposures and environmental releases that may result from the significant new uses of the chemical substance.
- Potential benefits of the chemical substance.
- Information on risks posed by the chemical substance compared to risks posed by potential substitutes.

VI. SNUN Submissions

SNUNs must be mailed to the Environmental Protection Agency, OPPT Document Control Office (7407M), 1200 Pennsylvania Ave., NW., Washington, DC 20460–0001. Information must be submitted in the form and manner set forth in EPA Form No. 7710–25. This form is available from the Environmental Assistance Division (7408M), 1200 Pennsylvania Ave., NW., Washington, DC 20460–0001 (see 40 CFR 721.25 and 720.40). Forms and information are also available electronically at *http://www.epa.gov/opptintr/newchems/pubs/pmnforms.htm*.

As discussed in Unit V., EPA recommends that submitters consult with the Agency prior to submitting a SNUN to discuss what data may be useful in evaluating a significant new use. Discussions with the Agency prior to submission can afford submitters ample time to conduct any tests that might be helpful in evaluating the risks posed by the substance.

VII. Applicability of Rule to Uses Occurring Before Effective Date of the Final Rule

As discussed in the **Federal Register** of April 24, 1990 (55 FR 17376), EPA has decided that the intent of section 5(a)(1)(B) of TSCA is best served by designating a use as a significant new use as of the date of publication of the proposed rule rather than as of the effective date of the final rule. If uses begun after publication of the proposed rule were considered ongoing rather than new, it would be difficult for EPA to establish SNUR notice requirements, because a person could defeat the SNUR by initiating the proposed significant new use before the rule became final, and then argue that the use was ongoing as of the effective date of the final rule. Thus, persons who may have begun commercial manufacture or import of the chemical substances listed in Table 3 of the regulatory text for the significant new uses listed in this final SNUR after the proposal was published on March 10, 2006, must stop that activity before the effective date of this final rule. To resume their activities, these persons would have to comply with all applicable SNUR notice requirements and wait until the notice review period, including all extensions, expires. EPA has promulgated provisions to allow persons to comply with this SNUR before the effective date. If a person were to meet the conditions of advance compliance under § 721.45(h), that person would be considered to have met the

requirements of the final SNUR for those activities.

VIII. Discussion of the Final Significant New Use Rule and Response to Comments

This action finalizes the SNUR proposed in the **Federal Register** on March 10, 2006 (71 FR 12311). On April 10, 2006 (71 FR 18055) (FRL–7779–7), EPA extended the closing date of the public comment period from April 10, 2006 to May 10, 2006. On May 10, 2006 (71 FR 27217) (FRL–8068–8), EPA further extended the closing date of the comment period from May 10, 2006 to August 8, 2006.

This final rule requires persons who intend to manufacture or import any of the chemical substances listed in Table 3 of the regulatory text for any use other than those excluded uses described in Unit II.A. to submit a SNUN at least 90 days before commencing the manufacture or importation of any of these chemicals.

It should be noted that, in Table 3, some of the chemical names are different from those in the previous proposed SNUR of March 10, 2006. This is due to enhancement of the nomenclature or nomenclature changes adopted by the Chemical Abstracts Service (CAS). CAS is now using the 16th Collective Index (known as the ACI). EPA has updated the previously used 9th Collective Index names to reflect the latest changes by CAS. The CAS numbers and chemicals, however, remain the same. In some cases, the extremely long ACI names have been truncated to save space. Each complete ACI name is available at the EPA website in the TSCA Substance Registry System (SRS) at *http://www.epa.gov/srs*. Also, to be consistent with the other tables already in the SNUR, the order of the listing has been reversed from the descending order used in the proposed SNUR to ascending order used in this final SNUR.

The Agency reviewed and considered all comments received related to the proposed rule. Copies of all non-CBI comments are available at *http://www.regulations.gov* in the public docket for this action, EPA–HQ–OPPT–2005–0015. A discussion of the comments germane to the rulemaking, and the Agency's responses, follows.

1. *Comment summary*. Metal plating and finishing industries that currently use specific PFAS chemicals to meet regulatory standards for hexavalent chromium (Cr(VI)) emissions established by Federal and State regulations need to be excluded from the SNUR as a current use (similar to the exclusions for semiconductors and imaging products in previously promulgated SNURs). The releases and exposures to PFAS associated with the industry are comparably of much less concern than those related to nickel (Ni) and hexavalent chromium (Cr(VI)) which result when PFAS fume suppressants are not used. In addition, the economic and competitive liabilities will cripple this domestic industry if these chemicals are no longer permitted to be used. Commenters described their continuing efforts to find greener, safer substitutes, but explained that for many uses there are no viable alternatives. Commenters said that the metal finishing industry continues to support research and development efforts to identify commercially viable alternatives to hexavalent chromium plating chemistries. To date, alternative technologies show some promise for niche applications, but have not gained widespread commercial application due to: 1) The superior coating performance in decorative, functional, and corrosion protection applications for hexavalent chromium plating; 2) cost effective applications; 3) broad and flexible ranges of use; and 4) strong customer/market preferences for hexavalent chromium plating.

Response. EPA now recognizes that the metal plating and finishing industries currently use a specific PFAS chemical, tetraethylammonium perfluorooctanesulfonate (CAS No. 56773–42–3), to meet regulatory standards for hexavalent chromium (Cr(VI)) emissions. Thus, EPA has included this ongoing use of tetraethylammonium perfluorooctanesulfonate, as described in Unit II.A., as an exclusion in this SNUR, but encourages the continued exploration for possible substitutes.

2. *Comment summary*. Several specific uses of PFAS chemicals within the semiconductor, integrated circuit, and microelectronics industries were excluded from the previous two PFAS SNURs. The proposed SNUR includes an additional 183 chemicals that would affect those same uses in the same industry sectors, so the exclusions in the previous two SNURs should apply to the 183 chemicals listed in this SNUR. Also, these uses constitute ongoing uses, not significant new uses. The semiconductor industry has supported reduction initiatives and dialogue through trade associations in other regions around the world. One primary locus for reduction initiatives and dialogue has been the World Semiconductor Council.

Response. EPA recognizes that these are ongoing uses, and is therefore not designating the uses as significant new uses of the chemicals listed in Table 3. EPA is applying the exclusions described in Unit II.A. to the list of 183 PFAS chemicals in Table 3 of the regulatory text. EPA appreciates the efforts the semiconductor, integrated circuit, and microelectronics industries have made in their commitment to limit PFAS usage, to search for alternatives, and to limit exposures and releases.

3. *Comment summary*. Several specific uses of PFAS chemicals within the photographic film, paper, and imaging industries were excluded from the previous two PFAS SNURs. The proposed SNUR targets a broader list of 183 chemicals for these applications in the same industry sector. The exclusion in the previous SNURs should be applied to the 183 chemicals as well. Also, these uses constitute ongoing uses, not significant new uses. Comments also stated that since concerns were first raised in 2000, the photographic film, paper, and imaging industries have aggressively pursued a voluntary risk reduction strategy by investing heavily in research to find alternative substances that possess the performance features described earlier for PFAS.

Response. EPA recognizes that these are ongoing uses, and is therefore not designating the uses as significant new uses of the chemicals listed in Table 3. EPA is applying the current exclusion described in Unit II.A. to the list of 183 PFAS chemicals in Table 3 of the regulatory text. EPA appreciates the efforts the photographic film, paper, and imaging industries have made in their commitment to limit PFAS usage, to search for alternatives, and to limit exposures and releases.

4. *Comment summary*. Commenter requested an explanation of how the 183 chemicals in this SNUR were chosen, and pointed out that some of the alkyl ranges covered by the SNUR include chemicals with the PFAS chemical structure (Rf moiety) with a C4 chain length.

Response. EPA proposed that any PFAS chemical listed on the public TSCA Inventory that contained the Rf moiety with a chain length of C5 or larger as part of the chemical identity would be subject to the rulemaking process for this PFAS SNUR based on the similarity of these chemicals to those currently included in 40 CFR 721.9582. That decision addresses all PFAS chemicals on the public inventory that still remain after the previous two SNURs and the evidence that manufacturers have been moving to use the lower chain length PFAS chemicals. EPA also included all ranges that contained > C4 constituents, even when that lower end of the alkyl chain length

included C4 composition, in order to capture the higher homologues, including C8, as discussed in the proposed rule.

5. *Comment summary*. This comment summary is based on the sanitized version of a Confidential Business Information (CBI) comment submitted to docket ID number EPA–HQ–OPPT–2005–0015, DCN # 63070000019, as well as additional information later provided by the commenter. The commenter originally indicated that it uses 13 of the 183 chemicals in/as various specified applications. The commenter stated: 1) PFAS substances are not directly or indirectly introduced into consumer products; 2) the exclusions should be applied to the 183 chemicals in Table 3 of the proposed SNUR; and 3) it uses these chemicals for a specific use that is different from those uses that were excluded in previous SNURs, i.e., as a component of an etchant, including a surfactant or fume suppressant, used in the plating process to produce electronic devices. The commenter also provided information for the low risk applications of PFAS in these uses; e.g., low volume, low exposure to workers, and low PFAS content, and product stewardship accomplishments. The commenter requested an exclusion based on the activities being ongoing for use as a component of an etchant, including a surfactant or mist/fume suppressant, in plating processes to produce electronic devices. The commenter also reduced the number of chemicals involved in this ongoing etchant use from thirteen to seven chemicals.

Response. The Agency now recognizes the use of the seven chemicals identified by the commenter as a component of an etchant used in the plating process to produce electronic devices is an ongoing use. Consequently, the Agency has included this use of any of the seven chemicals as an exclusion in the final SNUR.

IX. Economic Analysis

A. SNUNs

EPA evaluated the potential costs of establishing SNUR reporting requirements for potential manufacturers and importers of the chemical substances included in Table 3 of the regulatory text. While most businesses are subject to a $2,500 user fee required by 40 CFR 700.45(b)(2)(iii), small businesses with annual sales of less than $40 million when combined with those of the parent company (if any) are subject to a reduced user fee of $100 (40 CFR 700.45(b)(1)). The cost of submitting a SNUN, estimated in EPA's Economic Analysis at $7,991, including the user fee (Ref. 6), will be incurred only if a company decides to pursue a significant new use as defined in this final SNUR. Furthermore, while the expense of a SNUN and the uncertainties of possible EPA regulation may discourage certain innovations, that impact would be limited because such factors are unlikely to discourage an innovation that has high potential value. EPA's complete economic analysis is available in the public docket for this rule (See docket ID number EPA–HQ–OPPT–2005–0015).

B. Export Notification

Under section 12(b) of TSCA and implementing regulations at 40 CFR part 707, subpart D, exporters must notify EPA if they export or intend to export a chemical substance or mixture for which, among other things, a rule has been proposed or promulgated under TSCA section 5. On November 14, 2006, EPA revised the export notification requirement from an annual to a one-time requirement per each destination country for each exporter of a chemical substance subject to TSCA sections 5(a)(2), 5(b), 5(e)(1), and 5(e)(2) (November 14, 2006, 71 FR 66234) (FRL–8101–3). Previous to this amendment, exporters were required to submit a notice the first time in the calendar year they exported a particular chemical to a particular country. Notifications must include the exporter's name and address, the chemical name, the date(s) of export or intended export, the importing country (or countries), and the section of TSCA under which EPA has taken action. The total costs of export notification will vary by chemical, depending on the number of required notifications (i.e., the number of countries to which the chemical is exported).

In the report, *Final Economic Analysis of the Amendments to TSCA Section 12(b) Export Notification Requirements* (Ref. 7), it estimated the one-time export notification cost for an exporter making 25 submissions in a year to be $1,076. For a single notification, the cost would be $43.04 ($1,076/25). This supersedes an earlier 1992 EPA estimate that the one-time cost of preparing and submitting an export notification was $62.60, and the subsequent update of that figure for inflation which was included in the economic analysis for the proposed SNUR.

The total costs of export notification will vary per chemical, depending on the number of required notifications (i.e., number of countries to which the chemical is exported). EPA is unable to make any estimate of the likely number of export notifications for chemicals covered in this SNUR.

X. References

1. California Air Resources Board, Barrera, Robert. E-mail dated May 1, 2006, 03:58 p.m. to Amy Breedlove, EPA/OPPT.

2. EPA/OPPT. Internet Sources on tetraethylammonium perfluoroalkylsulfonate: Selective results of internet searches done by Amy Breedlove, March 9, 2007 and March 19, 2007.

3. EPA. Capsule Report: Hard Chrome Fume Suppressants and Control Technologies. EPA/625/R–98/002, December 1998.

4. EPA. National Emission Standards for Hazardous Air Pollutants; Proposed Standards for Chromium Emissions From Hard and Decorative Chromium Electroplating and Chromium Anodizing Tanks. **Federal Register** (58 FR 65768, December 16, 1993), p. 65779.

5. Comments submitted to EPA from the Surface Finishing Industry Council on proposed SNUR for PFAS, August 8, 2006 (see document EPA–HQ–OPPT–2005–0015–0024.1 available on-line at *http://www.regulations.gov*).

6. EPA 2007. *Economic Analysis of the Final Significant New Use Rule for 183 Perfluoroalkyl Sulfonates*, August 20, 2007.

7. EPA 2005. *Final Economic Analysis of the Amendments to TSCA Section 12(b) Export Notification Requirements*, August 2006 (see document EPA–HQ–OPPT–2005–0058–0017 available on-line at *http://www.regulations.gov*).

XI. Statutory and Executive Order Reviews

A. Executive Order 12866

Under Executive Order 12866, entitled *Regulatory Planning and Review* (58 FR 51735, October 4, 1993), the Office of Management and Budget (OMB) has determined that this SNUR is not a ''significant regulatory action'' subject to review by OMB, because it does not meet the criteria in section 3(f) of the Executive Order.

B. Paperwork Reduction Act

According to the Paperwork Reduction Act (PRA), 44 U.S.C. 3501 *et seq.*, an Agency may not conduct or sponsor, and a person is not required to respond to a collection of information that requires OMB approval under the PRA, unless it has been approved by OMB and displays a currently valid OMB control number. The OMB control numbers for EPA's regulations codified

in chapter 40 of the CFR, after appearing in the preamble of the final rule, are listed in 40 CFR part 9, are displayed either by publication in the **Federal Register** or by other appropriate means, such as on the related collection instrument or form, if applicable. The display of OMB control numbers in certain EPA regulations is consolidated in 40 CFR part 9. For the ICR activity contained in this final rule, in addition to displaying the applicable OMB control number in this unit, the OMB control number assigned to this ICR activity is already included in the table in 40 CFR 9.1.

The information collection requirements related to this action have already been approved by OMB pursuant to the PRA under OMB control number 2070–0038 (EPA ICR No. 1188). This action does not impose any burden requiring additional OMB approval. The burden for submitting a SNUN is estimated to average 107 hours per submission, at an estimated cost of $5,491. This burden estimate includes the time needed to review instructions, search existing data sources, gather and maintain the data needed, and complete, review, and submit the required SNUN. This burden estimate does not include the $2,500 user fee for submission of a SNUN ($100 for businesses with less than $40 million in annual sales).

Send any comments about the accuracy of the burden estimate, and any suggested methods for minimizing respondent burden, including through the use of automated collection techniques, to the Director, Collection Strategies Division, Office of Environmental Information (2822T), Environmental Protection Agency, 1200 Pennsylvania Ave., NW., Washington, DC 20460–0001. Please remember to include the OMB control number in any correspondence, but do not submit any completed forms to this address.

C. Regulatory Flexibility Act

Pursuant to section 605(b) of the Regulatory Flexibility Act (RFA) (5 U.S.C. 601 *et seq.*), the Agency hereby certifies that promulgation of this SNUR would not have a significant adverse economic impact on a substantial number of small entities. The factual basis for the Agency's determination is presented in the small entity impact analysis prepared as part of the economic analysis for this rule (Ref. 6), which is summarized in Unit IX., and a copy of which is available in the docket for this rulemaking. The following is a brief summary of the factual basis for this certification.

Under the RFA, small entities include small businesses, small organizations, and small governmental jurisdictions. For purposes of assessing the impacts of today's rule on small entities, small entity is defined in accordance with the RFA as: (1) A small business as defined by the Small Business Administration's (SBA) regulations at 13 CFR 121.201; (2) a small governmental jurisdiction that is a government of a city, county, town, school district, or special district with a population of less than 50,000; and (3) a small organization that is any not-for-profit enterprise which is independently owned and operated and is not dominant in its field.

A SNUR applies to any person (including small or large entities) who intends to engage in any activity described in the rule as a ''significant new use.'' By definition of the word ''new,'' and based on all information currently available to EPA, it appears that no small or large entities presently engage in such activity. Because a SNUR requires only that any person who intends to engage in such activity in the future first notify EPA by submitting a SNUN, no economic impact would even occur until someone decides to engage in those activities. Although some small entities may decide to conduct such activities in the future, EPA cannot presently determine how many, if any, there may be.

However, EPA's experience to date is that, in response to the promulgation of over 1,000 SNURs, the Agency receives on average only 10 SNUNs per year. Of those SNUNs submitted, none appear to be from small entities in response to any SNUR. In addition, the estimated reporting cost for submission of a SNUN (see Unit IX.), is minimal regardless of the size of the entity. Therefore, EPA believes that the potential economic impact of complying with this SNUR is not expected to be significant nor adversely impact a substantial number of small entities. In a SNUR that published on June 2, 1997 (62 FR 29684) (FRL–5597–1), the Agency presented its general determination that proposed and final SNURs are not expected to have a significant economic impact on a substantial number of small entities, which was provided to the Chief Counsel for Advocacy of the Small Business Administration.

D. Unfunded Mandates Reform Act

Based on EPA's experience with proposing and finalizing SNURs, State, local, and Tribal governments have not been impacted by these rulemakings, and EPA does not have any reason to believe that any State, local, or Tribal government would be impacted by this rulemaking. As such, EPA has determined that this regulatory action would not impose any enforceable duty, contain any unfunded mandate, or otherwise have any affect on small governments subject to the requirements of sections 202, 203, 204, or 205 of the Unfunded Mandates Reform Act of 1995 (UMRA) (Public Law 104–4).

E. Executive Order 13132

This action would not have a substantial direct effect on States, on the relationship between the national government and the States, or on the distribution of power and responsibilities among the various levels of government, as specified in Executive Order 13132, entitled *Federalism* (64 FR 43255, August 10, 1999).

F. Executive Order 13175

This rule would not have Tribal implications because it is not expected to have substantial direct effects on Indian Tribes. This rule would not significantly or uniquely affect the communities of Indian Tribal governments, nor would it involve or impose any requirements that affect Indian Tribes. Accordingly, the requirements of Executive Order 13175, entitled *Consultation and Coordination with Indian Tribal Governments* (65 FR 67249, November 6, 2000), do not apply to this rule.

G. Executive Order 13045

This action is not subject to Executive Order 13045, entitled *Protection of Children from Environmental Health Risks and Safety Risks* (62 FR 19885, April 23, 1997), because this is not an economically significant regulatory action as defined by Executive Order 12866, and this action does not address environmental health or safety risks disproportionately affecting children.

H. Executive Order 13211

This rule is not subject to Executive Order 13211, entitled *Actions Concerning Regulations That Significantly Affect Energy Supply, Distribution, or Use* (66 FR 28355, May 22, 2001), because this action is not expected to affect energy supply, distribution, or use.

I. National Technology Transfer and Advancement Act

In addition, since this action does not involve any technical standards, section 12(d) of the National Technology Transfer and Advancement Act of 1995 (NTTAA), Public Law 104–113, section 12(d) (15 U.S.C. 272 note), does not apply to this action.

J. Executive Order 12898

This action does not entail special considerations of environmental justice related issues as delineated by Executive Order 12898, entitled *Federal Actions to Address Environmental Justice in Minority Populations and Low-Income Populations* (59 FR 7629, February 16, 1994).

XII. Congressional Review Act

The Congressional Review Act, 5 U.S.C. 801 *et seq.*, generally provides that before a rule may take effect, the Agency promulgating the rule must submit a rule report to each House of the Congress and the Comptroller General of the United States. EPA will submit a report containing this rule and other required information to the U.S. Senate, the U.S. House of Representatives, and the Comptroller General of the United States prior to publication of the rule in the **Federal Register**. This rule is not a ''major rule'' as defined by 5 U.S.C. 804(2).

List of Subjects in 40 CFR Part 721

Environmental protection, Chemicals, Hazardous substances, Reporting and recordkeeping requirements.

Dated: September 27, 2007.

Charles M. Auer,

Director, Office of Pollution Prevention and Toxics.

■ Therefore, 40 CFR part 721 is amended as follows:

PART 721—[AMENDED]

■ 1. The authority citation for part 721 continues to read as follows:

Authority: 15 U.S.C. 2604, 2607, and 2625(c).

■ 2. Section 721.9582 is amended as follows:

a. By revising the introductory text of paragraph (a)(1).

b. By adding Table 3 to paragraph (a)(1).

c. By revising paragraphs (a)(2) and (a)(3).

d. By adding paragraphs (a)(4) and (a)(5).

§ 721.9582 Certain perfluoroalkyl sulfonates.

(a) *Chemical substances and significant new uses subject to reporting.* (1) The chemical substances listed in Table 1, Table 2, and Table 3 of this section are subject to reporting under this section for the significant new uses described in paragraph (a)(2) of this section.

* * * * *

TABLE 3—PFAS CHEMICALS SUBJECT TO REPORTING ON OR AFTER NOVEMBER 8, 2007.

CAS No.	CAS Sixteenth Collective Index Name
335–24–0	Cyclohexanesulfonic acid, 1,2,2,3,3,4,5,5,6,6-decafluoro-4-(1,1,2,2,2-pentafluoroethyl)-, potassium salt (1:1)
335–71–7	1-Heptanesulfonyl fluoride, 1,1,2,2,3,3,4,4,5,5,6,6,7,7,7-pentadecafluoro-
335–77–3	1-Decanesulfonic acid, 1,1,2,2,3,3,4,4,5,5,6,6,7,7,8,8,9,9,10,10,10-heneicosafluoro-
335–97–7	1-Pentanesulfonamide, 1,1,2,2,3,3,4,4,5,5,5-undecafluoro-N-2-propen-1-yl-
355–03–3	Cyclohexanesulfonyl fluoride, 1,2,2,3,3,4,4,5,5,6,6-undecafluoro-
355–46–4	1-Hexanesulfonic acid, 1,1,2,2,3,3,4,4,5,5,6,6,6-tridecafluoro-
375–81–5	1-Pentanesulfonyl fluoride, 1,1,2,2,3,3,4,4,5,5,5-undecafluoro-
375–92–8	1-Heptanesulfonic acid, 1,1,2,2,3,3,4,4,5,5,6,6,7,7,7-pentadecafluoro-
423–86–9	1-Octanesulfonamide, 1,1,2,2,3,3,4,4,5,5,6,6,7,7,8,8,8-heptadecafluoro-N-2-propen-1-yl-
1869–77–8	Glycine, N-ethyl-N-[(1,1,2,2,3,3,4,4,5,5,6,6,7,7,8,8,8-heptadecafluorooctyl)sulfonyl]-, ethyl ester
1893–52–3	2-Propenoic acid, 2-[ethyl[(1,1,2,2,3,3,4,4,5,5,6,6,6-tridecafluorohexyl)sulfonyl]amino]ethyl ester
2263–09–4	1-Octanesulfonamide, N-butyl-1,1,2,2,3,3,4,4,5,5,6,6,7,7,8,8,8-heptadecafluoro-N-(2-hydroxyethyl)-
2706–91–4	1-Pentanesulfonic acid, 1,1,2,2,3,3,4,4,5,5,5-undecafluoro-
2965–52–8	1-Octanesulfonamide, N,N′-[phosphinicobis(oxy-2,1-ethanediyl)]bis[N-ethyl-1,1,2,2,3,3,4,4,5,5,6,6,7,7,8,8,8-heptadecafluoro-
2991–50–6	Glycine, N-ethyl-N-[(1,1,2,2,3,3,4,4,5,5,6,6,7,7,8,8,8-heptadecafluorooctyl)sulfonyl]-
2991–52–8	Glycine, N-ethyl-N-[(1,1,2,2,3,3,4,4,5,5,6,6,7,7,8,8,8-heptadecafluorooctyl)sulfonyl]-, ammonium salt (1:1)
3107–18–4	Cyclohexanesulfonic acid, 1,2,2,3,3,4,4,5,5,6,6-undecafluoro-, potassium salt (1:1)
3820–83–5	1-Octanesulfonamide, N-ethyl-1,1,2,2,3,3,4,4,5,5,6,6,7,7,8,8,8-heptadecafluoro-N-[2-(phosphonooxy)ethyl]-
3871–50–9	Glycine, N-ethyl-N-[(1,1,2,2,3,3,4,4,5,5,6,6,7,7,8,8,8-heptadecafluorooctyl)sulfonyl]-, sodium salt (1:1)
3871–99–6	1-Hexanesulfonic acid, 1,1,2,2,3,3,4,4,5,5,6,6,6-tridecafluoro-, potassium salt (1:1)
3872–25–1	1-Pentanesulfonic acid, 1,1,2,2,3,3,4,4,5,5,5-undecafluoro-, potassium salt (1:1)
13417–01–1	1-Octanesulfonamide, N-[3-(dimethylamino)propyl]-1,1,2,2,3,3,4,4,5,5,6,6,7,7,8,8,8-heptadecafluoro-

TABLE 3—PFAS CHEMICALS SUBJECT TO REPORTING ON OR AFTER NOVEMBER 8, 2007.—Continued

CAS No.	CAS Sixteenth Collective Index Name
21055–88–9	Carbamic acid, N,N′-(4-methyl-1,3-phenylene)bis-, C,C′-bis[2-[ethyl[(1,1,2,2,3,3,4,4,5,5,6,6,7,7,8,8,8-heptadecafluorooctyl)sulfonyl]amino]ethyl] ester
24924–36–5	1-Octanesulfonamide, N-ethyl-1,1,2,2,3,3,4,4,5,5,6,6,7,7,8,8,8-heptadecafluoro-N-2-propen-1-yl-
34455–03–3	1-Hexanesulfonamide, N-ethyl-1,1,2,2,3,3,4,4,5,5,6,6,6-tridecafluoro-N-(2-hydroxyethyl)-
37338–48–0	Poly[oxy(methyl-1,2-ethanediyl)], .alpha.-[2-[ethyl[(1,1,2,2,3,3,4,4,5,5,6,6,7,7,8,8,8-heptadecafluorooctyl)sulfonyl]amino]ethyl]-.omega.-hydroxy-
38850–52–1	1-Propanaminium, 3-[(carboxymethyl)[(1,1,2,2,3,3,4,4,5,5,6,6,6-tridecafluorohexyl)sulfonyl]amino]-N,N,N-trimethyl-, inner salt
38850–60–1	1-Propanesulfonic acid, 3-[[3-(dimethylamino)propyl][(1,1,2,2,3,3,4,4,5,5,6,6,6-tridecafluorohexyl)sulfonyl]amino]-
50598–28–2	1-Hexanesulfonamide, N-[3-(dimethylamino)propyl]-1,1,2,2,3,3,4,4,5,5,6,6,6-tridecafluoro-
50598–29–3	1-Octanesulfonamide, 1,1,2,2,3,3,4,4,5,5,6,6,7,7,8,8,8-heptadecafluoro-N-(phenylmethyl)-
51032–47–4	Benzenesulfonic acid, [[[(1,1,2,2,3,3,4,4,5,5,6,6,7,7,8,8,8-heptadecafluorooctyl)sulfonyl]amino]methyl]-, sodium salt (1:1)
52032–20–9	Poly(oxy-1,2-ethanediyl), .alpha.-[[[(1,1,2,2,3,3,4,4,5,5,6,6,7,7,8,8,8-heptadecafluorooctyl)sulfonyl]methylamino]carbonyl]-.omega.-butoxy-
52166–82–2	1-Propanaminium, N,N,N-trimethyl-3-[[(1,1,2,2,3,3,4,4,5,5,6,6,6-tridecafluorohexyl)sulfonyl]amino]-, chloride (1:1)
52550–45–5	Poly(oxy-1,2-ethanediyl), .alpha.-[2-[[(1,1,2,2,3,3,4,4,5,5,6,6,7,7,8,8,8-heptadecafluorooctyl)sulfonyl]propylamino]ethyl]-.omega.-hydroxy-
55910–10–6	Glycine, N-[(1,1,2,2,3,3,4,4,5,5,6,6,7,7,8,8,8-heptadecafluorooctyl)sulfonyl]-N-propyl-, potassium salt (1:1)
56372–23–7	Poly(oxy-1,2-ethanediyl), .alpha.-[2-[ethyl[(1,1,2,2,3,3,4,4,5,5,6,6,6-tridecafluorohexyl)sulfonyl]amino]ethyl]-.omega.-hydroxy-
56773–42–3	Ethanaminium, N,N,N-triethyl-, 1,1,2,2,3,3,4,4,5,5,6,6,7,7,8,8,8-heptadecafluoro-1-octanesulfonate (1:1)
58920–31–3	2-Propenoic acid, 4-[[(1,1,2,2,3,3,4,4,5,5,6,6,7,7,8,8,8-heptadecafluorooctyl)sulfonyl]methylamino]butyl ester
59071–10–2	2-Propenoic acid, 2-[ethyl[(1,1,2,2,3,3,4,4,5,5,6,6,7,7,7-pentadecafluoroheptyl)sulfonyl]amino]ethyl ester
60270–55–5	1-Heptanesulfonic acid, 1,1,2,2,3,3,4,4,5,5,6,6,7,7,7-pentadecafluoro-, potassium salt (1:1)
61577–14–8	2-Propenoic acid, 2-methyl-, 4-[[(1,1,2,2,3,3,4,4,5,5,6,6,7,7,8,8,8-heptadecafluorooctyl)sulfonyl]methylamino]butyl ester
66008–68–2	2-Propenoic acid, 2-[[(2,2,3,3,4,4,5,5,6,6,7,7,8,8,9,9,10,10,11,11,11-eicosafluoroundecyl)sulfonyl]methylamino]ethyl ester
66008–69–3	2-Propenoic acid, 2-[[(2,2,3,3,4,4,5,5,6,6,7,7,8,8,9,9,9-heptadecafluorononyl)sulfonyl]methylamino]ethyl ester
66008–70–6	2-Propenoic acid, 2-[methyl[(2,2,3,3,4,4,5,5,6,6,7,7,7-tridecafluoroheptyl)sulfonyl]amino]ethyl ester
67584–48–9	1-Hexanesulfonamide, 1,1,2,2,3,3,4,4,5,5,6,6,6-tridecafluoro-N-2-propen-1-yl-
67584–49–0	1-Heptanesulfonamide, 1,1,2,2,3,3,4,4,5,5,6,6,7,7,7-pentadecafluoro-N-2-propen-1-yl-
67584–50–3	1-Heptanesulfonamide, N-ethyl-1,1,2,2,3,3,4,4,5,5,6,6,7,7,7-pentadecafluoro-N-[3-(trichlorosilyl)propyl]-
67584–52–5	Glycine, N-ethyl-N-[(1,1,2,2,3,3,4,4,5,5,5-undecafluoropentyl)sulfonyl]-, potassium salt (1:1)
67584–53–6	Glycine, N-ethyl-N-[(1,1,2,2,3,3,4,4,5,5,6,6,6-tridecafluorohexyl)sulfonyl]-, potassium salt (1:1)
67584–54–7	1-Heptanesulfonamide, N-[3-(dimethylamino)propyl]-1,1,2,2,3,3,4,4,5,5,6,6,7,7,7-pentadecafluoro-
67584–56–9	2-Propenoic acid, 2-[methyl[(1,1,2,2,3,3,4,4,5,5,5-undecafluoropentyl)sulfonyl]amino]ethyl ester
67584–57–0	2-Propenoic acid, 2-[methyl[(1,1,2,2,3,3,4,4,5,5,6,6,6-tridecafluorohexyl)sulfonyl]amino]ethyl ester
67584–58–1	1-Propanaminium, N,N,N-trimethyl-3-[[(1,1,2,2,3,3,4,4,5,5,6,6,7,7,7-pentadecafluoroheptyl)sulfonyl]amino]-, iodide (1:1)
67584–60–5	2-Propenoic acid, 2-methyl-, 2-[methyl[(1,1,2,2,3,3,4,4,5,5,5-undecafluoropentyl)sulfonyl]amino]ethyl ester

TABLE 3—PFAS CHEMICALS SUBJECT TO REPORTING ON OR AFTER NOVEMBER 8, 2007.—Continued

CAS No.	CAS Sixteenth Collective Index Name
67584–61–6	2-Propenoic acid, 2-methyl-, 2-[methyl[(1,1,2,2,3,3,4,4,5,5,6,6,6-tridecafluorohexyl)sulfonyl]amino]ethyl ester
67584–62–7	Glycine, N-ethyl-N-[(1,1,2,2,3,3,4,4,5,5,6,6,7,7,7-pentadecafluoroheptyl)sulfonyl]-, potassium salt (1:1)
67906–38–1	2-Propenoic acid, 2-methyl-, 4-[methyl[(1,1,2,2,3,3,4,4,5,5,6,7,7,7-pentadecafluoroheptyl)sulfonyl]amino]butyl ester
67906–40–5	2-Propenoic acid, 2-methyl-, 4-[methyl[(1,1,2,2,3,3,4,4,5,5,5-undecafluoropentyl)sulfonyl]amino]butyl ester
67906–41–6	1-Heptanesulfonamide, N-ethyl-1,1,2,2,3,3,4,4,5,5,6,6,7,7,7-pentadecafluoro-N-2-propen-1-yl-
67906–70–1	2-Propenoic acid, 2-methyl-, 2-[ethyl[(1,1,2,2,3,3,4,4,5,5,6,6,6-tridecafluorohexyl)sulfonyl]amino]ethyl ester
67906–71–2	2-Propenoic acid, 2-methyl-, 2-[ethyl[(1,1,2,2,3,3,4,4,5,5,6,6,6-tridecafluorohexyl)sulfonyl]amino]ethyl ester, polymer with octadecyl 2-propenoate and 2-propenoic acid
67906–73–4	2-Propenoic acid, 2-methyl-, 2-[ethyl[(1,1,2,2,3,3,4,4,5,5,5-undecafluoropentyl)sulfonyl]amino]ethyl ester
67906–74–5	2-Propenoic acid, 2-methyl-, 2-[ethyl[(1,1,2,2,3,3,4,4,5,5,5-undecafluoropentyl)sulfonyl]amino]ethyl ester, polymer with octadecyl 2-propenoate and 2-propenoic acid
67923–61–9	1-Heptanesulfonamide, N-ethyl-1,1,2,2,3,3,4,4,5,5,6,6,7,7,7-pentadecafluoro-N-[2-(phosphonooxy)ethyl]-
67939–36–0	2-Propenoic acid, 2-methyl-, 2-[ethyl[(1,1,2,2,3,3,4,4,5,5,6,6,7,7,7-pentadecafluoroheptyl)sulfonyl]amino]ethyl ester
67939–37–1	2-Propenoic acid, 2-methyl-, 2-[ethyl[(1,1,2,2,3,3,4,4,5,5,6,6,7,7,7-pentadecafluoroheptyl)sulfonyl]amino]ethyl ester, polymer with octadecyl 2-propenoate and 2-propenoic acid
67939–42–8	1-Octanesulfonamide, N-ethyl-1,1,2,2,3,3,4,4,5,5,6,6,7,7,8,8,8-heptadecafluoro-N-[3-(trichlorosilyl)propyl]-
67939–61–1	2-Propenoic acid, 2-methyl-, 4-[methyl[(1,1,2,2,3,3,4,4,5,5,6,6,6-tridecafluorohexyl)sulfonyl]amino]butyl ester
67939–87–1	1-Pentanesulfonamide, N,N′-[phosphinicobis(oxy-2,1-ethanediyl)]bis[N-ethyl-1,1,2,2,3,3,4,4,5,5,5-undecafluoro-
67939–88–2	1-Octanesulfonamide, N-[3-(dimethylamino)propyl]-1,1,2,2,3,3,4,4,5,5,6,6,7,7,8,8,8-heptadecafluoro-, hydrochloride (1:1)
67939–90–6	1-Pentanesulfonamide, N-ethyl-1,1,2,2,3,3,4,4,5,5,5-undecafluoro-N-[2-(phosphonooxy)ethyl]-
67939–92–8	1-Hexanesulfonamide, N,N′-[phosphinicobis(oxy-2,1-ethanediyl)]bis[N-ethyl-1,1,2,2,3,3,4,4,5,5,6,6,6-tridecafluoro-
67939–93–9	1-Heptanesulfonamide, N,N′-[phosphinicobis(oxy-2,1-ethanediyl)]bis[N-ethyl-1,1,2,2,3,3,4,4,5,5,6,6,7,7,7-pentadecafluoro-
67939–94–0	1-Heptanesulfonamide, N,N′,N''-[phosphinylidynetris(oxy-2,1-ethanediyl)]tris[N-ethyl-1,1,2,2,3,3,4,4,5,5,6,6,7,7,7-pentadecafluoro-
67939–96–2	2-Propenoic acid, 2-methyl-, 2-[methyl[(1,1,2,2,3,3,4,4,5,5,6,6,7,7,7-pentadecafluoroheptyl)sulfonyl]amino]ethyl ester
67939–97–3	1-Heptanesulfonamide, N,N′-[phosphinicobis(oxy-2,1-ethanediyl)]bis[N-ethyl-1,1,2,2,3,3,4,4,5,5,6,6,7,7,7-pentadecafluoro-, ammonium salt (1:1)
67939–98–4	1-Heptanesulfonamide, N-ethyl-1,1,2,2,3,3,4,4,5,5,6,6,7,7,7-pentadecafluoro-N-[2-(phosphonooxy)ethyl]-, ammonium salt (1:2)
67940–02–7	1-Heptanesulfonamide, N-[3-(dimethylamino)propyl]-1,1,2,2,3,3,4,4,5,5,6,6,7,7,7-pentadecafluoro-, hydrochloride (1:1)
67969–65–7	1-Hexanesulfonamide, N-ethyl-1,1,2,2,3,3,4,4,5,5,6,6,6-tridecafluoro-N-[2-(phosphonooxy)ethyl]-
68081–83–4	Carbamic acid, N,N′-(4-methyl-1,3-phenylene)bis-, bis[2-[ethyl[(perfluoro-C4-8-alkyl)sulfonyl]amino]ethyl] ester
68084–62–8	2-Propenoic acid, 2-[methyl[(1,1,2,2,3,3,4,4,5,5,6,6,7,7,7-pentadecafluoroheptyl)sulfonyl]amino]ethyl ester
68156–00–3	Cyclohexanesulfonyl fluoride, nonafluorobis(trifluoromethyl)-
68156–06–9	Cyclohexanesulfonyl fluoride, decafluoro(1,1,2,2,2-pentafluoroethyl)-
68156–07–0	Cyclohexanesulfonic acid, decafluoro(trifluoromethyl)-, potassium salt (1:1)
68227–87–2	2-Propenoic acid, 2-methyl-, 2-[ethyl[(1,1,2,2,3,3,4,4,5,5,6,6,7,7,8,8,8-heptadecafluorooctyl)sulfonyl]amino]ethyl ester, telomer with 2-[ethyl[(1,1,2,2,3,3,4,4,4-nonafluorobutyl)sulfonyl]amino]ethyl 2-methyl-2-propenoate, 2-[ethyl[(1,1,2,2,3,3,4,4,5,5,6,6,7,7,7-pentadecafluoroheptyl)sulfonyl]amino]ethyl 2-methyl-2-propenoate, 2-[ethyl

TABLE 3—PFAS CHEMICALS SUBJECT TO REPORTING ON OR AFTER NOVEMBER 8, 2007.—Continued

CAS No.	CAS Sixteenth Collective Index Name
68227–94–1	2-Propenoic acid, 2-[[(1,1,2,2,3,3,4,4,5,5,6,6,7,7,8,8,8-heptadecafluorooctyl)sulfonyl]methylamino]ethyl ester, polymer with 2-[methyl[(1,1,2,2,3,3,4,4,4-nonafluorobutyl)sulfonyl]amino]ethyl 2-propenoate, .alpha.-(2-methyl-1-oxo-2-propen-1-yl)-.omega.-hydroxypoly(oxy-1,2-ethanediyl), .alpha.-(2-methyl-1-oxo-2-propen-1-yl)-.omega.
68227–96–3	2-Propenoic acid, butyl ester, telomer with 2-[[(1,1,2,2,3,3,4,4,5,5,6,6,7,7,8,8,8-heptadecafluorooctyl)sulfonyl]methylamino]ethyl 2-propenoate, 2-[methyl[(1,1,2,2,3,3,4,4,4-nonafluorobutyl)sulfonyl]amino]ethyl 2-propenoate, .alpha.-(2-methyl-1-oxo-2-propen-1-yl)-.omega.-hydroxypoly(oxy-1,4-butanediyl), .alpha.-(2-methyl
68227–97–4	2-Propenoic acid, 4-[methyl[(1,1,2,2,3,3,4,4,5,5,6,6,7,7,7-pentadecafluoroheptyl)sulfonyl]amino]butyl ester
68227–98–5	2-Propenoic acid, 4-[methyl[(1,1,2,2,3,3,4,4,5,5,6,6,6-tridecafluorohexyl)sulfonyl]amino]butyl ester
68227–99–6	2-Propenoic acid, 4-[methyl[(1,1,2,2,3,3,4,4,5,5,5-undecafluoropentyl)sulfonyl]amino]butyl ester
68228–00–2	2-Propenoic acid, ethyl ester, polymer with 4-[[(1,1,2,2,3,3,4,4,5,5,6,6,7,7,8,8,8-heptadecafluorooctyl)sulfonyl]methylamino]butyl 2-propenoate, 4-[methyl[(1,1,2,2,3,3,4,4,4-nonafluorobutyl)sulfonyl]amino]butyl 2-propenoate, .alpha.-(2-methyl-1-oxo-2-propen-1-yl)-.omega.-hydroxypoly(oxy-1,4-butanediyl), .alpha.-(2-methyl
68239–72–5	1-Pentanesulfonamide, 1,1,2,2,3,3,4,4,5,5,5-undecafluoro-N-(4-hydroxybutyl)-N-methyl-
68239–73–6	1-Octanesulfonamide, 1,1,2,2,3,3,4,4,5,5,6,6,7,7,8,8,8-heptadecafluoro-N-(4-hydroxybutyl)-N-methyl-
68239–74–7	1-Hexanesulfonamide, 1,1,2,2,3,3,4,4,5,5,6,6,6-tridecafluoro-N-(4-hydroxybutyl)-N-methyl-
68239–75–8	1-Heptanesulfonamide, N-ethyl-1,1,2,2,3,3,4,4,5,5,6,6,7,7,7-pentadecafluoro-N-[3-(trimethoxysilyl)propyl]-
68259–06–3	1-Nonanesulfonyl fluoride, 1,1,2,2,3,3,4,4,5,5,6,6,7,7,8,8,9,9,9-nonadecafluoro-
68259–07–4	1-Heptanesulfonic acid, 1,1,2,2,3,3,4,4,5,5,6,6,7,7,7-pentadecafluoro-, ammonium salt (1:1)
68259–08–5	1-Hexanesulfonic acid, 1,1,2,2,3,3,4,4,5,5,6,6,6-tridecafluoro-, ammonium salt (1:1)
68259–09–6	1-Pentanesulfonic acid, 1,1,2,2,3,3,4,4,5,5,5-undecafluoro-, ammonium salt (1:1)
68259–12–1	1-Nonanesulfonic acid, 1,1,2,2,3,3,4,4,5,5,6,6,7,7,8,8,9,9,9-nonadecafluoro-
68259–14–3	1-Heptanesulfonamide, 1,1,2,2,3,3,4,4,5,5,6,6,7,7,7-pentadecafluoro-N-methyl-
68259–15–4	1-Hexanesulfonamide, 1,1,2,2,3,3,4,4,5,5,6,6,6-tridecafluoro-N-methyl-
68259–38–1	Poly[oxy(methyl-1,2-ethanediyl)], .alpha.-[2-[ethyl[(1,1,2,2,3,3,4,4,5,5,6,6,6-tridecafluorohexyl)sulfonyl]amino]ethyl]-.omega.-hydroxy-
68259–39–2	Poly[oxy(methyl-1,2-ethanediyl)], .alpha.-[2-[ethyl[(1,1,2,2,3,3,4,4,5,5,6,6,7,7,7-pentadecafluoroheptyl)sulfonyl]amino]ethyl]-.omega.-hydroxy-
68298–06–6	2-Propenoic acid, 2-[ethyl[(1,1,2,2,3,3,4,4,5,5,5-undecafluoropentyl)sulfonyl]amino]ethyl ester
68298–08–8	1-Pentanesulfonamide, 1,1,2,2,3,3,4,4,5,5,5-undecafluoro-N-(phenylmethyl)-
68298–09–9	1-Hexanesulfonamide, 1,1,2,2,3,3,4,4,5,5,6,6,6-tridecafluoro-N-(phenylmethyl)-
68298–10–2	1-Heptanesulfonamide, 1,1,2,2,3,3,4,4,5,5,6,6,7,7,7-pentadecafluoro-N-(phenylmethyl)-
68298–11–3	1-Propanaminium, 3-[[(1,1,2,2,3,3,4,4,5,5,6,6,7,7,8,8,8-heptadecafluorooctyl)sulfonyl](3-sulfopropyl)amino]-N-(2-hydroxyethyl)-N,N-dimethyl-, inner salt
68298–13–5	1-Pentanesulfonamide, 1,1,2,2,3,3,4,4,5,5,5-undecafluoro-N-methyl-
68298–60–2	2-Propenoic acid, 2-[butyl[(1,1,2,2,3,3,4,4,5,5,6,6,7,7,7-pentadecafluoroheptyl)sulfonyl]amino]ethyl ester
68298–78–2	2-Propenoic acid, 2-methyl-, 2-[[[[5-[[[2-[ethyl[(1,1,2,2,3,3,4,4,5,5,6,6,7,7,8,8,8-heptadecafluorooctyl)sulfonyl]amino]ethoxy]carbonyl]amino]-2-methylphenyl]amino]carbonyl]oxy]propyl ester, telomer with butyl 2-propenoate, 2-[[[[5-[[[2-[ethyl[(1,1,2,2,3,3,4,4,4-nonafluorobutyl)sulfonyl]amino]ethoxy]carbon
68298–80–6	Poly(oxy-1,2-ethanediyl), .alpha.-[2-[ethyl[(1,1,2,2,3,3,4,4,5,5,5-undecafluoropentyl)sulfonyl]amino]ethyl]-.omega.-hydroxy-
68298–81–7	Poly(oxy-1,2-ethanediyl), .alpha.-[2-[ethyl[(1,1,2,2,3,3,4,4,5,5,6,6,7,7,7-pentadecafluoroheptyl)sulfonyl]amino]ethyl]-.omega.-hydroxy-

TABLE 3—PFAS CHEMICALS SUBJECT TO REPORTING ON OR AFTER NOVEMBER 8, 2007.—Continued

CAS No.	CAS Sixteenth Collective Index Name
68298–89–5	1-Heptanesulfonamide, 1,1,2,2,3,3,4,4,5,5,6,6,7,7,7-pentadecafluoro-N-(4-hydroxybutyl)-N-methyl-
68299–20–7	Benzenesulfonic acid, [[[(1,1,2,2,3,3,4,4,5,5,5-undecafluoropentyl)sulfonyl]amino]methyl]-, sodium salt (1:1)
68299–21–8	Benzenesulfonic acid, [[[(1,1,2,2,3,3,4,4,5,5,6,6,6-tridecafluorohexyl)sulfonyl]amino]methyl]-, sodium salt (1:1)
68299–29–6	Benzenesulfonic acid, ar-[[[(1,1,2,2,3,3,4,4,5,5,6,6,7,7,7-pentadecafluoroheptyl)sulfonyl]amino]methyl]-, sodium salt (1:1)
68299–39–8	2-Propenoic acid, 2-methyl-, 4-[[(1,1,2,2,3,3,4,4,5,5,6,6,7,7,8,8,8-heptadecafluorooctyl)sulfonyl]methylamino]butyl ester, telomer with butyl 2-propenoate, 2-[[(1,1,2,2,3,3,4,4,5,5,6,6,7,7,8,8,8-heptadecafluorooctyl)sulfonyl]methylamino]ethyl 2-propenoate, 4-[methyl[(1,1,2,2,3,3,4,4,4-nonafluorobutyl)sulfonyl]amino]butyl 2-methyl-2-propeno
68310–02–1	1-Heptanesulfonamide, N-butyl-1,1,2,2,3,3,4,4,5,5,6,6,7,7,7-pentadecafluoro-N-(2-hydroxyethyl)-
68310–17–8	Poly[oxy(methyl-1,2-ethanediyl)], .alpha.-[2-[ethyl[(1,1,2,2,3,3,4,4,5,5,5-undecafluoropentyl)sulfonyl]amino]ethyl]-.omega.-hydroxy-
68310–75–8	1-Propanaminium, 3-[[(1,1,2,2,3,3,4,4,5,5,6,6,7,7,8,8,8-heptadecafluorooctyl)sulfonyl]amino]-N,N,N-trimethyl-, iodide, ammonium salt (1:1:1)
68318–34–3	Cyclohexanesulfonyl fluoride, decafluoro(trifluoromethyl)-
68318–36–5	1-Propanaminium, 3-[(carboxymethyl)[(1,1,2,2,3,3,4,4,5,5,6,6,7,7,8,8,8-heptadecafluorooctyl)sulfonyl]amino]-N,N,N-trimethyl-, inner salt
68391–09–3	Sulfonic acids, C6-12-alkane, perfluoro, potassium salts
68541–01–5	Benzoic acid, 2,3,4,5-tetrachloro-6-[[[3-[[(1,1,2,2,3,3,4,4,5,5,6,6,7,7,7-pentadecafluoroheptyl)sulfonyl]oxy]phenyl]amino]carbonyl]-, potassium salt (1:1)
68541–02–6	Benzoic acid, 2,3,4,5-tetrachloro-6-[[[3-[[(1,1,2,2,3,3,4,4,5,5,5-undecafluoropentyl)sulfonyl]oxy]phenyl]amino]carbonyl]-, potassium salt (1:1)
68555–69–1	Glycine, N-ethyl-N-[(1,1,2,2,3,3,4,4,5,5,5-undecafluoropentyl)sulfonyl]-, sodium salt (1:1)
68555–70–4	Glycine, N-ethyl-N-[(1,1,2,2,3,3,4,4,5,5,6,6,6-tridecafluorohexyl)sulfonyl]-, sodium salt (1:1)
68555–71–5	Glycine, N-ethyl-N-[(1,1,2,2,3,3,4,4,5,5,6,6,7,7,7-pentadecafluoroheptyl)sulfonyl]-, sodium salt (1:1)
68555–72–6	1-Pentanesulfonamide, N-ethyl-1,1,2,2,3,3,4,4,5,5,5-undecafluoro-N-(2-hydroxyethyl)-
68555–73–7	1-Heptanesulfonamide, N-ethyl-1,1,2,2,3,3,4,4,5,5,6,6,7,7,7-pentadecafluoro-N-(2-hydroxyethyl)-
68555–74–8	1-Pentanesulfonamide, 1,1,2,2,3,3,4,4,5,5,5-undecafluoro-N-(2-hydroxyethyl)-N-methyl-
68555–75–9	1-Hexanesulfonamide, 1,1,2,2,3,3,4,4,5,5,6,6,6-tridecafluoro-N-(2-hydroxyethyl)-N-methyl-
68555–76–0	1-Heptanesulfonamide, 1,1,2,2,3,3,4,4,5,5,6,6,7,7,7-pentadecafluoro-N-(2-hydroxyethyl)-N-methyl-
68555–78–2	1-Pentanesulfonamide, N-[3-(dimethylamino)propyl]-1,1,2,2,3,3,4,4,5,5,5-undecafluoro-
68555–79–3	Glycine, N-ethyl-N-[(1,1,2,2,3,3,4,4,5,5,5-undecafluoropentyl)sulfonyl]-, ethyl ester
68555–81–7	1-Propanaminium, N,N,N-trimethyl-3-[[(1,1,2,2,3,3,4,4,5,5,6,6,7,7,7-pentadecafluoroheptyl)sulfonyl]amino]-, chloride (1:1)
68568–77–4	2-Propenoic acid, 2-methyl-, 2-[ethyl[(1,1,2,2,3,3,4,4,5,5,6,6,7,7,8,8,8-heptadecafluorooctyl)sulfonyl]amino]ethyl ester, polymer with 2-chloro-1,3-butadiene, 2-[ethyl[(1,1,2,2,3,3,4,4,4-nonafluorobutyl)sulfonyl]amino]ethyl 2-methyl-2-propenoate, 2-[ethyl[(1,1,2,2,3,3,4,4,5,5,6,6,7,7,7-pentadecafluoroheptyl)sulfonyl]amino]ethyl 2-methyl
68608–13–9	Sulfonamides, C4-8-alkane, perfluoro, N-ethyl-N-(hydroxyethyl), reaction products with TDI
68797–76–2	2-Propenoic acid, 2-methyl-, 2-ethylhexyl ester, polymer with 2-[[(1,1,2,2,3,3,4,4,5,5,6,6,7,7,8,8,8-heptadecafluorooctyl)sulfonyl]methylamino]ethyl 2-propenoate, 2-[methyl[(1,1,2,2,3,3,4,4,4-nonafluorobutyl)sulfonyl]amino]ethyl 2-propenoate, 2-[methyl[(1,1,2,2,3,3,4,4,5,5,6,6,7,7,7-pentadecafluoroheptyl)sulfonyl]amino]ethyl 2-propenoa
68815–72–5	Benzoic acid, 2,3,4,5-tetrachloro-6-[[[3-[[(1,1,2,2,3,3,4,4,5,5,6,6,6-tridecafluorohexyl)sulfonyl]oxy]phenyl]amino]carbonyl]-, potassium salt (1:1)

TABLE 3—PFAS CHEMICALS SUBJECT TO REPORTING ON OR AFTER NOVEMBER 8, 2007.—Continued

CAS No.	CAS Sixteenth Collective Index Name
68877–32–7	2-Propenoic acid, 2-methyl-, 2-[ethyl[(1,1,2,2,3,3,4,4,5,5,6,6,7,7,8,8,8-heptadecafluorooctyl)sulfonyl]amino]ethyl ester, polymer with 2-[ethyl[(1,1,2,2,3,3,4,4,4-nonafluorobutyl)sulfonyl]amino]ethyl 2-methyl-2-propenoate, 2-[ethyl[(1,1,2,2,3,3,4,4,5,5,6,6,7,7,7-pentadecafluoroheptyl)sulfonyl]amino]ethyl 2-methyl-2-propenoate, 2-[ethyl
68891–97–4	Chromium, diaquatetrachloro[.mu.-[N-ethyl-N-[(1,1,2,2,3,3,4,4,5,5,6,6,7,7,7-pentadecafluoroheptyl)sulfonyl]glycinato-.kappa.O:.kappa.O′]]-.mu.-hydroxybis(2-propanol)-
68891–98–5	Chromium, diaquatetrachloro[.mu.-[N-ethyl-N-[(1,1,2,2,3,3,4,4,5,5,6,6,6-tridecafluorohexyl)sulfonyl]glycinato-.kappa.O:.kappa.O′]]-.mu.-hydroxybis(2-propanol)di-
68891–99–6	Chromium, diaquatetrachloro[.mu.-[N-ethyl-N-[(1,1,2,2,3,3,4,4,5,5,5-undecafluoropentyl)sulfonyl]glycinato-.kappa.O:.kappa.O′]]-.mu.-hydroxybis(2-propanol)di-
68957–31–3	Glycine, N-ethyl-N-[(1,1,2,2,3,3,4,4,5,5,5-undecafluoropentyl)sulfonyl]-
68957–32–4	Glycine, N-ethyl-N-[(1,1,2,2,3,3,4,4,5,5,6,6,6-tridecafluorohexyl)sulfonyl]-
68957–53–9	Glycine, N-ethyl-N-[(1,1,2,2,3,3,4,4,5,5,6,6,6-tridecafluorohexyl)sulfonyl]-, ethyl ester
68957–54–0	Glycine, N-ethyl-N-[(1,1,2,2,3,3,4,4,5,5,6,6,7,7,7-pentadecafluoroheptyl)sulfonyl]-, ethyl ester
68957–55–1	1-Propanaminium, N,N,N-trimethyl-3-[[(1,1,2,2,3,3,4,4,5,5,5-undecafluoropentyl)sulfonyl]amino]-, chloride (1:1)
68957–57–3	1-Propanaminium, N,N,N-trimethyl-3-[[(1,1,2,2,3,3,4,4,5,5,5-undecafluoropentyl)sulfonyl]amino]-, iodide (1:1)
68957–58–4	1-Propanaminium, N,N,N-trimethyl-3-[[(1,1,2,2,3,3,4,4,5,5,6,6,6-tridecafluorohexyl)sulfonyl]amino]-, iodide (1:1)
68957–60–8	1-Pentanesulfonamide, N-[3-(dimethylamino)propyl]-1,1,2,2,3,3,4,4,5,5,5-undecafluoro-, hydrochloride (1:1)
68957–61–9	1-Hexanesulfonamide, N-[3-(dimethylamino)propyl]-1,1,2,2,3,3,4,4,5,5,6,6,6-tridecafluoro-, hydrochloride (1:1)
68957–62–0	1-Heptanesulfonamide, N-ethyl-1,1,2,2,3,3,4,4,5,5,6,6,7,7,7-pentadecafluoro-
68957–63–1	Glycine, N-ethyl-N-[(1,1,2,2,3,3,4,4,5,5,6,6,7,7,7-pentadecafluoroheptyl)sulfonyl]-
68958–60–1	Poly(oxy-1,2-ethanediyl), .alpha.-[2-[ethyl[(1,1,2,2,3,3,4,4,5,5,6,6,7,7,7-pentadecafluoroheptyl)sulfonyl]amino]ethyl]-.omega.-methoxy-
70225–15–9	1-Heptanesulfonic acid, 1,1,2,2,3,3,4,4,5,5,6,6,7,7,7-pentadecafluoro-, compd. with 2,2′-iminobis[ethanol] (1:1)
70225–16–0	1-Hexanesulfonic acid, 1,1,2,2,3,3,4,4,5,5,6,6,6-tridecafluoro-, compd. with 2,2'-iminobis[ethanol] (1:1)
70225–17–1	1-Pentanesulfonic acid, 1,1,2,2,3,3,4,4,5,5,5-undecafluoro-, compd. with 2,2'-iminobis[ethanol] (1:1)
70225–20–6	1-Propanaminium, N,N,N-trimethyl-3-[[(1,1,2,2,3,3,4,4,5,5,6,6,7,7,7-pentadecafluoroheptyl)sulfonyl]amino]-, sulfate (2:1)
70225–24–0	1-Propanaminium, N,N,N-trimethyl-3-[[(1,1,2,2,3,3,4,4,5,5,5-undecafluoropentyl)sulfonyl]amino]-, sulfate (2:1)
70225–26–2	1-Propanaminium, 3-[[(1,1,2,2,3,3,4,4,5,5,6,6,7,7,8,8,8,-heptadecafluorooctyl)sulfonyl]amino]-N,N,N-trimethyl-, sulfate (2:1)
70248–52–1	1-Propanaminium, N,N,N-trimethyl-3-[[(1,1,2,2,3,3,4,4,5,5,6,6,6-tridecafluorohexyl)sulfonyl]amino]-, sulfate (2:1)
70900–40–2	2-Propenoic acid, 2-methyl-, 2-[[[[5-[[[4-[[(1,1,2,2,3,3,4,4,5,5,6,6,7,7,8,8,8-heptadecafluorooctyl)sulfonyl]methylamino]butoxy]carbonyl]amino]-2-methylphenyl]amino]carbonyl]oxy]propyl ester, telomer with butyl 2-propenoate, 2-[[(1,1,2,2,3,3,4,4,5,5,6,6,7,7,8,8,8-heptadecafluorooctyl)sulfonyl]methylamino]ethyl 2-propenoate,
71463–74–6	1-Octanesulfonic acid, 1,1,2,2,3,3,4,4,5,5,6,6,7,7,8,8,8-heptadecafluoro-, compd. with piperidine (1:1)
71463–78–0	Phosphonic acid, P-[3-[ethyl[(1,1,2,2,3,3,4,4,5,5,6,6,7,7,8,8,8-heptadecafluorooctyl)sulfonyl]amino]propyl]-
71463–79–1	Phosphonic acid, P-[3-[ethyl[(1,1,2,2,3,3,4,4,5,5,6,6,7,7,7-pentadecafluoroheptyl)sulfonyl]amino]propyl]-
71463–80–4	Phosphonic acid, P-[3-[ethyl[(1,1,2,2,3,3,4,4,5,5,6,6,7,7,8,8,8-heptadecafluorooctyl)sulfonyl]amino]propyl]-, diethyl ester
71463–81–5	Phosphonic acid, P-[3-[ethyl[(1,1,2,2,3,3,4,4,5,5,6,6,7,7,7-pentadecafluoroheptyl)sulfonyl]amino]propyl]-, diethyl ester
72785–08–1	1-Propanesulfonic acid, 3-[[3-(dimethylamino)propyl][(1,1,2,2,3,3,4,4,5,5,6,6,7,7,8,8,8-heptadecafluorooctyl)sulfonyl]amino]-

TABLE 3—PFAS CHEMICALS SUBJECT TO REPORTING ON OR AFTER NOVEMBER 8, 2007.—Continued

CAS No.	CAS Sixteenth Collective Index Name
73018–93–6	2-Propenoic acid, 2-methyl-, 2-ethylhexyl ester, polymer with 2-[[(1,1,2,2,3,3,4,4,5,5,6,6,7,7,8,8,8-heptadecafluorooctyl)sulfonyl]methylamino]ethyl 2-propenoate
73019–19–9	Benzamide, 4-[[4-[[[2-[[(1,1,2,2,3,3,4,4,5,5,6,6,7,7,8,8,8-heptadecafluorooctyl)sulfonyl]propylamino]ethyl]amino]carbonyl]phenyl]methyl]-N-octadecyl-
73019–20–2	1,3-Benzenedicarboxamide, N^3-[2-[[(1,1,2,2,3,3,4,4,5,5,6,6,7,7,8,8,8-heptadecafluorooctyl)sulfonyl]methylamino]ethyl]-N^1-[2-[[(1,1,2,2,3,3,4,4,5,5,6,6,7,7,8,8,8-heptadecafluorooctyl)sulfonyl]propylamino]ethyl]-4-methyl-
73019–28–0	2-Propenoic acid, 2-[[(1,1,2,2,3,3,4,4,5,5,6,6,7,7,8,8,8-heptadecafluorooctyl)sulfonyl]propylamino]ethyl ester, polymer with .alpha.-(2-methyl-1-oxo-2-propen-1-yl)-.omega.-methoxypoly(oxy-1,2-ethanediyl)
73038–33–2	2-Propenoic acid, 2-[[(1,1,2,2,3,3,4,4,5,5,6,6,7,7,8,8,8-heptadecafluorooctyl)sulfonyl]propylamino]ethyl ester, polymer with 2-methyloxirane polymer with oxirane mono(2-methyl-2-propenoate)
73275–59–9	2-Propenoic acid, 2-[[(1,1,2,2,3,3,4,4,5,5,6,6,7,7,8,8,8-heptadecafluorooctyl)sulfonyl]propylamino]ethyl ester, polymer with .alpha.-(2-methyl-1-oxo-2-propen-1-yl)-.omega.-butoxypoly[oxy(methyl-1,2-ethanediyl)]
73772–33–5	1-Hexanesulfonamide, N-[3-(dimethylamino)propyl]-1,1,2,2,3,3,4,4,5,5,6,6,6-tridecafluoro-, acetate (1:1)
73772–34–6	1-Hexanesulfonamide, N-[3-(dimethylamino)propyl]-1,1,2,2,3,3,4,4,5,5,6,6,6-tridecafluoro-N-[2-[2-(2-hydroxyethoxy)ethoxy]ethyl]-
95590–48–0	2-Propenoic acid, 2-methyl-, 3-(trimethoxysilyl)propyl ester, polymer with ethenylbenzene, 2-[ethyl[(1,1,2,2,3,3,4,4,5,5,6,6,7,7,8,8,8-heptadecafluorooctyl)sulfonyl]amino]ethyl 2-propenoate and 2-hydroxyethyl 2-propenoate
148240–81–7	Fatty acids, C18-unsatd., trimers, 2-[methyl[(1,1,2,2,3,3,4,4,5,5,5-undecafluoropentyl)sulfonyl]amino]ethyl esters
179005–06–2	Sulfonamides, C4-8-alkane, perfluoro, N-[3-(dimethyloxidoamino)propyl], potassium salts

(2) The significant new uses are:

(i) Any manufacture or import for any use of any chemical substance listed in Table 1 of paragraph (a)(1) of this section.

(ii) Any manufacture or import for any use of any chemical substance listed in Table 2 of paragraph (a)(1) of this section, except as noted in paragraph (a)(3) of this section.

(iii) Any manufacture or import for any use of any chemical substance listed in Table 3 of paragraph (a)(1) of this section, except as noted in paragraphs (a)(3) through (a)(5) of this section.

(3) Manufacture or import of any chemical substance listed in Table 2 and Table 3 of paragraph (a)(1) of this section for the following specific uses shall not be considered as a significant new use subject to reporting under this section:

(i) Use as an anti-erosion additive in fire-resistant phosphate ester aviation hydraulic fluids.

(ii) Use as a component of a photoresist substance, including a photo acid generator or surfactant, or as a component of an anti-reflective coating, used in a photomicrolithography process to produce semiconductors or similar components of electronic or other miniaturized devices.

(iii) Use in coating for surface tension, static discharge, and adhesion control for analog and digital imaging films, papers, and printing plates, or as a surfactant in mixtures used to process imaging films.

(iv) Use as an intermediate only to produce other chemical substances to be used solely for the uses listed in paragraph (a)(3)(i), (ii), or (iii) of this section.

(4) Manufacture or import of tetraethylammonium perfluorooctanesulfonate (CAS No. 56773–42–3) for use as a fume/mist suppressant in metal finishing and plating baths shall not be considered as a significant new use subject to reporting under this section. Examples of such metal finishing and plating baths include: Hard chrome plating; decorative chromium plating; chromic acid anodizing; nickel, cadmium, or lead plating; metal plating on plastics; and alkaline zinc plating.

(5) Manufacture or import of: 1-Pentanesulfonic acid, 1,1,2,2,3,3,4,4,5,5,5-undecafluoro-, potassium salt (CAS No. 3872–25–1); Glycine, N-ethyl-N-[(tridecafluorohexyl)sulfonyl]-, potassium salt (CAS No. 67584–53–6); Glycine, N-ethyl-N-[(pentadeca fluoroheptyl)sulfonyl]-, potassium salt (CAS No. 67584–62–7); 1-Heptanesulfonic acid, 1,1,2,2,3,3,4,4,5,5,6,6,7,7,7-pentadecafluoro-, ammonium salt (CAS No. 68259–07–4); 1-Heptanesulfonamide, N-ethyl-1,1,2,2,3,3,4,4,5,5,6,6,7,7,7-pentadecafluoro- (CAS No. 68957–62–0); Poly(oxy-1,2-ethanediyl), .alpha.-[2-[ethyl[(pentadeca fluoroheptyl)sulfonyl]amino]ethyl]-.omega.-methoxy- (CAS No. 68958–60–1); or 1-Hexanesulfonic acid, 1,1,2,2,3,3,4,4,5,5,6,6,6-tridecafluoro-, compd. with 2,2′-iminobis[ethanol] (1:1) (CAS No. 70225–16–0) for use as a component of an etchant, including a surfactant or fume suppressant, used in the plating process to produce electronic devices shall not be considered a significant new use subject to reporting under this section.

* * * * *

[FR Doc. E7–19828 Filed 10–5–07; 8:45 am]

BILLING CODE 6560–50–S

ENVIRONMENTAL PROTECTION AGENCY

40 CFR Parts 750 and 761

[EPA–HQ–OPPT–2007–0425; FRL–8150–6]

Transfer of Polychlorinated Biphenyl Cleanup and Disposal Program from the Office of Prevention, Pesticides and Toxic Substances to the Office of Solid Waste and Emergency Response

AGENCY: Environmental Protection Agency (EPA).

ACTION: Final rule.

SUMMARY: EPA is transferring the management of the polychlorinated biphenyl (PCB) cleanup program and most of the PCB disposal program from the Office of Prevention, Pesticides and Toxic Substances (OPPTS) to the Office of Solid Waste and Emergency Response (OSWER). This final rule is a rule of agency organization, procedure, or practice. It makes minor amendments to 40 CFR parts 750 and 761, to update certain titles, organization references, and mailing and website addresses so that required procedures for providing information and seeking approvals will be consistent with EPA's new internal organization for managing the PCB program. OPPTS currently manages the PCB program under the Toxic Substances Control Act (TSCA) and its regulations. OSWER is the office within EPA that manages most cleanup and disposal activities under the Solid Waste Disposal Act, as amended by the Resource Conservation and Recovery Act of 1976 (RCRA) and the Comprehensive Environmental Response, Compensation, and Liability Act (CERCLA). After the administrative transfer is completed, OSWER will oversee most issues pertaining to PCB cleanup and disposal under TSCA, RCRA, and CERCLA, as appropriate; OPPTS will continue to oversee other issues pertaining to PCBs (e.g., issues pertaining to PCB use) under TSCA. The transfer of the management of the PCB cleanup and disposal program from OPPTS to OSWER will consolidate administration of cleanup and disposal activities within one office. The transfer will not make any substantive changes to the regulatory requirements or standards for PCB cleanup and disposal under TSCA.

DATES: This final rule is effective October 9, 2007.

ADDRESSES: EPA has established a docket for this action under docket identification (ID) number EPA–HQ–OPPT–2007–0425. All documents in the docket are listed in the docket index available in regulations.gov. To access the electronic docket, go to *http://www.regulations.gov*, select ''Advanced Search,'' then ''Docket Search.'' Insert the docket ID number where indicated and select the ''Submit'' button. Follow the instructions on the regulations.gov website to view the docket index or access available documents. Although listed in the index, some information is not publicly available, e.g., Confidential Business Information (CBI) or other information whose disclosure is restricted by statute. Certain other material, such as copyrighted material, will be publicly available only in hard copy. Publicly available docket materials are available electronically at *http://www.regulations.gov*, or, if only available in hard copy, at the OPPT Docket. The OPPT Docket is located in the EPA Docket Center (EPA/DC) at Rm. 3334, EPA West Bldg., 1301 Constitution Ave., NW., Washington, DC. The EPA/DC Public Reading Room hours of operation are 8:30 a.m. to 4:30 p.m., Monday through Friday, excluding Federal holidays. The telephone number of the EPA/DC Public Reading Room is (202) 566–1744, and the telephone number for the OPPT Docket is (202) 566–0280. Docket visitors are required to show photographic identification, pass through a metal detector, and sign the EPA visitor log. All visitor bags are processed through an X-ray machine and subject to search. Visitors will be provided an EPA/DC badge that must be visible at all times in the building and returned upon departure.

FOR FURTHER INFORMATION CONTACT: *For general information contact*: Colby Lintner, Regulatory Coordinator, Environmental Assistance Division (7408M), Office of Pollution Prevention and Toxics, Environmental Protection Agency, 1200 Pennsylvania Ave., NW., Washington, DC 20460–0001; telephone number: (202) 554–1404; e-mail address: *TSCA-Hotline@epa.gov*.

For technical information contact: Sara McGurk, National Program Chemicals Division (7404T), Office of Pollution Prevention and Toxics, Environmental Protection Agency, 1200 Pennsylvania Ave., NW., Washington, DC 20460–0001; telephone number: (202) 566–0480; e-mail address: *mcgurk.sara@epa.gov*.

Vernon Myers, Permits and State Programs Division, Office of Solid Waste (5303P), Environmental Protection Agency, 1200 Pennsylvania Ave., NW., Washington, DC 20460–0001; telephone number: (703) 308–8660; e-mail address: *myers.vernon@epa.gov*.

SUPPLEMENTARY INFORMATION:

I. General Information

You may be potentially affected by this action if you manufacture, process, distribute in commerce, use, cleanup, transport, store, or dispose of PCBs or materials containing PCBs. Potentially affected entities may include, but are not limited to:

- Oil and gas extraction (NAICS code 21111), e.g., operating or closed facilities that use, contain, or dispose of PCBs or PCB wastes.
- Electric power generation, transmission, and distribution (NAICS code 2211), e.g., operating or closed facilities that use, contain, or dispose of PCBs or PCB wastes.
- Construction (NAICS code 23), e.g., operating or closed facilities that use, contain, or dispose of PCBs or PCB wastes.
- Food manufacturing (NAICS code 311), e.g., operating or closed facilities that use, contain, or dispose of PCBs or PCB wastes.
- Paper manufacturing (NAICS code 322), e.g., operating or closed facilities that use, contain, or dispose of PCBs or PCB wastes.
- Petroleum and coal products manufacturing (NAICS code 324), e.g., operating or closed facilities that use, contain, or dispose of PCBs or PCB wastes.
- Chemical manufacturing (NAICS code 325), e.g., operating or closed facilities that use, contain, or dispose of PCBs or PCB wastes.
- Plastics and rubber manufacturing (NAICS code 326), e.g., operating or closed facilities that use, contain, or dispose of PCBs or PCB wastes.
- Primary metal manufacturing (NAICS code 331), e.g., operating or closed facilities that use, contain, or dispose of PCBs or PCB wastes.
- Machinery manufacturing (NAICS code 333), e.g., operating or closed facilities that use, contain, or dispose of PCBs or PCB wastes.
- Computer and electronics product manufacturing (NAICS code 334), e.g., operating or closed facilities that use, contain, or dispose of PCBs or PCB wastes.
- Electrical equipment, appliance, and component manufacturing (NAICS code 335), e.g., operating or closed facilities that use, contain, or dispose of PCBs or PCB wastes.
- Transportation equipment manufacturing (NAICS code 336), e.g., operating or closed facilities that use, contain, or dispose of PCBs or PCB wastes.
- Rail transportation (NAICS code 48211), e.g., operating or closed facilities that use, contain, or dispose of PCBs or PCB wastes.
- Lessors of real estate (NAICS code 5311), e.g., operating or closed facilities that use, contain, or dispose of PCBs or PCB wastes.
- Waste collection (NAICS code 5621), e.g., operating or closed facilities that use, contain, or dispose of PCBs or PCB wastes.
- Waste treatment and disposal (NAICS code 5622), e.g., operating or closed facilities that use, contain, or dispose of PCBs or PCB wastes.
- Remediation and other waste management services (NAICS code 5629), e.g., operating or closed facilities

that use, contain, or dispose of PCBs or PCB wastes.

• Repair and maintenance (NAICS code 811), e.g., operating or closed facilities that use, contain, or dispose of PCBs or PCB wastes.

• Public administration (NAICS code 92), e.g., operating or closed facilities that use, contain, or dispose of PCBs or PCB wastes.

This listing is not intended to be exhaustive, but rather provides a guide for readers regarding entities likely to be affected by this action. Other types of entities not listed in this unit could also be affected. The North American Industrial Classification System (NAICS) codes have been provided to assist you and others in determining whether this action might apply to certain entities. To determine whether you or your business may be affected by this action, you should carefully examine the applicability provisions in 40 CFR parts 750 and 761. If you have any questions regarding the applicability of this action to a particular entity, consult the technical persons listed under **FOR FURTHER INFORMATION CONTACT**.

II. Background

A. What Action is the Agency Taking?

This final rule is an agency organization, procedure, or practice rule which amends 40 CFR parts 750 and 761 to replace certain OPPTS contact information with OSWER contact information. This final rule will not make substantive changes to the PCB regulations under TSCA. Rather it will amend the regulations to provide the appropriate contact information so that required procedures for providing information and seeking approvals will be consistent with EPA's new internal organization for managing the PCB program. In the regulatory text, ''EPA'' is identified as the entity with decisionmaking authority for certain approvals or determinations. Specific EPA officials will be authorized to exercise these authorities on behalf of the Agency pursuant to internal delegations. Instructions for the submission of materials required for approvals and determinations are specifically set forth in the regulatory text.

This rule is necessary because EPA is transferring the management of the PCB cleanup program and most of the PCB disposal program from OPPTS to OSWER. Given OSWER's role in ensuring environmentally sound waste storage, treatment, cleanup, and disposal, the administrative transfer will consolidate the administration and implementation of cleanup and disposal programs within that office, which will maximize the use of the Agency's limited resources. EPA believes that the transfer of the PCB cleanup and disposal program from OPPTS to OSWER is a natural fit. Further, the transfer is consistent with EPA's goals pursuant to the One Cleanup Program, which operates to improve the coordination, speed, and effectiveness of cleanups at the nation's contaminated sites, as well as the Agency's overall goal to protect human health and the environment.

After the administrative transfer is completed, OSWER will oversee issues pertaining to PCB cleanup and disposal, storage for disposal, processing related to disposal, distribution in commerce related to disposal or processing for disposal, and decontamination under TSCA, RCRA, and CERCLA, as appropriate. OPPTS will continue to oversee issues pertaining to PCB use, storage for use or reuse, manufacture, processing related to manufacture and use, and distribution in commerce related to use or processing for use under TSCA. OSWER will implement PCB cleanup and disposal under TSCA and its regulations as they currently exist. Thus, PCB cleanup and disposal under TSCA will continue to be a federally implemented program. Where cleanup and disposal approvals and renewals are concerned, current approvals will continue as currently written and renewals will be processed as scheduled. OSWER will receive any new applications for cleanup and disposal approvals, renewals, or approval modifications beginning October 9, 2007.

OSWER and OPPTS have formed a transition team to facilitate the administrative transfer. OSWER will identify staff to take over specific PCB issues and sections of the regulations. Once identified, OSWER will post contact information on the PCB website, available at *http://www.epa.gov/pcb*.

In addition to facilitating the administrative transfer of the PCB cleanup and disposal program, this final rule makes minor amendments to 40 CFR part 761, to correct certain typographical errors and outdated information in OPPTS mailing addresses.

B. What is the Agency's Authority for Taking this Action?

This final rule is issued by OPPTS under its general rulemaking authority and TSCA, 15 U.S.C. 2601–2692. This final rule is not subject to the notice and comment requirements of the Administrative Procedure Act (APA) because this action falls under ''rules of agency organization, procedure, or practice,'' and the exception provided by 5 U.S.C. 553(b)(3)(A).

III. Statutory and Executive Order Reviews

A. Executive Order 12866: Regulatory Planning and Review

This final rule implements an administrative transfer of a portion of the PCB program from OPPTS to OSWER and amends 40 CFR parts 750 and 761. For those portions of the program remaining in OPPTS, this final rule also corrects certain OPPTS mailing addresses. This final rule does not otherwise impose or amend any requirements. As such, the Office of Management and Budget (OMB) has determined that this final rule is not a ''significant regulatory action'' subject to review by OMB under Executive Order 12866, entitled *Regulatory Planning and Review* (58 FR 51735, October 4, 1993).

B. Paperwork Reduction Act

This final rule does not contain any information collection requirements that require review and approval by OMB pursuant to the Paperwork Reduction Act of 1995 (PRA) (44 U.S.C. 3501 *et seq.*).

C. Regulatory Flexibility Act

Since this action falls under ''rules of agency organization, procedure, or practice,'' and the exception provided by 5 U.S.C. 553(b)(3)(A), it is not subject to notice and comment requirements under the APA or any other statute (see Unit II.B.) and is not subject to provisions of the Regulatory Flexibility Act (RFA) (5 U.S.C. 601 *et seq.*).

D. Unfunded Mandates Reform Act

This final rule is not subject to sections 202 and 205 of the Unfunded Mandates Reform Act of 1995 (UMRA) (Public Law 104–4) and does not significantly or uniquely affect small governments or impose a significant intergovernmental mandate, as described in sections 203 and 204 of UMRA.

E. Executive Order 13132: Federalism

This final rule will not have substantial direct effects on the States, on the relationship between the national government and the States, or on the distribution of power and responsibilities among the various levels of government, as specified in Executive Order 13132, entitled *Federalism* (64 FR 43255, August 10, 1999).

F. Executive Order 13175: Consultation and Coordination with Indian Tribal Governments

This action does not significantly or uniquely affect the communities of tribal governments as specified by Executive Order 13175, entitled *Consultation and Coordination with Indian Tribal Governments* (65 FR 67249, November 6, 2000).

G. Executive Order 13045: Protection of Children from Environmental Health Risks and Safety Risks

Because this action is not economically significant as defined by section 3(f) of Executive Order 12866, this action is not subject to Executive Order 13045, entitled *Protection of Children from Environmental Health Risks and Safety Risks* (62 FR 19885, April 23, 1997).

H. Executive Order 13211: Actions Concerning Regulations That Significantly Affect Energy Supply, Distribution, or Use

This final rule is not subject to Executive Order 13211, entitled *Actions Concerning Regulations That Significantly Affect Energy Supply, Distribution, or Use* (66 FR 28355, May 22, 2001), because this action is not expected to affect energy supply, distribution, or use.

I. National Technology Transfer and Advancement Act

This action does not involve any technical standards that require the Agency's consideration of voluntary consensus standards pursuant to section 12(d) of the National Technology Transfer and Advancement Act of 1995 (NTTAA), Public Law 104–113, section 12(d) (15 U.S.C. 272 note).

J. Executive Order 12898: Federal Actions to Address Environmental Justice in Minority Populations and Low-Income Populations

This action will not result in environmental justice related issues and does not, therefore, require special consideration under Executive Order 12898, entitled *Federal Actions to Address Environmental Justice in Minority Populations and Low-Income Populations* (59 FR 7629, February 16, 1994).

IV. Congressional Review Act

The Congressional Review Act, 5 U.S.C. 801–808, generally provides that before a rule may take effect, the agency promulgating the rule must submit a rule report to each House of the Congress and the Comptroller General of the United States. EPA will submit a report containing this rule and other required information to the U.S. Senate, the U.S. House of Representatives, and the Comptroller General of the United States prior to publication of the rule in the **Federal Register**. This rule is not a ''major rule'' as defined by 5 U.S.C. 804(2).

List of Subjects

40 CFR Part 750

Environmental protection, Administrative practice and procedure, Chemicals, Hazardous substances.

40 CFR Part 761

Environmental protection, Hazardous substances, Labeling, Polychlorinated biphenyls (PCBs), Reporting and recordkeeping requirements.

Dated: September 28, 2007.

James B. Gulliford,

Assistant Administrator, Office of Prevention, Pesticides and Toxic Substances.

■ Therefore, 40 CFR chapter I is amended as follows:

PART 750—[AMENDED]

■ 1. The authority citation for part 750 continues to read as follows:

Authority: 15 U.S.C. 2605.

■ 2. In § 750.11, revise paragraph (b) to read as follows:

§ 750.11 Filing of petitions for exemption.

* * * * *

(b) *Where to file.* All petitions pertaining to:

(1) PCB use, which includes storage for use or reuse, manufacture, processing related to manufacture and use, and distribution in commerce related to use or processing for use, must be submitted to: OPPT Document Control Officer (7407T), Environmental Protection Agency, 1200 Pennsylvania Ave., NW., Washington, DC 20460–0001.

(2) PCB disposal, which includes cleanup, storage for disposal, processing related to disposal, distribution in commerce related to disposal or processing for disposal, and decontamination, must be submitted to: Document Control Officer, Office of Solid Waste (5305P), Environmental Protection Agency, 1200 Pennsylvania Ave., NW., Washington, DC 20460–0001.

* * * * *

■ 3. In § 750.21, revise paragraph (b) to read as follows:

§ 750.21 Final rule.

* * * * *

(b) EPA will grant or deny petitions under section 6(e)(3)(B) of TSCA submitted pursuant to § 750.11. EPA will act on such petitions subsequent to opportunity for an informal hearing pursuant to this rule.

* * * * *

■ 4. In § 750.31, revise paragraph (b) to read as follows:

§ 750.31 Filing of petitions for exemption.

* * * * *

(b) *Where to file.* All petitions pertaining to:

(1) PCB use, which includes storage for use or reuse, manufacture, processing related to manufacture and use, and distribution in commerce related to use or processing for use, must be submitted to: OPPT Document Control Officer (7407T), Environmental Protection Agency, 1200 Pennsylvania Ave., NW., Washington, DC 20460–0001.

(2) PCB disposal, which includes cleanup, storage for disposal, processing related to disposal, distribution in commerce related to disposal or processing for disposal, and decontamination, must be submitted to: Document Control Officer, Office of Solid Waste (5305P), Environmental Protection Agency, 1200 Pennsylvania Ave., NW., Washington, DC 20460–0001.

* * * * *

■ 5. In § 750.34, revise paragraph (a)(5) to read as follows:

§ 750.34 Record.

(a) * * *

(5) Any other information that EPA considers to be relevant to such rule and that EPA identified, on or before the date of the promulgation of the rule, in a notice published in the **Federal Register**.

* * * * *

■ 6. In § 750.41, revise paragraph (b) to read as follows:

§ 750.41 Final rule.

* * * * *

(b) EPA will grant or deny petitions under section 6(e)(3)(B) of TSCA submitted pursuant to § 750.31. EPA will act on such petitions subsequent to opportunity for an informal hearing pursuant to this rule.

* * * * *

PART 761—[AMENDED]

■ 7. The authority citation for part 761 continues to read as follows:

Authority: 15 U.S.C. 2605, 2607, 2611, 2614, and 2616.

§ 761.19 [Amended]

■ 8. By removing the phrase ''TSCA Nonconfidential Information Center (7407), Rm. B607, Northeast Mall, Office of Pollution Prevention and Toxics, Environmental Protection Agency, 401 M St., SW., Washington, DC 20460'' and adding in its place ''EPA Docket Center (EPA/DC), Rm. 3334, EPA West Bldg., 1301 Constitution Ave., NW., Washington, DC 20460–0001'' in § 761.19(b), introductory text.

§ 761.60 [Amended]

■ 9. By removing the phrase ''the Assistant Administrator for Prevention, Pesticides and Toxic Substances'' and adding in its place ''EPA'' in § 761.60(b)(2)(v), first sentence of the introductory text.

■ 10. By removing the phrase ''the Assistant Administrator'' and adding in its place ''EPA'' in § 761.60(b)(2)(v), second sentence of the introductory text.

■ 11. By removing the phrase ''The Assistant Administrator may permit disposal of PCB capacitors in EPA approved chemical waste landfills after March 1, 1981, if in his'' and adding in its place ''EPA may permit disposal of PCB capacitors in EPA-approved chemical waste landfills after March 1, 1981, if in its'' in § 761.60(b)(2)(v), last sentence of the introductory text.

■ 12. By removing the phrase ''must submit a written request to either the EPA Regional Administrator or the Director, National Program Chemicals Division'' and adding in its place ''must submit a written request to either the Regional Administrator or the Director, Office of Solid Waste'' in § 761.60(e), first sentence.

■ 13. By removing the phrase ''Requests for approval of alternate methods that will be operated in more than one Region must be submitted to the Director, National Program Chemicals Division'' and adding in its place ''Requests for approval of alternate methods that will be operated in more than one Region must submitted to the Director, Office of Solid Waste,'' in § 761.60(e), second sentence.

■ 14. By removing the phrase ''On the basis of such information and any available information, the EPA Regional Administrator or the Director, National Program Chemicals Division may, in his or her discretion, approve the use of the alternate method if he or she'' and adding in its place ''On the basis of such information and any available information, EPA may, in its discretion, approve the use of the alternate method if it'' in § 761.60(e), fifth sentence.

■ 15. By removing the phrase ''Any approval must be stated in writing and may include such conditions and provisions as the EPA Regional Administrator or Director, National Program Chemicals Division'' and adding in its place ''Any approval must be stated in writing and may include such conditions and provisions as EPA'' in § 761.60(e), sixth sentence.

■ 16. By removing the phrase ''(the Director, National Programs Chemical Division and the Regional Administrators)'' in § 761.60(i)(1).

■ 17. By removing the phrase ''Notwithstanding, the Director, National Programs Chemical Division may, at his/her'' and adding in its place ''Notwithstanding, EPA may, at its'' in § 761.60(i)(1).

■ 18. By removing the phrase ''Office of Prevention, Pesticides and Toxic Substances'' and adding in its place ''Office of Solid Waste and Emergency Response'' in § 761.60(i)(1).

■ 19. By removing the phrase ''the Director, National Program Chemicals Division'' and adding in its place ''EPA'' in § 761.60(i)(2).

§ 761.61 [Amended]

■ 20. By removing the phrase ''must apply in writing to the EPA Regional Administrator in the Region where the sampling, cleanup, disposal or storage site is located, for sampling, cleanup, disposal or storage occurring in a single EPA Region; or to the Director of the National Program Chemicals Division'' and adding in its place ''must apply in writing to the Regional Administrator in the Region where the sampling, cleanup, disposal, or storage site is located, for sampling, cleanup, disposal, or storage occurring in a single EPA Region; or to the Director, Office of Solid Waste'' in § 761.61(c)(1).

§ 761.62 [Amended]

■ 21. By removing the phrase ''must apply in writing to: the EPA Regional Administrator in the Region where the sampling, disposal, or storage site is located, for sampling, disposal, or storage occurring in a single EPA Region; or to the Director of the National Program Chemicals Division'' and adding in its place ''must apply in writing to the Regional Administrator in the Region where the sampling, disposal, or storage site is located, for sampling, disposal, or storage occurring in a single EPA Region; or to the Director, Office of Solid Waste'' in § 761.62(c)(1).

§ 761.65 [Amended]

■ 22. By removing the phrase ''Director, National Program Chemicals Division,'' and adding in its place ''appropriate official at EPA Headquarters'' in § 761.65(a)(3), first sentence.

■ 23. By removing the phrase ''Director, National Program Chemicals Division'' and adding in its place ''appropriate official at EPA Headquarters'' in §§ 761.65(a)(3), last sentence; 761.65(a)(4); and 761.65(j), introductory text.

■ 24. By removing the phrase ''the Regional Administrator (or the Director of the Chemical Management Division (Director, National Programs Chemical Division) in cases involving commercial storage ancillary to a facility approved for disposal by the Director, National Programs Chemical Division)'' and adding in its place ''EPA'' in § 761.65(d)(1).

■ 25. By removing the phrase ''(or the Director, National Programs Chemical Division, if the commercial storage area is ancillary to a facility approved for disposal by the Director, National Programs Chemical Division)'' and adding in its place ''(or the appropriate official at EPA Headquarters, if the commercial storage area is ancillary to a disposal facility for which an official at EPA Headquarters has approval authority)'' in § 761.65(d)(2), introductory text.

■ 26. By removing the phrase ''by the Regional Administrator or the Director, National Programs Chemical Division,'' in § 761.65(d)(2), introductory text.

■ 27. By removing the phrase ''(or the Director, National Programs Chemical Division, if the commercial storage is ancillary to a disposal facility permitted by the Director, National Programs Chemical Division)'' and adding in its place ''(or the appropriate official at EPA Headquarters, if the commercial storage area is ancillary to a disposal facility permitted by an official at EPA Headquarters)'' in § 761.65(d)(2)(iv).

■ 28. By removing the phrase ''Regional Administrator (or Director, National Programs Chemical Division)'' and adding in its place ''appropriate EPA official'' in § 761.65(d)(2)(vii).

■ 29. By removing the phrase ''the Regional Administrator (or the Director, National Programs Chemical Division, if the commercial storage area is ancillary to a disposal facility approved by the Director, National Programs Chemical Division)'' and adding in its place ''EPA'' in §§ 761.65(d)(4), introductory text; 761.65(d)(4)(ii); 761.65(d)(4)(iv); and 761.65(e)(2).

■ 30. By removing the phrase ''shall be called in by the Regional Administrator or the Director, National Programs Chemical Division, if it was the Director, National Programs Chemical Division who issued it'' and adding in its place ''shall be called in by the Regional Administrator (or the

appropriate official at EPA Headquarters, if approval was granted by an official at EPA Headquarters)'' in § 761.65(d)(8).

■ 31. By removing the phrase ''may be submitted to the Regional Administrator or the Director, National Programs Chemical Division, in the cases where the Director, National Programs Chemical Division issued the approval'' and adding in its place ''may be submitted to the Regional Administrator or the Director, Office of Solid Waste, in the cases where an official at EPA Headquarters issued the approval'' in § 761.65(d)(8).

■ 32. By removing the phrase ''(or the Director, National Programs Chemical Division, if the commercial storage area is ancillary to a disposal facility approved by the Director, National Programs Chemical Division)'' and adding in its place ''(or the appropriate official at EPA Headquarters, if the commercial storage area is ancillary to a disposal facility for which an official at EPA Headquarters has approval authority)'' in §§ 761.65(e)(3) and 761.65(g)(4)(ii).

■ 33. By removing the phrase ''Director, National Programs Chemical Division, if he'' and adding in its place ''Director, Office of Solid Waste, if an official at EPA Headquarters'' in § 761.65(e)(4), introductory text.

■ 34. By removing the phrase ''Director, National Programs Chemical Division, if he'' and adding in its place ''appropriate official at EPA Headquarters, if an official at EPA Headquarters'' in § 761.65(e)(5).

■ 35. By removing the phrase ''Director, National Programs Chemical Division if he approved the closure plan'' and adding in its place ''Director, Office of Solid Waste, if an official at EPA Headquarters approved the closure plan'' in § 761.65(e)(6)(i).

■ 36. By removing the phrase ''the Regional Administrator or the Director, National Programs Chemical Division if he approved the closure plan,'' and adding in its place ''EPA'' in §§ 761.65(e)(6)(ii) and 761.65(e)(6)(iii).

■ 37. By removing the phrase ''the Regional Administrator or Director, National Programs Chemical Division if he approved the closure plan,'' and adding in its place ''EPA'' in § 761.65(e)(6)(iv).

■ 38. By removing the phrase ''Director, National Programs Chemical Division if he'' and adding in its place ''Director, Office of Solid Waste and Disposal, if an official at EPA Headquarters'' in § 761.65(e)(8).

■ 39. By removing the phrase ''the Regional Administrator (or the Director, National Programs Chemical Division, if he approved the closure plan)'' and adding in its place ''EPA'' in § 761.65(f)(3).

■ 40. By removing the phrase ''(or the Director, National Programs Chemical Division, if the commercial storage area is ancillary to a disposal facility approved by the Director CMD)'' and adding in its place ''(or the Director, Office of Solid Waste, if the commercial storage area is ancillary to a disposal facility approved by an official at EPA Headquarters)'' in § 761.65(g)(1)(ii).

■ 41. By removing the phrase ''the Regional Administrator or the Director, National Programs Chemical Division, if he approved the closure plan,'' and adding in its place ''EPA'' in § 761.65(h), everywhere it appears.

■ 42. By removing the phrase ''The Regional Administrator or the Director, National Programs Chemical Division, if he approved the closure plan, shall provide the owner or operator with a detailed written statement stating the reasons why he'' and adding in its place ''EPA shall provide the owner or operator with a detailed written statement stating the reasons why EPA'' in § 761.65(h).

§ 761.70 [Amended]

■ 43. By removing the phrase ''shall be approved by an EPA Regional Administrator or the Director, National Programs Chemical Division'' and adding in its place ''shall be approved by EPA'' in § 761.70(a), introductory text.

■ 44. By removing the phrase ''more than one region must be submitted to the Director, National Programs Chemical Division'' and adding in its place ''more than one region must be submitted to the Director, Office of Solid Waste'' in §§ 761.70(a), introductory text and 761.70(b), introductory text.

■ 45. By removing the phrase ''Director, National Programs Chemical Division'' and adding in its place ''appropriate official at EPA Headquarters'' in §§ 761.70(a)(7), last sentence and 761.70(a)(8), introductory text.

■ 46. By removing the phrase ''the appropriate EPA Regional Administrator or the Director, National Programs Chemical Division'' and adding in its place ''EPA'' in § 761.70(a)(9).

■ 47. By removing the phrase ''the Regional Administrator or the Director, National Programs Chemical Division'' and adding in its place ''EPA'' in §§ 761.70(a)(9), 761.70(d)(2)(i), everywhere it appears; 761.70(d)(2)(iii), everywhere it appears; and 761.70(d)(4)(ii), everywhere it appears.

■ 48. By removing the phrase ''The Regional Administrator or the Director, National Programs Chemical Division'' and adding in its place ''EPA'' in § 761.70(d)(2)(i).

■ 49. By removing the phrase ''shall be approved by the appropriate EPA Regional Administrator or the Director, National Programs Chemical Division'' and adding in its place ''shall be approved by EPA'' in § 761.70(b), introductory text.

■ 50. By removing the phrase ''Director, National Programs Chemical Division'' and adding in its place ''appropriate official at EPA Headquarters'' in §§ 761.70(d), introductory text, everywhere it appears and 761.70(d)(4)(i).

■ 51. By removing the phrase ''Director, National Programs Chemical Division'' and adding in its place ''Director, Office of Solid Waste'' in § 761.70(d)(1), introductory text.

■ 52. By removing the phrase ''If the Regional Administrator or the Director, National Programs Chemical Division determines'' and adding in its place ''If EPA determines'' in § 761.70(d)(2)(ii), introductory text.

■ 53. By removing the phrase ''shall submit to the Regional Administrator or the Director, National Programs Chemical Division'' and adding in its place ''shall submit to the Regional Administrator or the Director, Office of Solid Waste'' in § 761.70(d)(2)(ii), introductory text.

■ 54. By removing the phrase ''the Regional Administrator or the Assistant Administrator for Prevention, Pesticides and Toxic Substances'' and adding in its place ''EPA'' in § 761.70(d)(3), everywhere it appears .

■ 55. By removing the phrase ''may submit evidence to the Regional Administrator or the Director, National Programs Chemical Division'' and adding in its place ''may submit evidence to the Regional Administrator or the Director, Office of Solid Waste'' in § 761.70(d)(5), first sentence.

■ 56. By removing the phrase ''the Regional Administrator or the Director, National Programs Chemical Division may in his/her discretion'' and adding in its place ''EPA may, in its discretion,'' in § 761.70(d)(5), second sentence.

■ 57. By removing the phrase ''Regional Administrator or the Director, National Programs Chemical Division'' and adding in its place ''appropriate EPA official'' in § 761.70(d)(7).

§ 761.79 [Amended]

■ 58. By removing the phrase ''must apply in writing to the EPA Regional Administrator in the Region where the activity would take place, for decontamination activity occurring in a single EPA Region; or the Director of the

National Program Chemicals Division'' and adding in its place ''must apply in writing to the Regional Administrator in the Region where the activity would take place, for decontamination activity occurring in a single EPA Region; or to the Director, Office of Solid Waste'' in §§ 761.79(h)(1), 761.79(h)(2), and 761.79(h)(3).

§ 761.120 [Amended]

■ 59. By removing the phrase ''Director, Office of Pollution Prevention and Toxics at Headquarters'' and adding in its place ''Director, Office of Solid Waste'' in § 761.120(a)(3).

■ 60. By removing the phrase ''Director, Office of Pollution Prevention and Toxics'' and adding in its place ''Director, Office of Solid Waste'' in § 761.120(b), introductory text.

■ 61. By removing the phrase ''Director of the Office of Pollution Prevention and Toxics'' and adding in its place ''Director, Office of Solid Waste'' in § 761.120(b)(2).

■ 62. By removing the phrase ''Director of OPPT'' and adding in its place ''Director, Office of Solid Waste'' in § 761.120(c), everywhere it appears.

§ 761.125 [Amended]

■ 63. By removing the phrase ''(the Office of Prevention, Pesticides and Toxic Substances Branch)'' in §§ 761.125(a)(1)(i) and 761.125(a)(1)(ii).

■ 64. By removing the phrase ''(Pesticides and Toxic Substances Branch)'' in § 761.125(a)(1)(iii).

§ 761.130 [Amended]

■ 65. By removing the phrase ''from the Director, Environmental Assistance Division (7408), Office of Pollution Prevention and Toxics, U.S. Environmental Protection Agency, Room E–543B, 1200 Pennsylvania Ave., NW., Washington, DC 20460, Telephone: (202) 544–1404, TDD (202) 544–0551'' and adding in its place ''on EPA's PCB Web site at *http://www.epa.gov/pcb*, or from the Communications, Information and Resource Management Division, Office of Solid Waste (5305P), Environmental Protection Agency, 1200 Pennsylvania Ave., NW., Washington, DC 20460–0001'' in § 761.130(e).

§ 761.205 [Amended]

■ 66. By removing the phrase ''from the Operation Branch (7404), Office of Pollution Prevention and Toxics, Environmental Protection Agency, 401 M St. SW., Washington, DC 20460'' and adding in its place ''on EPA's PCB Web site at *http://www.epa.gov/pcb*, or from the Communications, Information and Resource Management Division, Office of Solid Waste (5305P), Environmental Protection Agency, 1200 Pennsylvania Ave., NW., Washington, DC 20460–0001'' in § 761.205(a)(3).

■ 67. By removing the phrase ''Chief, Operation Branch (7404), Office of Pollution Prevention and Toxics, Environmental Protection Agency, 1200 Pennsylvania Ave., NW., Washington, DC 20460'' and adding in its place ''Document Control Officer, Office of Solid Waste (5305P), Environmental Protection Agency, 1200 Pennsylvania Ave., NW., Washington, DC 20460–0001'' in § 761.205(d).

§§ 761.243 and 761.386 [Amended]

■ 68. By removing the phrase ''from the TSCA Assistance Information Service, Environmental Protection Agency, 1200 Pennsylvania Ave., NW., Washington, DC 20460'' and adding in its place ''on EPA's PCB Web site at *http://www.epa.gov/pcb*, or from the Communications, Information and Resource Management Division, Office of Solid Waste (5305P), Environmental Protection Agency, 1200 Pennsylvania Ave., NW., Washington, DC 20460–0001'' in §§ 761.243(a) and 761.386(e).

§ 761.398 [Amended]

■ 69. By removing the phrase ''Director, National Program Chemicals Division (NPCD), (7404), Office of Pollution Prevention and Toxics, 1200 Pennsylvania Ave., NW., Washington, DC'' and adding in its place ''Director, Office of Solid Waste (5301P), Environmental Protection Agency, 1200 Pennsylvania Ave., NW., Washington, DC 20460–0001'' in § 761.398(a).

■ 70. By removing the phrase ''the Director of NPCD'' and adding in its place ''EPA'' in § 761.398(a).

[FR Doc. E7–19841 Filed 10–5–07; 8:45 am]

BILLING CODE 6560–50–S

DEPARTMENT OF HOMELAND SECURITY

Federal Emergency Management Agency

44 CFR Part 65

[Docket No. FEMA–B–7738]

Changes in Flood Elevation Determinations

AGENCY: Federal Emergency Management Agency, DHS.

ACTION: Interim rule.

SUMMARY: This interim rule lists communities where modification of the Base (1% annual-chance) Flood Elevations (BFEs) is appropriate because of new scientific or technical data. New flood insurance premium rates will be calculated from the modified BFEs for new buildings and their contents.

DATES: These modified BFEs are currently in effect on the dates listed in the table below and revise the Flood Insurance Rate Maps (FIRMs) in effect prior to this determination for the listed communities.

From the date of the second publication of these changes in a newspaper of local circulation, any person has ninety (90) days in which to request through the community that the Mitigation Assistant Administrator of FEMA reconsider the changes. The modified BFEs may be changed during the 90-day period.

ADDRESSES: The modified BFEs for each community are available for inspection at the office of the Chief Executive Officer of each community. The respective addresses are listed in the table below.

FOR FURTHER INFORMATION CONTACT: William R. Blanton, Jr., Engineering Management Section, Mitigation Directorate, Federal Emergency Management Agency, 500 C Street, SW., Washington, DC 20472, (202) 646–3151.

SUPPLEMENTARY INFORMATION: The modified BFEs are not listed for each community in this interim rule. However, the address of the Chief Executive Officer of the community where the modified BFE determinations are available for inspection is provided.

Any request for reconsideration must be based on knowledge of changed conditions or new scientific or technical data.

The modifications are made pursuant to section 201 of the Flood Disaster Protection Act of 1973, 42 U.S.C. 4105, and are in accordance with the National Flood Insurance Act of 1968, 42 U.S.C. 4001 *et seq.*, and with 44 CFR part 65.

For rating purposes, the currently effective community number is shown and must be used for all new policies and renewals.

The modified BFEs are the basis for the floodplain management measures that the community is required to either adopt or to show evidence of being already in effect in order to qualify or to remain qualified for participation in the National Flood Insurance Program (NFIP).

These modified BFEs, together with the floodplain management criteria required by 44 CFR 60.3, are the minimum that are required. They should not be construed to mean that the community must change any existing ordinances that are more stringent in their floodplain

management requirements. The community may at any time enact stricter requirements of its own, or pursuant to policies established by the other Federal, State, or regional entities. The changes BFEs are in accordance with 44 CFR 65.4.

National Environmental Policy Act. This interim rule is categorically excluded from the requirements of 44 CFR part 10, Environmental Consideration. An environmental impact assessment has not been prepared.

Regulatory Flexibility Act. As flood elevation determinations are not within the scope of the Regulatory Flexibility Act, 5 U.S.C. 601–612, a regulatory flexibility analysis is not required.

Regulatory Classification. This interim rule is not a significant regulatory action under the criteria of section 3(f) of Executive Order 12866 of September 30, 1993, Regulatory Planning and Review, 58 FR 51735.

Executive Order 13132, Federalism. This interim rule involves no policies that have federalism implications under Executive Order 13132, Federalism.

Executive Order 12988, Civil Justice Reform. This interim rule meets the applicable standards of Executive Order 12988.

List of Subjects in 44 CFR Part 65

Flood insurance, Floodplains, Reporting and recordkeeping requirements.

■ Accordingly, 44 CFR part 65 is amended to read as follows:

PART 65—[AMENDED]

■ 1. The authority citation for part 65 continues to read as follows:

Authority: 42 U.S.C. 4001 *et seq.*; Reorganization Plan No. 3 of 1978, 3 CFR, 1978 Comp., p. 329; E.O. 12127, 44 FR 19367, 3 CFR, 1979 Comp., p. 376.

§ 65.4 [Amended]

■ 2. The tables published under the authority of § 65.4 are amended as follows:

State and county	Location and case No.	Date and name of newspaper where notice was published	Chief executive officer of community	Effective date of modification	Community No.
Alabama:					
Montgomery	City of Montgomery (07–04–2575P).	August 9, 2007; August 16, 2007; *The Montgomery Advertiser*.	The Honorable Bobby N. Bright, Mayor, City of Montgomery, P.O. Box 1111, Montgomery, AL 36101.	July 25, 2007	010174
Montgomery	Unincorporated areas of Montgomery County (07–04–2575P).	August 9, 2007; August 16, 2007; *The Montgomery Advertiser*.	The Honorable Todd Strange, Chairman, Montgomery County Board of Commissioners, 100 South Lawrence Street, Montgomery, AL 36104.	July 25, 2007	010278
Arizona:					
Pima	Town of Marana (06–09–BA80P).	July 19, 2007; July 26, 2007; *Arizona Daily Star*.	The Honorable Ed Honea, Mayor, Town of Marana, Marana Municipal Complex, 11555 West Civic Center Drive, Marana, AZ 85653.	July 5, 2007	040118
Yavapai	Town of Prescott Valley (07–09–0558P).	July 19, 2007; July 26, 2007; *Prescott Daily Courier*.	The Honorable Harvey Skoog, Mayor, Town of Prescott Valley, 7501 East Civic Circle, Prescott Valley, AZ 86314.	October 25, 2007	040121
Yavapai	Unincorporated areas of Yavapai County (07–09–0558P).	July 19, 2007; July 26, 2007; *Prescott Daily Courier*.	The Honorable Chip Davis, Chairman, Yavapai County Board of Supervisors, 10 South Sixth Street, Cottonwood, AZ 86326.	October 25, 2007	040093
Yavapai	Unincorporated areas of Yavapai County (07–09–0736P).	July 19, 2007; July 26, 2007; *Prescott Daily Courier*.	The Honorable Chip Davis, Chairman, Yavapai County Board of Commissioners, 10 South Sixth Street, Cottonwood, AZ 86326.	June 27, 2007	040093
California:					
Contra Costa	City of Pittsburg (06–09–BG10P).	August 9, 2007; August 16, 2007; *Contra Costa Times*.	The Honorable Ben Johnson, Mayor, City of Pittsburg, 65 Civic Avenue, Pittsburg, CA 94565.	November 15, 2007	060033
Orange	City of Huntington Beach (07–09–1170P).	August 16, 2007; August 23, 2007; *Huntington Beach Independent*.	The Honorable Gil Coerper, Mayor, City of Huntington Beach, 2000 Main Street, Huntington Beach, CA 92648.	July 30, 2007	065034
Sacramento	Unincorporated areas of Sacramento County (06–09–B222P).	August 30, 2007; September 6, 2007; *The Daily Recorder*.	The Honorable Don Nottoli, Chairman, Sacramento County Board of Supervisors, 700 H Street, Suite 2450, Sacramento, CA 95814.	December 6, 2007	060262
Sacramento	Unincorporated areas of Sacramento County (06–09–BF61P).	August 16, 2007; August 23, 2007; *The Daily Recorder*.	The Honorable Don Nottoli, Chair, Sacramento County Board of Supervisors, 700 H Street, Suite 2450, Sacramento CA 95814.	November 22, 2007	060262
Santa Barbara	Unincorporated areas of Santa Barbara County (07–09–0164P).	July 19, 2007; July 26, 2007; *Santa Barbara News-Press*.	The Honorable Brooks Firestone, Chairman, Santa Barbara County Board of Supervisors, 105 East Anapamu Street, Santa Barbara, CA 93101.	October 25, 2007	060331
Sonoma	Town of Windsor (07–09–1484X).	July 12, 2007; July 19, 2007; *The Press Democrat*.	The Honorable Steve Allen, Mayor, Town of Windsor, P.O. Box 100, Windsor, CA 95492.	October 18, 2007	060761
Colorado:					
Broomfield	City and County of Broomfield (07–08–0461P).	July 18, 2007; July 25, 2007; *The Broomfield Enterprise*.	The Honorable Karen Stuart, Mayor, City and County of Broomfield, One DesCombe Drive, Broomfield, CO 80020.	June 29, 2007	085073
Delaware:					
Kent	Unincorporated areas of Kent County (07–03–1056P).	August 22, 2007; August 29, 2007; *Dover Post*.	The Honorable P. Brooks Banta, President, Kent County Board of Commissioners, 555 Bay Road, Dover, DE 19901.	November 28, 2007	100001

State and county	Location and case No.	Date and name of newspaper where notice was published	Chief executive officer of community	Effective date of modification	Community No.
New Castle	Unincorporated areas of New Castle County (07–03–0823P).	July 13, 2007; July 20, 2007; *Newark Post*.	The Honorable Chris Coons, New Castle County Executive, 87 Read's Way, New Castle, DE 19720.	October 19, 2007	105085
New Castle	Unincorporated areas of New Castle County (07–03–0845P).	August 31, 2007; September 7, 2007; *Newark Post*.	The Honorable Christopher Coons, County Executive, New Castle County, 87 Reads Way Corporate Commons, New Castle, DE 19801.	December 7, 2007	105085
Georgia:					
Columbia	Unincorporated areas of Columbia County (07–04–1277P).	July 18, 2007; July 25, 2007; *Columbia County News-Times*.	The Honorable Ron C. Cross, Chairman, Columbia County Board of Commissioners, P.O. Box 498, Evans, GA 30809.	October 24, 2007	130059
Columbia	Unincorporated areas of Columbia County (07–04–1923P).	July 18, 2007; July 25, 2007; *Columbia County News-Times*.	The Honorable Ron Cross, Chairman, Columbia County Board of Commissioners, 908 Nerium Trail, Evans, GA 30809.	October 24, 2007	130059
Gwinnett	Unincorporated areas of Gwinnett County (07–04–3457P).	August 16, 2007; August 23, 2007; *Gwinnett Daily Post*.	The Honorable Charles Bannister, Chairman, Gwinnett County Board of Commissioners, 75 Langley Drive, Lawrenceville, GA 30045.	November 22, 2007	130322
Illinois:					
De Kalb	City of De Kalb (05–05–2302P).	July 19, 2007; July 26, 2007; *The Daily Chronicle*.	The Honorable Frank Van Buer, Mayor, City of De Kalb, 200 South Fourth Street, Room 203, De Kalb, IL 60115.	October 25, 2007	170182
Kansas:					
Johnson	City of Overland Park (07–07–0902P).	July 19, 2007; July 26, 2007; *Johnson County Sun*.	The Honorable Carl R. Gerlach, Mayor, City of Overland Park, City Hall, 8500 Santa Fe Drive, Overland Park, KS 66212.	June 29, 2007	200174
Johnson	Unincorporated areas of Johnson County (07–07–0902P).	July 19, 2007; July 26, 2007; *Johnson County Sun*.	The Honorable Annabeth Surbaugh, Chairman, Johnson County Board of Commissioners, 111 South Cherry Street, Suite 3300, Olathe, KS 66061–3441.	June 29, 2007	200159
Johnson	Unincorporated areas of Johnson County (07–07–1220P).	July 19, 2007; July 26, 2007; *Johnson County Sun*.	The Honorable Carl Gerlach, Mayor, City of Overland Park, City Hall, 8500 Santa Fe Drive, Overland Park, KS 66212.	June 25, 2007	200174
Kentucky:					
Oldham	City of Crestwood (07–04–1746P).	August 16, 2007; August 23, 2007; *The Oldham Era*.	The Honorable Dennis L. Deibel, Mayor, City of Crestwood, P.O. Box 186, Crestwood, KY 40014.	November 22, 2007	210027
Oldham	Unincorporated areas of Oldham County (07–04–1746P).	August 16, 2007; August 23, 2007; *The Oldham Era*.	The Honorable Duane Murner, Oldham County Judge/Executive, 100 West Jefferson Street, LaGrange, KY 40031.	November 22, 2007	210185
Maine:					
Knox	City of Rockland (07–01–0484P).	July 19, 2007; July 26, 2007; *The Courier-Gazette*.	The Honorable Brian Harden, Mayor, City of Rockland, 270 Pleasant Street, Rockland, ME 04841.	June 25, 2007	230076
Lincoln	Town of South Bristol (07–01–0772P).	August 16, 2007; August 23, 2007; *The Lincoln County News*.	The Honorable Kenneth Lincoln, Chairman of Selectmen, Town of South Bristol, 470 Clarks Cove Road, South Bristol, ME 04573.	July 31, 2007	230220
York	Town of Kittery (07–01–0122P).	June 14, 2007; June 21, 2007; *York County Coast Star*.	The Honorable Glenn Shwaery, Chair, Kittery Town Council, 200 Rogers Road, Kittery, ME 03904.	July 19, 2007	230171
Maryland:					
Anne Arundel	Unincorporated areas of Anne Arundel County (07–03–0081P).	August 23, 2007; August 30, 2007; *The Capital*.	The Honorable John R. Leopold, County Executive, Anne Arundel County, 44 Calvert Street, Annapolis, MD 21404.	November 29, 2007	240008
Frederick	Unincorporated areas of Frederick County (07–03–0394P).	August 16, 2007; August 23, 2007; *The Frederick News-Post*.	The Honorable John L. Thompson, Jr., Commissioner, County of Frederick, Winchester Hall, 12 East Church Street, Frederick, MD 21701.	November 22, 2007	240027
Massachusetts:					
Barnstable	Town of Falmouth (07–01–1028P).	August 23, 2007; August 30, 2007; *Cape Cod Times*.	The Honorable Kevin Murphy, Chairman, Falmouth Board of Selectmen, Falmouth Town Hall, 59 Town Hall Square, Falmouth, MA 02540.	November 29, 2007	255211
Michigan:					
Macomb	Charter Township of Clinton (07–05–2289P).	July 20, 2007; July 27, 2007; *Macomb County Legal News*.	The Honorable Robert J. Cannon, Township Supervisor, Charter Township of Clinton, 40700 Romeo Plank Road, Clinton Township, MI 48038.	July 6, 2007	260121
Oakland	City of Rochester Hills (06–05–BQ14P).	July 13, 2007; July 20, 2007; *Oakland County Legal News*.	The Honorable James Rosen, Mayor, City of Rochester Hills, 1000 Rochester Hills Drive, Rochester Hills, MI 48309.	June 19, 2007	260471
Minnesota:					

State and county	Location and case No.	Date and name of newspaper where notice was published	Chief executive officer of community	Effective date of modification	Community No.
Marshall	City of Warren (07–05–1900P).	July 19, 2007; July 26, 2007; *Messenger*.	The Honorable Bob Kliner, Mayor, City of Warren, 120 East Bridge Avenue, Warren, MN 56762.	June 27, 2007	270274
Marshall	Unincorporated areas of Marshall County (07–05–1900P).	July 19, 2007; July 26, 2007; *Messenger*.	The Honorable Sharon Bring, Chairman, Marshall County Board of Commissioners, County Courthouse, 208 East Colvin Avenue, Warren, MN 56762–1693.	October 25, 2007	270638
Missouri:					
St. Charles	City of Dardenne Prairie (07–07–0177P).	August 15, 2007; August 22, 2007; *St. Charles Journal*.	The Honorable Pam Fogarty, Mayor, City of Dardenne Prairie, 7137 Scotland Drive, Dardenne Prairie, MO 63368.	November 21, 2007	290899
St. Charles	City of O'Fallon (07–07–0177P).	August 15, 2007; August 22, 2007; *St. Charles Journal*.	The Honorable Donna Morrow, Mayor, City of O'Fallon, 633 Hawk Run Drive, O'Fallon, MO 63366.	November 21, 2007	290316
St. Charles	Unincorporated areas of St. Charles County (07–07–0177P).	August 15, 2007; August 22, 2007; *St. Charles Journal*.	The Honorable Steve Ehlmann, County Executive, St. Charles County, 201 North Second Street, St. Charles, MO 63301.	November 21, 2007	290315
St. Louis	City of Chesterfield (06–07–BA27P).	August 2, 2007; August 9, 2007; *The St. Louis Daily Record*.	The Honorable John Nations, Mayor, City of Chesterfield, Chesterfield City Hall, 690 Chesterfield Parkway West, Chesterfield, MO 63017–0760.	November 8, 2007	290896
St. Louis	City of Maryland Heights (06–07–B058P).	July 12, 2007; July 19, 2007; *The St. Louis Daily Record*.	The Honorable Mike Moeller, Mayor, City of Maryland Heights, 212 Millwell Drive, Maryland Heights, MO 63043.	August 23, 2007	290889
New Jersey:					
Passaic	Township of Little Falls (07–02–1082X).	August 9, 2007; August 16, 2007; *The Record*.	The Honorable Eugene Kulick, Mayor, Township of Little Falls, Township Government Offices, 225 Main Street, Little Falls, NJ 07424.	November 15, 2007	340401
Passaic	Borough of West Paterson (07–02–1082X).	August 9, 2007; August 16, 2007; *The Record*.	The Honorable Pat Lapore, Mayor, Borough of West Paterson, Municipal Building, Five Brophy Lane, West Paterson, NJ 07424.	November 15, 2007	340412
New Mexico:					
Bernalillo	City of Albuquerque (07–06–1930P).	August 2, 2007; August 9, 2007; *The Albuquerque Journal*.	The Honorable Martin J. Chavez, Mayor, City of Albuquerque, P.O. Box 1293, Albuquerque, NM 87103.	July 24, 2007	350002
Bernalillo	Unincorporated areas of Bernalillo County (07–06–1930P).	August 2, 2007; August 9, 2007; *The Albuquerque Journal*.	Mr. Thaddeus Lucero, County Manager, Bernalillo County, One Civic Plaza Northwest, Albuquerque, NM 87102.	July 24, 2007	350001
Ohio: Montgomery	City of Brookville (07–05–1072P).	July 28, 2007; August 4, 2007; *Centerville-Bellbrook Times*.	The Honorable David E. Seagraves, Mayor, City of Brookville, P.O. Box 10, Brookville, OH 45309.	November 5, 2007	390407
Oklahoma: Cleveland.	City of Moore (07–06–1613P).	August 30, 2007; September 6, 2007; *The Norman Transcript*.	The Honorable Glenn Lewis, Mayor, City of Moore, 301 North Broadway, Moore, OK 73160.	December 6, 2007	400044
Pennsylvania: Berks	Township of Lower Heidelberg (07–03–0867X).	July 12, 2007; July 19, 2007; *Readling Eagle*.	The Honorable R. David Seip, Chairman, Board of Supervisors, Lower Heidelberg Township, Township Offices, 720 Brownsville Road, Sinking Spring, PA 19608.	October 18, 2007	421077
Tennessee: Rutherford.	City of Murfreesboro (06–04–C283P).	April 26, 2007; May 3, 2007; *Daily News Journal*.	The Honorable Tommy Bragg, Mayor, City of Murfreesboro, 111 West Vine Street, Murfreesboro, TN 37130.	August 2, 2007	470168
Texas:					
Bexar	City of San Antonio (06–06–BF16P).	August 16, 2007; August 23, 2007; *Daily Commercial Recorder*.	The Honorable Phil Hardberger, Mayor, City of San Antonio, P.O. Box 839966, San Antonio, TX 78283.	November 22, 2007	480045
Bexar	Unincorporated areas of Bexar County (06–06–BF16P).	August 16, 2007; August 23, 2007; *Daily Commercial Recorder*.	The Honorable Nelson W. Wolff, Bexar County Judge, Bexar County Courthouse 233 North Pecos, Suite 420, San Antonio, TX 78207.	November 22, 2007	480035
Collin	City of Allen (06–06–BK36P).	August 23, 2007; August 30, 2007; *The Allen American*.	The Honorable Stephen Terrell, Mayor, City of Allen, 305 Century Parkway, Allen, TX 75013.	November 29, 2007	480131
Collin	City of McKinney (06–06–BH77P).	August 16, 2007; August 23, 2007; *McKinney Courier-Gazette*.	The Honorable Bill Whitfield, Mayor, City of McKinney, 222 North Tennessee, McKinney, TX 75069.	August 27, 2007	480135
Collin	City of Plano (07–06–0841P).	July 5, 2007; July 12, 2007; *Plano Star Courier*.	The Honorable Pat Evans, Mayor, City of Plano, 1520 Avenue K, Plano, TX 75074.	October 11, 2007	480140
Collin	City of Wylie (07–06–0948P).	July 25, 2007; August 1, 2007; *The Wylie News*.	The Honorable John Mondy, Mayor, City of Wylie, 2000 State Highway 78 North, Wylie, TX 75098.	June 28, 2007	480759
Comal	Unincorporated areas of Comal County (07–06–0880P).	July 19, 2007; July 26, 2007; *New Braunfels Herald-Zeitung*.	The Honorable Danny Scheel, Comal County Judge, 199 Main Plaza, New Braunfels, TX 78130.	October 26, 2007	485463

State and county	Location and case No.	Date and name of newspaper where notice was published	Chief executive officer of community	Effective date of modification	Community No.
Denton	City of Denton (07–06–0913P).	July 19, 2007; July 26, 2007; *Denton Record-Chronicle*.	The Honorable Perry McNeill, Mayor, City of Denton, 215 East McKinney Street, Denton, TX 76201.	October 25, 2007	480194
El Paso	City of El Paso (06–06–B807P).	August 23, 2007; August 30, 2007; *El Paso Times*.	The Honorable John Cook, Mayor, City of El Paso, City Hall, 10th Floor, Two Civic Center Plaza, El Paso, TX 79901.	August 6, 2007	480214
Harris	City of Houston (06–06–BG37P).	July 19, 2007; July 26, 2007; *Houston Chronicle*.	The Honorable Bill White, Mayor, City of Houston, P.O. Box 1562, Houston, TX 77251.	July 30, 2007	480296
Medina	Unincorporated areas of Medina County (07–06–0574P).	July 19, 2007; July 26, 2007; *Hondo Anvil Herald*.	The Honorable James E. Barden, Medina County Judge, Medina County Courthouse, 1100 16th Street, Room 101, Hondo, TX 78861.	June 29, 2007	480472
Palo Pinto	City of Mineral Wells (07–06–0680P).	July 19, 2007; July 26, 2007; *Mineral Wells Index*.	The Honorable Clarence Holliman, Mayor, City of Mineral Wells, 115 Southwest First Street, Mineral Wells, TX 76068.	October 25, 2007	480517
Parker	Town of Annetta North (07–06–0630P).	August 23, 2007; August 30, 2007; *Weatherford Democrat*.	The Honorable Ken Hall, Mayor, Town of Annetta North, P.O. Box 1238, Aledo, TX 76008.	November 29, 2007	481664
Parker	Unincorporated areas of Parker County (07–06–0630P).	August 23, 2007; August 30, 2007; *Weatherford Democrat*.	The Honorable Mark Riley, Parker County Judge, Parker County Courthouse, One Courthouse Square, Weatherford, TX 76086.	November 29, 2007	480520
Tarrant	City of Benbrook (07–06–1470X).	May 24, 2007; May 31, 2007; *Benbrook News*.	The Honorable Jerry Dittrich, Mayor, City of Benbrook, 911 Winscott Road, Benbrook, TX 76126.	August 30, 2007	480586
Tarrant	City of Fort Worth (07–06–1275P).	August 16, 2007; August 23, 2007; *Fort Worth Star-Telegram*.	The Honorable Mike J. Moncrief, Mayor, City of Fort Worth, 1000 Throckmorton St., Fort Worth, TX 76102.	November 22, 2007	480596
Tarrant	City of Keller (07–06–0822P).	July 20, 2007; July 22, 2007; *The Southlake Journal*.	The Honorable Pat McGrail, Mayor, City of Keller, P.O. Box 770, Keller, TX 76244.	June 29, 2007	480602
Tarrant	City of Southlake (07–06–0822P).	July 20, 2007; July 27, 2007; *The Southlake Journal*.	The Honorable Andy Wambsganss, Mayor, City of Southlake, 1400 Main Street, Southlake, TX 76092.	June 29, 2007	480612
Utah: Salt Lake	City of West Jordan (07–08–0330P).	August 9, 2007; August 16, 2007; *Salt Lake Tribune*.	The Honorable David B. Newton, Mayor, City of West Jordan, 2555 West Carson Lane, West Jordan, UT 84084.	July 20, 2007	490108
Wisconsin:					
La Crosse	City of La Crosse (07–05–2077P).	July 19, 2007; July 26, 2007; *The La Crosse Tribune*.	The Honorable Mark Johnsrud, Mayor, City of La Crosse, City Hall, 400 La Crosse Street, La Crosse, WI 54601.	June 29, 2007	555562
Racine	Unincorporated areas of Racine County (07–05–1468P).	July 19, 2007; July 26, 2007; *Journal Times*.	The Honorable William L. McReynolds, Racine County Executive, 730 Wisconsin Avenue, 10th Floor, Racine, WI 53403.	June 25, 2007	550347
Virginia: Roanoke	City of Roanoke (07–03–0789P).	August 16, 2007; August 23, 2007; *The Roanoke Times*.	The Honorable C. N. Harris, Mayor, City of Roanoke, 215 Church Avenue Southwest, Room 452, Roanoke, VA 24011.	September 29, 2007	510130

(Catalog of Federal Domestic Assistance No. 97.022, ''Flood Insurance.'')

Dated: October 1, 2007.

David I. Maurstad,

Federal Insurance Administrator of the National Flood Insurance Program, Department of Homeland Security, Federal Emergency Management Agency.

[FR Doc. E7–19840 Filed 10–5–07; 8:45 am]

BILLING CODE 9110–12–P

DEPARTMENT OF HOMELAND SECURITY

Federal Emergency Management Agency

44 CFR Part 67

Final Flood Elevation Determinations

AGENCY: Federal Emergency Management Agency, DHS.

ACTION: Final rule.

SUMMARY: Base (1% annual chance) Flood Elevations (BFEs) and modified BFEs are made final for the communities listed below. The BFEs and modified BFEs are the basis for the floodplain management measures that each community is required either to adopt or to show evidence of being already in effect in order to qualify or remain qualified for participation in the National Flood Insurance Program (NFIP).

DATES: The date of issuance of the Flood Insurance Rate Map (FIRM) showing BFEs and modified BFEs for each community. This date may be obtained by contacting the office where the maps are available for inspection as indicated on the table below.

ADDRESSES: The final BFEs for each community are available for inspection at the office of the Chief Executive Officer of each community. The respective addresses are listed in the table below.

FOR FURTHER INFORMATION CONTACT: William R. Blanton, Jr., Engineering Management Section, Mitigation Directorate, Federal Emergency Management Agency, 500 C Street, SW., Washington, DC 20472, (202) 646–3151.

SUPPLEMENTARY INFORMATION: The Federal Emergency Management Agency (FEMA) makes the final determinations listed below for the modified BFEs for each community listed. These modified elevations have been published in newspapers of local circulation and ninety (90) days have elapsed since that publication. The Mitigation Division Director of FEMA has resolved any appeals resulting from this notification.

This final rule is issued in accordance with section 110 of the Flood Disaster

Protection Act of 1973, 42 U.S.C. 4104, and 44 CFR part 67. FEMA has developed criteria for flood-plain management in floodprone areas in accordance with 44 CFR part 60.

Interested lessees and owners of real property are encouraged to review the proof Flood Insurance Study and FIRM available at the address cited below for each community.

The BFEs and modified BFEs are made final in the communities listed below. Elevations at selected locations in each community are shown.

National Environmental Policy Act. This final rule is categorically excluded from the requirements of 44 CFR part 10, Environmental Consideration. An environmental impact assessment has not been prepared.

Regulatory Flexibility Act. As flood elevation determinations are not within the scope of the Regulatory Flexibility Act, 5 U.S.C. 601–612, a regulatory flexibility analysis is not required.

Regulatory Classification. This final rule is not a significant regulatory action under the criteria of section 3(f) of Executive Order 12866 of September 30, 1993, Regulatory Planning and Review, 58 FR 51735.

Executive Order 13132, Federalism. This final rule involves no policies that have federalism implications under Executive Order 13132.

Executive Order 12988, Civil Justice Reform. This final rule meets the applicable standards of Executive Order 12988.

List of Subjects in 44 CFR Part 67

Administrative practice and procedure, Flood insurance, Reporting and recordkeeping requirements.

■ Accordingly, 44 CFR part 67 is amended as follows:

PART 67—[AMENDED]

■ 1. The authority citation for part 67 continues to read as follows:

Authority: 42 U.S.C. 4001 *et seq.*; Reorganization Plan No. 3 of 1978, 3 CFR, 1978 Comp., p. 329; E.O. 12127, 44 FR 19367, 3 CFR, 1979 Comp., p. 376.

§ 67.11 [Amended]

■ 2. The tables published under the authority of § 67.11 are amended as follows:

Flooding source(s)	Location of referenced elevation	* Elevation in feet (NGVD) + Elevation in feet (NAVD) # Depth in feet above ground modified	Communities affected
Iredell County, North Carolina and Incorporated Areas Docket No.: FEMA–D–7800 and FEMA–D–7660			
Back Creek	At the Rowan/Iredell County boundary	+760	Unincorporated Areas of Iredell County, Town of Mooresville.
	Approximately 100 feet downstream of Oakridge Farm Highway/NC Highway 150.	+801	
(North)	Approximately 1,500 feet upstream of the confluence with Third Creek.	+799	Unincorporated Areas of Iredell County, City of Statesville.
	Approximately 1,400 feet upstream of Arey Road (State Road 1337).	+811	
Tributary 1	Approximately 500 feet upstream of the confluence with Back Creek.	+760	Unincorporated Areas of Iredell County.
	Approximately 1.1 miles upstream of River Hill Road (State Road 2166).	+787	
Beaver Creek	At the confluence with Fifth Creek	+731	Unincorporated Areas of Iredell County.
	Approximately 1.7 miles upstream of River Hill Road (State Road 2166).	+772	
Tributary	At the confluence with Beaver Creek	+740	Unincorporated Areas of Iredell County.
	Approximately 0.8 mile upstream of the confluence with Beaver Creek.	+752	
Beaverdam Creek (West)	Approximately 250 feet downstream of the Rowan/Iredell County boundary.	+814	Unincorporated Areas of Iredell County.
	Approximately 30 feet upstream of the upstream-most Rowan/Iredell County boundary.	+851	
Bell Branch	At the confluence with South Yadkin River	+697	Unincorporated Areas of Iredell County.
	Approximately 2.4 miles upstream of Woodleaf Road (State Road 1003).	+752	
Big Kennedy Creek	At the confluence with Hunting Creek	+762	Unincorporated Areas of Iredell County.
	At the Iredell/Yadkin County boundary	+847	
Brushy Creek	At the confluence with Hunting Creek	+897	Unincorporated Areas of Iredell County.
	Approximately 0.7 mile upstream of the confluence of Pasture Bottom Creek.	+1,034	
Buffalo Shoals Creek	At the confluence with Catawba River	+765	Unincorporated Areas of Iredell County
	Approximately 0.5 mile upstream of New Sterling Road	+876	
Camel Branch	At the confluence with Rocky Creek (into South Yadkin River).	+829	Unincorporated Areas of Iredell County.

Flooding source(s)	Location of referenced elevation	* Elevation in feet (NGVD) + Elevation in feet (NAVD) # Depth in feet above ground modified	Communities affected
	Approximately 1,600 feet upstream of Jericho Road (State Road 1849).	+866	
Tributary 1	At the confluence with Camel Branch	+841	Unincorporated Areas of Iredell County.
	Approximately 0.5 mile upstream of the confluence with Camel Branch.	+858	
Catawba River	Approximately 0.6 mile downstream of Buffalo Shoals Road.	+762	Unincorporated Areas of Iredell County
	At the downstream side of Lookout Shoals Dam	+781	
Coddle Creek	At the Iredell/Cabarrus/Rowan County boundary	+674	Unincorporated Areas of Iredell County, Town of Mooresville.
	Approximately 0.4 mile upstream of the confluence with Coddle Creek Tributary 8.	+779	
Tributary 5	At the confluence with Coddle Creek	+695	Unincorporated Areas of Iredell County.
	Approximately 1.2 miles upstream of the confluence with Coddle Creek.	+730	
Tributary 6	At the confluence with Coddle Creek	+737	Unincorporated Areas of Iredell County.
	Approximately 1,600 feet upstream of the confluence with Coddle Creek.	+749	
Tributary 7	At the confluence with Coddle Creek	+759	Unincorporated Areas of Iredell County, Town of Mooresville.
	Approximately 0.4 mile upstream of the confluence with Coddle Creek.	+779	
Tributary 8	At the confluence with Coddle Creek	+762	Unincorporated Areas of Iredell County, Town of Mooresville.
	Approximately 0.5 mile upstream of the confluence with Coddle Creek.	+783	
Cornelius Creek (Lake Norman Cornelius Creek).	Approximately 0.6 mile downstream of Cornelius Road	+760	Unincorporated Areas of Iredell County, Town of Mooresville.
	Approximately 500 feet upstream of Rankin Hill Road	+769	
Dishmon Creek	At the confluence with Rocky Creek (into South Yadkin River).	+1,068	Unincorporated Areas of Iredell County.
	Approximately 1.1 mile upstream of the confluence with Rocky Creek (into South Yadkin River).	+1,094	
Dutchman Creek	At the confluence with Kinder Creek	+717	Unincorporated Areas of Iredell County.
	Approximately 0.8 mile upstream of Tomlin Road (State Road 1843).	+839	
Tributary 6	Approximately 100 feet downstream of the Iredell/Davie County boundary.	+820	Unincorporated Areas of Iredell County.
	Approximately 120 feet downstream of Sandy Springs Road (State Road 2105).	+909	
Dye Creek	At the confluence with Rocky River	+704	Unincorporated Areas of Iredell County, Town of Mooresville.
	Approximately 280 feet upstream of East McLelland Avenue.	+832	
Tributary	At the confluence with Dye Creek	+739	Town of Mooresville.
	Approximately 1.3 miles upstream of Briarcliff Road	+808	
East Fork Creek	At the confluence with Coddle Creek	+674	Unincorporated Areas of Iredell County.
	Approximately 400 feet upstream of Linwood Road (State Road 1150).	+712	
Fifth Creek	At the confluence with South Yadkin River	+703	Unincorporated Areas of Iredell County.
	Approximately 570 feet upstream of Whites Farm Road (State Road 1911N).	+832	
Fourth Creek	Approximately 1,000 feet downstream of the Iredell/Rowan County boundary.	+729	Unincorporated Areas of Iredell County, City of Statesville.
	Approximately 0.4 mile downstream of Antietam Road (State Road 1562).	+915	

Flooding source(s)	Location of referenced elevation	* Elevation in feet (NGVD) + Elevation in feet (NAVD) # Depth in feet above ground modified	Communities affected
Tributary 6	At the confluence with Fourth Creek	+731	Unincorporated Areas of Iredell County.
	Approximately 0.5 mile upstream of the confluence with Fourth Creek.	+737	
Tributary 7	At the confluence with Fourth Creek	+740	Unincorporated Areas of Iredell County.
	Approximately 0.5 mile upstream of the confluence with Fourth Creek.	+746	
Tributary 8	At the confluence with Fourth Creek	+748	Unincorporated Areas of Iredell County.
	Approximately 0.9 mile upstream of the confluence with Fourth Creek.	+763	
Free Nancy Branch	At the confluence with Fourth Creek	+792	City of Statesville.
	Approximately 250 feet upstream of North Race Street	+852	
Greasy Creek	At the confluence with Third Creek	+741	Unincorporated Areas of Iredell County.
	Approximately 1.8 mile upstream of the confluence with Third Creek.	+770	
Goble Creek	At the confluence with Buffalo Shoals Creek	+827	Unincorporated Areas of Iredell County.
	Approximately 1.4 miles upstream of I–40	+853	
Harve Creek	At the confluence with South Yadkin River	+834	Unincorporated Areas of Iredell County.
	Approximately 0.5 mile upstream of the confluence with South Yadkin River.	+860	
Hunting Creek	At the Iredell/Davie County boundary	+724	Unincorporated Areas of Iredell County.
	Approximately 0.4 mile upstream of Warren Bridge Road (State Road 1708).	+898	
I–L Creek	Approximately 0.4 mile upstream of the confluence with Third Creek.	+752	Unincorporated Areas of Iredell County, Town of Troutman.
	Approximately 0.4 mile upstream of Patterson Street	+909	
Kinder Creek	At the confluence with South Yadkin River	+713	Unincorporated Areas of Iredell County.
	Approximately 1.1 miles upstream of Old Mocksville Road (State Road 2158).	+731	
Tributary 1	At the confluence with Kinder Creek	+713	Unincorporated Areas of Iredell County.
	Approximately 0.5 mile upstream of Vaughn Mill Road (State Road 2145).	+727	
Tributary 1A	At the confluence with Kinder Creek Tributary 1	+713	Unincorporated Areas of Iredell County.
	Approximately 0.4 mile upstream of the confluence with Kinder Creek Tributary 1.	+728	
Little Creek (North)	At the Iredell/Davie County boundary	+798	Unincorporated Areas of Iredell County.
	Approximately 500 feet downstream of Hayes Farm Road (State Road 2144).	+823	
Little Creek (South)	At the Iredell/Rowan County boundary	+748	Unincorporated Areas of Iredell County.
	Approximately 800 feet upstream of Iredell/Rowan County boundary.	+755	
Little Rocky Creek	At the confluence with Patterson Creek	+824	Unincorporated Areas of Iredell County.
	Approximately 80 feet downstream of Hams Grove Road (State Road 2017).	+906	
Tributary 1	At the confluence with Little Rocky Creek	+851	Unincorporated Areas of Iredell County.
	Approximately 0.7 mile upstream of the confluence with Little Rocky Creek.	+876	
Long Branch	At the confluence with North Little Hunting Creek	+773	Unincorporated Areas of Iredell County.
	Approximately 600 feet upstream of Barnard Mill Road (State Road 1824).	+898	
Morrison Creek	Approximately 250 feet upstream of the confluence with Fourth Creek.	+798	Unincorporated Areas of Iredell County, City of Statesville.

Flooding source(s)	Location of referenced elevation	* Elevation in feet (NGVD) + Elevation in feet (NAVD) # Depth in feet above ground modified	Communities affected
	Approximately 1,820 feet upstream of Old Wilkesboro Road (State Road 1645).	+845	
North Little Hunting Creek	At the confluence with Hunting Creek	+771	Unincorporated Areas of Iredell County.
	At the Iredell/Yadkin County boundary	+813	
Norwood Creek	Approximately 0.6 mile downstream of State Park Road (SR 1321).	+761	Unincorporated Areas of Iredell County.
	Approximately 0.9 mile upstream of Ivey Ostwalt Road	+801	
Olin Creek	At the confluence with Patterson Creek	+796	Unincorporated Areas of Iredell County.
	Approximately 600 feet upstream of Eupeptic Springs Road (State Road 1858).	+907	
Pasture Bottom Creek	At the confluence with Brushy Creek	+992	Unincorporated Areas of Iredell County.
	Approximately 1.0 mile upstream of the confluence with Brushy Creek.	+1,035	
Patterson Creek	At the confluence with Rocky Creek (into South Yadkin River).	+789	Unincorporated Areas of Iredell County.
	Approximately 0.4 mile upstream of the confluence of Patterson Creek Tributary 2.	+916	
Tributary 1	At the confluence with Patterson Creek	+813	Unincorporated Areas of Iredell County.
	Approximately 530 feet downstream of Bussell Road (State Road 1894).	+828	
Tributary 2	At the confluence with Patterson Creek	+896	Unincorporated Areas of Iredell County.
	Approximately 0.7 mile upstream of the confluence with Patterson Creek.	+920	
Powder Spring	At the confluence with Norwood Creek	+780	Unincorporated Areas of Iredell County.
	Approximately 0.4 mile upstream of Pilgrim Circle	+901	
Branch	Approximately 0.4 mile downstream of State Park Road (SR 1321).	+761	Unincorporated Areas of Iredell County, Town of Troutman.
	Approximately 1.3 miles upstream of Hicks Creek Road	+800	
Reeder Creek	At the confluence with Lake Norman (Catawba River)	+764	Unincorporated Areas of Iredell County.
	Approximately 1,100 feet upstream of Rosebud Lane	+821	
Tributary 1	At the confluence with Reeder Creek	+782	Unincorporated Areas of Iredell County.
	Approximately 200 feet upstream of railroad	+803	
Reeds Creek	Approximately 150 feet downstream of U.S. Highway 21	+761	Unincorporated Areas of Iredell County, Town of Mooresville.
	Approximately 0.6 mile upstream of West Plaza Drive	+808	
Tributary 2	Upstream side of East Plaza Drive	+808	Unincorporated Areas of Iredell County, Town of Mooresville.
	Approximately 0.5 mile upstream of East Plaza Drive	+825	
Tributary 3	At the confluence with Reeds Creek Tributary 2	+817	Town of Mooresville.
	Approximately 0.4 mile upstream of the confluence with Reeds Creek Tributary 2.	+844	
Rocky Creek	At the upstream side of Perth Road	+760	Unincorporated Areas of Iredell County, Town of Troutman.
	Approximately 1.1 miles upstream of Perth Road	+774	
Rocky Creek (into South Yadkin River).	At the confluence with South Yadkin River	+732	Unincorporated Areas of Iredell County.
	Approximately 1.3 miles upstream of Branton Road (State Road 1601).	+1,115	
Rocky River	At the Iredell/Mecklenberg/Cabarrus County boundary	+688	Unincorporated Areas of Iredell County, Town of Mooresville.
	Approximately 2.1 miles upstream of Coddle Creek Highway.	+827	
Tributary 12	At the Iredell/Mecklenburg County boundary	+691	Unincorporated Areas of Iredell County.

Flooding source(s)	Location of referenced elevation	* Elevation in feet (NGVD) + Elevation in feet (NAVD) # Depth in feet above ground modified	Communities affected
	Approximately 1.2 miles upstream of the confluence with Rocky River.	+727	
Shinns Creek	At the confluence with Weathers Creek	+768	Unincorporated Areas of Iredell County, Town of Troutman.
	Approximately 2.8 miles upstream of Weathers Creek Road (State Road 2379 S).	+901	
Sills Creek	At the Iredell/Rowan County boundary	+813	Unincorporated Areas of Iredell County.
	Approximately 1,000 feet upstream of the Iredell/Rowan County boundary.	+825	
Snow Creek	At the confluence with South Yadkin River	+769	Unincorporated Areas of Iredell County.
	Approximately 100 feet upstream of the Alexander/Iredell County boundary.	+1,013	
South Fork Withrow Creek	At the confluence with Weathers Creek and Withrow Creek.	+746	Unincorporated Areas of Iredell County.
	Approximately 0.5 mile upstream of Winthrow Creek Road (State Road 2379 S).	+791	
South Yadkin River	At the Davie/Iredell/Rowan County boundary	+697	Unincorporated Areas of Iredell County.
	Approximately 100 feet upstream of the Alexander/Iredell County boundary.	+843	
Tributary 6	At the confluence with South Yadkin River	+709	Unincorporated Areas of Iredell County.
	Approximately 0.5 mile upstream of the confluence with South Yadkin River.	+709	
Tributary 7	At the confluence with South Yadkin River	+713	Unincorporated Areas of Iredell County.
	Approximately 1,940 feet upstream of the confluence with South Yadkin River.	+713	
Tributary 8	At the confluence with South Yadkin River	+716	Unincorporated Areas of Iredell County.
	Approximately 150 feet downstream of White Oak Branch Road (State Road 2162 W).	+716	
Third Creek	Approximately 100 feet downstream of the Iredell/Rowan County boundary.	+722	Unincorporated Areas of Iredell County, City of Statesville, Town of Troutman.
	Approximately 400 feet upstream of the Iredell/Alexander County boundary.	+915	
Tributary 1	At the confluence with Third Creek	+724	Unincorporated Areas of Iredell County.
	Approximately 1,900 feet upstream of Knox Farm Road (State Road 2363).	+735	
Tributary 2	At the confluence with Third Creek	+725	Unincorporated Areas of Iredell County.
	Approximately 0.8 mile upstream of the confluence with Third Creek.	+740	
Tributary 3	At the confluence with Third Creek	+730	Unincorporated Areas of Iredell County.
	Approximately 0.6 mile upstream of Cornflower Road	+752	
Tributary 3A	At the confluence with Third Creek Tributary 3	+730	Unincorporated Areas of Iredell County.
	Approximately 0.6 mile upstream of the confluence with Third Creek Tributary 3.	+744	
Tributary 3B	At the confluence with Third Creek Tributary 3	+741	Unincorporated Areas of Iredell County.
	Approximately 0.7 mile upstream of the confluence with Third Creek Tributary 3.	+757	
Tributary 4	At the confluence with Third Creek	+894	Unincorporated Areas of Iredell County.
	Approximately 0.4 mile upstream of the confluence with Third Creek.	+904	
Tributary 1	At the confluence with Fourth Creek	+770	City of Statesville.
	Approximately 2,000 feet upstream of the confluence with Fourth Creek.	+771	

Flooding source(s)	Location of referenced elevation	* Elevation in feet (NGVD) + Elevation in feet (NAVD) # Depth in feet above ground modified	Communities affected
Tributary 2	Approximately 700 feet upstream of the confluence with Third Creek.	+805	Unincorporated Areas of Iredell County, City of Statesville.
	Approximately 0.4 mile upstream of Johnson Drive	+863	
Tributary 2A	Approximately 500 feet upstream of the confluence with Third Creek.	+815	City of Statesville.
	Approximately 0.8 mile upstream of Newton Drive	+910	
Tributary 3	At the confluence with Fourth Creek	+785	Unincorporated Areas of Iredell County, City of Statesville.
	Approximately 1.2 miles upstream of Interstate 40	+839	
Tributary 4	Approximately 1,000 feet upstream of the confluence with Third Creek.	+798	City of Statesville.
	Approximately 130 feet downstream of Cochran Street	+858	
Tributary 5	Approximately 650 feet upstream of the confluence with Third Creek.	+772	City of Statesville.
	Approximately 0.8 mile upstream of the confluence with Third Creek.	+866	
Tributary 6	Approximately 500 feet upstream of the confluence with Third Creek.	+764	City of Statesville.
	Approximately 0.6 mile upstream of the confluence of Tributary 6B.	+853	
Tributary 6A	At the confluence with Tributary 6	+817	City of Statesville.
	Approximately 900 feet upstream of I–77 Highway	+843	
Tributary 6A1	At the confluence with Tributary 6A	+817	City of Statesville.
	Approximately 0.4 mile upstream of Tributary 6A	+857	
Tributary 6A2	At the confluence with Tributary 6A	+827	City of Statesville.
	Approximately 1,200 feet upstream of Tributary 6A	+846	
Tributary 6B	At the confluence with Tributary 6	+822	City of Statesville.
	Approximately 0.3 mile upstream of the confluence of Tributary 6B1.	+859	
Tributary 6B1	At the confluence with Tributary 6B	+829	City of Statesville.
	Approximately 880 feet upstream of the confluence with Tributary 6B.	+841	
Tuckers Creek	At the confluence with Patterson Creek	+878	Unincorporated Areas of Iredell County.
	Approximately 1.7 miles upstream of the confluence with Patterson Creek.	+942	
Weathers Creek	At the confluence with South Fork Withrow Creek and Withrow Creek.	+746	Unincorporated Areas of Iredell County.
	Approximately 1.4 miles upstream of Westmoreland Road (State Road 2390).	+837	
Tributary 1	At the confluence with Weathers Creek	+757	Unincorporated Areas of Iredell County.
	Approximately 0.6 mile upstream of the confluence with Weathers Creek.	+773	
West Branch Rocky River	At the Iredell/Mecklenberg County boundary	+687	Unincorporated Areas of Iredell County, Town of Mooresville.
	Approximately 0.5 mile upstream of Timber Road	+794	
Tributary	At the confluence with West Branch Rocky River	+713	Unincorporated Areas of Iredell County, Town of Mooresville.
	Approximately 0.9 mile upstream of Mott Road	+750	
Tributary 1	At the confluence with West Branch Rocky River	+695	Unincorporated Areas of Iredell County, Town of Mooresville.
	Approximately 0.7 mile upstream of Midway Lake Road (State Road 1137).	+734	
Tributary 2	At the confluence with West Branch Rocky River	+763	Town of Mooresville.
	Approximately 0.6 mile upstream of Timber Road	+806	
Westmoreland Creek	At the confluence with Weathers Creek	+761	Unincorporated Areas of Iredell County.
	Approximately 0.5 mile upstream of the confluence with Weathers Creek.	+771	
Withrow Creek	At the Rowan/Iredell County boundary	+743	Unincorporated Areas of Iredell County.

Flooding source(s)	Location of referenced elevation	* Elevation in feet (NGVD) + Elevation in feet (NAVD) # Depth in feet above ground modified	Communities affected
Woodleaf Branch (West)	At the confluence of South Fork Withrow Creek and Weathers Creek.	+746	Unincorporated Areas of Iredell County.
	Approximately 50 feet downstream of the Rowan/Iredell County boundary.	+765	
	Approximately 450 feet upstream of the Rowan/Iredell County boundary.	+767	

* National Geodetic Vertical Datum.
+ North American Vertical Datum.
# Depth in feet above ground.

ADDRESSES

City of Statesville

Maps are available for inspection at City of Statesville Planning Department, 301 South Center Street, Statesville, North Carolina.

Town of Mooresville

Maps are available for inspection at Town of Mooresville Planning Department, 413 North Main Street, Mooresville, North Carolina.

Town of Troutman

Maps are available for inspection at the Troutman Town Hall, 400 North Eastway Drive, Troutman, North Carolina 28166.

Unincorporated Areas of Iredell County

Maps are available for inspection at the Iredell County Planning Department, City Hall, 227 South Center Street, Statesville, North Carolina 28687.

(Catalog of Federal Domestic Assistance No. 97.022, ''Flood Insurance.'')

Dated: October 1, 2007.

David I. Maurstad,

Federal Insurance Administrator of the National Flood Insurance Program, Department of Homeland Security, Federal Emergency Management Agency.

[FR Doc. E7–19837 Filed 10–5–07; 8:45 am]

BILLING CODE 9110–12–P

DEPARTMENT OF COMMERCE

National Oceanic and Atmospheric Administration

50 CFR Part 679

[Docket No. 070213032–7032–01]

RIN 0648–XD07

Fisheries of the Exclusive Economic Zone Off Alaska; Pacific Ocean Perch in the Western Regulatory Area of the Gulf of Alaska

AGENCY: National Marine Fisheries Service (NMFS), National Oceanic and Atmospheric Administration (NOAA), Commerce.

ACTION: Temporary rule; prohibition of retention.

SUMMARY: NMFS is prohibiting retention of Pacific ocean perch in the Western Regulatory Area of the Gulf of Alaska (GOA). NMFS is requiring that Pacific ocean perch caught in this area be treated in the same manner as prohibited species and discarded at sea with a minimum of injury. This action is necessary because the 2007 total allowable catch (TAC) of Pacific ocean perch in this area has been reached.

DATES: Effective 1200 hrs, Alaska local time (A.l.t.), October 3, 2007, until 2400 hrs, A.l.t., December 31, 2007.

FOR FURTHER INFORMATION CONTACT: Jennifer Hogan, 907–586–7228.

SUPPLEMENTARY INFORMATION: NMFS manages the groundfish fishery in the GOA exclusive economic zone according to the Fishery Management Plan for Groundfish of the Gulf of Alaska (FMP) prepared by the North Pacific Fishery Management Council under authority of the Magnuson-Stevens Fishery Conservation and Management Act. Regulations governing fishing by U.S. vessels in accordance with the FMP appear at subpart H of 50 CFR part 600 and 50 CFR part 679.

The 2007 TAC of Pacific ocean perch in the Western Regulatory Area of the GOA is 4,244 metric tons as established by the 2007 and 2008 harvest specifications for groundfish of the GOA (72 FR 9676, March 5, 2007).

In accordance with § 679.20(d)(2), the Administrator, Alaska Region, NMFS, has determined that the Pacific ocean perch TAC in the Western Regulatory Area of the GOA has been reached. Therefore, NMFS is requiring that Pacific ocean perch caught in the Western Regulatory Area of the GOA be treated as prohibited species in accordance with § 679.21(b).

Classification

This action responds to the best available information recently obtained from the fishery. The Assistant Administrator for Fisheries, NOAA (AA), finds good cause to waive the requirement to provide prior notice and opportunity for public comment pursuant to the authority set forth at 5 U.S.C. 553(b)(B) as such requirement is impracticable and contrary to the public interest. This requirement is impracticable and contrary to the public interest as it would prevent NMFS from responding to the most recent fisheries data in a timely fashion and would delay the prohibition of retention of Pacific ocean perch in the Western Regulatory Area of the GOA. NMFS was unable to publish a notice providing time for public comment because the most recent, relevant data only became available as of October 1, 2007.

The AA also finds good cause to waive the 30-day delay in the effective date of this action under 5 U.S.C. 553(d)(3). This finding is based upon the reasons provided above for waiver of prior notice and opportunity for public comment.

This action is required by § 679.20 and is exempt from review under Executive Order 12866.

Authority: 16 U.S.C. 1801 *et seq.*

Dated: October 2, 2007.

Emily H. Menashes

Acting Director, Office of Sustainable Fisheries, National Marine Fisheries Service.

[FR Doc. 07–4966 Filed 10–3–07; 2:20 pm]

BILLING CODE 3510–22–S

Proposed Rules

Federal Register

Vol. 72, No. 194

Tuesday, October 9, 2007

This section of the FEDERAL REGISTER contains notices to the public of the proposed issuance of rules and regulations. The purpose of these notices is to give interested persons an opportunity to participate in the rule making prior to the adoption of the final rules.

DEPARTMENT OF ENERGY

Office of Energy Efficiency and Renewable Energy

10 CFR Part 430

[Docket No. EERE–2007–BT–STD–0010]

RIN 1904–AA89

Energy Efficiency Program for Certain Commercial and Industrial Equipment: Public Meeting and Availability of the Framework Document for Residential Clothes Dryers and Room Air Conditioners

AGENCY: Office of Energy Efficiency and Renewable Energy, Department of Energy.

ACTION: Notice of public meeting and availability of the Framework Document.

SUMMARY: The Department of Energy (DOE or Department) is initiating the rulemaking and data collection process that could result in the establishment of amended energy conservation standards for residential clothes dryers and room air conditioners. Accordingly, the Department will hold an informal public meeting to discuss and receive comments on issues it will address in this rulemaking proceeding. The Department also encourages written comments on these subjects. To inform stakeholders and facilitate this process, DOE has prepared a Framework Document, which is available at: *http://www.eere.energy.gov/buildings/appliance_standards/.*

DATES: The Department will hold a public meeting on Wednesday, October 24, 2007, from 9 a.m. to 5 p.m. in Washington, DC. Any person requesting to speak at the public meeting should submit such request along with a signed original and an electronic copy of statements to be given at the public meeting before 4 p.m., Tuesday, October 17, 2007. Written comments are welcome, especially following the public meeting, and should be submitted by Tuesday, November 6, 2007.

ADDRESSES: The public meeting will be held at the Holiday Inn Capitol, located at 550 C Street, SW., in Washington, DC 20024.

Stakeholders may submit comments, identified by docket number EERE–2007–BT–STD–0010 and/or RIN number 1904–AA89, by any of the following methods.

- *Federal eRulemaking Portal: http://www.regulations.gov.* Follow the instructions for submitting comments.
- *E-mail: home_appliance2.rulemaking@ee.doe.gov.* Include EERE–2007–BT–STD–0010 and/or RIN 1904–AA89 in the subject line of the message.
- *Mail:* Ms. Brenda Edwards-Jones, U.S. Department of Energy, Building Technologies Program, Mailstop EE–2J, Framework Document for Home Appliance Products, EERE–2007–BT–STD–0010 and/or RIN 1904–AA89, 1000 Independence Avenue, SW., Washington, DC 20585–0121. Please submit one signed paper original.
- *Hand Delivery/Courier:* Ms. Brenda Edwards-Jones, U.S. Department of Energy, Building Technologies Program, Room 1J–018, 1000 Independence Avenue, SW., Washington, DC 20585–0121. Telephone: (202) 586–2945. Please submit one signed paper original.

Instructions: All submissions received must include the agency name and docket number or Regulation Identifier Number (RIN) for this rulemaking.

Docket: For access to the docket to read background documents, a copy of the transcript of the public meeting, or comments received, go to the U.S. Department of Energy, Forrestal Building, Room 1J–018 (Resource Room of the Building Technologies Program), 1000 Independence Avenue, SW., Washington, DC 20585–0121, (202) 586–9127, between 9 a.m. and 4 p.m., Monday through Friday, except Federal holidays. Please call Ms. Brenda Edwards-Jones at the above telephone number for additional information regarding visiting the Resource Room. Please note that the Department's Freedom of Information Reading Room (Room 1E–190 at the Forrestal Building) is no longer housing rulemaking materials.

FOR FURTHER INFORMATION CONTACT: Stephen Witkowski, U.S. Department of Energy, Office of Energy Efficiency and Renewable Energy, Building Technologies, EE–2J, 1000 Independence Avenue, SW., Washington, DC 20585–0121. Telephone: (202) 586–7463. E-mail: *Stephen.Witkowski@ee.doe.gov.*

Francine Pinto or Eric Stas, U.S. Department of Energy, Office of the General Counsel, GC–72, 1000 Independence Avenue, SW., Washington, DC 20585–0121. Telephone: (202) 586–9507. E-mail: *Francine.Pinto@hq.doe.gov* or *Eric.Stas@hq.doe.gov.*

Regarding the public meeting, Brenda Edwards-Jones, U.S. Department of Energy, Building Technologies Program, Room 1J–018, 1000 Independence Avenue, SW., Washington, DC 20585. Telephone: (202) 586–2945. E-mail: *Brenda.Edwards-Jones@ee.doe.gov.*

SUPPLEMENTARY INFORMATION: Part B of Title III of the Energy Policy and Conservation Act of 1975 (EPCA), established an energy conservation program for major household appliances, which includes residential clothes dryers and room air conditioners. (42 U.S.C. 6291 *et seq.*) This program authorizes the Secretary of Energy (the Secretary) to establish energy conservation standards that are technologically feasible and economically justified, and would result in significant energy savings. (42 U.S.C. 6295(o)) Amendments to EPCA in the National Appliance Energy Conservation Act of 1987 (Pub. L. No. 100–12; NAECA) established prescriptive energy conservation standards for residential clothes dryers, initial energy conservation standards for room air conditioners, as well as requirements for determining whether these standards should be amended. (42 U.S.C. 6295(c) and (g))

The prescriptive standards for residential clothes dryers in EPCA, as amended, required that gas clothes dryers shall not be equipped with a constant burning pilot, and EPCA further required that DOE conduct two cycles of rulemakings to determine if more stringent standards are justified. (42 U.S.C. 6295(g)(3) and (4)) On May 14, 1991, DOE published a final rule in the **Federal Register** establishing the first set of performance standards for residential clothes dryers; the new standards became effective on May 14, 1994. 56 FR 22250. Subsequently, the Department initiated a second standards rulemaking for residential clothes dryers

by publishing an advance notice of proposed rulemaking (ANOPR) in the **Federal Register** on November 14, 1994. 59 FR 56423. However, pursuant to the priority-setting process outlined in the July 15, 1996, *Procedures for Consideration of New or Revised Energy Conservation Standards for Consumer Products*[1] (the ''Process Rule''), DOE classified the standards rulemaking for residential clothes dryers as a low priority for its fiscal year 1998 priority-setting process. As a result, DOE suspended the standards rulemaking for residential clothes dryers.

For room air conditioners, EPCA, as amended, established initial standards, and the statute also directed the Secretary to conduct two cycles of rulemakings to determine if more stringent standards are justified. (42 U.S.C. 6295(c)(1) and (2)) DOE initially analyzed standards for room air conditioners as part of an eight-product standards rulemaking. It issued a notice of proposed rulemaking (NOPR) on March 4, 1994, which, in part, proposed performance standards for room air conditioners. 59 FR 10464. As a result of the 1996 Process Rule, DOE suspended activities to finalize standards for room air conditioners. DOE subsequently resumed its rulemaking activities and refined its standards analysis of room air conditioners by taking into consideration comments from interested parties and analyzing additional candidate standard levels. On January 29, 1997, the Department published a notice announcing the availability of the supplemental analysis and reopening the record to include additional public comment, and that document also indicated of the standard levels the Department was inclined to promulgate in the final rule. 62 FR 4200. DOE issued a final rule revising the energy conservation standards for room air conditioners on September 24, 1997, with an effective date of October 1, 2000. 62 FR 50122.

To resume the rulemaking process for residential clothes dryers and to begin the required second cycle of the rulemaking process for room air conditioners, the Department prepared a Framework Document to explain the issues, analyses, and process it anticipates using for the development of energy efficiency standards for residential clothes dryers and room air conditioners. The focus of the public meeting will be to discuss the analyses and issues contained in various sections of the Framework Document. During the Department's presentation to stakeholders, the Department will discuss each item listed in the Framework Document as an issue for comment. In addition, the Department will also make a brief presentation on the rulemaking process for these products. The Department encourages those who wish to participate in the public meeting to obtain the Framework Document and to be prepared to discuss its contents. A copy of the Framework Document is available at: *http://www.eere.energy.gov/buildings/appliance_standards/.* However, public meeting participants need not limit their discussions to the topics in the Framework Document. The Department is also interested in receiving views concerning other relevant issues that participants believe would affect energy conservation standards for these products. The Department also invites all interested parties, whether or not they participate in the public meeting, to submit in writing by Wednesday, October 3, 2007, comments and information on the matters addressed in the Framework Document and on other matters relevant to consideration of standards for residential clothes dryers and room air conditioners.

The public meeting will be conducted in an informal, facilitated, conference style. There shall be no discussion of proprietary information, costs or prices, market shares, or other commercial matters regulated by the U.S. antitrust laws. A court reporter will be present to prepare a transcript of the meeting.

After the public meeting and the expiration of the period for submitting written statements, the Department will begin collecting data, conducting the analyses as discussed at the public meeting, and reviewing the comments received.

Anyone who would like to participate in the public meeting, receive meeting materials, or be added to the DOE mailing list to receive future notices and information regarding residential clothes dryers and room air conditioners, should contact Ms. Brenda Edwards-Jones at (202) 586–2945.

Issued in Washington, DC, on October 3, 2007.

Alexander A. Karsner,

Assistant Secretary, Energy Efficiency and Renewable Energy.

[FR Doc. E7–19808 Filed 10–5–07; 8:45 am]

BILLING CODE 6450–01–P

[1] 61 FR 36974 (July 15, 1996) (establishing 10 CFR Part 430, Subpart C, Appendix A).

DELAWARE RIVER BASIN COMMISSION

18 CFR Part 410

Amendments to the Water Quality Regulations, Water Code and Comprehensive Plan To Classify the Lower Delaware River as Special Protection Waters

AGENCY: Delaware River Basin Commission.

ACTION: Proposed Rule.

SUMMARY: The Commission will hold a public hearing to receive comments on proposed amendments to the Commission's *Water Quality Regulations, Water Code* and *Comprehensive Plan* to establish numeric values for existing water quality for the reach of the main stem Delaware River known as the ''Lower Delaware'' and on a permanent basis to assign this reach the SPW classification ''Significant Resource Waters'' (SRW). Since 2005, the Lower Delaware has carried the SRW classification on a temporary basis. Also proposed is language intended to clarify aspects of the SPW regulations that have been a source of confusion for some DRBC docket holders and applicants since the program was originally adopted in 1992 for point sources and in 1994 for non-point sources.

DATES: The public hearing will take place on December 4, 2007 at 2:30 p.m., and will continue until all those who wish to testify are afforded an opportunity to do so. Written comments will be accepted through the close of business on December 6, 2007. The Commission will hold two informational meetings on the proposed rulemaking, the first of which will be held on Thursday, October 25, 2007 from 7 p.m. to 9 p.m., and the second, on Thursday, November 1, 2007 from 7 p.m. to 9 p.m.

ADDRESSES: The public hearing on December 4 will be held at the Commission's office building, located at 25 State Police Drive, West Trenton, New Jersey. Driving directions are available on the Commission's Web site, *www.drbc.net.* Please do not rely on Internet mapping services as they may not provide accurate directions to the DRBC. Written comments may be submitted by e-mail to *paula.schmitt@drbc.state.nj.us;* by fax to Commission Secretary at 609–883–9522; by U.S. Mail to Commission Secretary, DRBC, P.O. Box 7360, West Trenton, NJ 08628–0360; or by overnight mail to Commission Secretary, DRBC, 25 State Police Drive, West Trenton, NJ 08628–

0360. In all cases, please include the commenter's name, address and affiliation if any in the comment document and include ''SPW'' in the subject line. The first of the two informational meetings will take place at the office of the Delaware and Raritan Canal Commission at the Prallsville Mills Complex, 33 Risler Street (Route 29) in Stockton, New Jersey on October 25. The second will take place in Room 315 of the Acopian Engineering Building at Lafayette College, High Street, Easton, Pennsylvania on November 1.

FOR FURTHER INFORMATION CONTACT: The current rule and the full text of the proposed amendments are posted on the Commission's Web site, *www.drbc.net,* along with supporting data, reports, maps, and related documents. Hard copies may be obtained by contacting Ms. Paula Schmitt at 609–883–9500, ext. 224. Please contact Commission Secretary Pamela Bush, 609–883–9500 ext. 203 with questions about the proposed rule or the rulemaking process.

SUPPLEMENTARY INFORMATION: The Special Protection Waters regulations, consisting of Section 3.10.3.A.1. of the Commission's *Water Quality Regulations,* are intended to maintain the quality of interstate waters where existing water quality is better than the established stream quality objectives. They include rules that discourage new and increased discharges to designated waters. Where such discharges are permitted, the rules ensure that incremental pollutant loadings and visual impacts are minimized, that minimum standards of treatment are applied, and that new loadings cause no measurable change from existing water quality, as defined by the rule, except toward natural conditions.

The SPW regulations currently include a table establishing the numeric values that define existing water quality in the stream reaches permanently classified by the Commission as SPW in 1992. These reaches are located within the Upper Delaware Scenic and Recreational River Corridor and the Middle Delaware Scenic and Recreational River Corridor, between Hancock, New York, at River Mile (RM) 330.7 and the southern boundary of the Delaware Water Gap National Recreation Area at RM 209.5. They include the main stem and portions of intrastate tributaries to the Delaware located within the boundaries of the scenic and recreational corridors. The locations of water quality control points between Hancock, New York and RM 209.5 are provided in a second table. The water quality control points are the locations used to assess water quality for purposes of defining and protecting it. No changes are proposed at this time to the permanent classifications and water quality control points that the Commission established in 1992.

The portion of the non-tidal Delaware River known as the ''Lower Delaware'' extends from the southern boundary of the Delaware Water Gap National Recreation Area at RM 209.5 to the head of tide at Trenton, New Jersey, RM 133.4. Since 2005, the SPW regulations have listed the main stem Lower Delaware River as ''Significant Resource Waters'' (SRW) on a temporary basis and have applied a portion of the SPW regulations to this reach. The temporary classification was made pending the development of numeric values for existing water quality in the Lower Delaware and a determination as to whether the SRW classification should be assigned to the entire reach or whether the alternative classification, ''Outstanding Basin Waters'' (OBW), should be used for those portions eligible for that classification by virtue of their inclusion in the National Wild and Scenic Rivers System. The proposed amendments would permanently classify the entire Lower Delaware reach as SRW. By incorporating into the regulation a set of numeric values for existing water quality at established Lower Delaware River water quality control points, the amendments also would allow all applicable provisions of the SPW regulations, including those for ''no measurable change'' to existing water quality as defined by the rule, to apply to projects within the Lower Delaware drainage.

Key provisions of the SPW regulations that will continue to apply within the drainage area to the Lower Delaware River if the proposed amendments are approved include the following: Sections 3.10.3 A.2.c.1. through 3., in part requiring that no new or expanded wastewater discharges may be permitted in waters classified as SPW until all non-discharge-load reduction alternatives have been fully evaluated and rejected because of technical or financial infeasibility; sections 3.10.3 A.2.d.1. through 7., setting forth requirements for wastewater treatment facilities; and sections 3.10.3 A.2.e.1. and 2., conditioning project approval on the existence of an approved Non-Point Source Pollution Control Plan for the project area and requiring that approval of a new or expanded withdrawal and/or wastewater discharge project be subject to the condition that new connections to the project system be limited to service areas regulated by a non-point source pollution control plan approved by the Commission.

If the proposed amendments are adopted, numeric values for twenty parameters will be established, defining existing water quality by rule for purposes of the SPW program at 24 water quality control points in the Lower Delaware River. The parameters include: Ammonia-ammonium NH_3–NH_4 (mg/l), chloride (mg/l), chlorophyll a (mg/m^3), dissolved oxygen (mg/l), dissolved oxygen saturation (%), E. coli (colonies/100 ml), enterococcus (colonies/100 ml), fecal coliform (colonies/100 ml), nitrate NO_3–N (mg/l), orthophosphate (mg/l), pH, specific conductance (umhos/cm), total dissolved solids (mg/l), total Kjeldahl nitrogen (mg/l), total nitrogen (mg/l), total phosphorus (mg/l), total suspended solids (mg/l), turbidity (NTU), alkalinity (mg/l), and hardness (mg/l). The proposed values are based upon five years of ambient water quality monitoring, from 2000 through 2004.

Adoption of numeric values for existing water quality and creation of a set of Boundary and Interstate Water Quality Control Points in the Lower Delaware River will mean that applicants seeking approval to construct new facilities or to expand existing facilities in the Lower Delaware drainage will be required for the first time to demonstrate that their new or increased discharges will cause no measurable degradation of existing water quality at the established water quality control points (sections 3.10.3 A.2.b.2. and 3.10.3 A.2.f.). As in the upper and middle portions of the non-tidal Delaware, the ''no measurable change'' requirement will apply whether a project discharges directly to the main stem or to a tributary. For certain main stem discharges, if minimum treatment standards alone do not ensure no measurable change at the downstream water quality control point, additional treatment may be required (section 3.10.3 A.2.b.2. in combination with section 3.10.3A.2.d.6.).

The amendments also would incorporate language intended to clarify aspects of the SPW regulations that have been a source of confusion for some DRBC docket holders and applicants since the program was originally adopted in 1992 for point sources and in 1994 for non-point sources. Notably, a new term—''substantial alterations or additions''—is proposed to be added to the Definitions section of the regulations and to be inserted in other sections of the rule to clarify which types of additions or alterations to existing wastewater treatment facilities will

trigger certain SPW requirements that are deemed appropriate in connection with capital investment projects. For projects involving existing facilities discharging to SPW—whether in the upper, middle or lower portion of the Delaware River—only substantial additions or alterations as defined by the rule will trigger the requirements that no such project may be approved until (1) all non-discharge load reduction alternatives have been fully evaluated and rejected because of technical or financial infeasibility (section 3.10.3.A.2.c.1.) (OBW and SRW discharges); (2) the applicant has demonstrated the technical and/or financial infeasibility of using natural wastewater treatment technologies for all or a portion of the incremental load (section 3.10.3.A.2.d.5.) (OBW, SRW and tributary discharges); (3) the Commission has determined that the project is demonstrably in the public interest as defined by the rule (section 3.10.3.A.2.c.3.) (SRW discharges); and (4) the minimum level of treatment to be provided for such projects is Best Demonstrable Technology as defined by the rule (section 3.10.3.A.2.d.6.) (direct OBW and SRW discharges). The proposed amendments further clarify that alterations limited to changes in the method of disinfection and/or the addition of treatment works for nutrient removal at existing facilities are not deemed to be ''substantial alterations or additions'' triggering the foregoing requirements.

In addition, the proposed amendments more clearly define the baseline to be used in measuring predicted changes to existing water quality and in evaluating the effect of discharge/load reduction alternatives and/or natural treatment alternatives for projects that involve substantial alterations or additions to existing facilities. Also noteworthy, a new paragraph is proposed to expressly authorize effluent trading between point sources to satisfy the requirement for no measurable change to existing water quality under certain circumstances.

Previous **Federal Register** notices concerning designation of the Lower Delaware River as Special Protection Waters include notices published on September 23, 2004 (69 FR 57008) (proposed designation), August 22, 2005 (70 FR 48923) (proposed extension), August 21, 2006 (71 FR 48497) (proposed extension), and August 22, 2007 (72 FR 46931) (proposed extension). The proposed and final versions of the initial designation and the subsequent extensions also were published on the Commission's Web site, *http://www.drbc.net.*

Dated: October 2, 2007.

Pamela M. Bush,

Commission Secretary.

[FR Doc. E7–19799 Filed 10–5–07; 8:45 am]

BILLING CODE 6360–01–P

ENVIRONMENTAL PROTECTION AGENCY

40 CFR Part 52

[EPA–R04–OAR–2007–0424–200746(b); FRL–8478–2]

Approval of Implementation Plans; South Carolina: Clean Air Interstate Rule

AGENCY: Environmental Protection Agency (EPA).

ACTION: Proposed rule.

SUMMARY: EPA is proposing to approve revisions to the South Carolina State Implementation Plan (SIP) submitted on August 14, 2007. These revisions will incorporate provisions related to the implementation of EPA's Clean Air Interstate Rule (CAIR), promulgated on May 12, 2005 and subsequently revised on April 28, 2006 and December 13, 2006, and the CAIR Federal Implementation Plans (FIPs) concerning sulfur dioxide (SO_2), nitrogen oxides (NO_X) annual, and NO_X ozone season emissions for the State of South Carolina, promulgated on April 28, 2006 and subsequently revised December 13, 2006. EPA is not proposing to make any changes to the CAIR FIPs, but is amending, to the extent EPA approves South Carolina's SIP revisions, the appropriate appendices in the CAIR FIP trading rules simply to note that approval.

On September 19, 2007, South Carolina requested that EPA only act on a portion of the August 14, 2007, submittal as an abbreviated SIP. Consequently, EPA is proposing to approve the abbreviated SIP revisions that address the methodology to be used to allocate annual and ozone season NO_X allowances under the CAIR FIPs as well as opt-in provisions for the SO_2, NO_X annual, and NO_X ozone season trading programs. South Carolina also requested that EPA approve compliance supplement pool provisions for the NO_X annual trading program.

In the Final Rules Section of this **Federal Register**, EPA is approving the State's SIP revision as a direct final rule without prior proposal because the Agency views this as a noncontroversial submittal and anticipates no adverse comments. A detailed rationale for the approval is set forth in the direct final rule. If no adverse comments are received in response to this rule, no further activity is contemplated. If EPA receives adverse comments, the direct final rule will be withdrawn and all public comments received will be addressed in a subsequent final rule based on this proposed rule. EPA will not institute a second comment period on this document. Any parties interested in commenting on this document should do so at this time.

DATES: Written comments must be received on or before November 8, 2007.

ADDRESSES: Submit your comments, identified by Docket ID No. EPA–R04–OAR–2007–0424, by one of the following methods:

1. *www.regulations.gov:* Follow the on-line instructions for submitting comments.

2. *E-mail: ward.nacosta@epa.gov.*

3. *Fax:* (404) 562–9019.

4. *Mail:* EPA–R04–OAR–2007–0424, Regulatory Development Section, Air Planning Branch, Air, Pesticides and Toxics Management Division, U.S. Environmental Protection Agency, Region 4, 61 Forsyth Street, SW., Atlanta, Georgia 30303–8960.

5. *Hand Delivery or Courier:* Nacosta C. Ward, Regulatory Development Section, Air Planning Branch, Air, Pesticides and Toxics Management Division, U.S. Environmental Protection Agency, Region 4, 61 Forsyth Street, SW., Atlanta, Georgia 30303–8960. Such deliveries are only accepted during the Regional Office's normal hours of operation. The Regional Office's official hours of business are Monday through Friday, 8:30 a.m. to 4:30 p.m., excluding federal holidays.

Please see the direct final rule which is located in the Final Rules section of this **Federal Register** for detailed instructions on how to submit comments.

FOR FURTHER INFORMATION CONTACT: Nacosta C. Ward, Regulatory Development Section, Air Planning Branch, Air, Pesticides and Toxics Management Division, U.S. Environmental Protection Agency, Region 4, 61 Forsyth Street, SW., Atlanta, Georgia 30303–8960. The telephone number is (404) 562–9140. Ms. Ward can also be reached via electronic mail at *ward.nacosta@epa.gov.*

SUPPLEMENTARY INFORMATION: For additional information see the direct final rule which is published in the Final Rules Section of this **Federal Register**.

Dated: September 26, 2007.

J.I. Palmer, Jr.,

Regional Administrator, Region 4.

[FR Doc. E7–19648 Filed 10–5–07; 8:45 am]

BILLING CODE 6560–50–P

ENVIRONMENTAL PROTECTION AGENCY

40 CFR Part 271

[EPA–RO5–RCRA–2007–0722; FRL–8478–4]

Michigan: Final Authorization of State Hazardous Waste Management Program Revision

AGENCY: Environmental Protection Agency (EPA).

ACTION: Proposed rule.

SUMMARY: Michigan has applied to EPA for final authorization of the changes to its hazardous waste program under the Resource Conservation and Recovery Act (RCRA). EPA has reviewed Michigan's application and has preliminarily determined that these changes satisfy all requirements needed to qualify for final authorization, and is proposing to authorize the State's changes.

DATES: Comments on this proposed rule must be received on or before November 8, 2007.

ADDRESSES: Submit your comments, identified by Docket ID No. EPA–R05–RCRA–2007–0722 by one of the following methods:

http://www.regulations.gov: Follow the on-line instructions for submitting comments.

E-mail: feigler.judith@epa.gov.

Mail: Ms. Judith Feigler, Michigan Regulatory Specialist, RCRA Programs Section, Land and Chemicals Division, U.S. Environmental Protection Agency, 77 West Jackson Blvd., Chicago, Illinois 60604.

Instructions: Direct your comments to Docket ID Number EPA–R05–RCRA–2007–0722. EPA's policy is that all comments received will be included in the public docket without change and may be made available online at *http://www.regulations.gov,* including any personal information provided, unless the comment includes information claimed to be Confidential Business Information (CBI) or other information whose disclosure is restricted by statute. Do not submit information that you consider to be CBI or otherwise protected through *http://www.regulations.gov* or e-mail. The *http://www.regulations.gov* Web site is an ''anonymous access'' system, which means EPA will not know your identity or contact information unless you provide it in the body of your comment. If you send an e-mail comment directly to EPA without going through *http://www.regulations.gov,* your e-mail address will be automatically captured and included as part of the comment that is placed in the public docket and made available on the Internet. If you submit an electronic comment, EPA recommends that you include your name and other contact information in the body of your comment and with any disk or CD–ROM you submit. If EPA cannot read your comment due to technical difficulties and cannot contact you for clarification, EPA may not be able to consider your comment. Electronic files should avoid the use of special characters or any form of encryption, and be free of any defects or viruses. For additional information about EPA's public docket, visit the EPA Docket Center homepage at *www.epagov/epahome/dockets.htm.*

Docket: All documents in the docket are listed in the *http://www.regulations.gov* index. Although listed in the index, some of the information is not publicly available, e.g., CBI or other information whose disclosure is restricted by statute. Certain other material, such as copyrighted material, will be publicly available only in hard copy. Publicly available docket materials are available either electronically in *http://www.regulations.gov* or in hard copy. You may view and copy Michigan's application from 9 a.m. to 4 p.m. at the following addresses: U.S. EPA Region 5, 77 West Jackson Blvd., Chicago, Illinois, contact: Judith Feigler (312) 886–4179; or Michigan Department of Environmental Quality, Constitution Hall, 525 W. Allegan St., Lansing, Michigan (mailing address P.O. Box 30241, Lansing, Michigan 48909), contact Ronda Blayer (517) 353–9548.

FOR FURTHER INFORMATION CONTACT: Ms. Judith Feigler, Michigan Regulatory Specialist, RCRA Programs Section, Land and Chemicals Division, U.S. Environmental Protection Agency, 77 West Jackson Blvd., Chicago, Illinois 60604, (312) 886–4179, e-mail *feigler.judith@epa.gov.*

SUPPLEMENTARY INFORMATION:

A. Why Are Revisions to State Programs Necessary?

States which have received final authorization from EPA under RCRA section 3006(b), 42 U.S.C. 6926(b), must maintain a hazardous waste program that is equivalent to, consistent with, and no less stringent than the federal program. As the federal program changes, states must change their programs and ask EPA to authorize the changes. Changes to state programs may be necessary when federal or state statutory or regulatory authority is modified or when certain other changes occur. Most commonly, states must change their programs because of changes to EPA's regulations in 40 Code of Federal Regulations (CFR) parts 124, 260 through 266, 268, 270, 273 and 279.

B. What Decisions Have We Made in This Rule?

We have preliminarily determined that Michigan's application to revise its authorized program meets all of the statutory and regulatory requirements established by RCRA. Therefore, we propose to grant Michigan final authorization to operate its hazardous waste program with the changes described in the authorization application. Michigan will have responsibility for permitting treatment, storage, and disposal facilities (TSDFs) within its borders (except in Indian Country) and for carrying out the aspects of the RCRA program described in its revised program application, subject to the limitations of the Hazardous and Solid Waste Amendments of 1984 (HSWA). New federal requirements and prohibitions imposed by federal regulations that EPA promulgates under the authority of HSWA take effect in authorized states before they are authorized for the requirements. Thus, EPA will implement those requirements and prohibitions in Michigan, including issuing permits, until the state is granted authorization to do so.

C. What Will Be the Effect if Michigan Is Authorized for These Changes?

If Michigan is authorized for these changes, a facility in Michigan subject to RCRA will have to comply with the authorized state requirements instead of the equivalent federal requirements in order to comply with RCRA. Additionally, such persons will have to comply with any applicable federal requirements, such as HSWA regulations issued by EPA for which the state has not received authorization, and RCRA requirements that are not supplanted by authorized state-issued requirements. Michigan has enforcement responsibilities under its state hazardous waste program for violations of such program, but EPA retains its authority under RCRA sections 3007, 3008, 3013, and 7003, which include, among others, authority to:

1. Do inspections, and require monitoring, tests, analyses or reports;

2. enforce RCRA requirements and suspend or revoke permits; and

3. take enforcement actions regardless of whether the state has taken its own actions.

This proposed action would not impose additional requirements on the regulated community because the regulations for which Michigan would be authorized are already effective, and would not be changed by the act of authorization.

D. What Happens if EPA Receives Comments on This Action?

If EPA receives comments on this proposed action, we will address those comments in a later final rule. You may not have another opportunity to comment. If you want to comment on this authorization, you must do so at this time.

E. What Has Michigan Previously Been Authorized for?

Michigan initially received final authorization on October 16, 1986, effective October 30, 1986 (51 FR 36804–36805) to implement the RCRA hazardous waste management program. We granted authorization for changes to Michigan's program on November 24, 1989, effective January 23, 1990 (54 FR 48608); on January 24, 1991, effective June 24, 1991 (56 FR 18517); on October 1, 1993, effective November 30, 1993 (58 FR 51244); on January 13, 1995, effective January 13, 1995 (60 FR 3095); on February 8, 1996, effective April 8, 1996 (61 FR 4742); on November 14, 1997, effective November 14, 1997 (62 FR 61775); on March 2, 1999, effective June 1, 1999 (64 FR 10111); on July 31, 2002, effective July 31, 2002 (67 FR 49617); and on March 9, 2006, effective March 9, 2006 (71 FR 12141).

F. What Changes Are We Proposing?

On May 21, 2007, Michigan submitted a complete program revision application seeking authorization of its changes in accordance with 40 CFR 271.21. We have preliminarily determined that Michigan's hazardous waste management program revision satisfies all requirements necessary to qualify for final authorization. Therefore, we propose to grant Michigan final authorization for the following program changes:

Description of Federal requirement	Revision checklist [1]	**Federal Register** date and page	Analogous state authority
Mineral Processing Secondary Materials Exclusion.	167D	May 26, 1998, 63 FR 28556 ...	Michigan Administrative Code, R 299.9202(1)(b)(iii) and R 299.9204(1)(v), effective December 16, 2004
NESHAP: Surface Coating of Automobiles and Light-Duty Trucks.	205	April 26, 2004, 69 FR 22601 ...	Michigan Combined Laws, 324.11105a(1) and (2), effective December 29, 2006.[2]

[1] Revision Checklists generally reflect changes made to the federal regulations pursuant to a particular **Federal Register** notice and EPA publishes these checklists as aids to states to use for the development of their authorization application. See EPA's RCRA State Authorization Web Page at *http://www.epa.gov/epaoswer/hazwaste/state/.*

[2] The legislation we are proposing to authorize contains a ''sunset provision'' by which the substantive requirements of the state legislation will lapse after a period of three years unless the legislature explicitly reauthorizes it. It is EPA's position that once program revisions are authorized, the substantive requirements of the legislation will remain federally enforceable and our authorization of the revised program will persist, until the state requests and receives authorization of superseding program revisions, despite any lapse in the legal effect or enforceability of statutory authority on the state level.

G. Where Are the Revised State Rules Different From the Federal Rules?

There are no state requirements in this program revision considered to be more stringent or broader in scope than the analogous federal requirements.

H. Who Handles Permits After the Authorization Takes Effect?

Michigan will continue to issue permits for all the provisions for which it is authorized and will administer the permits it issues. EPA will continue to administer any RCRA hazardous waste permits or portions of permits which we issued prior to the effective date of this authorization until they expire or are terminated. We will not issue any more new permits or new portions of permits for the provisions listed in the Tables above after the effective date of this authorization. EPA will continue to implement and issue permits for HSWA requirements for which Michigan is not yet authorized.

I. How Would Authorizing Michigan for These Revisions Affect Indian Country (18 U.S.C. 1151) in Michigan?

Michigan is not authorized to carry out its hazardous waste program in Indian country within the state, as defined in 18 U.S.C. 1151. This includes:

1. All lands within the exterior boundaries of Indian reservations within the State of Michigan;

2. Any land held in trust by the U.S. for an Indian tribe; and

3. Any other land, whether on or off an Indian reservation that qualifies as Indian country.

Therefore, authorizing Michigan for these revisions would not affect Indian County in Michigan. EPA would continue to implement and administer the RCRA program in Indian country. It is EPA's long-standing position that the term ''Indian lands'' used in past Michigan hazardous waste approvals is synonymous with the term ''Indian country.'' *Washington Dep't of Ecology* v. *U.S. EPA*, 752 F.2d 1465, 1467, n.1 (9th Cir. 1985). *See* 40 CFR 144.3 and 258.2.

J. What Is Codification and Is EPA Codifying Michigan's Hazardous Waste Program as Authorized in This Rule?

Codification is the process of placing the state's statutes and regulations that comprise the state's authorized hazardous waste program into the Code of Federal Regulations. We do this by referencing the authorized state rules in 40 CFR part 272. Michigan's rules, up to and including those revised October 19, 1991, have previously been codified through incorporation-by-reference effective April 24, 1989 (54 FR 7421, February 21, 1989); as amended effective March 31, 1992 (57 FR 3724, January 31, 1992). We reserve the amendment of 40 CFR part 272, subpart X, for the codification of Michigan's program changes until a later date.

K. Statutory and Executive Order Reviews

This proposed rule only authorizes hazardous waste requirements pursuant to RCRA 3006 and imposes no requirements other than those imposed by State law (see **SUPPLEMENTARY INFORMATION**, Section A. Why are Revisions to State Programs Necessary?). Therefore this rule complies with applicable executive orders and statutory provisions as follows:

1. Executive Order 18266: Regulatory Planning Review

The Office of Management and Budget has exempted this rule from its review

under Executive Order 12866 (58 FR 51735, October 4, 1993).

2. Paperwork Reduction Act

This rule does not impose an information collection burden under the provisions of the Paperwork Reduction Act of 1995 (44 U.S.C. 3501 et seq.).

3. Regulatory Flexibility Act

After considering the economic impacts of today's rule on small entities under the Regulatory Flexibility Act (5 U.S.C. 601 et seq.), I certify that this rule will not have a significant economic impact on a substantial number of small entities.

4. Unfunded Mandates Reform Act

Because this rule approves pre-existing requirements under state law and does not impose any additional enforceable duty beyond that required by state law, it does not contain any unfunded mandate or significantly or uniquely affect small governments, as described in the Unfunded Mandates Reform Act of 1995 (Pub. L. 104–4).

5. Executive Order 13132: Federalism

Executive Order 13132 (64 FR 43255, August 10, 1999) does not apply to this rule because it will not have federalism implications (i.e., substantial direct effects on the States, on the relationship between the national government and the States, or on the distribution of power and responsibilities among the various levels of government).

6. Executive Order 13175: Consultation and Coordination With Indian Tribal Governments

Executive Order 13175 (65 FR 67249, November 9, 2000) does not apply to this rule because it will not have tribal implications (i.e., substantial direct effects on one or more Indian tribes, on the relationship between the federal government and Indian tribes, or on the distribution of power and responsibilities between the federal government and Indian tribes.)

7. Executive Order 13045: Protection of Children From Environmental Health and Safety Risks

This rule is not subject to Executive Order 13045 (62 FR 19885, April 23, 1997), because it is not economically significant as defined in Executive Order 12866 and because the EPA does not have reason to believe the environmental health or safety risks addressed by this action present a disproportionate risk to children.

8. Executive Order 13211: Actions That Significantly Affect Energy Supply, Distribution, or Use

This rule is not subject to Executive Order 13211 (66 FR 28355, May 22, 2001), because it is not a significant regulatory action as defined in Executive Order 12866.

9. National Technology Transfer Advancement Act

EPA approves State programs as long as they meet criteria required by RCRA, so it would be inconsistent with applicable law for EPA, in its review of a State program, to require the use of any particular voluntary consensus standard in place of another standard that meets requirements of RCRA. Thus, the requirements of section 12(d) of the National Technology Transfer and Advancement Act of 1995 (15 U.S.C. 272 note) do not apply to this rule.

10. Executive Order 12988

As required by section 3 of Executive Order 12988 (61 FR 4729, February 7, 1996), in issuing this rule, EPA has taken the necessary steps to eliminate drafting errors and ambiguity, minimize potential litigation, and provide a clear legal standard for affected conduct.

11. Executive Order 12630: Evaluation of Risk and Avoidance of Unanticipated Takings

EPA has complied with Executive Order 12630 (53 FR 8859, March 18, 1988) by examining the takings implications of the rule in accordance with the Attorney General's Supplemental Guidelines for the Evaluation of Risk and Avoidance of Unanticipated Takings issued under the executive order.

12. Executive Order 12898: Federal Actions to Address Environmental Justice in Minority Populations and Low Income Populations

Because this rule proposes authorization of pre-existing state rules and imposes no additional requirements beyond those imposed by state law and there are no anticipated significant adverse human health or environmental effects, the rule is not subject to Executive Order 12898 (59 FR 7629, February 16, 1994).

List of Subjects in 40 CFR Part 271

Environmental protection, Administrative practice and procedure, Confidential business information, Hazardous materials transportation, Hazardous waste, Indian-lands, Intergovernmental relations, Penalties, Reporting and recordkeeping requirements.

Authority: This action is issued under the authority of sections 2002(a), 3006 and 7004(b) of the Solid Waste Disposal Act as amended, 42 U.S.C. 6912(a), 6926, 6974(b).

Dated: September 26, 2007.

Bharat Mathur,

Acting Regional Administrator, Region 5.

[FR Doc. E7–19634 Filed 10–5–07; 8:45 am]

BILLING CODE 6560–50–P

DEPARTMENT OF TRANSPORTATION

National Highway Traffic Safety Administration

49 CFR Part 571

[Docket No. NHTSA–2007–28517]

RIN 2127–AK05

Federal Motor Vehicle Safety Standards; Electric-Powered Vehicles: Electrolyte Spillage and Electrical Shock Protection

AGENCY: National Highway Traffic Safety Administration (NHTSA), Department of Transportation (DOT).

ACTION: Notice of proposed rulemaking (NPRM).

SUMMARY: Based on concern that the agency's standard on electric-powered vehicles, as currently written, may inadvertently hinder the development of fuel cell vehicles in the United States, NHTSA is proposing to amend the electrical safety requirements of Federal Motor Vehicle Safety Standard (FMVSS) No. 305, *Electric-powered vehicles: electrolyte spillage and electrical shock protection.* The amendment would ensure that state-of-the-art fuel cell vehicles (FCVs) are consistent with the interests of safety and encompassed by FMVSS No. 305 so that the market may continue to develop. This NPRM also proposes to harmonize FMVSS No. 305 with the revised FMVSS No. 301, as regards rear moving barrier impact test conditions. This rulemaking commenced in response to a petition from the Alliance of Automobile Manufacturers.

DATES: You should submit your comments early enough to ensure that Docket Management receives them not later than December 10, 2007. Proposed effective date of final rule: assuming that a final rule is issued, NHTSA proposes that the changes adopted by the rule would be mandatory for fuel cell vehicles manufactured on or after exactly one year from the date of publication of the final rule in the **Federal Register**, with optional early compliance.

ADDRESSES: You may submit comments [identified by DOT Docket ID Number NHTSA–2007–28517] by any of the following methods:

- *Federal eRulemaking Portal:* Go to *http://www.regulations.gov*. Follow the online instructions for submitting comments.
- *Mail:* Docket Management Facility: U.S. Department of Transportation, 1200 New Jersey Avenue, SE., West Building Ground Floor, Room W12–140, Washington, DC 20590–0001.
- *Hand Delivery or Courier:* West Building Ground Floor, Room W12–140, 1200 New Jersey Avenue, SE., between 9 a.m. and 5 p.m. ET, Monday through Friday, except Federal holidays.
- *Fax:* 202–493–2251.

Instructions: For detailed instructions on submitting comments and additional information on the rulemaking process, see the Public Participation heading of the Supplementary Information section of this document. Note that all comments received will be posted without change to *http://www.regulations.gov,* including any personal information provided. Please see the Privacy Act heading below.

Privacy Act: Anyone is able to search the electronic form of all comments received into any of our dockets by the name of the individual submitting the comment (or signing the comment, if submitted on behalf of an association, business, labor union, etc.). You may review DOT's complete Privacy Act Statement in the **Federal Register** published on April 11, 2000 (65 FR 19477–78) or you may visit *http://DocketInfo.dot.gov*.

Docket: For access to the docket to read background documents or comments received, go to *http://www.regulations.gov* or the street address listed above. Follow the online instructions for accessing the dockets.

FOR FURTHER INFORMATION CONTACT: For technical issues, you may call Mr. Charles Hott, Office of Rulemaking (Telephone: 202–366–0247) (Fax: 202–493–2990). For legal issues, you may call Ms. Rebecca Schade, Office of Chief Counsel (Telephone: 202–366–2992) (Fax: 202–366–3820). You may send mail to these officials at National Highway Traffic Safety Administration, U.S. Department of Transportation, 1200 New Jersey Avenue, SE., West Building, Washington, DC 20590.

SUPPLEMENTARY INFORMATION:

Table of Contents

I. Background
II. Petitioner's Suggested Changes; NHTSA's Decisions on the Petition
A. Fuel cell vehicles and FMVSS No. 305's isolation requirement
B. Test Procedure Measurement Values
C. Test Procedure Measurement Location on the Vehicle
D. Setting 0.2 Joules as an Appropriate Low Energy Threshold
E. Harmonizing FMVSS No. 305's Rear Impact Test Procedure with FMVSS No. 301
III. International Harmonization
IV. The Proposed Rule
V. Benefits/Costs
VI. Public Participation
VII. Rulemaking Analyses and Notices

I. Background

Vehicles that use electricity as propulsion power can contain high voltage systems operating with several hundred volts at a time, as compared to conventional petroleum-powered vehicles, which usually contain only a 12-volt battery to power accessories like headlights, radios, and so forth. Thus, electric vehicles potentially pose electrical risks not posed by conventional petroleum-powered vehicles. During a crash, NHTSA requires electric vehicles to limit electrolyte spillage, retain energy storage devices, and maintain isolation between the vehicle's chassis and high-voltage system (49 Code of Federal Regulations (CFR) Part 571.305, ''Electric-powered vehicles: electrolyte spillage and electrical shock protection;'' also referred to as Federal Motor Vehicle Safety Standard (FMVSS) No. 305). Maintaining electrical isolation ensures that the high voltage system does not use the chassis itself to complete (or close) the circuit. This makes it less likely that a human or other object could touch the chassis and become part of the circuit, allowing electrical current to flow through them. FMVSS No. 305 is intended to protect occupants, rescue workers, or others who may come in contact with the vehicle after a crash from electrical shock hazards, by ensuring isolation of the vehicle's high voltage battery electrical system.

FMVSS No. 305 was originally drafted based on a voluntary consensus standard, the Society of Automotive Engineers (SAE) Recommended Practice for Electric and Hybrid Electric Vehicle Battery Systems Crash Integrity Testing (SAE J1766). SAE J1766 was first issued in 1996 and most recently updated in April 2005 in order to accommodate fuel cell vehicles (FCVs), based on concerns that SAE J1766 and FMVSS No. 305's electrical isolation requirements had not considered FCVs when they were originally developed.[1]

In order to bring FMVSS No. 305 back into line with the updates to SAE J1766, the Alliance of Automobile Manufacturers (''the Alliance'') petitioned NHTSA to conduct rulemaking to amend the requirements of FMVSS No. 305 so that FCV manufacturers would know the performance requirements required to comply with the FMVSSs and so that FCV development could proceed without hindrance. NHTSA is issuing this NPRM in order to promote our national policy goal of developing the hydrogen FCV market consistent with the interests of safety. The agency anticipates that current state-of-the-art FCVs, whether they contain AC or DC high voltage systems, will be able to meet the requirements of this proposed rule with virtually no design changes necessary.

II. Petitioner's Suggested Changes; NHTSA's Decisions on the Petition

In this section, the preamble sets forth the petition's many suggested changes to FMVSS No. 305's requirements. These are marked in bullet format, and are followed by NHTSA's response to each suggested change. As will be discussed, NHTSA generally tentatively agrees with most of the petitioner's suggestions. To the extent the agency does not agree, the reasons for disagreeing are explained.

NHTSA generally concurs with the petitioner's suggested amendments to FMVSS No. 305's requirements (except as noted) because the agency tentatively concludes that the changes would achieve the policy objective of aiding the development of the hydrogen FCV market consistent with the interests of safety. NHTSA agrees with the petitioner that not undertaking rulemaking could potentially interfere with development of the FCV market, as FCV manufacturers are currently uncertain of how to test electrical isolation in FCVs with liquid coolant loops.[2] An additional benefit of this

[1] FMVSS No. 305 currently contains a 500 ohms/volt electrical isolation requirement, with isolation measured between the high voltage propulsion battery and the chassis. FCVs are designed with coolant loops to cool down very hot fuel cells during operation, and the coolant tends to become more conductive of electrical current over time, and able to convey electrical current to the vehicle chassis; *i.e.*, the conductivity of the coolant causes the vehicle to be unable to maintain electrical isolation.

[2] Under the current FMVSS No. 305, electrical isolation is measured only between the high voltage propulsion battery and the chassis, and functionally often ends up not being measured, because there is typically no voltage to be found downstream of the contactors that disconnect high voltage from the battery in the event of a crash. The proposed FMVSS No. 305 would measure electrical isolation between all high voltage sources and the chassis, clarifying vehicle manufacturers' obligations in terms of ensuring electrical isolation.

rulemaking becoming final would be closer harmonization with international and voluntary industry consensus standards.

A. Fuel Cell Vehicles and FMVSS No. 305's Isolation Requirement

FMVSS No. 305 currently requires an electrical isolation of 500 ohms/volt.[3] That isolation must be maintained between the vehicle's propulsion battery and chassis after frontal, side, and rear crash tests, and was based upon the shock hazard for alternating current (AC). The standard does not distinguish between AC and DC (direct current) types of electrical current. Also, the standard calculates isolation values using voltage readings only between the propulsion battery and the chassis, and not from other potential high voltage sources that may cause a shock hazard, such as fuel cells. Fuel cells and converters that change DC electrical current into AC to supply propulsion motors used in some electric-motor vehicle designs are not currently required to maintain electrical isolation from the chassis.

• The petitioner states that the current 500 ohms/volt isolation requirement of FMVSS No. 305's paragraph S5.3 is not achievable for state-of-the-art FCVs, because they require a liquid coolant to dissipate the heat generated in the fuel cell, and the coolant itself is unavoidably an electrical conductor.[4] The petitioner argues that the updated SAE J1766 allowance for an isolation level of 100 ohms/volt under certain defined conditions does not lower the level of safety currently provided by FMVSS No. 305, because it is well within the range of safety for DC current, and because the provision "* * * is directly tied to a requirement to continuously monitor electrical isolation in service, with the obvious implication that driver warnings and other appropriate remedial actions will be taken if isolation drifts below the specified 100 ohms/volt level."

NHTSA's response: We are proposing to set the electrical isolation for DC at 125 ohms/volt, not 100 ohms/volt.[5] As noted above, FMVSS No. 305 currently requires 500 ohms/volt electrical isolation, which corresponds to 2 milliamps of body current for AC systems.[6] To produce the same physiological effects (at least, before the onset of serious physical harm), the human body can withstand up to four times the amount of DC as AC. Thus, the DC current corresponding to the existing FMVSS No. 305 requirement for AC (2 milliamps) would be $2 \times 4 = 8$ milliamps DC current. 8 milliamps of current corresponds to 125 ohms/volt electrical isolation for DC, not 100 ohms/volt.[7] This NPRM thus proposes to set the electrical isolation for DC at 125 ohms/volt.

B. Test Procedure Measurement Values

The electrical isolation test procedure of FMVSS No. 305, contained in S7.6, essentially consists of: (1) Identifying the propulsion battery terminal that has the highest voltage differential between it and the vehicle chassis; (2) inserting a resistor of known value between that terminal and the vehicle chassis; and (3) measuring the voltage difference between the vehicle chassis and the battery terminal. With those measurements, the post-crash isolation resistance is determined according to a formula provided in the standard.

• The petitioner requested that FMVSS No. 305 be amended to recognize voltages of less than 60 VDC or 30 VAC as an appropriate way to provide electrical safety protection, as the revised SAE J1766 already does. The Alliance pointed out that most electric vehicle designs use electrical contactors to disconnect high voltage from the propulsion battery in the event of a crash or other loss of isolation. Thus, they argued that the electrical isolation test procedure of FMVSS No. 305 is inappropriate for such designs, because the voltage differential between the high voltage system and the chassis would be zero, which would put a zero in the denominator of the equation to calculate isolation. The Alliance noted that FMVSS No. 305 does not recognize the absence of voltage as evidence of electrical safety, and therefore petitioned that the standard be revised to recognize voltages of less than 60 VDC or 30 VAC as an appropriate way to provide electrical safety protection.

NHTSA's response: We agree that FMVSS No. 305 is not explicit that a voltage measurement of zero in the test procedure is evidence of electrical safety. We tentatively agree that it would be evidence of electrical safety, and are therefore proposing to change the test requirement in S5.3 from "electrical isolation" to "electrical safety," so that "electrical isolation" becomes only one of the alternative requirements for "electrical safety," along with a requirement that voltage between the vehicle chassis and the high voltage source be less than 60 VDC or 30 VAC. We believe that these changes would clarify the issue raised by the petitioner.

• The petitioner noted that NHTSA had previously expressed concern over the lack of a viable test procedure to test FCVs with hydrogen, but emphasized the importance of proceeding with this rulemaking in order not to hamper development of FCVs, and expressed its view that the test procedure was a detail that could be worked out later.

NHTSA's response: The problem of not having a viable test procedure is that, for the safety of the testers, crash tests are generally performed with vehicles left unfueled or fueled with a less volatile alternative substance. However, FMVSS No. 305 and its formulas for calculating electrical isolation require that an electrical output measurement be available during the pretest and post-test phases of the various crash tests. Fuel cells without hydrogen, or filled with anything else,[8] generate no electricity from which to measure electrical output. A determination as to whether FMVSS No. 305 will require further amendment to address FCV testing will await the results of ongoing research, and will not be addressed in this rulemaking.

C. Test Procedure Measurement Location on the Vehicle

FMVSS No. 305 (as well as previous versions of SAE J1766) currently requires the measurement of electrical isolation in only one location, between

[3] For the reader's reference, ohms are a measure of electrical resistance, or how much the material of an electrical circuit resists the flow of electricity (thus, a higher number indicates more resistance), and volts are a measure of voltage, or how much electrical potential there is between any two points in a circuit (or, how much force is required to push the electrical current through the circuit).

[4] SAE J1766 (rev. April 2005) states that "The conductivity of [the aqueous] coolant is a key factor in the isolation characteristics of a fuel cell. Coolant conductance [of electrical current] increases with time which decreases isolation."

[5] It should be remembered that electrical isolation (ohms/volt) is a measure of a material's resistance to electrical current passing through it: thus, a higher electrical isolation means that less current passes through.

[6] Based on Figure 1 in IEC–479, International Electrotechnical Commission, Technical Report: Effects of current on human beings and livestock—Part 1: General aspects (3rd ed., Sept. 1994). The agency received this as part of a presentation included in the Alliance's petition for rulemaking. Available for public viewing in the Office of Crashworthiness Standards, National Highway Traffic Safety Administration, 1200 New Jersey Avenue, SE., West Building, Washington, DC 20590.

[7] Based on Figure 2, id. The agency received this as part of a presentation included in the Alliance's petition for rulemaking. According to the same chart, 100 ohms/volt corresponds to 5 times the amount of DC as AC, which is beyond the accepted range of physical safety.

[8] Such as helium, as suggested by SAE J2578, "Recommended Practice for General Fuel Cell Safety."

the high voltage bus [9] and the vehicle chassis. If a vehicle has electrical contactors located within the battery pack, this single measurement is taken between the downstream side of the contactor and the vehicle chassis.

• The petitioner requested that FMVSS No. 305 be amended to mirror the revised SAE J1766, which specifies several electrical isolation verification locations instead of just one: (1) Across the high voltage bus bar; (2) between the high voltage source and the vehicle chassis; (3) between the high voltage return and the vehicle chassis; and (4) between the conductive energy storage device and the vehicle chassis.

NHTSA's response: We are proposing to change and add several definitions to FMVSS No. 305 in order to address this request. We agree that measurements should be taken from all high voltage sources for calculating electrical isolation from the vehicle chassis, because the risk of electric shock can come from any high voltage source and not just from the propulsion motor batteries. Additionally, we recognize that some electric-powered vehicles may have both AC and DC high voltage sources. Revised SAE J1766 added new definitions for energy storage devices, which take into consideration the fact that ultra-capacitors [10] have replaced propulsion batteries in some electric-powered vehicle designs.

We therefore propose to add a new definition to S4 of FMVSS No. 305, to define ''high voltage source'' as either an electrical power-generating device or an energy storage device that produces voltage levels equal to or greater than 30 VAC or 60 VDC.[11] Other proposed changes to S4 include the addition of a definition for ''electrical isolation,'' to reflect that isolation measurements are to be taken between any high-voltage source and the vehicle's chassis; and the deletion of the existing definition for ''battery system component'' and its replacement with a definition for ''energy storage system'' which includes ultra-capacitors, high voltage batteries, and their associated hardware. Several other sections of FMVSS No. 305 would also be amended to reflect the changes proposed above.

D. Setting 0.2 Joules as an Appropriate Low Energy Threshold

• The petitioner requested that FMVSS No. 305 also be amended to mirror revised SAE J1766 insofar as that standard specifies an energy level below 0.2 joules as another appropriate way to provide electrical safety protection. The petitioner noted that the 0.2 joules of energy value specified in SAE J1766 was derived using data from the IEC 479–1 charts, and is non-harmful.[12] The petitioner also noted for comparison that static electricity, which can involve voltages of more than 10,000 volts, is nevertheless benign to human health due to the low current and short durations associated with discharge.

NHTSA's response: We are seeking comments on the inclusion of 0.2 joules as an appropriate low energy threshold in FMVSS No. 305 to reflect that low amounts of electrical energy are acceptable. The agency remains less than fully convinced of the need for this amendment. The SAE's methodology, assuming a 10 ms duration of contact, does not seem realistic in the context of an automobile crash, and in fact would be much more typical as a result of static buildup than a fault contact with a high voltage electrical system after a crash.

Additionally, NHTSA is concerned about the practicality of measuring a mere 0.2 joules of energy in a crash test environment. Comment to help the agency resolve this issue is requested.

E. Harmonizing FMVSS No. 305's Rear Impact Test Procedure With FMVSS No. 301

The original version of FMVSS No. 305 [13] incorporated the rear moving barrier test of FMVSS No. 301, *Fuel System Integrity*, which at the time was a 30 mph (48 km/h) test. In a 2004 final rule, response to petitions for reconsideration on FMVSS No. 301,[14] the agency amended FMVSS No. 305 to give manufacturers the option of conducting either a rigid moving barrier 48–km/h test, or an upgraded–FMVSS No. 301 moving deformable barrier 80–km/h test. We stated that:

Prior to the upgrade of the FMVSS No. 301 rear moving barrier impact test, compliance with the FMVSS Nos. 301 and 305 rear moving barrier requirements was based on similar test conditions and procedures. The similarity in test conditions gave manufacturers of gas-electric hybrid vehicles the opportunity to conduct one test instead of two to determine compliance with the two sets of rear impact requirements. Gas-electric hybrid vehicles with a GVWR of 4,536 kg or less are subject to the rear moving impact requirements of both FMVSS Nos. 301 and 305, if they use both liquid fuel and more than 48 nominal volts of electricity as propulsion power. As a result of the FMVSS No. 301 upgrade, compliance with the FMVSS Nos. 301 and 305 rear moving barrier requirements is no longer based on similar test conditions and procedures. The differences in the conditions and procedures could eliminate the opportunity to conduct one test instead of two for gas-electric hybrid vehicles. To reinstate the opportunity to conduct two tests instead of one, we are amending FMVSS No. 305 to permit compliance with the electrolyte spillage, battery retention and electrical isolation rear moving barrier impact requirements of FMVSS No. 305 under the upgraded FMVSS No. 301 rear moving barrier test conditions.[15]

• The petitioner requested that the rear impact test speed of FMVSS No. 305 should be amended to correspond with the 80 km/h speed now required by FMVSS No. 301. The petitioner also stated that this would align FMVSS No. 305 with the recently amended Canadian Motor Vehicle Safety Standard 305, which requires the 80 km/h speed for vehicles produced after September 1, 2009.

NHTSA's response: We are proposing to amend FMVSS No. 305 to specify only the 80 km/h test. NHTSA agrees that the rear test speed for FMVSS No. 305 should reflect the speed required in FMVSS No. 301, which is currently being phased in and will be required for all vehicles with liquid fuel systems manufactured after September 1, 2009. As noted by the Alliance, this change would also facilitate harmonization with Canadian Standard 305. Therefore, NHTSA proposes to amend FMVSS No. 305 to specify only the 80 km/h rear impact test, with S6.2 and S7.4 changed accordingly.

III. International Harmonization

As long as safety is preserved, NHTSA believes that the same voltage should be used worldwide to denote high voltage systems, because vehicle manufacturers (and ultimately, consumers) can expect to achieve cost savings through the harmonization of different sets of standards. However, NHTSA is not ready just yet to harmonize fully with other international standards. Globally, there are several existing regulations and standards that pertain to high voltage systems in electric-powered

[9] A high voltage bus (or bus-bar) is a distribution location where multiple connections are made for the electrical circuits.

[10] Ultra-capacitors act like batteries in that they store electrical energy and pose the same electrical safety hazards as batteries, except for electrolyte spillage.

[11] We note that unlike SAE J1766, which specifies ''high-voltage systems'' as greater than 60 VDC or 30 VAC, ECE R.100 specifies high-voltage systems as greater than 60 VDC or *25* VAC. The AC high voltage value may eventually change in the final rule to make the definition consistent, pending the development of an internationally-consistent definition of high-voltage system through a global technical regulation (see discussion in Section III below, ''International Harmonization'').

[12] This was based on 200 mA of current, with a duration of 10 ms and a voltage of 200V with a safety factor of 2.

[13] The final rule promulgating FMVSS No. 305 is available at 65 FR 57980–57992 (Sept. 27, 2000).

[14] 69 FR 51393 (Aug. 19, 2004).

[15] Id., at 51396.

motor vehicles. The agency has been collaborating with the international community to develop a global technical regulation (GTR) for hydrogen-powered motor vehicles through its active participation in the United Nations World Forum for the Harmonization of Vehicle Regulations (WP.29). It has been agreed by WP.29 that a GTR be developed for hydrogen-powered motor vehicles. The United States, Germany, and Japan as sponsors have completed development of an action plan that outlines the key safety areas of hydrogen and FCVs for the GTR. The definition of high voltage systems in automobiles would likely be part of the development of this GTR.

The existing requirements in the European regulation, ECE R.100, ''Uniform provisions concerning the approval of battery electric vehicles with regard to specific requirements for the construction, functional safety and hydrogen emission,'' specify that battery-powered electric vehicles must maintain 500 ohms/volt electrical isolation between the propulsion battery and the vehicle chassis. This is similar to the requirement in FMVSS No. 305. NHTSA is aware that the ECE is currently considering changing this requirement to meet a 100 ohms/volt electrical isolation between the high voltage system and the vehicle chassis, without distinguishing between AC (greater than 25 volts) or DC (greater than 60 volts) electrical current. The ECE's draft amendments also allow for up to 10 milliamps of continuous electrical current or 100 ohms/volt of resistance. NHTSA has also examined the recent Japanese regulation TRIAS 11–1–4–101, ''Technical Standard for Protection of Occupants Against High Voltage in Fuel Cell Vehicles,'' which requires 100 ohms/volt electrical isolation between the chassis and the high-voltage system of those vehicles whose operating voltage is greater than 60 VDC.

Despite our interest in international harmonization, NHTSA does not believe that allowing 10 milliamps of continuous electrical current is sufficiently safe. Even for a duration of 2 seconds, 10 milliamps of AC electrical current could result in a reversible disturbance in the heart (such as atrial fibrillation and transient cardiac arrest without ventricular fibrillation).[16] Because of this, NHTSA is not proposing any changes to the existing isolation requirements for AC high voltage sources. Similarly, NHTSA does not believe that a change from the existing ECE requirement of 500 ohms/volt isolation to a requirement of 100 ohms/volt isolation, without distinguishing between AC and DC current, would be consistent with the best interests of safety. Additionally, neither the Alliance petition nor the revised SAE J1766 recommend any changes to the existing requirement of 500 ohms/volt isolation between AC high voltage sources and the chassis. Public comment is requested on the above values for electrical isolation and continuous current.

[16] IEC 479–1, Table 4—Time/current zones for a.c. 15 Hz to 100 Hz, p. 41.

IV. The Proposed Rule

A. Amending FMVSS No. 305 To Accommodate Fuel Cell Vehicles

This NPRM proposes to amend FMVSS No. 305 by revising certain sections in order to realign the standard with the April 2005 update of SAE J1766 that was changed to accommodate fuel cell vehicles and avoid hindering the development of that market. The following points highlight the key provisions of the proposed requirements:

- The NPRM would change the applicability of FMVSS No. 305 to accommodate state-of-the-art FCVs that use 60 VDC or 30 VAC or more for propulsion power instead of the existing 48 nominal volts.
- The NPRM would distinguish between isolation values for DC and AC currents, setting the value for DC high-voltage systems at 125 ohms/volt.
- The NPRM would accommodate current FCV technology by changing the test requirement in S5.3 from ''electrical isolation'' alone to ''electrical safety,'' which would also include an alternative requirement that the voltage between the high-voltage source and the vehicle chassis be less than 60 VDC or 30 VAC.
- The NPRM would add a definition for ''high-voltage source,'' and amend the definition for ''electrical isolation'' to reflect that isolation measurements shall be taken from any high-voltage source and the vehicle's chassis, instead of from only one location.
- The NPRM would harmonize S6.2 and S7.4 of FMVSS No. 305 with the revised FMVSS No. 301, as regards rear moving barrier impact test conditions.

B. Effective Date

NHTSA here proposes that the effective date of this rulemaking apply to vehicles manufactured one year after the final rule is published, with optional early compliance. The agency believes that one year should be sufficient for manufacturers to verify that they can meet the new electrical isolation requirements, particularly since similar requirements already exist as a SAE recommended practice. Currently, all manufacturers of electric-powered vehicles already isolate the high voltage sources from the vehicle chassis.

IV. Benefits/Costs

NHTSA anticipates no quantifiable economic or fatality-reduction benefits from this proposed rule. The update to FMVSS No. 305 represents an increase in the stringency of the level of safety provided by the standard for FCVs that are currently in development but not yet on the roads. Because the safety benefits will be in the future, they are not currently quantifiable. Immediate benefits that will likely accrue are primarily of a policy nature: That the hydrogen FCV market will not be hindered in its continuing development, as the petitioner asserted; that various small inconsistencies that have lingered in the standard will be corrected; and so forth.

NHTSA believes that the cost associated with this rulemaking would be negligible. Any added cost would consist only of what was involved in taking additional readings at different test points within vehicles that have both AC and DC power systems. Moreover, the vehicle manufacturers potentially affected by this proposed rule were involved in the update of SAE J1766 (which was revised to accommodate their current FCV designs), and are presumably already complying with that standard, so the additional cost of compliance with the proposed rule should be de minimis if not zero.

VI. Public Participation

How Do I Prepare and Submit Comments?

Your comments must be written and in English. To ensure that your comments are filed correctly in the Docket, please include the docket number of this document in your comments.

Your comments must not be more than 15 pages long (*see* 49 CFR 553.21). We established this limit to encourage you to write your primary comments in a concise fashion. However, you may attach necessary additional documents to your comments. There is no limit on the length of the attachments.

Please submit two copies of your comments, including the attachments, to Docket Management at the address given under **ADDRESSES**.

You may also submit your comments to the docket electronically by logging onto the Dockets Management System website at *http://dms.dot.gov*. Click on

''Help & Information,'' or ''Help/Info'' to obtain instructions for filing the document electronically.

How Can I Be Sure That My Comments Were Received?

If you wish Docket Management to notify you upon its receipt of your comments, enclose a self-addressed, stamped postcard in the envelope containing your comments. Upon receiving your comments, Docket Management will return the postcard by mail.

How Do I Submit Confidential Business Information?

If you wish to submit any information under a claim of confidentiality, you should submit three copies of your complete submission, including the information you claim to be confidential business information, to the Chief Counsel, NHTSA, at the address given above under **FOR FURTHER INFORMATION CONTACT**. In addition, you should submit two copies, from which you have deleted the claimed confidential business information, to Docket Management at the address given above under **ADDRESSES**. When you send a comment containing information claimed to be confidential business information, you should include a cover letter setting forth the information specified in our confidential business information regulation (49 CFR part 512).

Will The Agency Consider Late Comments?

We will consider all comments that Docket Management receives before the close of business on the comment closing date indicated above under **DATES**. To the extent possible, we also will consider comments that Docket Management receives after that date. If Docket Management receives a comment too late for us to consider it in developing the final rule, we will consider that comment as an informal suggestion for future rulemaking action.

How Can I Read The Comments Submitted By Other People?

You may read the comments received by Docket Management at the address given under **ADDRESSES**. The hours of the Docket are indicated above in the same location.

You also may see the comments on the Internet. To read the comments on the Internet, go to *http://www.regulations.gov*, and follow the instructions for accessing the Docket.

Please note that even after the comment closing date, we will continue to file relevant information in the Docket as it becomes available. Further, some people may submit late comments. Accordingly, we recommend that you periodically check the Docket for new material.

VII. Rulemaking Analyses and Notices

A. Executive Order 12866 and DOT Regulatory Policies and Procedures

This rulemaking document was not reviewed by the Office of Management and Budget under E.O. 12866. It is not considered to be significant under E.O. 12866 or the Department's Regulatory Policies and Procedures (44 FR 11034; Feb. 26, 1979). This proposed rule should have no significant effect on the national economy, and simply clarifies for FCV manufacturers their obligations under FMVSS No. 305.

B. Regulatory Flexibility Act

Pursuant to the Regulatory Flexibility Act (5 U.S.C. 601 et seq., as amended by the Small Business Regulatory Enforcement Fairness Act (SBREFA) of 1996), whenever an agency is required to publish a notice of rulemaking for any proposed or final rule, it must prepare and make available for public comment a regulatory flexibility analysis that describes the effect of the rule on small entities (i.e., small businesses, small organizations, and small governmental jurisdictions). The Small Business Administration's regulations at 13 CFR part 121 define a small business, in part, as a business entity ''which operates primarily within the United States.'' (13 CFR 121.105(a)). No regulatory flexibility analysis is required if the head of an agency certifies the rule will not have a significant economic impact on a substantial number of small entities. SBREFA amended the Regulatory Flexibility Act to require Federal agencies to provide a statement of the factual basis for certifying that a rule will not have a significant economic impact on a substantial number of small entities.

NHTSA has considered the effects of this proposed rule under the Regulatory Flexibility Act. I certify that this proposed rule would not have a significant economic impact on a substantial number of small entities. Any small manufacturers that might be affected by this proposed rule are already subject to the requirements of FMVSS No. 305, and the testing costs added by this proposed rule are anticipated to be extremely small. Therefore, there should be only a very minor economic impact, if any.

C. Executive Order 13132 (Federalism)

NHTSA has examined today's final rule pursuant to Executive Order 13132 (64 FR 43255, August 10, 1999) and concluded that no additional consultation with States, local governments or their representatives is mandated beyond the rulemaking process. The agency has concluded that the rule does not have federalism implications because the rule does not have ''substantial direct effects on the States, on the relationship between the national government and the States, or on the distribution of power and responsibilities among the various levels of government.''

Further, no consultation is needed to discuss the preemptive effect of today's rule. NHTSA rules can have preemptive effect in at least two ways. First, the National Traffic and Motor Vehicle Safety Act contains an express preemptive provision: ''When a motor vehicle safety standard is in effect under this chapter, a State or a political subdivision of a State may prescribe or continue in effect a standard applicable to the same aspect of performance of a motor vehicle or motor vehicle equipment only if the standard is identical to the standard prescribed under this chapter.'' 49 U.S.C. 30103(b)(1). It is this statutory command that preempts State law, not today's rulemaking, so consultation would be inappropriate.

In addition to the express preemption noted above, the Supreme Court has also recognized that State requirements imposed on motor vehicle manufacturers, including sanctions imposed by State tort law, can stand as an obstacle to the accomplishment and execution of a NHTSA safety standard. When such a conflict is discerned, the Supremacy Clause of the Constitution makes their State requirements unenforceable. *See Geier* v. *American Honda Motor Co.*, 529 U.S. 861 (2000). NHTSA has not outlined such potential State requirements in today's rulemaking, however, in part because such conflicts can arise in varied contexts, but it is conceivable that such a conflict may become clear through subsequent experience with today's standard and test regime. NHTSA may opine on such conflicts in the future, if warranted. *See id.* at 883–86.

D. National Environmental Policy Act

NHTSA has analyzed this rulemaking action for the purposes of the National Environmental Policy Act. The agency has determined that implementation of this action will not have any significant

impact on the quality of the human environment.

E. Executive Order 12988 (Civil Justice Reform)

With respect to the review of the promulgation of a new regulation, section 3(b) of Executive Order 12988, ''Civil Justice Reform'' (61 FR 4729, February 7, 1996) requires that Executive agencies make every reasonable effort to ensure that the regulation: (1) Clearly specifies the preemptive effect; (2) clearly specifies the effect on existing Federal law or regulation; (3) provides a clear legal standard for affected conduct, while promoting simplification and burden reduction; (4) clearly specifies the retroactive effect, if any; (5) adequately defines key terms; and (7) addresses other important issues affecting clarity and general draftsmanship under any guidelines issued by the Attorney General. This document is consistent with that requirement.

Pursuant to this Order, NHTSA notes as follows. The preemptive effect of this rule is discussed above. NHTSA notes further that there is no requirement that individuals submit a petition for reconsideration or pursue other administrative proceeding before they may file suit in court.

F. Privacy Act

Please note that anyone is able to search the electronic form of all comments received into any of our dockets by the name of the individual submitting the comment (or signing the comment, if submitted on behalf of an association, business, labor union, etc.). You may review DOT's complete Privacy Act Statement in the **Federal Register** published on April 11, 2000 (Volume 65, Number 70; Pages 19477–78), or you may visit *http://DocketInfo.dot.gov.*

G. Paperwork Reduction Act

Under the Paperwork Reduction Act of 1995 (PRA), a person is not required to respond to a collection of information by a Federal agency unless the collection displays a valid OMB control number. There are no information collection requirements associated with this NPRM, nor would there be information collection requirements if this proposed rule were to be made final.

H. National Technology Transfer and Advancement Act

Section 12(d) of the National Technology Transfer and Advancement Act of 1995 (NTTAA), Public Law 104–113 (15 U.S.C. 272) directs the agency to evaluate and use voluntary consensus standards in its regulatory activities unless doing so would be inconsistent with applicable law or is otherwise impractical. Voluntary consensus standards are technical standards (*e.g.*, materials specifications, test methods, sampling procedures, and business practices) that are developed or adopted by voluntary consensus standards bodies, such as the Society of Automotive Engineers (SAE). The NTTAA directs us to provide Congress (through OMB) with explanations when the agency decides not to use available and applicable voluntary consensus standards. The NTTAA does not apply to symbols.

FMVSS No. 305 has historically drawn largely from SAE J1766, and does so again for this current rulemaking, which updates FMVSS No. 305 based on a recent updating of SAE J1766. NHTSA is not, however, adopting SAE J1766 verbatim, for the reasons discussed in Section C(1) above, and is proposing an isolation level of 125 ohms/volt instead of 100 ohms/volt for DC current. The agency believes that this will best avoid reducing the safety benefits of FMVSS No. 305 as it is currently written.

NHTSA requests public comment on the appropriateness of also considering the 2006 International Organization for Standardization (ISO) standard ISO 23273–3, ''Fuel cell road vehicles—Safety specifications—Part 3: Protection of persons against electric shock.''

List of Subjects in 49 CFR Part 565

Imports, Motor vehicles, Motor vehicle safety, and Tires.

In consideration of the foregoing, NHTSA proposes to amend 49 CFR Part 571.305 as follows:

PART 571—FEDERAL MOTOR VEHICLE SAFETY STANDARDS

1. The authority citation for part 571 continues to read as follows:

Authority: 49 U.S.C. 322, 30111, 30115, 30117, and 30166; delegation of authority at 49 CFR 1.50.

2. Amend § 571.305 by revising S1, S2, S3, S4, S5.2, S5.3, S6.2, S7, S7.1, S7.2, S7.4, S7.6, S7.6.1, S7.6.2, S7.6.3, S7.6.4, S7.6.5, S7.6.6, and S7.6.7 to read as follows:

§ 571.305 Standard No. 305; Electric-powered vehicles: Electrolyte spillage and electrical shock protection.

S1 *Scope.* This standard specifies requirements for limitation of electrolyte spillage, retention of energy storage devices, and protection from harmful electric shock during and after a crash.

S2 *Purpose.* The purpose of this standard is to reduce deaths and injuries during a crash which occur because of electrolyte spillage from energy storage devices, intrusion of energy storage device system components into the occupant compartment, and electrical shock.

S3 *Application.* This standard applies to passenger cars, and to multipurpose passenger vehicles, trucks and buses with a GVWR of 4536 kg or less, that use more than 60 volts direct current (VDC) or 30 volts alternating current (VAC) of electricity as propulsion power and whose speed attainable over a distance of 1.6 km on a paved level surface is more than 40 km/h.

S4 *Definitions.*

Dummy means a 50th percentile male test dummy as specified in subpart F of part 572 of this chapter.

Electrical isolation means the electrical resistance between the vehicle high-voltage source and any vehicle conductive structure.

Energy storage system means the components comprising, but not limited to, the vehicle's high-voltage battery system or capacitor system. These include, but are not limited to, the battery or capacitor modules, interconnects, venting systems, battery or capacitor restraint devices, and energy storage boxes or containers that hold the individual battery or capacitor modules.

High-voltage source means any item that produces voltage levels equal to or greater than 30 VAC or 60 VDC.

VAC means volts of alternating current (AC).

VDC means volts of direct current (DC).

* * * * *

S5.2 *Energy storage device retention.* Energy storage system modules located inside the passenger compartment must remain in the location in which they are installed. Any energy storage system component that is located outside the passenger compartment must not enter the passenger compartment during the test procedures of S6 of this standard, as determined by visual inspection.

S5.3 *Electrical safety.* After each test, electrical isolation and energy between any high-voltage source and the vehicle chassis electricity-conducting structure must meet the following:

(a) For AC high-voltage systems, electrical isolation is not less than 500 ohms/volt; or

(b) For DC high-voltage systems, electrical isolation is not less than 125 ohms/volt.

* * * * *

S6.2 *Rear moving barrier impact.* The vehicle must meet the requirements of S5.1, S5.2, and S5.3 when it is impacted from the rear by a barrier that conforms to S7.3(b) of Sec. 571.301 of this chapter and that is moving at any speed up to and including 80 km/h (50 mph) with dummies positioned in accordance with S6.2 of Sec. 571.301 of this chapter.

* * * * *

S7 *Test conditions.* When the vehicle is tested according to S6, the requirements of S5 must be determined by the conditions specified in S7.1 through S7.6.7. All measurements for calculating electrical isolation or the amount of electrical energy will be made after a minimum of 5 seconds immediately after the tests specified in S6. Where a range is specified, the vehicle must be capable of meeting the requirements at all points within the range.

S7.1 *Energy storage device state of charge.* The energy storage device is at the level specified in the following paragraphs (a), (b), or (c), as appropriate:

(a) At the maximum state of charge recommended by the manufacturer, as stated in the vehicle operator's manual or on a label that is permanently affixed to the vehicle;

(b) If the manufacturer has made no recommendation, at a state of charge of not less than 95 percent of the maximum capacity of the energy storage device; or

(c) If the energy storage device(s) are rechargeable only by an energy source on the vehicle, at any state of charge within the normal operating voltage, as defined by the vehicle manufacturer.

S7.2 *Vehicle conditions.* The switch or device that provides power from the high-voltage system to the propulsion motor(s) is in the activated position or the ready-to-drive position.

* * * * *

S7.4 *Rear moving barrier impact test conditions.* In addition to the conditions of S7.1 and S7.2, the conditions of S7.5 and S7.6 of Sec. 571.301 of this chapter apply to the conducting of the rear moving deformable barrier impact test specified in S6.2.

* * * * *

S7.6 *Electrical isolation test procedure.* In addition to the conditions of S7.1 and S7.2, the conditions in S7.6.1 through S7.6.7 apply to the measuring of electrical isolation specified in S5.3.

S7.6.1 Prior to any barrier impact test, the high-voltage system is connected to the vehicle's propulsion system, and the vehicle ignition is in the ''on'' (traction (propulsion) system energized) position. If the vehicle utilizes an automatic disconnect between the high-voltage system and the traction system that is physically contained within the high-voltage system, the electrical isolation measurement after the test is made from the traction system side of the automatic disconnect to the vehicle chassis. If the vehicle utilizes an automatic disconnect that is not physically contained within the high-voltage system, the electrical isolation measurement after the impact is made from the high-voltage source side of the automatic disconnect to the vehicle chassis.

S7.6.2 The voltmeter used in this test has an internal resistance of at least 10 MΩ.

S7.6.3 The voltage(s) is/are measured as shown in Figure 1 and the high-voltage source voltage(s) (Vb) is/are recorded. Before any vehicle impact test, Vb is equal to or greater than the nominal operating voltage as specified by the vehicle manufacturer.

S7.6.4 The voltage(s) is/are measured as shown in Figure 2, and the voltage(s) (V1) between the negative side of the high-voltage source and the vehicle chassis is/are recorded.

S7.6.5 The voltage(s) is/are measured as shown in Figure 3, and the voltage(s) (V2) between the positive side of the high-voltage source and the vehicle chassis is/are recorded.

S7.6.6 If V1 is greater than or equal to V2, insert a known resistance (Ro) between the negative side of the high-voltage source and the vehicle chassis. With the Ro installed, measure the voltage (V1') as shown in Figure 4 between the negative side of the high-voltage source and the vehicle chassis. Calculate the electrical isolation (Ri) according to the formula shown.

S7.6.7 If V2 is greater than V1, insert a known resistance (Ro) between the positive side of the high-voltage source and the vehicle chassis. With the Ro installed, measure the voltage and record the voltage (V2') between the positive side of the high-voltage source and the vehicle chassis as shown in Figure 5. Calculate the electrical isolation (Ri) according to the formula shown.

* * * * *

3. Further amend § 571.305 by revising Figures 1, 2, 3, 4, and 5 following S7.6.7 to read as follows:

BILLING CODE 4910–59–C

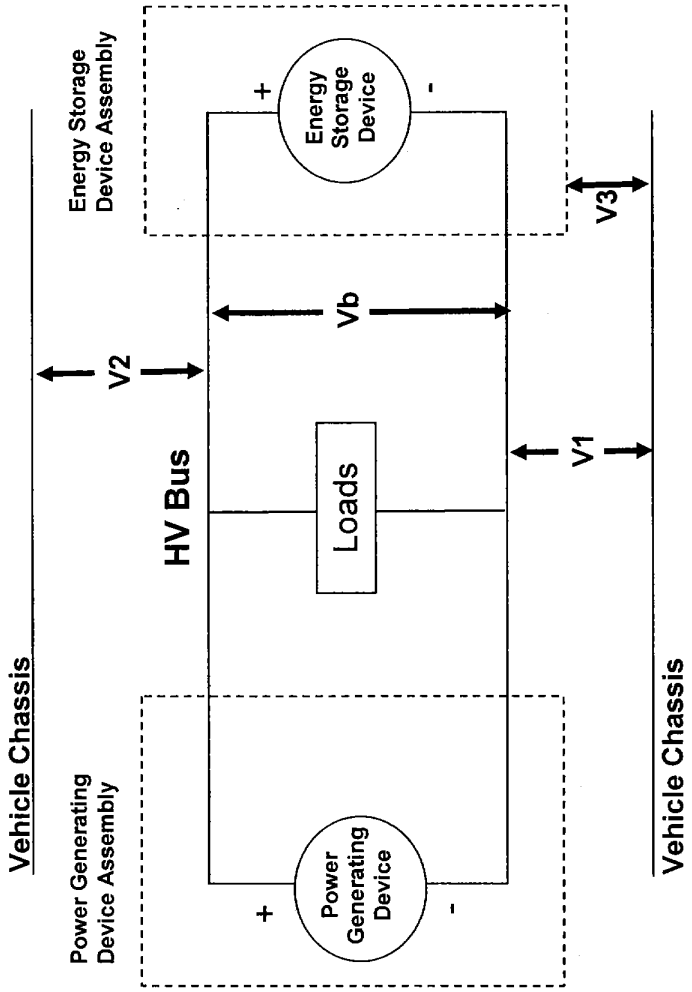

Figure 1. S7.6.6 Measurement of High Voltage Source for Vb Voltage

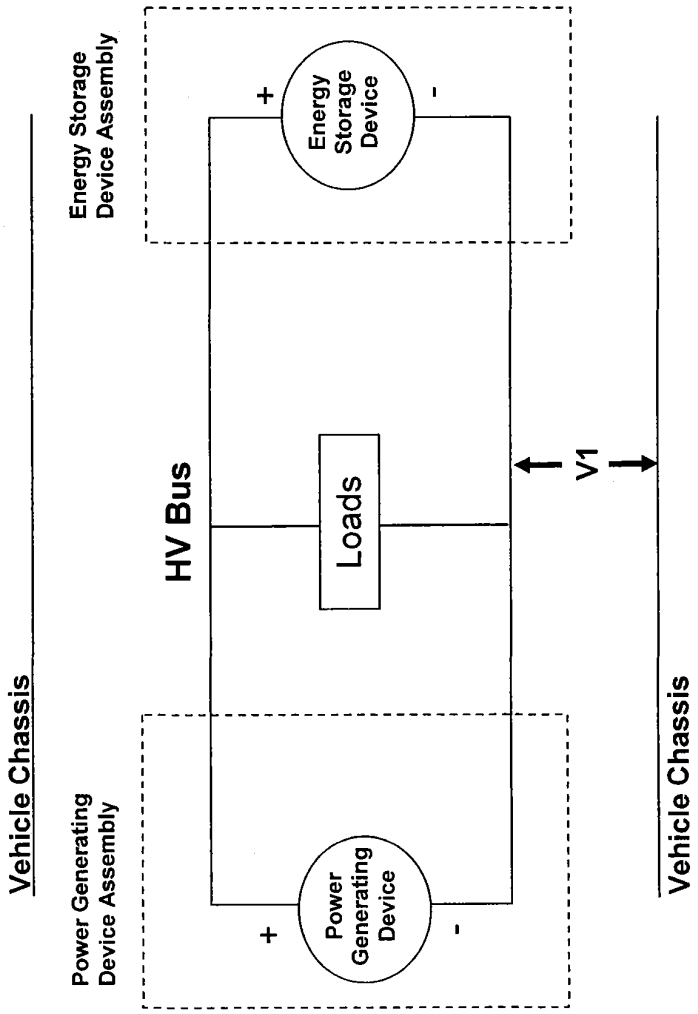

Figure 2. S7.6.4 Measurement for V1 Voltage between the Negative Side of the High Voltage Source and the Vehicle Chassis

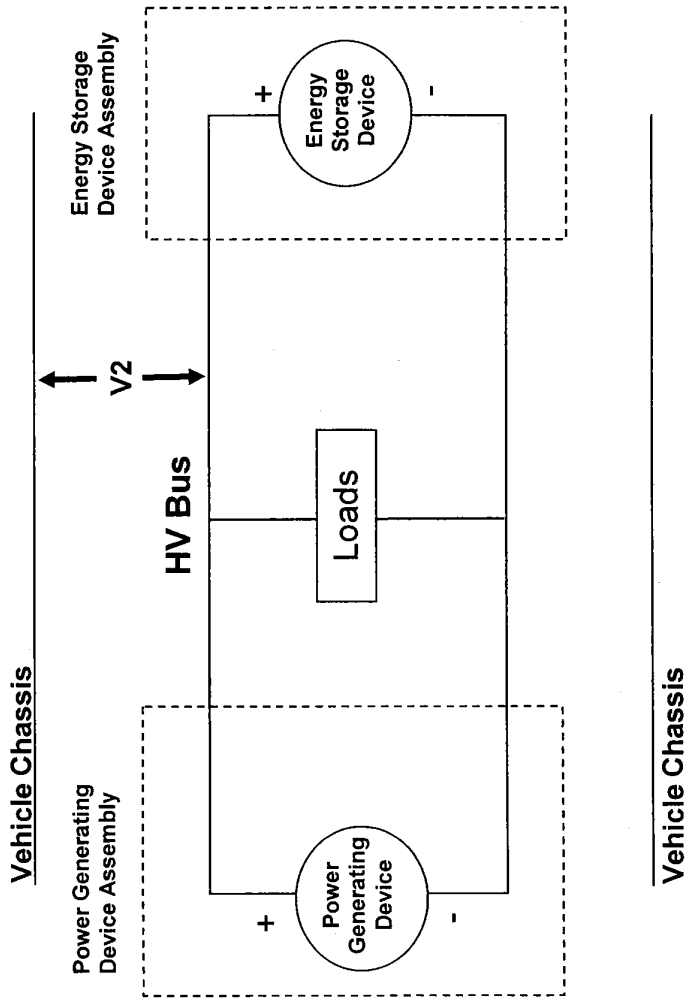

Figure 3. S7.6.5 Measurement for V2 Voltage between the Positive Side of the High Voltage Source and the Vehicle Chassis

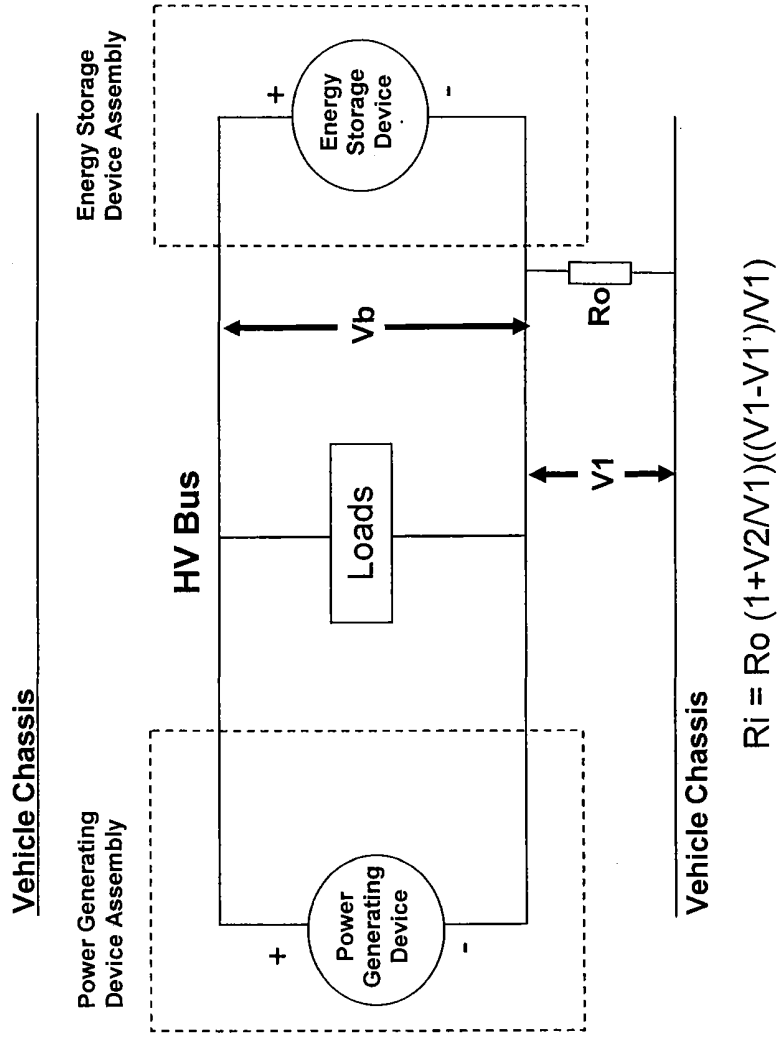

Figure 4. S7.6.6 Measurement for V1' Voltage across Resistor between Negative Side of the High Voltage Source and Vehicle Chassis

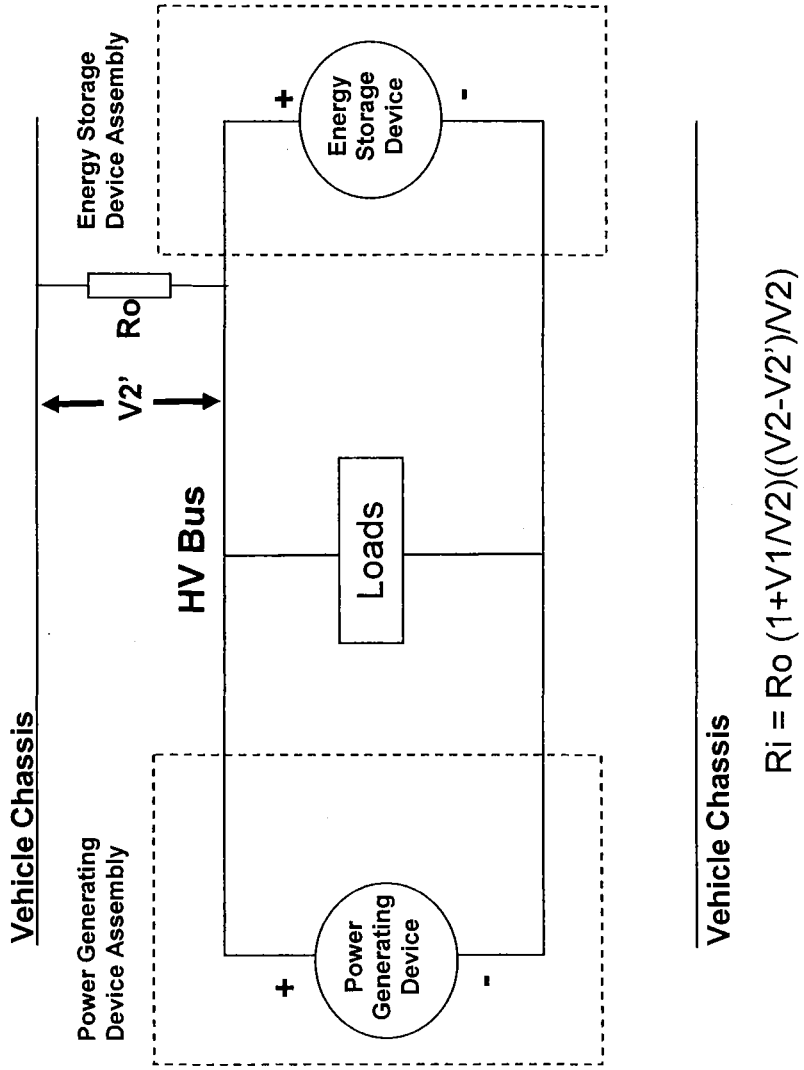

gure 5. S7.6.7 Measurement for V2' Voltage across Resistor between Positive Side of the High Voltage Source and Vehicle Chassis

Issued: October 2, 2007.

Stephen R. Kratzke,

Associate Administrator for Rulemaking.

[FR Doc. E7–19735 Filed 10–5–07; 8:45 am]

BILLING CODE 4910–59–P

DEPARTMENT OF THE INTERIOR

Fish and Wildlife Service

50 CFR Part 17

Endangered and Threatened Wildlife and Plants; 90-Day Finding on a Petition To List the Giant Palouse Earthworm as Threatened or Endangered

AGENCY: Fish and Wildlife Service, Interior.

ACTION: Notice of 90-day petition finding.

SUMMARY: We, the U.S. Fish and Wildlife Service (Service), announce a 90-day finding on a petition to list the giant Palouse earthworm (*Driloleirus americanus*) as threatened or endangered under the Endangered Species Act of 1973, as amended. We find that the petition does not provide substantial scientific or commercial information to indicate that listing the giant Palouse earthworm may be warranted. Therefore, we will not be initiating a status review in response to this petition. However, we encourage the public to submit to us any new information that becomes available concerning this species.

DATES: The finding announced in this document was made on October 9, 2007.

ADDRESSES: Data and new information concerning the giant Palouse earthworm may be submitted to the Supervisor, Upper Columbia Fish and Wildlife Office, U.S. Fish and Wildlife Service, 11103 East Montgomery Drive, Spokane, WA 99206. The petition, administrative finding, supporting data, and comments received will be available for public inspection, by appointment, during normal business hours at the above address.

FOR FURTHER INFORMATION CONTACT: Susan Martin, Field Supervisor, at the above address, by phone at (509) 891–6838, or facsimile at (509) 891–6748. Please include ''giant Palouse earthworm scientific information'' in the subject line for faxes. If you use a telecommunications device for the deaf (TDD), call the Federal Information Relay Service (FIRS) at 800–877–8339.

SUPPLEMENTARY INFORMATION:

Background

Section 4(b)(3)(A) of the Endangered Species Act of 1973, as amended (16 U.S.C. 1531 et seq.) (Act), requires that we make a finding on whether a petition to list, delist, or reclassify a species, presents substantial scientific or commercial information to indicate that the petitioned action may be warranted. To the maximum extent practicable, we are to make the finding within 90 days of our receipt of the petition, and publish a notice of the finding promptly in the **Federal Register**.

This finding summarizes the information included in the petition and information available to us at the time of the petition review. Under section 4(b)(3)(A) of the Act and our regulations in 50 CFR 424.14(b), our review of a 90-day finding is limited to a determination of whether the information in the petition meets the ''substantial information'' threshold. Our standard for substantial information within the Code of Federal Regulations (CFR) with regard to a 90-day petition finding is ''that amount of information that would lead a reasonable person to believe that the measure proposed in the petition may be warranted'' (50 CFR 424.14(b)). If we find that substantial information was presented, we are required to promptly commence a review of the status of the species.

We have to satisfy the Act's requirements that we use the best available science to make our decisions. However, we do not conduct additional research at this point, nor do we subject the petition to rigorous critical review. Rather, at the 90-day finding stage, we accept the petitioners' sources and characterizations of the information, to the extent that they appear based on accepted scientific principles (such as citing published and peer-reviewed articles, or studies done in accordance with valid methodologies), unless we have specific information to the contrary. Our finding considers whether the petition states a reasonable case that listing may be warranted based on the information presented. Thus, our 90-day finding expresses no view as to the ultimate issue of whether the species should be listed.

On August 30, 2006, we received a petition, dated August 18, 2006, from a private citizen and five other concerned parties requesting that we emergency list the giant Palouse earthworm (*Driloleirus americanus*) as threatened or endangered, and that critical habitat be designated concurrently with the listing. The other five concerned parties include the Palouse Prairie Foundation, the Palouse Audubon Society, Friends of the Clearwater, and two other private citizens (hereafter referred to as the petitioners). The petition clearly identified itself as a petition and included the requisite identification information for the petitioners, as required in 50 CFR 424.14(a). The petition contained information on the natural history of the giant Palouse earthworm and potential threats to the species. Potential threats discussed in the petition include destruction and modification of habitat, disease and predation, inadequacy of regulatory mechanisms, and other natural and manmade factors, such as invasive and noxious weeds and road-building activities.

On October 2, 2006, we notified the petitioners that our initial review of the petition for the giant Palouse earthworm concluded that an emergency listing was not warranted, and that, due to court orders and judicially approved settlement agreements for other listing actions, we would not be able to further address the petition to list the giant Palouse earthworm at that time. This finding addresses the petition.

Species Information

The giant Palouse earthworm was first described by Frank Smith in 1897 after he discovered it near Pullman, Washington: ''* * * this species is very abundant in that region of the country and their burrows are sometimes seen extending to a depth of over 15 feet.'' Although only a few specimens have been collected, early descriptions and collection locations indicated that the giant Palouse earthworm can be as long a 3 feet (0.9 meters) and is considered by some an endemic that utilizes grassland sites with good soil and native vegetation of the Palouse bioregion (James 1995, p. 1; Niwa *et al.* 2001, p. 34). It has been described as an Anecic earthworm, one of three basic earthworm types, based on its functional role in the soil ecosystem. Anecic earthworms are the largest and longest lived (James 2000, pp. 8–10, 1995, p. 6). Anecic earthworms uniquely contribute to the soil ecosystem by transporting fresh plant material from the soil surface to subterranean levels. The deep burrows also aid in water infiltration (James 2000, p. 9; Edwards 2004, pp. 30–31).

Population Status

The petition stated that since the initial description of the giant Palouse earthworm, sightings have been extremely infrequent. In 2005, a University of Idaho graduate student conducting soil samples was the first person in nearly two decades to report

a sighting of this earthworm (University of Idaho 2006, p. 1). Prior to this sighting, two specimens were collected in 1988 by University of Idaho researchers studying pill beetles in a forest clearing. A specimen was also collected by Fender in 1978 (Fender 1985, pp. 93–132). An indication of the species' rarity is documented by Fauci and Bezdicek (2002, pp. 257–260); they surveyed earthworms at 46 sites in the Palouse bioregion without one collection of the giant Palouse earthworm.

As of 1990, three distinct collection sites had been identified: Near Moscow, Idaho; near Pullman, Washington; and in the hills west of Ellensburg, Washington (Fender and McKey-Fender 1990, p. 358). It should be noted that the collection site west of Ellensburg is outside of the Palouse bioregion, which casts some doubt on whether the giant Palouse earthworm is endemic only to that area. Ellensburg is located 27 miles (43.5 kilometers) west of the Columbia River, which is the western most extent of the Palouse bioregion.

The petition also states that due to the temperate climate in the Palouse bioregion, earthworms are mainly active in autumn and spring. Additionally, according to Fender (1995, p. 58), giant Palouse earthworms generally form permanent burrows at least 14.7 feet (4.5 meters) deep and can move very rapidly to escape a shovel. This may account for the fact that, in the presence of very limited formal studies of native earthworms in the bioregion, there have been only a few recorded sightings of the giant Palouse earthworm in the past 107 years.

Threats Analysis

Section 4 of the Act and implementing regulations (50 CFR part 424), set forth procedures for adding species to the Federal Lists of Endangered and Threatened species. Under section 4(a)(1) of the Act, we may list a species on the basis of any of five factors, as follows: (A) The present or threatened destruction, modification, or curtailment of its habitat or range; (B) overutilization for commercial, recreational, scientific, or educational purposes; (C) disease or predation; (D) the inadequacy of existing regulatory mechanisms; or (E) other natural or manmade factors affecting its continued existence. In making this 90-day finding, we evaluated the petition and its supporting information to determine whether substantial scientific or commercial information was presented to indicate that listing the giant Palouse earthworm may be warranted. Our evaluation of these threats, based on information provided in the petition and readily available in our files, is presented below.

A. Present or Threatened Destruction, Modification, or Curtailment of the Species Habitat or Range

Agriculture

The petition states that the giant Palouse earthworm is threatened by the extensive conversion of native Palouse prairie grassland habitat to non-native annual crop production. The petition states that, based on historic accounts and very few documented observations of the earthworm, it is endemic to this habitat. According to the petition, the giant Palouse earthworm is particularly vulnerable to habitat loss due to its narrow geographic range. During the past 125 years, the Palouse prairie has experienced dramatic conversion of native vegetation and habitat, primarily due to agricultural development.

In general, earthworms are influenced by four environmental factors: Moisture, temperature, soil pH, and food resource quality and quantity (James 1995, p. 5; 2000, p. 1). It has been stated that ''agricultural practices replace earthworm functional roles with mechanical and chemical inputs, and tend to reduce earthworm populations'' (James 1995, p. 12). According to the petition, it is believed that the giant Palouse earthworm is likely less tolerant of disturbances due to agriculture than its native and non-native earthworm counterparts within the bioregion. Because temperature and moisture patterns tend to be more extreme for grassland habitat types than, for example, forested or shrub land habitat types, it is possible that earthworms that are limited to grassland habitat types are more vulnerable to site-specific degradation (James 2000, pp. 1–2). Agricultural practices that create long periods of bare soil can intensify the effect of weather on earthworms, such as during flooding and drought conditions (James 2000, p. 2).

The petition states that soil compaction occurs from the use of agricultural machinery, development, and grazing. Soil compaction affects the soil food web, soil composition, and functional groups that live within the soil ecosystem (Niwa *et al.* 2001, p. 13). Soil pore size is reduced (Niwa 2001, p. 13); favoring exotic earthworms species that are more tolerant of course soils than native species (Fender and McKey-Fender 1990, pp. 363–364; Edwards *et al.* 1995, pp. 200–201). According to James (2000, p. 6) and others, soil pH is often a limiting factor on earthworm distribution; this conclusion is based on studies of the best-known European varieties. The petition states that the high application rates of ammonium-based nitrogen fertilizer over the past 40 years in the Palouse bioregion have increased soil pH and reduced soil productivity. According to Edwards *et al.* (1995, p. 202) earthworms are very sensitive to ammonia-based fertilizers. Similarly, studies have shown that earthworms are susceptible to mortality from chemical exposure, including pesticides. Earthworms are particularly vulnerable to herbicides that change or destroy the vegetation upon which they depend. According to Edwards and Bohlen (1996, p. 283), the toxicities of different chemicals and pesticides on earthworms vary greatly.

The petition did not provide any information that indicated the types and amounts of pesticides and herbicides that have been applied to farmed lands within the Palouse bioregion. It also provided little information indicating the amounts of ammonia-based fertilizer that was applied to farmlands in the bioregion.

Little information is available regarding the population status or extent of the giant Palouse earthworm. Although the Palouse prairie grassland habitat has been extensively impacted by agriculture, very limited information exists on the specific habitat limitations of the giant Palouse earthworm or on impacts to it from agricultural activities. Most of the information presented in the petition is related to other native and exotic earthworm species, and therefore it is difficult to draw specific conclusions related to whether any of the potential threats raised in the petition affect the giant Palouse earthworm.

Suburban Human Development

The petition states that the Palouse region is currently undergoing a surge in high-density housing construction and its associated infrastructure. In addition to the footprint of suburban housing development and apartment complexes with associated parking lots, access roads fragment existing habitat for this species. County roads are being upgraded and widened to handle the increase in motorized traffic. The petition states that maintaining these vehicular by-ways, specifically runoff pollution from them, is often toxic to humans, animals, insects and invertebrates. The petition states that the giant Palouse earthworm is particularly vulnerable to habitat loss due to its narrow geographic range (James 2000, p. 8).

Summary of Factor A

We found that a large percent of the Palouse prairie grassland has been converted to agriculture. However, one of the rare sightings of the species occurred outside the Palouse prairie (in the hills west of Ellensburg, Washington), and therefore it is unclear if the species is endemic only to that area. Because the extent of the giant Palouse earthworm historic range is unknown, we are unable to assess habitat loss or the species' reduction in range. We have no data to confirm that the species is endemic to the Palouse bioregion. The species may be affected by agricultural practices that utilize chemicals and result in soil compaction and composition, but we have no data that verify or quantify these threats to the species.

We found very little data, in the petition or in our files, directly related to the giant Palouse earthworm indicating the extent of any impact to the population across its range, or verifying the range of the species. Overall, the petitioners' claim is not supported by the information available. Therefore, we find that the petition does not present substantial scientific or commercial information that present or threatened destruction, modification, or curtailment of the species' habitat or range may be a factor threatening the continued existence of the giant Palouse earthworm.

B. Over Utilization for Commercial, Recreational, Scientific, or Educational Purposes

The petition states that three of the last few reported individuals of this species have been inadvertently killed during research activities focused on reporting the rarity of its existence.

Summary of Factor B

We could find no reliable population size or trend data for the giant Palouse earthworm in the petition or in our files that would enable us to determine whether the loss of four documented collections of the earthworm since 1978 may be a threat to the species' existence. Based on our review, the petitioners' claim is not supported by the information available. Therefore, we find that the petition does not present substantial scientific or commercial information to document that over utilization for commercial, recreational, scientific, or educational purposes may be a factor threatening the continued existence of the giant Palouse earthworm.

C. Disease or Predation

The petition states that the removal of native plants and the agricultural practice of leaving cropland bare for long periods of time create an environment where native species, such as the giant Palouse earthworm, are susceptible to predation by birds (James 1995, p. 11). The petition states that pathogens are known to have been transmitted to native earthworms by exotic earthworms, either as passive carriers or as intermediate hosts (Hendrix and Bohlen 2002, p. 802).

Summary of Factor C

We could locate no information specific to predation of the giant Palouse earthworm or to transmission of pathogens by exotic earthworms, in the petition or our files. There was also no population data provided that could be used to determine the extent of any threats to this earthworm by predation. Therefore, we find that the petition does not present substantial scientific or commercial information to document that disease or predation may be a factor threatening the continued existence of the giant Palouse earthworm.

D. Inadequacy of Existing Regulatory Mechanisms

The petition states that there are no Federal, state, or local regulations that specifically protect the giant Palouse earthworm or its habitat. The petition indicates that the Palouse Subbasin Management Plan, developed as part of the Northwest Power and Conservation Council review process for the subbasins in the Columbia River Basin, contains three objectives (7, 8, and 15) that are relevant to the giant Palouse earthworm and its habitat. Objective 7 is designed to protect native grassland habitat within the Palouse subbasin, however there is no indication that this objective would be regulatory rather than voluntary in nature, and it does not provide specific protection for the giant Palouse earthworm. Objective 8 is designed to restore lost or degraded grassland habitat within the Palouse subbasin by identifying feasible opportunities for restoration. This objective does not define ''feasible opportunities,'' and appears to rely on a voluntary approach, which provides no regulatory protection for the giant Palouse earthworm. Objective 15 is designed to increase wildlife habitat value on agricultural land for focal species; however, it too is voluntary in nature and does not provide specific protection for the giant Palouse earthworm or its habitat.

The petition states that the Interior Columbia Basin Ecosystem Management Project (ICBEMP) was initiated to develop an ecosystem-based management strategy for managing Federal lands of the Interior Columbia River Basin. Earthworms in particular are not mentioned in the Environmental Impact Statement or proposed decision (ICBEMP 2003). The ICBEMP report does state that, ''An overview of the Palouse subbasin wouldn't be complete unless the giant Palouse earthworm was mentioned'' (ICBEMP 2003, p.131). However, neither the giant Palouse earthworm nor any other native earthworm species is listed as a priority species in Washington, even though grassland is considered a priority habitat in this bioregion by the Washington Department of Fish and Wildlife.

According to the petition, the regulation of earthworms imported into the United States is based on the Federal Plant Pest Act (7 U.S.C. 150aa–150jj, May 23, 1957, as amended 1968, 1981, 1983, 1988 and 1994), under which the Animal and Plant Health Inspection Service controls imports containing soil that might carry pathogens. The petition cited Hendrix and Bohlen (2002, p. 809), who observed that, ''In the absence of pathogens, it appears that any earthworm species may be imported, that is, there is no specific consideration of earthworms as invasive organisms.'' According to the petition, regulation has not been effective in reducing the importation of exotic earthworm species to the United States from other parts of the world, and the petitioners believe that this poses a direct threat to the existence of the giant Palouse earthworm and other native earthworm species in the United States.

Summary of Factor D

We found the petition to be correct in that there are no existing regulatory mechanisms for the giant Palouse earthworm or for other native earthworms. However, we could not determine the existence of any threats the earthworm may face, now or in the foreseeable future, due to this lack of regulation. So little information exists, about the population size, trends, habitat needs, and limiting factors of the giant Palouse earthworm, we could not determine if lack of regulations may pose a threat to the species. Therefore, we find that the petition does not present substantial scientific or commercial information to document that lack of regulatory mechanisms may be a factor threatening the continued

existence of the giant Palouse earthworm.

E. Other Natural or Manmade Factors Affecting Its Existence

The petition states that, in general, native earthworms are vulnerable to habitat disturbance and invasion by exotic species (James 1995, p. 5). According to the petition, invasion of exotic species is a twofold threat to the giant Palouse earthworm. First, exotic plants and animals degrade native Palouse grassland habitat by reducing the beneficial functions native species provide and by performing different functions themselves. Second, native earthworm species are displaced by exotic earthworm species better able to adapt to a degraded habitat. The petition describes non-native plants intentionally and accidentally introduced into the Palouse bioregion, including *Poa pratensis* (Kentucky bluegrass), *Bromus tectorum* (cheatgrass), and *Centaurea solstitialis* (yellow starthistle).

Summary of Factor E

While data exists on non-native plants within the Palouse bioregion, we could find no data provided by the petitioners or in our files, that specifically documented potential threats the giant Palouse earthworm may face from exotic species. We could not determine whether exotic species of earthworms may be a threat to the giant Palouse earthworm, because we found no information on numbers or locations of exotic earthworms provided by the petitioners or in our files. Therefore, we find that the petition does not present substantial scientific or commercial information to document that other natural or manmade factors may be a factor threatening the continued existence of the giant Palouse earthworm.

Finding

We assessed the information in the petition and in our files, and found no substantial information indicating that listing the giant Palouse earthworm may be warranted. While we share the petitioners' concern for the species, we could not determine whether any of the potential threats discussed in the petition may pose a risk, now or in the foreseeable future, to the continued existence of the species.

We found little data provided by the petitioner or in our files to determine the extent of the historic or current range and distribution of the giant Palouse earthworm. At least one collection site is outside of the Palouse bioregion (Fender and McKey-Fender 1990, p. 358), suggesting that the species may not be endemic to the specific bioregion. We agree with the petitioners that the Palouse prairie has experienced a dramatic conversion of native habitat to agricultural practices; however, information linking the effect this may have had on the earthworm is currently nonexistent.

Information regarding the range, distribution, population size, and status of the giant Palouse earthworm is very limited, which curtails any assessment of population trends. This limits our ability to assess whether the species may be impacted by the threats listed in the petition.

We evaluated the petition and the literature cited, and information available in our files. Based on our current understanding of the species' distribution and population numbers, our analysis, and a review of factors affecting the species as presented in the petition, we find that the petition does not present substantial information demonstrating that listing the giant Palouse earthworm as threatened or endangered may be warranted at this time.

While we will not be initiating a status review in response to the petition, we will continue to cooperate with others to monitor the species' status, trends, and life history needs, and we encourage interested parties to continue to provide us with information that will assist with the conservation of the species. Information on the species range and distribution, and other information relevant to the species status and potential threats would be particularly helpful. Interested parties may submit information regarding the giant Palouse earthworm to the Field Supervisor, Upper Columbia Fish and Wildlife Office (see **ADDRESSES** above).

References Cited

A complete list of all references cited is available on request from the Upper Columbia Fish and Wildlife Office (see **ADDRESSES** above).

Author

The primary authors of this document are staff at the Upper Columbia Fish and Wildlife Office (see **ADDRESSES** above).

Authority

The authority for this action is the Endangered Species Act of 1973, as amended (16 U.S.C. 1531 *et seq.*).

Dated: September 27, 2007.

Kenneth Stansell,

Acting Director, Fish and Wildlife Service.

[FR Doc. E7–19595 Filed 10–5–07; 8:45 am]

BILLING CODE 4310–55–P

DEPARTMENT OF THE INTERIOR

Fish and Wildlife Service

50 CFR Part 17

RIN 1018–AV05

Endangered and Threatened Wildlife and Plants; Designation of Critical Habitat for the Sierra Nevada Bighorn Sheep and Proposed Taxonomic Revision

AGENCY: Fish and Wildlife Service, Interior.

ACTION: Proposed rule; reopening of comment period and notice of public hearing.

SUMMARY: We, the U.S. Fish and Wildlife Service (Service) announce the reopening of the public comment period and the scheduling of one public hearing on the proposed critical habitat designation for the Sierra Nevada bighorn sheep (*Ovis canadensis californiana*) and proposed taxonomic revision under the Endangered Species Act of 1973, as amended (Act). This action will provide all interested parties with an additional opportunity to submit written comments on the proposed designation and taxonomic revision. Comments previously submitted need not be resubmitted as they have already been incorporated into the public record and will be fully considered in any final decision.

DATES: We will accept comments and information until 5 p.m. on November 23, 2007, or at the public hearing. Any comments received after the closing date may not be considered in the final decision on the proposed designation of critical habitat.

Public Informational Meetings: October 24, from 1 p.m. to 3 p.m., in Bridgeport, CA and October 25, 2007, from 4 p.m. to 5 p.m., in Bishop, CA.

Public Hearing: October 25, 2007, between 6 p.m. and 8 p.m., in Bishop, CA.

ADDRESSES:

Public Informational Meetings: October 24, 2007, at the Memorial Hall, 744 N. School Street, Bridgeport, CA 93517, and October 25, 2007, at Tri-County Fair Grounds, Patio Room (patio area), Sierra Street and Fair Drive, Bishop, CA 93514.

Hearing: The public hearing will be held in the Tri-County Fair Grounds, Patio Room, Sierra Street and Fair Drive, Bishop, CA 93514.

Public Comments: Written comments and materials may be submitted to us by any one of the following methods:

1. You may submit written comments and information to Field Supervisor,

Nevada Fish and Wildlife Office, 1340 Financial Boulevard, Suite 234, Reno, NV 89502–7147.

2. You may hand-deliver written comments and information to our office at the above address.

3. You may fax your comments to 775–861–6301.

4. You may send comments by electronic mail (e-mail) to: snbighorn@fws.gov. For directions on how to submit electronic filing of comments, see the ''Public Comments Solicited'' section below.

5. You may submit comments via the Federal Rulemaking Portal: *http://www.regulations.gov*. Follow the instructions for submitting comments.

The proposed rule is available on the Internet at *http://www.fws.gov/nevada* or in hard copy form by contacting the Nevada Fish and Wildlife Office. Comments and materials received, as well as supporting documentation used in preparation of the proposed critical habitat rule for the Sierra Nevada bighorn sheep, will be available for public inspection, by appointment, during normal business hours at the Nevada Fish and Wildlife Office.

FOR FURTHER INFORMATION CONTACT: Bob Williams, Field Supervisor, Nevada Fish and Wildlife Office (telephone 775–861–6300; facsimile 775–861–6301).

SUPPLEMENTARY INFORMATION:

Public Comments Solicited

We intend that any final action resulting from this proposal will be as accurate and as effective as possible. Therefore, we solicit comments or suggestions on this proposed rule from the public, other concerned governmental agencies, Tribes, the scientific community, industry, or any other interested parties concerning the proposed rule. We particularly seek comments concerning:

(1) The reasons why we should or should not designate habitat as ''critical habitat'' under section 4 of the Act (16 U.S.C. 1531 *et seq.*), including whether the benefit of designation will outweigh threats to the species caused by designation such that the designation of critical habitat is prudent;

(2) Specific information on:

- The amount and distribution of Sierra Nevada bighorn sheep habitat,
- What areas that were occupied at the time of listing and that contain the features essential for the conservation of the subspecies should be included in the designation and why, and
- What areas not occupied at the listing are essential to the conservation of the subspecies and why;

(3) Any proposed critical habitat areas covered by existing or proposed conservation or management plans that we should consider for exclusion from the designation under section 4(b)(2) of the Act. We specifically request comment on the appropriateness of including or excluding lands covered by: (a) The Sierra Nevada Bighorn Sheep Recovery and Conservation Plan (Sierra Nevada Bighorn Sheep Interagency Advisory Group 1984); (b) the Bighorn Sheep Management Plan (National Park Service 1986); (c) the Inyo National Forest Resource & Management Plan (U.S. Forest Service 1988); and (d) the Conservation Strategy for Sierra Nevada Bighorn Sheep (Sierra Nevada Bighorn Sheep Interagency Advisory Group 1997). We request comment on how these plans do or do not benefit or protect the Sierra Nevada bighorn sheep, or its primary constituent elements, and if the benefit or protection provided by these plans is equal to or greater than the benefit that would be provided by designation of critical habitat;

(4) Land use designations and current or planned activities in the subject areas and their possible impacts on proposed critical habitat;

(5) Any foreseeable economic, national security, or other potential impacts resulting from the proposed designation and, in particular, any impacts on small entities, and information about the benefits of including or excluding any areas that exhibit those impacts; and

(6) Whether we could improve or modify our approach to designating critical habitat in any way to provide for greater public participation and understanding, or to better accommodate public concerns and comments.

You may submit your comments and material concerning the above actions by any one of several methods (see **ADDRESSES**). If you use e-mail to submit your comments, please include ''Attn: RIN 1018–AV05'' in your e-mail subject header, preferably with your name and return address in the body of your message. If you do not receive a confirmation from the system that we have received your e-mail message, please contact the Nevada Fish and Wildlife Office at telephone number 775–861–6300. Please note that the e-mail address *snbighorn@fws.gov* will be closed out at the termination of the public comment period.

Before including your address, phone number, e-mail address, or other personal identifying information in your comment, you should be aware that your entire comment—including your personal identifying information—may be made publicly available at any time. While you can ask us in your comment to withhold your personal identifying information from public review, we cannot guarantee that we will be able to do so. Comments received will be available for public inspection, by appointment, during normal business hours at the Nevada Fish and Wildlife Office (see **ADDRESSES** section).

Comments and information submitted during the initial comment period on the proposed rule need not be resubmitted as they will be incorporated into the public record as part of this comment period and will be fully considered in preparation of the final rule.

Background

On July 25, 2007, we published a proposed rule in the **Federal Register** (72 FR 40956) to designate critical habitat for the Sierra Nevada bighorn sheep. Twelve critical habitat units, totaling approximately 417,577 acres (168,992 hectares), are proposed as critical habitat for the Sierra Nevada bighorn sheep. The proposed critical habitat is located within Tuolumne, Mono, Fresno, Inyo, and Tulare counties, California. For locations of these proposed units, please consult the proposed rule. The initial public comment period for the proposal critical habitat was open for 60 days, ending on September 24, 2007.

Critical habitat is defined by the Act as:

(i): The specific areas within the geographic area occupied by the species at the time of listing pursuant to section 4 of the Act, on which are found those physical or biological features (1) essential to the conservation of the species, and (2) which may require special management considerations or protection, and

(ii): Specific areas outside the geographic areas occupied by the species at the time of listing that the Secretary determines are essential for the conservation of the species.

If the proposed critical habitat designation is finalized, section 7(a)(2) of the Act would require that Federal agencies ensure that actions they fund, authorize, or carry out are not likely to jeopardize the continued existence of the species or result in the destruction or adverse modification of critical habitat.

Section 4(b)(2) of the Act requires that we designate or revise critical habitat on the basis of the best scientific and commercial data available, after taking into consideration the economic, National security, and any other relevant impact of specifying any particular area as critical habitat.

Public Hearings

Section 4(b)(5)(E) of the Act requires that a public hearing be held if any person requests a hearing within 45 days of the publication of a proposed rule. In response to a request from the Inyo County Board of Supervisors, the Service will conduct one public hearing on the date and at the address described in the **DATES** and **ADDRESSES** sections above.

Oral comments may be limited in length. Persons wishing to make an oral statement for the record are encouraged to provide a written copy of their statement and present it to us at the hearing. In the event there is a large attendance, the time allotted for oral statements may be limited. Oral and written statements receive equal consideration. There are no limits on the length of written comments submitted to us. If you have any questions concerning the public hearing, please contact the Nevada Fish and Wildlife Office (see **ADDRESSES** section).

Persons needing reasonable accommodations in order to attend and participate in the public hearing should contact Jeannie Stafford at 775–861–6300 as soon as possible. In order to allow sufficient time to process requests, please call no later than one week before the hearing date. Information regarding this proposal is available in alternative formats upon request.

Authority

The authority for this action is the Endangered Species Act of 1973 (16 U.S.C. 1531 *et seq.*).

Dated: September 21, 2007.

David M. Verhey,

Acting Assistant Secretary for Fish and Wildlife and Parks.

[FR Doc. E7–19596 Filed 10–5–07; 8:45 am]

BILLING CODE 4310–55–P

DEPARTMENT OF THE INTERIOR

Fish and Wildlife Service

50 CFR Part 17

Endangered and Threatened Wildlife and Plants; 90-Day Finding on a Petition to List the Black-Footed Albatross (*Phoebastria nigripes*) as Threatened or Endangered

AGENCY: Fish and Wildlife Service, Interior.

ACTION: Notice of petition finding and initiation of status review.

SUMMARY: We, the U.S. Fish and Wildlife Service (Service), announce a 90-day finding on a petition to list the black-footed albatross (*Phoebastria nigripes*) as threatened or endangered under the Endangered Species Act of 1973, as amended (Act). We find that the petition presents substantial scientific or commercial information indicating that listing the black-footed albatross may be warranted. Therefore, with the publication of this notice, we are initiating a status review to determine if listing the species is warranted. To ensure that the review is comprehensive, we are soliciting data and other information regarding this species.

DATES: The finding announced in this document was made on October 9, 2007. To be considered in the 12-month finding for this petition, data, information, and comments must be submitted to us by December 10, 2007.

ADDRESSES: The complete supporting file for this finding is available for public inspection, by appointment, during normal business hours at the Pacific Islands Fish and Wildlife Office, 300 Ala Moana Boulevard, Room 3–122, Honolulu, HI 96813. You may submit data, information, comments, or questions concerning this species or our finding, by any one of several methods:

1. *By mail or hand-delivery to:* Patrick Leonard, Field Supervisor, Pacific Islands Fish and Wildlife Office, U.S. Fish and Wildlife Service, 300 Ala Moana Boulevard, Box 50088, Honolulu, HI 96850.

2. *By electronic mail (e-mail) to: fw1bfal@fws.gov.* Please include ''Attn: black-footed albatross'' in your e-mail subject header, preferably with your name and return address in the body of your message. If you do not receive a confirmation from the system that we have received your e-mail, contact us directly by calling the Pacific Islands Fish and Wildlife Office at 808–792–9400. Please note that the e-mail address above will be closed at the end of the public comment period.

3. *By fax to:* the attention of Patrick Leonard at 808–792–9581.

FOR FURTHER INFORMATION CONTACT: Patrick Leonard, Field Supervisor, Pacific Islands Fish and Wildlife Office (see **ADDRESSES**); by telephone (808–792–9400); or by facsimile (808–792–9581). Persons who use a telecommunications device for the deaf (TTD) may call the Federal Information Relay Service (FIRS) at 800–877–8339.

SUPPLEMENTARY INFORMATION:

Public Information Solicited

When we make a finding that a petition presents substantial information to indicate that listing a species may be warranted, we are required to promptly commence a review of the status of the species. To ensure that the status review is complete and based on the best available scientific and commercial information, we are soliciting additional information on the black-footed albatross. We request any additional information, comments, and suggestions from the public, other concerned governmental agencies, Tribes, the scientific community, industry, or any other interested parties concerning the status of the black-footed albatross. We are seeking information regarding the species' historical and current status and distribution, its biology and ecology, ongoing conservation measures for the species and its habitat, and threats to the species and its breeding and foraging habitats. Of particular interest is information pertaining to the factors the Service uses to determine if a species is threatened or endangered: (A) Present or threatened destruction, modification, or curtailment of its habitat or range; (B) overutilization for commercial, recreational, scientific, or educational purposes; (C) disease or predation; (D) the inadequacy of existing regulatory mechanisms; and (E) other natural or manmade factors affecting its continued existence.

We will base our 12-month finding on a review of the best scientific and commercial information available, including all information received during the public comment period. If you wish to comment or provide information, you may submit your comments and materials concerning this finding to the Field Supervisor, Pacific Islands Fish and Wildlife Office (see **ADDRESSES** section). Please note that comments merely stating support or opposition to the actions under consideration without providing supporting information, although noted, will not be considered in making a determination, as section 4(b)(1)(A) of the Act directs that determinations as to whether any species is a threatened or endangered species shall be made ''solely on the basis of the best scientific and commercial data available.'' At the conclusion of the status review, we will issue the 12-month finding on the petition, as provided in section 4(b)(3)(B) of the Act.

Before including your address, phone number, e-mail address, or other personal identifying information in your comments, you should be aware that

your entire comment—including your personal identifying information—may be made publicly available at any time. While you can ask us in your comment to withhold your personal identifying information from public review, we cannot guarantee that we will be able to do so.

Background

Section 4(b)(3)(A) of the Endangered Species Act of 1973, as amended (Act) (16 U.S.C. 1531 *et seq.*), requires that we make a finding on whether a petition to list, delist, or reclassify a species presents substantial scientific or commercial information to indicate that the petitioned action may be warranted. We are to base this finding on information provided in the petition, supporting information submitted with the petition, and information otherwise available in our files at the time we make the determination. To the maximum extent practicable, we are to make this finding within 90 days of our receipt of the petition and publish our notice of this finding promptly in the **Federal Register**.

Our standard for substantial information within the Code of Federal Regulations (CFR) with regard to a 90-day petition finding is ''that amount of information that would lead a reasonable person to believe that the measure proposed in the petition may be warranted'' (50 CFR 424.14(b)). If we find that substantial information was presented, we are required to promptly commence a review of the status of the species.

In making this finding, we relied on information provided by the petitioners that we determined to be reliable after reviewing sources referenced in the petition and information available in our files at the time of the petition review. We evaluated that information in accordance with 50 CFR 424.14(b). Our process in making this 90-day finding under section 4(b)(3)(A) of the Act and section 424.14(b) of our regulations is limited to a determination of whether the information in the petition meets the ''substantial information'' threshold.

Petition

On October 1, 2004, we received a formal petition dated September 28, 2004, requesting that we list the black-footed albatross (*Phoebastria nigripes*) as a threatened or endangered species, and that critical habitat be designated concurrently with listing. The petition, submitted by Earthjustice on behalf of the Turtle Island Restoration Network and the Center for Biological Diversity, identified itself as such and contained the names, addresses, and signatures of the requesting parties. The petition included supporting information regarding the species' taxonomy and ecology, historical and current distribution, present status, potential causes of decline, and active imminent threats. We sent a letter acknowledging receipt of the petition to Earthjustice on December 3, 2004. In our response, we advised the petitioners that we had determined that emergency listing was not warranted for the species at that time, and owing to a significant number of listing rules due in 2005 under court-order and court-approved settlement agreements, we had insufficient resources to initiate a 90-day finding at that time. This notice constitutes our 90-day finding for the petition to list the black-footed albatross.

Species Information

The seabird family Diomedeidae (albatrosses) contains four genera and as many as 24 species (Robertson and Nunn 1998, pp. 15–19), the majority of which breed and forage in the Antarctic and sub-Antarctic. The black-footed albatross is one of four species in the genus *Phoebastria,* all but one of which breed and forage exclusively in the North Pacific Ocean (the waved albatross, *Phoebastria irrorata,* nests on the equator in the Galapagos Islands and forages in the South Pacific along the Peruvian coast). Of the North Pacific albatrosses, the black-footed albatross is the only all-dark species; the plumage is uniformly sooty brown with a whitish ring at the base of the bill and a white patch behind the eye. As they mature, birds develop a white patch above and below the tail (Bourne 1982, cited in Hyrenbach 2002, p. 87). The wingspan of the black-footed albatross is 76 to 85 inches (193 to 216 centimeters) and its average weight is 6.17 pounds (2.30 kilograms) (Whittow 1993, p. 13).

According to the petition, recent breeding population estimates for the black-footed albatross range from 54,500 breeding pairs (The International Union for the Conservation of Nature and Natural Resources (IUCN) Red List 2003) to 64,500 breeding pairs (Brooke 2004). The most recent population assessment in our files falls squarely within this range, with a rough estimate of 61,000 pairs (U.S. Fish and Wildlife Service (USFWS) unpublished data 2006). The petition further states that the bulk of black-footed albatross today nest in the Northern Hawaiian Islands (Brooke 2004). Our information is in agreement, showing that approximately 97 percent of the breeding population nests in the predator-free Northwestern Hawaiian Islands, with most concentrated on two of these islands, Midway Atoll (35 percent) and Laysan Island (34 percent) USFWS unpublished data 2006). Approximately 3 percent of the world's black-footed albatross population nests on several remote islands in Japan. A few pairs nest on offshore islets in the main Hawaiian Islands, and from 1 to 3 pairs nest or attempt to nest annually on Wake Island in the Central Pacific, and on Guadalupe and San Benedicto Islands in Mexico.

Recent study of the mitochondrial DNA of black-footed albatrosses indicates that Hawaiian and Japanese birds are genetically distinct, and further research may indicate that taxonomic revision is warranted to reflect this difference, according to the petition (Walsh and Edwards 2004). Information in our files agrees with this assessment (Walsh and Edwards 2005, p. 293); however, at present the black-footed albatross continues to be treated by the taxonomic authorities as a single species (American Ornithologists' Union 2005; Integrated Taxonomic Information System 2007), therefore we treat it as such in this finding.

The petition describes the longevity and low reproductive rate of the black-footed albatross as factors that exacerbate their vulnerability to population impacts (Cousins and Cooper 1999; Walsh and Edwards 2004), and points out that for these reasons the species is highly sensitive to changes in adult survivorship (Lewison and Crowder 2003). Information in our files supports the petition's description of the life-history characteristics of this species. Black-footed albatrosses are long-lived (40 to 50 years) and slow to mature, with first breeding typically occurring at 8 to 10 years of age (Kendall *et al.* 2005, p. 11). The nesting phenology of the black-footed albatross is summarized by Whittow (1993, pp. 6–8). Pairs mate for life, and breed at a maximum of once each year (pairs skip years irregularly). Birds arrive at their nesting colonies in Hawaii and Japan in October, and most pairs produce their single egg by early December. Eggs hatch in January to February, and chicks fledge by mid to late July. Both adults take part in incubation and in brooding and feeding the chick.

As described in the petition, black-footed albatrosses that breed in Hawaii generally forage to the northeast, toward coastal waters of North America, and move further north in the summer (Brooke 2004). Information in our files agrees with this description of foraging behavior and range. Black-footed albatrosses forage throughout the North Pacific Ocean, frequenting coastal North America especially during the breeding

season (Fernandez *et al.* 2001, pp. 4–8). Foraging shifts north during the summer, after the breeding season, and black-footed albatrosses are the most abundant albatross species in the Gulf of Alaska and along the continental shelf south of the Aleutian Islands during this period (Suryan and Balogh 2005, pp. 1–5). The petition describes the black-footed albatross as a surface feeder and scavenger, seizing food and contact dipping primarily within 3 feet (1 meter) of the ocean's surface (Brooke 2004). The diet of adult albatross is primarily flying fish eggs, but also squid, fish, offal, and human refuse (Brooke 2004). The petition contends that scavenging is the activity that often brings the birds into contact with vessels. According to our files, the species' primary prey items are thought to be squid and eggs of flying fish (Whittow 1993, p. 3), but intensive diet studies are lacking. The information available in our files supports the petition's assertion that albatross are surface feeders and that their foraging behavior may expose them to vessels and fishing gear. Albatrosses scavenge food, will consume dead squid at the ocean surface (Pitman *et al.* 2004, pp. 162–164) and offal discarded from fishing vessels, pursue baited hooks as fishing gear is deployed, and opportunistically feed on fishery catch (e.g., swordfish; *Xiphius gladius*) that lies at the surface before it is brought on board (Duffy and Bisson 2006, p. 2).

Threats Analysis

Section 4 of the Act and implementing regulations (50 CFR 424) set forth procedures for adding species to the Federal List of Endangered and Threatened Wildlife and Plants. A species may be determined to be an endangered or threatened species due to one or more of the five factors described in section 4(a)(1) of the Act: (A) Present or threatened destruction, modification, or curtailment of its habitat or range; (B) overutilization for commercial, recreational, scientific, or educational purposes; (C) disease or predation; (D) the inadequacy of existing regulatory mechanisms; or (E) other natural or manmade factors affecting its continued existence. In making this finding, we evaluated whether threats to the black-footed albatross presented in the petition and other information available in our files at the time of the petition review may pose a concern with respect to the species' survival. Our evaluation of these threats is presented below.

A. The Present or Threatened Destruction, Modification, or Curtailment of the Species' Habitat or Range

The petition states that the current range of the black-footed albatross represents a significant curtailment of its historic range, and that colonies have been extirpated by feather- and egg-hunters from Johnston Atoll, Wake Island, Taongi Atoll (Marshall Islands), Marcus Island (Minami Torishima), Iwo Jima, and the Northern Mariana Islands (Lewison and Crowder 2003).

Information in our files provides a review of evidence of the former nesting range of the black-footed albatross (Tickell 2000, pp. 217–218). The species' current range and documented extirpations from Marcus, Iwo Jima, and Agrihan (Northern Mariana Islands), and anecdotal observations from Johnston atoll and Wake Island are highly suggestive that the breeding range of the black-footed albatross once comprised a string of small islands spanning the Pacific north of 15 degrees North latitude and predominantly north of the Tropic of Cancer, however, little information exists with which to deduce the original size of the extirpated populations.

Although information presented in the petition, as well as information in our files, indicates that the distribution of the black-footed albatross is now disjunct, the petition does not present substantial scientific or commercial information indicating that the species' range is continuing to contract. Nor does the petition present substantial scientific or commercial information indicating that the species' continued existence may be threatened as a result of past range contraction.

B. Overutilization for Commercial, Recreational, Scientific, or Educational Purposes

The petition mentions the mass killing of black-footed albatrosses within the last 150 years by feather-hunters causing the extirpation of these birds from several breeding islands (Lewison and Crowder 2003), but concludes that such direct exploitation today is likely quite rare. We are not aware of any information indicating that present-day overutilization of black-footed albatross for commercial, recreational, scientific, or educational purposes is occurring and posing a threat to the species.

As a result, we have determined that the petition does not present substantial scientific or commercial information indicating that the continued existence of the black-footed albatross is threatened by overutilization.

C. Disease or Predation

The petition states that because the ranges of the short-tailed albatross (*Phoebastria albatrus*) and black-footed albatross overlap, much of the disease factors affecting black-footed albatross are the same as those described in the July 31, 2000, final listing rule (65 FR 46643) for the endangered short-tailed albatross. The petition states that the final listing rule for short-tailed albatross explains that avian pox has been observed in chicks of albatross species on Midway Atoll. The petition also mentions that currently proliferating pathogens such avian cholera and West Nile virus are a potential risk to black-footed albatross.

The final listing rule for short-tailed albatross states ''an avian pox has been observed in chicks of albatross species on Midway Atoll, but whether this pox infects short-tailed albatrosses or may have an effect on the survivorship of any albatross species is unknown (T. Work, D.V.M., U.S. Geological Survey (USGS), Hawaii; 65 FR 46643). The petition presents no evidence that disease may threaten the black-footed albatross. Information in our files indicates that no diseases are known to affect the endangered short-tailed albatross population today (USFWS 2005, p. 14). Chicks of the closely-related Laysan albatross (*Phoebastria immutabilis*) do contract avian pox (*Poxvirus avium*), a mosquito-borne disease, in certain areas at Midway Atoll where the insects are present, but black-footed albatrosses do not nest in these areas and their chicks have not been observed with pox lesions (J. Klavitter, USFWS, pers. comm. 2006). A study of this disease in the Laysan albatross found that most chicks with pox lesions recovered and fledged, and that pox infection did not significantly affect fledging success at one colony (Young and VanderWerf 2006). Of a total of 16 black-footed albatross chicks found on Lehua Islet (offshore of Niihau Island, Hawaii) in 2005, two were observed with small pox lesions, but the birds appeared to be healthy and in good condition otherwise, and were presumed to have developed normally and fledged (E. VanderWerf, Service, pers. comm. 2006).

Information in our files indicates that potentially fatal diseases such as avian cholera, avian influenza, and West Nile virus have not been observed in North Pacific albatrosses. No experimental or other data are available with which to assess the susceptibility of black-footed albatrosses to avian cholera or flu, and

no occurrence of either disease has been recorded in Hawaii.

The petition states that predation by naturally occurring and introduced predators pose a threat to the black-footed albatross. To support this claim the petitioners provide an excerpt from the short-tailed albatross listing rule (65 FR 46643), which mentions predation by sharks on fledgling albatrosses around their natal islands. Although black-footed albatrosses have been subject to predation by sharks, a natural phenomenon throughout their evolutionary history, the petition does not present substantial information indicating that this source of mortality may threaten the species.

We find that the petition does not present substantial scientific or commercial information to indicate that disease or predation threatens the continued existence of the black-footed albatross.

D. Inadequacy of Existing Regulatory Mechanisms

The petition provides credible scientific information that incidental mortality in commercial longline fisheries may threaten the existence of the black-footed albatross (Gales 1998; Cousins and Cooper 2000; Cousins *et al.* 2000; IUCN Red List 2003; Lewison and Crowder 2003). Mortality is described as resulting from albatross diving on the baited hooks that float on the ocean's surface, and then either swallowing the baited hook or being caught and pulled underwater to drown (National Marine Fisheries Service (NMFS) 2004). Information in our files supports the petition, indicating that albatross have a propensity for pursuing baited fishing gear, especially those deployed by longline vessels, which leads to their being hooked on weighted lines, dragged underwater, and drowned (Tasker *et al.* 2001, p. 532). Black-footed albatrosses show this tendency, as evidenced by their documented pursuit of baited longline hooks (Melvin *et al.* 2001, p. 14) and their mortality on longline gear (Melvin *et al.* 2001, pp. 2, 35; NMFS—Alaska 2006, pp. 9–11; NMFS—Pacific Islands Regional Office (PIRO) unpublished data 2006).

The petition describes the IUCN reclassification of the black-footed albatross from Vulnerable to Endangered in 2003 (BirdLife International 2003). This reclassification was based on observed and estimated mortality in domestic and foreign longline fisheries, extrapolations of total annual mortality, and the predicted population declines resulting from models based on these data and estimates (Cousins *et al.* 2000; Lewison and Crowder 2003). Information in our files confirms the estimates of mortality and predictions of population response published by Lewison and Crowder (2003, pp. 748–750) and cited by the petition. This study includes a bounded range of fishery-related mortality estimates, with a best-case scenario (the lower bound of estimated annual mortality) still resulting in a population decline of more than 20 percent over the next 60 years. The results of these modeling efforts indicate that the rate of mortality of black-footed albatrosses may be high enough to result in long-term population decline (Cousins *et al.* 2000, pp. 166–172; Lewison and Crowder 2003, pp. 748–750). Relevant to this issue is a Service-contracted formal status assessment of the black-footed (and Laysan) albatross that will include a synthesis and review of all existing data and other information about the species, including an assessment of fishery-related mortality and statistical models of the population status and trajectory. This assessment is currently undergoing peer review in preparation for publication. This population assessment will be useful in critically evaluating the population trend for the black-footed albatross and threats, as part of our 12-month finding.

The petition states that each year commercial fisheries in the North Pacific inadvertently kill from 1 to 5 percent of the global population of the black-footed albatross (Lewison and Crowder 2003). The petition describes the documented mortality of black-footed albatrosses in U.S.-based fisheries (e.g., Cooper 2000) and satellite telemetry studies that point to overlap between the foraging range of the black-footed albatross and the operation of foreign-flag longline fisheries (Hyrenbach and Dotson 2003). Data in our files includes new information from satellite telemetry studies and public domain data on fishery distribution and effort since the petition was written, and provides support to the information in the petition that foreign longline fisheries in the North Pacific overlap with the foraging range of black-footed albatrosses and that incidental mortality in these fisheries is likely to occur (e.g., SPC–OFP 2004; Suryan and Balogh 2005, p. 1 and maps; Rivera 2006, pp. 7–9).

The petition includes information on the inadequacy and ineffectiveness of existing regulations to minimize the mortality and injury of black-footed albatrosses in longline fisheries. The petition contends that inadequate regulations include the requirement that seabird deterrents be used in the Hawaii-based longline fishery only north of 23 degrees North latitude (asserted to be inadequate since black-footed albatrosses also forage south of this latitude). In addition, the petition explains that the effectiveness of these deterrents has not been established. The petition states that blue dye is a potentially effective deterrent when used on squid bait, but it does not adhere well to the scaly, fin-fish bait that is now required in the shallow-set fishery based in Hawaii (Gilman 2003) and that is commonly used in the deep-set sector of that fishery.

Information in our files confirms that the deep- and shallow-set sectors of the Hawaii-based longline fishery operate both north and south of 23 degrees North latitude (NMFS–PIRO unpublished data 2006), and incidental injury and mortality of black-footed albatrosses takes place north and south of 23 degrees North latitude as well (NMFS–PIRO unpublished data 2004). Since the petition was written, new regulations have been published that require the use of seabird deterrents by all shallow-set vessels based in Hawaii regardless of where they fish. However, deep-set vessels, which expend more fishing effort south of 23 degrees North latitude than shallow-set vessels (NMFS–PIRO unpublished data 2006), are not required to use deterrents when fishing south of that latitude (NMFS 2005 (70 FR 75075), p. 75080). Only 20 percent of this sector of the fishery is monitored by observers; therefore, we have incomplete information about compliance with regulations, effectiveness of seabird deterrents, and rates and distribution of albatross mortality and injury.

The petition describes the documented high mortality rate of black-footed albatrosses in Hawaii-based longline fisheries through 2001, especially shallow-set (or swordfish-target) fisheries. The petition reports mortality estimates of 3,200 black-footed and Laysan albatross a year on average, and indicates that this number may be underestimated by 30 to 95 percent since it does not include birds that drop off hooks or are taken by predators prior to being counted by observers (NMFS 2001b). Information in our files provides fleet-wide estimates of albatross mortality in the Hawaii-based fishery based on a statistical model built from analysis of spatial and temporal patterns in observed interactions between albatrosses and fishing vessels (McCracken 2001, pp. 1–26; NMFS–PIRO unpublished data 2006). Estimated mortality of black-footed albatrosses in the Hawaii-based longline fishery ranged from 1,000 to 2,500 per year in the mid-to late 1990s (McCracken 2001,

pp. 19–20; NMFS–PIRO unpublished data 2006). This mortality dropped beginning in 2001 (NMFS–PIRO, unpublished data 2006; NMFS–PIFSC 2003, p. 3), coincident with the closure of the shallow-set sector of the fishery by a Federal court order intended to protect listed sea turtles (NMFS 2001a (66 FR 31561)). The estimated incidental capture of black-footed albatrosses fleet-wide was 1,339 in 2000 and dropped to an estimated total of 258 in 2001 (NMFS–PIRO unpublished data 2006). When the petition was submitted, the shallow-set fishery had just been reopened on a limited basis after a 3-year hiatus, with new measures in place to reduce the take of sea turtles (NMFS 2004a (69 FR 17329)). In the following year, however, the incidental mortality of black-footed albatrosses increased from an estimated 16 in 2004 to an estimated 89 in 2005 (NMFS–PIRO unpublished data 2006). This fishery was closed again in March 2006 (NMFS 2006 (71 FR 14824)) because the limit on incidental capture of sea turtles established through the National Marine Fisheries Service (NMFS) consultation under section 7 of the Act had been reached. This temporary closure remained in effect until December 31, 2006. The shallow-set fishery reopened on January 1, 2007, with the same bycatch reduction measures in place to reduce the take of sea turtles as had been instituted previously.

The petition describes the documented mortality rate of black-footed albatrosses in Alaska-based demersal longline fisheries, and states that between 1993 and 2002, an observed 1,935 black-footed albatrosses were killed in Alaska-based fisheries (NMFS 2003). Although regulations promulgated in 2004 require measures to reduce the incidental mortality of seabirds in Alaska-based longline fisheries, including a suite of seabird deterrent devices and practices, the petition states that the rate of observer coverage is inadequate to monitor compliance with regulations requiring the use of seabird deterrents. According to information in our files, although all longline vessels greater than 26 feet (8 meters) in length operating out of Alaska are required to use seabird deterrents to minimize the incidental mortality of short-tailed albatrosses and other seabirds, vessels less than 26 feet (8 meters) in length are exempt from these requirements (NMFS 2004b, p. 1947). These seabird deterrents, particularly paired streamer lines, have proven to be highly effective under experimental conditions (Melvin *et al.* 2001, pp. 15–18), when constructed to appropriate specifications and deployed correctly (Melvin and Robertson 2000, p. 181). The largest vessels (greater than 125 feet (38 meters) in length; approximately 128 of which operate out of Alaska), are required to carry observers 100 percent of the time. However, the halibut fishery, which in 2004 comprised more than 1,000 smaller demersal longline vessels (J. Gharrett, NOAA Fisheries, pers. comm. 2006), is exempt from observer coverage (Alaska Fisheries Science Center (AFSC) 2006, p. 2).

The petition states that the black-footed albatross remains at considerable risk of mortality from international fleets that are not required to employ the same seabird bycatch mitigation measures as U.S. fisheries, and contends that foreign pelagic and demersal longline fisheries account for a significant portion of the global annual mortality of black-footed albatross (Cooper 2000; Lewison and Crowder 2003). Information in our files indicates that despite progress toward international seabird protection agreements, as of yet there is no binding treaty or law that requires international fleets to employ mitigation measures to reduce the incidental mortality of the black-footed albatross throughout its range (Hall and Haward, p. 183). Although, as the petition describes, direct records of black-footed albatross mortality rates in non-U.S. fisheries are lacking (Cousins and Cooper 2000, p. 62; Tasker *et al.* 2000, p. 532), references cited by the petitioners and in our files describe the distribution and effort of the largest of these fisheries based on data available from the Secretariat of the Pacific Community (Lewison and Crowder 2003, p. 744; SPC–OFP 2004). Furthermore, as indicated in the petition, data exists describing high rates of black-footed albatross mortality in U.S.-based longline fisheries. Information in our files indicates that non-U.S. longline fisheries combined represent an order of magnitude more fishing effort than the longline fisheries operating out of Alaska and Hawaii (e.g., Cousins *et al.* 2000, p. 165), and they are known to overlap with the foraging range of the black-footed albatross (e.g., Lewison and Crowder 2003, p. 745; Hyrenbach and Dotson 2003, pp. 396–398, 401), suggesting that the degree of incidental mortality resulting from international fisheries may likely be greater than that observed in U.S.-based fisheries.

Citing the results of studies that extrapolated total estimated mortality of black-footed albatrosses in all North Pacific longline fisheries, the petition states that the rate of mortality in U.S. and foreign longline fisheries in the North Pacific likely has population-level effects (Cooper 2000; Lewison and Crowder 2003). The petition notes that species with a low reproductive rate such as the black-footed albatross are susceptible to adult mortality, and even small changes in adult survival can affect population dynamics (Cousins and Cooper 2000; Lewison and Crowder 2003). The petition states that loss of breeding adults has a ''ripple effect'' in two ways: the current year's actual or potential breeding effort is lost (because a single adult cannot raise a chick) and several future years' effort is lost as well as the remaining adult seeks a new mate. Furthermore, incidental mortality of black-footed albatrosses in longline fisheries apparently is female-biased, thus exacerbating potential population level effects of fishery-related mortality on this highly monogamous species (Walsh and Edwards 2004).

The petition states that there are numerous international and multilateral initiatives and advisory groups that have made recommendations for decreasing the incidental mortality of black-footed albatrosses and other seabirds in North Pacific fisheries. However, no binding agreement or international law yet exists that requires or enforces the use of seabird deterrents and minimization of this mortality in high-seas fisheries (e.g., Cousins *et al.* 2000, pp. 167–168). The petition notes that mortality of black-footed albatrosses occurs incidental to fishing activities although the Migratory Bird Treaty Act of 1918 (MBTA), as amended, specifically prohibits take of migratory birds. The term ''take'' under the MBTA is defined as to ''...pursue, hunt, shoot, wound, kill, trap, capture, or collect...'' (50 CFR 10.12). The petition contends that the take prohibition of the MBTA has not been enforced, and that incidental take of black-footed albatross by the longline fishing industry has not been adequately regulated.

Although mitigation measures have reduced mortality of black-footed albatrosses in some (U.S.-based) fisheries, the information in the petition indicates that fishery-related threats to the species throughout its range are ongoing. We find that the petition presents substantial scientific or commercial information to indicate that the inadequacy of existing regulatory mechanisms may threaten the continued existence of the black-footed albatross.

E. Other Natural or Manmade Factors Affecting the Species' Continued Existence

The petition describes the high levels of contaminants, such as heavy metals

and organochlorines (e.g., polychlorinated biphenyls (PCBs) and dichloro-diphenyl-trichloroethane (DDT)), found in black-footed albatross tissue (Jones *et al.* 1994; Ludwig *et al.* 1998). These substances have been correlated with egg-shell thinning and embryo death in the black-footed albatross and are found in concentrations that have caused reproductive and neurological problems in other species (Jones *et al.* 1994; Ludwig *et al.* 1998).

Information in our files indicates that black-footed albatross are exposed to contaminants via their diet (Finkelstein *et al.* 2006, p. 681). Contaminants such as organochlorines and mercury biomagnify up the marine food chain and are at higher concentrations in long-lived marine predators (Finkelstein *et al.* 2006, pp. 678–679). Biomagnified concentrations of organochlorines and mercury are higher in North Pacific albatrosses than in species in the Southern hemisphere (where ambient levels of these contaminants are lower overall) (Guruge *et al.* 2001, p. 392). In the North Pacific, concentrations of these contaminants are higher in black-footed than in Laysan albatrosses (Guruge *et al.* 2001, p. 392; Finkelstein *et al.* 2006, p. 680). As described in the petition, the organochlorine and mercury levels found in black-footed albatrosses in 1992 and 1993 were high enough to pose a toxicological risk and interfere with reproduction (Ludwig *et al.* 1998). Information in our files supports the petition's contention that these contaminants may pose a threat to black-footed albatross. Since the petition was written, new information indicates that concentrations of PCBs and dichloro-diphenyl-dichloroethylene (DDE) in black-footed and Laysan albatrosses were reported to be 160 to 360 percent higher in samples from 2000 and 2001 than in samples from 1992 and 1993 (Finkelstein *et al.* 2006, p. 684). The proportional increase found in the black-footed albatross over this time period was twice that observed in the Laysan albatross (Finkelstein *et al.* 2006, p. 684). Results of recent studies indicate that these contaminant levels are associated with altered immune function in black-footed albatrosses (Finkelstein *et al.*, in review). In addition, black footed albatrosses are carrying organochlorine burdens at concentrations that have caused endocrine disruption and altered immune function in gulls and terns from the Great Lakes (Myra Finkelstein, University of California at Santa Cruz, pers. comm. 2006).

We find that the petition presents substantial scientific or commercial information to indicate that the ingestion of a variety of contaminants, such as organochlorine compounds and heavy metals, may pose a threat to the continued existence of the black-footed albatross.

Finding

We have reviewed the petition, literature cited in the petition, and information in our files. The petition presents reliable information to indicate that the lack of adequate regulatory mechanisms to minimize incidental mortality in commercial fisheries and the ingestion of environmental contaminants may threaten the black-footed albatross. The information in our files at this time supports the petition's statements regarding these threats to the black-footed albatross. Thus, on the basis of our review, we find that the petition presents substantial scientific or commercial information indicating that listing the black-footed albatross as threatened or endangered may be warranted, and we are initiating a status review of the species. At the conclusion of the status review which will involve a review of the information in, and results of, our status assessment currently being peer reviewed, we will issue a 12-month finding, in accordance with section 4(b)(3)(B) of the Act, as to whether or not the Service believes a proposal to list the species is warranted.

We have reviewed the available information to determine if the existing and foreseeable threats pose an emergency. We have determined that although there are apparent threats to the species, they do not appear to be of such a magnitude as to pose an immediate and irreversible threat to the species such as to warrant emergency listing at this time. However, if at any time we determine that emergency listing of the black-footed albatross is warranted, we will seek to initiate an emergency listing.

References Cited

A complete list of all references cited herein is available, upon request, from the Pacific Islands Fish and Wildlife Office (see **ADDRESSES** section above).

Author

The primary author of this notice is the staff of the Pacific Islands Fish and Wildlife Office (see **ADDRESSES** section above).

Authority

The authority for this action is the Endangered Species Act of 1973, as amended (16 U.S.C. 1531 *et seq.*).

Dated: September 27, 2007.

Kenneth Stansell,

Deputy Director, Fish and Wildlife Service.

[FR Doc. E7–19690 Filed 10–5–07; 8:45 am]

BILLING CODE 4310–55–P

Notices

Federal Register

Vol. 72, No. 194

Tuesday, October 9, 2007

This section of the FEDERAL REGISTER contains documents other than rules or proposed rules that are applicable to the public. Notices of hearings and investigations, committee meetings, agency decisions and rulings, delegations of authority, filing of petitions and applications and agency statements of organization and functions are examples of documents appearing in this section.

DEPARTMENT OF AGRICULTURE

Submission for OMB Review; Comment Request

October 2, 2007.

The Department of Agriculture has submitted the following information collection requirement(s) to OMB for review and clearance under the Paperwork Reduction Act of 1995, Public Law 104–13. Comments regarding (a) Whether the collection of information is necessary for the proper performance of the functions of the agency, including whether the information will have practical utility; (b) the accuracy of the agency's estimate of burden including the validity of the methodology and assumptions used; (c) ways to enhance the quality, utility and clarity of the information to be collected; (d) ways to minimize the burden of the collection of information on those who are to respond, including through the use of appropriate automated, electronic, mechanical, or other technological collection techniques or other forms of information technology should be addressed to: Desk Officer for Agriculture, Office of Information and Regulatory Affairs, Office of Management and Budget (OMB), *OIRA_Submission@OMB.EOP.GOV* or fax (202) 395–5806 and to Departmental Clearance Office, USDA, OCIO, Mail Stop 7602, Washington, DC 20250–7602. Comments regarding these information collections are best assured of having their full effect if received within 30 days of this notification. Copies of the submission(s) may be obtained by calling (202) 720–8681.

An agency may not conduct or sponsor a collection of information unless the collection of information displays a currently valid OMB control number and the agency informs potential persons who are to respond to the collection of information that such persons are not required to respond to the collection of information unless it displays a currently valid OMB control number.

Rural Utilities Service

Title: 7 CFR 1777, Section 306C Water & Waste Disposal (WWD) Loans & Grants.

OMB Control Number: 0572–0109.

Summary of Collection: Rural Utilities Service is authorized to make loans and grants under section 306C of the Consolidated Farm and Rural Development Act (7.U.S.C. 1926c).

This program funds facilities and projects in low income rural communities whose residents face significant health risks. These communities do not have access to or are not served by adequate affordable water supply systems or waste disposal facilities. The loans and grants will be available to provide water and waste disposal facilities and services to these communities.

Need and Use of the Information: Eligible applicants submit an application package and other information to Rural Development field offices to develop or improve community water and waste disposal systems. In one percent of the cases an applicant will use the funds to enable individuals to connect to the applicant's system or improve residences to use the water or waste disposal system. In this situation, an applicant will make loans and grants to individuals and the applicant will submit an implementation plan, memorandum of agreement and use of funds report.

Description of Respondents: Not-for-profit institutions; Individuals or households.

Number of Respondents: 1.

Frequency of Responses: Reporting: Annually.

Total Burden Hours: 9.

Charlene Parker,

Departmental Information Collection Clearance Officer.

[FR Doc. E7–19757 Filed 10–5–07; 8:45 am]

BILLING CODE 3410–15;–P

DEPARTMENT OF AGRICULTURE

Submission for OMB Review; Comment Request

October 2, 2007.

The Department of Agriculture has submitted the following information collection requirement(s) to OMB for review and clearance under the Paperwork Reduction Act of 1995, Public Law 104–13. Comments regarding (a) Whether the collection of information is necessary for the proper performance of the functions of the agency, including whether the information will have practical utility; (b) the accuracy of the agency's estimate of burden including the validity of the methodology and assumptions used; (c) ways to enhance the quality, utility and clarity of the information to be collected; (d) ways to minimize the burden of the collection of information on those who are to respond, including through the use of appropriate automated, electronic, mechanical, or other technological collection techniques or other forms of information technology should be addressed to: Desk Officer for Agriculture, Office of Information and Regulatory Affairs, Office of Management and Budget (OMB), *OIRA_Submission@OMB.EOP.GOV* or fax (202) 395–5806 and to Departmental Clearance Office, USDA, OCIO, Mail Stop 7602, Washington, DC 20250–7602. Comments regarding these information collections are best assured of having their full effect if received within 30 days of this notification. Copies of the submission(s) may be obtained by calling (202) 720–8958.

An agency may not conduct or sponsor a collection of information unless the collection of information displays a currently valid OMB control number and the agency informs potential persons who are to respond to the collection of information that such persons are not required to respond to the collection of information unless it displays a currently valid OMB control number.

Food Safety and Inspection Service

Title: Specified Risk Materials.

OMB Control Number: 0583–0129.

Summary of Collection: The Food Safety and Inspection Service (FSIS) has been delegated the authority to exercise the functions of the Secretary as provided in the Federal Meat Inspection Act (FMIA) (21 U.S.C. 601 *et seq.*) This statute mandates that FSIS protect the public by ensuring that meat products are safe, wholesome, unadulterated, and properly labeled and packaged. FSIS requires that official establishments that slaughter cattle and/or process carcasses

or parts of cattle develop written procedures for the removal, segregation, and disposition of specified risk materials (SRMs). Establishments are also required by FSIS to maintain daily records sufficient to document the implementation and monitoring of their procedures for the removal, segregation, and disposition of SRMs, and any corrective actions taken to ensure that such procedures are effective.

Need and Use of the Information: FSIS will collect information from establishments to ensure that cattle slaughtered for meat product are free from Bovine Spongiform Encephalopathy.

Description of Respondents: Business or other for-profit.

Number of Respondents: 3,512.

Frequency of Responses: Recordkeeping; Reporting: On occasion.

Total Burden Hours: 123,216.

Food Safety and Inspection Service

Title: Advanced Meat Recovery Systems.

OMB Control Number: 0583–0130.

Summary of Collection: The Food Safety and Inspection Service (FSIS) has been delegated the authority to exercise the functions of the Secretary as provided in the Federal Meat Inspection Act (FMIA) (21 U.S.C. 601 *et seq.*). This statute mandates that FSIS protect the public by ensuring that meat and poultry products are safe, wholesome, unadulterated, and properly labeled and packaged. FSIS requires that official establishments that produce meat from Advanced Meat Recovery (AMR) systems ensure that bones used for AMR systems do not contain brain, trigeminal ganglia, or spinal cord, to test for calcium, iron, spinal cord, and dorsal root ganglia, to document their testing protocols, to assess the age of cattle product used in the AMR system, and to document their procedures for handling product in a manner that does not cause product to be misbranded or adulterated, and to maintain records of their documentation and test results.

Need and Use of the Information: FSIS will collect information from establishments to ensure that the meat product produced by the use of AMR systems is free from Bovine Spongiform Encephalopathy.

Description of Respondents: Business or other for-profit.

Number of Respondents: 56.

Frequency of Responses: Recordkeeping; Reporting: On occasion.

Total Burden Hours: 25,209.

Ruth Brown,

Departmental Information Collection Clearance Officer.

[FR Doc. E7–19758 Filed 10–5–07; 8:45 am]

BILLING CODE 3410–DM–P

DEPARTMENT OF AGRICULTURE

Food Safety and Inspection Service

[Docket No. FSIS–2007–0041]

Non-Escherichia coli O157:H7 Shiga Toxin-Producing E. coli

AGENCY: Food Safety and Inspection Service, USDA.

ACTION: Notice of public meeting.

SUMMARY: This notice is announcing that the U.S. Department of Agriculture's (USDA) Food Safety and Inspection Service (FSIS), the Food and Drug Administration's Center for Food Safety and Applied Nutrition (FDA CFSAN), and the National Centers for Disease Control and Prevention (CDC) will co-sponsor a public meeting on October 17, 2007. The purpose of the meeting is to consider the public health significance of non-*Escherichia coli* (*E. coli*) O157:H7 Shiga toxin-producing *E. coli*.

DATES: The public meeting will be held on Wednesday, October 17, 2007, 8:30 a.m. to 3:30 p.m.

ADDRESSES: The meeting will be held at the Arlington campus of George Mason University, 3401 N. Fairfax Drive, Room 244, Arlington, VA 22201.

Registration

Pre-registration for this meeting is encouraged. To pre-register to attend in person or via teleconference, access the FSIS Web site, *http://www.fsis.usda.gov*. Contact Sheila Johnson for more information on logistics at 202–690–6498 or via e-mail at *Sheila.johnson@fsis.usda.gov*.

All documents related to the meeting will be available for public inspection in the FSIS Docket Room, 1400 Independence Avenue, SW., Room 2534 South Building, Washington, DC 20250, between 8:30 a.m. and 4:30 p.m., Monday through Friday, as soon as they become available.

FSIS will finalize an agenda on or before the meeting date and post it on the FSIS Web page at: *http://www.fsis.usda.gov/News/Meetings_&_Events/*. Also, when it becomes available, the official transcript of the meeting will be kept in the FSIS Docket Room at the above address and will also be posted on the Agency Web site, *http://www.fsis.usda.gov*.

FOR FURTHER INFORMATION CONTACT: Denise Eblen, phone (202) 690–6238, fax (202) 690–6334, e-mail: *Denise.eblen@fsis.usda.gov* or at the mail address: U.S. Department of Agriculture, Food Safety and Inspection Service, Office of Public Health Science, 1400 Independence Avenue, SW., 357 Aerospace Center, Washington, DC 20250–3766.

Persons requiring a sign language interpreter or other special accommodations should notify Dr. Eblen by October 10, 2007.

SUPPLEMENTARY INFORMATION:

Background

Shiga toxin-producing *E. coli* (STEC) was first identified in the early 1980s in North America as the cause of outbreaks of bloody diarrhea, often leading to severe and fatal illness. These outbreaks were associated with ground beef consumption, and *E. coli* O157:H7 was the STEC identified as causing the illnesses. In 1994, FSIS notified the public that raw ground beef contaminated with *E. coli* O157:H7 is adulterated under the FMIA unless the ground beef is processed to destroy this pathogen. Also in 1994, FSIS began sampling and testing ground beef for *E. coli* O157:H7.

On January 19, 1999, FSIS published a policy statement in the **Federal Register** that explained that if non-intact raw beef products or intact raw beef products that are to be processed into non-intact product prior to distribution for consumption are found to be contaminated with *E. coli* O157:H7, they will be deemed to be adulterated if not processed to destroy the pathogen (64 FR 2803).

Shiga toxins are produced by other *E. coli* serotypes in addition to *E. coli* O157:H7. While many STEC strains have been found in ruminant feces, not all of these STECs are pathogenic. The scientific community believes that the STECs that are pathogenic not only contain the Shiga toxin but also additional virulence determinants that, together with the toxin, cause illnesses similar to those caused by *E. coli* O157:H7. The subset of STECs that contain both the toxin and these additional virulence determinants, including *E. coli* O157:H7, is known as enterohemorrhagic *E. coli* (EHEC).

In the United States, there is growing awareness that STECs other than *E. coli* O157:H7 (non-O157:H7 STECs) cause sporadic and outbreak-associated illnesses. This awareness is attributable in part to the increasing availability of laboratory reagents that can be used to diagnose illnesses and to detect strains of STECs in food and other

environmental samples. The number of non-O157:H7 STEC infections reported to the CDC from 2000 to 2005 increased from 171 to 501 cases, suggesting a higher burden of illness than previously thought.

Outbreaks associated with non-O157:H7 STECs have been reported worldwide, including thirteen in the United States from 1990 to 2006. The 2006 data is still preliminary. Many outbreaks were attributed to consumption of fresh produce; none were attributed to ground beef consumption. However, in 2006, non-O157:H7 STEC illness was diagnosed in a patient in New York who had consumed ground beef shortly before illness onset. The same STEC strain, indistinguishable by pulsed field gel electrophoresis, was detected in the patient's stool and in leftover ground beef that the patient had consumed. In this case, FSIS was unable to take further action because the product could not be definitively traced to a production lot.

FSIS, FDA CFSAN, and CDC will hold a public meeting on October 17, 2007, to solicit input from industry, consumers, academia, and other public health and regulatory agencies on the issue of whether non-O157:H7 STECs should also be considered to be adulterants. This meeting will rely on relevant data in addressing the most important questions that underlie this issue, including:

- What is the epidemiology of non-O157:H7 STEC illness?
- What can be done to enhance the surveillance and reporting of non-O157:H7 STEC illnesses?
- What is the prevalence of non-O157:H7 STEC in livestock and in finished product? Are species other than cattle, such as sheep, goats, and swine, important sources of non-O157:H7 STECs?
- What are the best methods for detecting pathogenic non-O157:H7 STECs in food? What are the most relevant markers for pathogenic STECs?
- Are interventions designed to remove or destroy *E. coli* O157:H7 in foods or raw products effective against non-O157:H7 STECs as well?
- How should regulatory agencies define, monitor, and control pathogenic non-O157:H7 STECs in food or raw products?

All interested parties are welcome to attend the meeting and to submit written comments and suggestions through October 15, 2007 to Dr. Eblen by phone (202) 690–6238, fax (202) 690–6334, e-mail: *Denise.eblen@fsis.usda.gov*, or at the mail address: U.S. Department of Agriculture, Food Safety and Inspection Service, Office of Public Health Science, 1400 Independence Avenue, SW., 357 Aerospace Center, Washington, DC 20250–3766. Individuals who do not wish FSIS to post their personal contact information—mailing address, e-mail address, telephone number—on the Internet may leave the information off their comments.

The comments and the official transcript of the meeting, when they become available, will be posted on the agency's Web site at *http://www.fsis.usda.gov*.

Additional Public Notification

Public awareness of all segments of rulemaking and policy development is important. Consequently, in an effort to ensure that minorities, women, and persons with disabilities are aware of this notice, FSIS will announce it online through the FSIS Web page located at *http://www.fsis.usda.gov/regulations/2007_Notices_Index/*. FSIS will also make copies of this **Federal Register** publication available through the FSIS Constituent Update, which is used to provide information regarding FSIS policies, procedures, regulations, **Federal Register** notices, FSIS public meetings, and other types of information that could affect or would be of interest to constituents and stakeholders. The Update is communicated via Listserv, a free electronic mail subscription service for industry, trade groups, consumer interest groups, health professionals, and other individuals who have asked to be included. The Update is also available on the FSIS Web page. Through Listserv and the Web page, FSIS is able to provide information to a much broader and more diverse audience. In addition, FSIS offers an electronic mail subscription service which provides automatic and customized access to selected food safety news and information. This service is available at *http://www.fsis.usda.gov/news_and_events/email_subscription/*. Options range from recalls to export information to regulations, directives and notices. Customers can add or delete subscriptions themselves, and have the option to password protect their accounts.

Done at Washington, DC, on: October 4, 2007.

Alfred V. Almanza,

Administrator.

[FR Doc. 07–4975 Filed 10–4–07; 1:45 pm]

BILLING CODE 3410–DM–P

DEPARTMENT OF AGRICULTURE

Forest Service

Notice of New Recreation Fee Site; Federal Lands Recreation Enhancement Act, (Title VIII, Pub. L. 108–447)

AGENCY: Daniel Boone National Forest, USDA Forest Service.

ACTION: Notice of new recreation fee site.

SUMMARY: The Daniel Boone National Forest will begin charging a $25 group day use rental fee for the Alpine Picnic Area picnic shelter, the Natural Arch Scenic Area picnic shelter and the Natural Arch Scenic Area amphitheater. These facilities are currently only available on a first come first serve basis. Rentals of other picnic shelters on the Daniel Boone National Forest have shown that groups would like an option to reserve the shelters for their use. Shelter rentals allow public groups to plan activities in advance with the guarantee the shelter will be available for their use. The facilities will continue to be available on a first come first serve basis if not reserved. Fee revenue will be used to help cover the administrative cost of reserving and preparing the facilities for group rentals.

DATES: The fee is scheduled for implementation in May of 2008.

ADDRESSES: Recreation Fee Program Coordinator, Daniel Boone National Forest, 1700 Bypass Road, Winchester, KY 40391.

FOR FURTHER INFORMATION CONTACT: Myra Williamson, Recreation Fee Coordinator, 859–745–3154.

SUPPLEMENTARY INFORMATION: The Federal Recreation Lands Enhancement Act (Title VIII, Pub. L. 108–447) directed the Secretary of Agriculture to publish advance notice in the **Federal Register** whenever new recreation fee areas are established. This new fee will be reviewed by a Recreation Resource Advisory Committee prior to a final decision and implementation. The Daniel Boone National Forest currently charges $25 group use rental fees for two other picnic shelters under the authority of the Federal Recreation Lands Enhancement Act.

Dated: October 1, 2007.

Jerome E. Perez,

Daniel Boone National Forest Supervisor.

[FR Doc. 07–4964 Filed 10–5–07; 8:45 am]

BILLING CODE 3410–52–M

DEPARTMENT OF AGRICULTURE

Rural Housing Service

Notice of Request for Extension of a Currently Approved Information Collection

AGENCY: Rural Housing Service, USDA.

ACTION: Proposed collection; comments requested.

SUMMARY: In accordance with the Paperwork Reduction Act of 1995, this notice announces the Rural Housing Service's intention to request an extension for a currently approved information collection in support of the program of the Agency's use of supervised bank accounts (SBA).

DATES: Comments on this notice must be received by December 10, 2007, to be assured of consideration.

FOR FURTHER INFORMATION CONTACT: Janet Stouder, Deputy Director, Multi-Family Housing Portfolio Management Division, RHS, STOP 0782, U.S. Department of Agriculture, 1400 Independence Avenue, SW., Washington, DC 20250–0782. Telephone: (202) 720–9728.

SUPPLEMENTARY INFORMATION:

Title: 7 CFR 1902–A, Supervised Bank Accounts.

OMB Number: 0575–0158.

Expiration Date of Approval: January 31, 2008.

Type of Request: Extension of a Currently Approved Information Collection.

Abstract: The Agency extends financial assistance to applicants that do not qualify for loans under commercial rates and terms.

The Agency use SBAs as a mechanism to (1) ensure correct disbursement and expenditure of all funds designated for a project; (2) help a borrower properly manage its financial affairs; (3) ensure that the Government's security is protected adequately from fraud, waste and abuse.

SBAs are mandatory for Multi-Family Housing (MFH) reserve accounts. The MFH funds must be kept in the SBA for the full term of a loan. Any funds withdrawn for disbursement for an authorized purpose require a countersignature from an Agency official.

This regulation prescribes the policies and responsibilities for the use of SBAs. In carrying out the mission as a supervised credit Agency, this regulation authorizes the use of supervised accounts for the disbursement of funds. The use may be necessitated to disburse Government funds consistent with the various stages of any development (construction) work actually achieved. On limited occasions, a supervised account is used to provide temporary credit counseling and oversight of those being assisted who demonstrate an inability to handle their financial affairs responsibly. Another use is for depositing MFH reserve account funds in a manner requiring Agency co-signature for withdrawals. MFH reserve account funds are held in a reserve account for the future capital improvement needs for apartment properties. Supervised accounts are established to ensure Government security is adequately protected against fraud, waste and abuse.

The legislative authority for requiring the use of supervised accounts is contained section 510 of the Housing Act of 1949, as amended (42 U.S.C. 1480). These provisions authorize the Secretary of Agriculture to make such rules and regulations as deemed necessary to carry out the responsibilities and duties the Government is charged with administering.

Estimate of Burden: Public reporting burden for this information collection is estimated to average .79 hours per response.

Respondents: Small businesses.

Estimated Number of Respondents: 20,000.

Estimated Number of Responses per Respondent: 3.5.

Estimated Number of Responses: 70,100.

Estimated Total Annual Burden on Respondents: 55,708.

Copies of this information collection can be obtained from Cheryl Thompson, Regulations and Paperwork Management Branch, at (202) 692–0043.

Comments: Comments are invited on: (a) Whether the proposed collection of information is necessary for the proper performance of the functions of the Agency, including whether the information will have practical utility; (b) the accuracy of the Agency's estimate of the burden of the proposed collection of information including the validity of the methodology and assumptions used; (c) ways to enhance the quality, utility and clarity of the information to be collected; and (d) ways to minimize the burden of the collection of information on those who are to respond, including through the use of appropriate automated, electronic, mechanical, or other technological collection techniques or other forms of information technology. Comments may be sent to Cheryl Thompson, Regulations and Paperwork Management Branch, U.S. Department of Agriculture, Rural Development, STOP 0742, 1400 Independence Ave., SW., Washington, DC 20250. All responses to this notice will be summarized and included in the request for OMB approval. All comments will also become a matter of public record.

Dated: September 27, 2007.

Russell T. Davis,

Administrator, Rural Housing Service.

[FR Doc. E7–19848 Filed 10–5–07; 8:45 am]

BILLING CODE 3410–XV–P

DEPARTMENT OF COMMERCE

Foreign–Trade Zones Board

[Docket 48–2007]

Foreign–Trade Zone 219 – Yuma, Arizona, Application for Subzone, Johnson Controls Battery Group, Inc., (Lead–Acid Batteries), Yuma, Arizona

An application has been submitted to the Foreign–Trade Zones Board (the Board) by the Yuma County Airport Authority, grantee of FTZ 219, requesting special–purpose subzone status for the manufacture of lead–acid batteries at the facility of Johnson Controls Battery Group, Inc. (JCBGI), located in Yuma, Arizona. The application was submitted pursuant to the provisions of the Foreign–Trade Zones Act, as amended (19 U.S.C. 81a–81u), and the regulations of the Board (15 CFR part 400). It was formally filed on September 28, 2007.

The JCBGI facility (120 employees, 15 acres, 4–5 million battery/year capacity) is located at 3470 South Arizona Avenue, in Yuma, Arizona. The facility will be used to form, fill and distribute batteries (duty–free) using imported unformed batteries (duty–free).

The application indicates that FTZ designation would allow JCBGI to utilize certain CBP procedures resulting in increased efficiencies for its logistics operations, and would also have state/local tax–related benefits. The request indicates that the savings from FTZ procedures would help improve the plant's international competitiveness.

In accordance with the Board's regulations, a member of the FTZ staff has been designated examiner to investigate the application and report to the Board.

Public comment is invited from interested parties. Submissions (original and 3 copies) shall be addressed to the Board's Executive Secretary at the address below. The closing period for their receipt is December 10, 2007. Rebuttal comments in response to material submitted during the foregoing period may be submitted during the

subsequent 15-day period to December 24, 2007.

A copy of the application and accompanying exhibits will be available for public inspection at each of the following locations:

Yuma County Airport Authority, 2191 E. 32nd Street, Suite 218, Yuma, Arizona 85365.

Office of the Executive Secretary, Foreign–Trade Zones Board, U.S. Department of Commerce, Room 2111, 1401 Constitution Ave. NW, Washington, DC 20230.

For further information, contact Elizabeth Whiteman at Elizabeth_Whiteman@ita.doc.gov or (202) 482–0473.

Dated: September 28, 2007.

Andrew McGilvray,

Executive Secretary.

[FR Doc. E7–19824 Filed 10–5–07; 8:45 am]

BILLING CODE 3510–DS–S

DEPARTMENT OF COMMERCE

International Trade Administration

(A–570–848)

Freshwater Crawfish Tail Meat From the People's Republic of China: Preliminary Results and Partial Rescission of the 2005–2006 Antidumping Duty Administrative Review and Preliminary Intent to Rescind 2005–2006 New Shipper Reviews

AGENCY: Import Administration, International Trade Administration, Department of Commerce.

SUMMARY: In response to timely requests from four exporters and the petitioner,[1] the Department of Commerce (the Department) is conducting the 2005–2006 administrative review of the antidumping duty order on freshwater crawfish tail meat from the People's Republic of China (PRC). In addition, in response to requests from four new shippers, the Department is also concurrently conducting 2005–2006 new shipper reviews of the above–referenced order. We have preliminarily determined that sales have been made below normal value (NV) by certain exporters participating in the administrative review. Also, we have preliminarily determined that none of the sales by the three new shippers currently under review are *bona fide* (one new shipper withdrew its request for review) and have preliminarily rescinded these reviews. If these preliminary results are adopted in our final results of these reviews, we will instruct U.S. Customs and Border Protection (CBP) to assess antidumping duties on entries of subject merchandise during the period of review (POR) for which the importer–specific assessment rates are above *de minimis*.

Interested parties are invited to comment on these preliminary results. We will issue the final results no later than 120 days from the date of publication of this notice.

EFFECTIVE DATE: October 9, 2007.

FOR FURTHER INFORMATION CONTACT: Melissa Blackledge or Jeff Pedersen, AD/CVD Operations, Office 4, Import Administration, International Trade Administration, U.S. Department of Commerce, 14th Street and Constitution Avenue, NW, Washington, DC 20230; telephone: (202) 482–3518 and (202) 482–2769, respectively.

SUPPLEMENTARY INFORMATION:

Background

On September 15, 1997, the Department published an amended final determination and antidumping duty order on freshwater crawfish tail meat from the PRC. *See Notice of Amendment to Final Determination of Sales at Less Than Fair Value and Antidumping Duty Order: Freshwater Crawfish Tail Meat From the People's Republic of China*, 62 FR 48218 (September 15, 1997). On September 1, 2006, the Department published a notice of opportunity to request an administrative review of the above–referenced order. *See Antidumping or Countervailing Duty Order, Finding, or Suspended Investigation; Opportunity to Request Administrative Review*, 71 FR 52061 (September 1, 2006). Based on timely requests for administrative reviews, the Department initiated administrative reviews of the antidumping duty order on freshwater crawfish tail meat from the PRC with respect to the following companies: China Kingdom Import & Export Co., Ltd. (aka Zhongda Import & Export Co., Ltd.) (China Kingdom), Anhui Tongxin Aquatic Product & Food Co., Ltd. (Anhui), Fujian Pelagic Fishery Group Co. (Fujian), Shanghai Strong International Trading Co., Ltd. (Shanghai Strong), Nanjing Merry Trading Co., Ltd. (Nanjing Merry), Qingdao Jinyongxiang Aquatic Foods Co., Ltd. (Qingdao JYX), Qingdao Wentai Trading Co., Ltd. (Qingdao Wentai), Weishan Zhenyu Foodstuff Co., Ltd. (Weishan Zhenyu), Weishan Hongrun Aquatic Food Co., Ltd. (Weishan Hongrun), Xuzhou Jinjiang Foodstuffs Co., Ltd. (Xuzhou), Yancheng Hi–King Agriculture Developing Co., Ltd. (Yancheng), Huoshan New Three–Gold Food Trade Co., Ltd. (Huoshan), Leping Lotai Foods Co., Ltd. (Leping), and Xiping Opeck Food Co., Ltd. (Xiping Opeck). *See Initiation of Antidumping and Countervailing Duty Administrative Reviews*, 71 FR 63752 (October 31, 2006). The period covered by these reviews is September 1, 2005, through August 31, 2006.

Additionally, based on timely requests for new shipper reviews, on October 23, 2006, the Department initiated new shipper reviews of Anhui, Huoshan, Jingdezhen Garay Foods Co., Ltd (Jingdezhen) and Shanghai Now Again International Trading Co., Ltd (Shanghai Now Again) covering the period September 1, 2005, through August 31, 2006. *See Freshwater Crawfish Tail Meat From the People's Republic of China: Initiation of Antidumping Duty New Shipper Reviews*, 71 FR 63284 (October 30, 2006). In accordance with 19 CFR 351.214(j)(3), each of the new shippers agreed to waive the applicable time limits for their new shipper reviews so that the Department could conduct the new shipper reviews concurrently with the 2005–2006 administrative review (*see* Shanghai Now Again's and Jingdezhen's November 30, 2006, submission, Huoshan's December 7, 2006, and Anhui's January 3, 2007, submission). *See Freshwater Crawfish Tail Meat From the People's Republic of China: Notice of Postponement of Time Limits for New Shipper Antidumping Duty Reviews in Conjunction With Administrative Review*, 72 FR 13744 (March 23, 2007).

On November 1, 2006, the Department issued a quantity and value questionnaire to all respondents for which an administrative review was initiated. The Department received responses to the quantity and value questionnaire from the following companies: Xiping Opeck (November 14, 2006), Xuzhou (November 15, 2006), Anhui (November 15, 2006), Huoshan (January 10, 2006), Qingdao JYX (November 9, 2006), Qingdao Wentai (November 15, 2006), China Kingdom (November 29, 2006), Weishan Hongrun (November 30, 2006), Huoshan (January 17, 2007) and Yancheng (November 15, 2006). In response to the quantity and value questionnaire, Qingdao JYX, Qingdao Wentai, China Kingdom, and Yancheng reported that they had no sales, entries or exports of subject merchandise during the POR. Anhui, Huoshan, and Weishan Hongrun noted in their responses to the quantity and value questionnaire that they had reported all of their subject merchandise sales that were made during the POR in

[1] The petitioner is the Crawfish Processors Alliance.

submissions filed in their respective new shipper reviews.

On October 30, 2006, the Department issued antidumping duty questionnaires to the four new shippers: Shanghai Now Again, Huoshan, Jingdezhen, and Anhui. On December 11, 2006, the Department issued antidumping duty questionnaires to Xiping Opeck and Xuzhou, the only non–new shippers reporting sales for which an administrative review was requested. We received timely questionnaire responses from the new shippers in November and December 2006, and January 2007. We issued supplemental questionnaires to, and received responses from, the new shippers from December 2006 to May 2007. Xiping Opeck and Xuzhou submitted responses to the Department's questionnaires in January and February 2007. We issued supplemental questionnaires to, and received responses from, Xuzhou and Xiping Opeck from February to August 2007.

On December 11, 2006, the Department provided parties with an opportunity to submit publicly available information on surrogate countries and values for consideration in these preliminary results. While no parties submitted surrogate values, on December 27, 2006, and again on March 1, 2007, the petitioner argued that the Department should continue, as in prior reviews, to use India as the primary surrogate country, while relying, where appropriate, on Spanish import statistics for the surrogate value for live crawfish.

On March 30, 2007, June 6, 2007, June 12, 2007, and June 18, 2007, the Department placed memoranda on the record regarding potentially unreported subject merchandise sales made by Xuzhou.[2] Xuzhou commented on these memoranda on April 12, 2007, and July 6, 2007.

On November 15, 2006, Weishan Zhenyu withdrew its request for an administrative review pursuant to 19 CFR 351.213(d)(1).

On January 29, 2007, the petitioner withdrew its request for an administrative review of Qingdao JYX, Qingdao Wentai, China Kingdom, Fujian, Leping, Nanjing Merry, and Shanghai Strong pursuant to 19 CFR 351.213(d)(1).

On March 23, 2007, Shanghai Now Again withdrew its request for a new shipper review. Although Shanghai Now Again withdrew its request after the 60–day deadline, we found it reasonable to accept its withdrawal because the Department had not yet committed significant resources to the new shipper review of Shanghai Now Again. Further, no party opposed Shanghai Now Again's withdrawal. Therefore, on August 6, 2007, the Department rescinded its review of Shanghai Now Again. *See Freshwater Crawfish Tail Meat from the People's Republic of China; Notice of Rescission of Antidumping Duty New Shipper Review*, 72 FR 43591 (August 6, 2007).

On September 5, 2007, the petitioner withdrew its request for an administrative review of Huoshan and Weishan Hongrun.

On May 30, 2007, the Department extended the deadline for the preliminary results of the administrative and new shipper reviews until October 1, 2007. *See Freshwater Crawfish Tail Meat from the People's Republic of China: Notice of Extension of Time Limit for the Preliminary Results of the 2005–2006 Antidumping Duty Administrative Review and New Shipper Reviews*, 72 FR 29970 (May 30, 2007).

Period of Review

The POR is September 1, 2005, through August 31, 2006.

Scope of Order

The product covered by this antidumping duty order is freshwater crawfish tail meat, in all its forms (whether washed or with fat on, whether purged or unpurged), grades, and sizes; whether frozen, fresh, or chilled; and regardless of how it is packed, preserved, or prepared. Excluded from the scope of the order are live crawfish and other whole crawfish, whether boiled, frozen, fresh, or chilled. Also excluded are saltwater crawfish of any type, and parts thereof. Freshwater crawfish tail meat is currently classifiable in the Harmonized Tariff Schedule of the United States (HTSUS) under item numbers 1605.40.10.10 and 1605.40.10.90, which are the new HTSUS numbers for prepared foodstuffs, indicating peeled crawfish tail meat and other, as introduced by CBP in 2000, and HTSUS numbers 0306.19.00.10 and 0306.29.00.00, which are reserved for fish and crustaceans in general. The HTSUS subheadings are provided for convenience and customs purposes only. The written description of the scope of this order is dispositive.

Final Partial Rescission of Administrative Review

Pursuant to 19 CFR 351.213(d)(1), the Secretary will rescind an administrative review if a party requesting a review withdraws the request within 90 days of the date of publication of the notice of initiation.[3] As noted above, on November 15, 2006, Weishan Zhenyu withdrew its request for an administrative review, in accordance with 19 CFR 351.213(d)(1). In addition, as noted above, pursuant to 19 CFR 351.213(d)(1), the petitioner withdrew its request for an administrative review of Qingdao JYX, Qingdao Wentai, China Kingdom, Fujian, Leping, Nanjing Merry, and Shanghai Strong on January 29, 2007, and withdrew its request for an administrative review of Weishan Hongrun and Huoshan on September 5, 2007. In accordance with 19 CFR 351.213(d)(1) and consistent with our practice, where the review requests were withdrawn within the 90–day time limit, we have rescinded the review because no other parties requested a review of these companies. Although the petitioner withdrew its request for a review of Weishan Hongrun and Huoshan after the 90–day deadline, we find it reasonable to extend the time limit for withdrawing the request because no other interested party requested a review of the companies and the companies' sales during the POR were already examined by the Department in new shipper reviews. Therefore, we are rescinding the administrative review of Weishan Zhenyu, Qingdao JYX, Qingdao Wentai, China Kingdom, Fujian, Leping, Nanjing Merry, Shanghai Strong, Weishan Hongrun, and Huoshan.

Preliminary Partial Rescission of Administrative Review

Yancheng informed the Department that it did not export the subject merchandise to the United States during the POR. Anhui reported that, aside from its sale that is under review in the concurrent new shipper review, it did not have any sales of subject merchandise during the POR. In our examination of CBP entry data, we did not find any information inconsistent with these statements. Further, in response to our request for information relating to these claims, CBP did not provide any information that contradicted the respondents' claims. Lastly, as discussed below, the

[2] *See* Memorandum to All Interested Parties Regarding Entry Documents of Xuzhou Jinjiang Foodstuffs Co., Ltd. (March 30, 2007), Memorandum For The File regarding Phone Conversation with the U.S. Customs and Border Protection (June 6, 2007), Memorandum For The File regarding Information Obtained from the Food and Drug Administration (June 12, 2007), and Memorandum For The File regarding Entry Data Obtained from the U.S. Customs and Border Protection's Database (June 18, 2007).

[3] The Department may extend this time limit if it is reasonable to do so. *See* 19 CFR 351.213(d)(1).

Department has preliminarily found Anhui's one sale during the POR to be non–*bona fide*. Therefore, because the record indicates that Yancheng did not sell subject merchandise to the United States during the POR, and Anhui did not make any *bona fide* sales of subject merchandise to the United States during the POR, we are preliminarily rescinding the instant administrative review with respect to Yancheng and Anhui. *See* 19 CFR 351.213(d)(3).

Preliminary Rescission of New Shipper Reviews

The Department has preliminarily determined that the sales made by Anhui, Jingdezhen, and Huoshan, which are under examination in the new shipper reviews, are not *bona fide* sales because: (1) the sales were made at artificially high prices that are not commercially reasonable; (2) the sales quantities are atypical compared to data on other imports of crawfish tail meat into the U.S. market; and, (3) there are other atypical aspects of the sales. Due to the proprietary nature of the information discussed in our *bona fide* sales analysis, please see the separate memoranda addressing this issue for details.[4] Because the Department has found the sales by Anhui, Jingdezhen, and Huoshan to be non–*bona fide*, there are no sales to review. Therefore, the Department is preliminarily rescinding the new shipper reviews of these companies. *See, e.g., Tianjin Tiancheng Pharmaceutical Co., Ltd. v. United States*, 366 F. Supp. 2d 1246, 1249 (CIT 2005).

Non–Market-Economy ("NME") Treatment

The Department considers the PRC to be an NME country. In accordance with section 771(18)(C)(i) of the Tariff Act of 1930, as amended (the Act), any determination that a country is an NME country shall remain in effect until revoked by the administering authority. See Tapered Roller Bearings and Parts Thereof, Finished and Unfinished, (TRBs) From the People's Republic of China: Preliminary Results of 2001–2002 Administrative Review and Partial Rescission of Review, 68 FR 7500 (February 14, 2003), (unchanged in TRBs from the People's Republic of China: Final Results of 2001–2002 Administrative Review and Partial Rescission of Review, 68 FR 70488 (December 18, 2003)). None of the parties to this proceeding has contested such treatment. Therefore, in these preliminary results of review, we have treated the PRC as an NME country and applied our current NME methodology in accordance with section 773(c) of the Act.

Selection of a Surrogate Country

In antidumping proceedings involving NME countries, the Department, pursuant to section 773(c)(1) of the Act, will generally base NV on the value of the NME producer's factors of production (FOPs). In accordance with section 773(c)(4) of the Act, in valuing the FOPs, the Department shall utilize, to the extent possible, the prices or costs of FOPs in one or more market–economy countries that are at a level of economic development comparable to that of the NME country and are significant producers of merchandise comparable to the subject merchandise.

The Department has determined that India, Sri Lanka, Egypt, Indonesia, and the Philippines are countries that are at a level of economic development comparable to that of the PRC. *See* memorandum regarding "Administrative Review of Freshwater Crawfish Tail Meat From the People's Republic of China: Request for a List of Surrogate Countries," dated December 1, 2006. While none of these countries are significant producers of crawfish tail meat,[5] India does have a seafood processing industry that is comparable to the crawfish industry with respect to factory overhead, selling, general, and administrative (SG&A) expenses, and profit. Therefore, we selected India as the primary surrogate country in which to value all inputs with the exception of whole live crawfish (the primary input) and the by–product, crawfish scrap shell. *See* Surrogate Country Memorandum at 4. Because we have determined that other forms of seafood are not sufficiently comparable to crawfish to serve as surrogates for the primary input, and India does not have a crawfish industry, we have looked to countries other than India for a crawfish input value. As was done in prior segments of this proceeding, we have selected Spain as the surrogate country in which to value whole live crawfish because Spain is a significant producer of comparable merchandise, *i.e.*, whole crawfish, and there are publicly available import statistics for Spain that are contemporaneous with the POR. *See* Surrogate Country Memorandum and *Freshwater Crawfish Tail Meat from the People's Republic of China; Notice of Final Results of Antidumping Duty Administrative Review, and Final Partial Rescission of Antidumping Duty Administrative Review*, 67 FR 19546 (April 22, 2002) (*1999–2000 Final Results*).

We have selected Indonesia as the surrogate country in which to value the crawfish scrap shell because Indonesia is at a level of economic development comparable to the PRC, it has significant production of merchandise comparable to the by–product scrap, and has publicly available data (*i.e.*, a public price quote from an Indonesian company) that has been used in prior segments of this proceeding.[6] The petitioner submitted comments supporting the use of India and Spain as surrogate countries. No other parties commented on surrogate country selection. For further discussion, *see* Surrogate Country Memorandum.

Separate Rates

In proceedings involving NME countries, the Department has a rebuttable presumption that all companies within the country are subject to government control and thus should be assessed a single antidumping duty rate. It is the Department's policy to assign all exporters of merchandise subject to investigation involving an NME country this single rate unless an exporter can demonstrate that it is

[4] *See* Memorandum to Stephen J. Claeys, Deputy Assistant Secretary For Import Administration from Abdelali Elouaradia, Director, Office 4 Import Administration, regarding *Bona Fide* Sales Analysis and Intent to Rescind the Review with Respect to Anhui Tongxin Aquatic Product & Food Co., Ltd. (dated concurrently with this notice), and Memorandum to Stephen J. Claeys, Deputy Assistant Secretary For Import Administration from Abdelali Elouaradia, Director, Office 4 Import Administration, regarding *Bona Fide* Sales Analysis and Intent to Rescind the Review with Respect to Houshan New Three-Gold Food Trade Co., Ltd. (dated concurrently with this notice), and Memorandum to Stephen J. Claeys, Deputy Assistant Secretary For Import Administration from Abdelali Elouaradia, Director, Office 4 Import Administration, regarding *Bona Fide* Sales Analysis and Intent to Rescind the Review with Respect to Jingdezhen Garay Foods Co., Ltd (dated concurrently with this notice).

[5] *See* Memorandum to Abdelali Elouaradia, Office Director, AD/CVD Operations, Office 4, through Howard Smith, Program Manager, AD/CVD Operations, Office 4, from Jeff Pedersen, International Trade Compliance Specialist, AD/CVD Operations, Office 4, regarding Administrative and New Shipper Reviews of Freshwater Crawfish Tail Meat from the People's Republic of China: Selection of a Surrogate Country (dated concurrently with this notice) (Surrogate Country Memorandum).

[6] *See* Memorandum to Barbara E. Tillman from Christian Hughes and Adina Teodorescu through Maureen Flannery re: Surrogate Valuation of Shell Scrap: Freshwater Crawfish Tail Meat from the People's Republic of China, Administrative Review 9/1/00-8/31/01 and New Shipper Reviews 9/1/00-8/31/01 and 9/1/00-10/15/01 (August 5, 2002), which was placed on the record of this review. *See* Memorandum to the File, through Howard Smith, Program Manager, AD/CVD Operations, Office 4, from Melissa Blackledge, Case Analyst, AD/CVD Operations, Office 4, regarding 2005-2006 Administrative and New Shipper Reviews of Freshwater Crawfish Tail Meat from the People's Republic of China: Factor Valuation (dated concurrently with this notice) (Factor Value Memorandum).

sufficiently independent so as to be entitled to a separate rate. The Department's separate–rate test is not concerned, in general, with macroeconomic/border–type controls, *e.g.*, export licenses, quotas, and minimum export prices, particularly if these controls are imposed to prevent dumping. *See Notice of Final Determination of Sales at Less Than Fair Value: Certain Preserved Mushrooms from the People's Republic of China*, 63 FR 72255, 72256 (December 31, 1998). The test focuses, rather, on controls over the investment, pricing, and output decision–making process at the individual firm level. *See Notice of Final Determination of Sales at Less than Fair Value: Certain Cut–to-Length Carbon Steel Plate From Ukraine*, 62 FR 61754, 61758 (November 19, 1997), and *Tapered Roller Bearings and Parts Thereof, Finished and Unfinished, From the People's Republic of China; Final Results of Antidumping Administrative Review*, 62 FR 61276, 61279 (November 17, 1997).

To establish whether a firm is sufficiently independent from government control of its export activities to be entitled to a separate rate, the Department analyzes each entity exporting the subject merchandise under a test arising from the *Notice of Final Determination of Sales at Less Than Fair Value: Sparklers from the People's Republic of China*, 56 FR 20588 (May 6, 1991) (''*Sparklers*''), as further developed in *Notice of Final Determination of Sales at Less Than Fair Value: Silicon Carbide from the People's Republic of China*, 59 FR 22585 (May 2, 1994) (''*Silicon Carbide*''). In accordance with the separate–rates criteria, the Department assigns separate rates in NME cases only if respondents can demonstrate the absence of both *de jure* and *de facto* governmental control over export activities.

Absence of De jure Control

The Department considers the following *de jure* criteria in determining whether an individual company may be granted a separate rate: (1) an absence of restrictive stipulations associated with an individual exporter's business and export licenses; (2) any legislative enactments decentralizing control of companies; and (3) other formal measures by the government decentralizing control of companies. *See Sparklers*, 56 FR at 20589.

Xiping Opeck and Xuzhou stated that they are independent legal entities and provided copies of their business license which allows each company to engage in the exportation of freshwater crawfish tail meat. Xiping Opeck and Xuzhou also reported that no export quotas apply to crawfish. Prior verifications have confirmed that there are no commodity–specific export licenses required and no quotas for the seafood category ''Other,'' which includes crawfish, in *China's Tariff and Non–Tariff Handbook* for 1996. In addition, we have previously confirmed that freshwater crawfish tail meat is not on the list of commodities with planned quotas in the 1992 PRC Ministry of Foreign Trade and Economic Cooperation document entitled Temporary Provisions for Administration of Export Commodities. *See Freshwater Crawfish Tail Meat From The People's Republic of China; Preliminary Results of New Shipper Review*, 64 FR 8543 (February 22, 1999), and *Freshwater Crawfish Tail Meat From the People's Republic of China; Final Results of New Shipper Review*, 64 FR 27961 (May 24, 1999). We found no evidence of *de jure* governmental control over Xiping Opeck's or Xuzhou's exportation of freshwater crawfish tail meat.

The following laws, which were placed on the record of this review, also indicate a lack of *de jure* government control. The *Company Law of the People's Republic of China*, made effective on July 1, 1994, states that a company is an enterprise legal person, that shareholders shall assume liability towards the company to the extent of their shareholdings and that the company shall be liable for its debts to the extent of all its assets. Xiping Opeck and Xuzhou also provided copies of the *Foreign Trade Law of the PRC*, which identifies the rights and responsibilities of organizations engaged in foreign trade, grants autonomy to foreign–trade operators in management decisions and establishes the foreign trade operator's accountability for profits and losses. Based on the foregoing, the Department has preliminarily determined that there is an absence of *de jure* governmental control over the export activities of Xiping Opeck and Xuzhou.

Absence of De facto Control

Typically the Department considers four factors in evaluating whether each respondent is subject to *de facto* governmental control of its export functions: (1) whether the export prices are set by, or are subject to the approval of, a governmental agency; (2) whether the respondent has authority to negotiate and sign contracts and other agreements; (3) whether the respondent has autonomy from the government in making decisions regarding the selection of management; and (4) whether the respondent retains the proceeds of its export sales and makes independent decisions regarding disposition of profits or financing of losses. *See Silicon Carbide*, 59 FR at 22586–87; *see also Notice of Final Determination of Sales at Less Than Fair Value: Furfuryl Alcohol From the People's Republic of China*, 60 FR 22544, 22545 (May 8, 1995). The Department considers an analysis of *de facto* control to be critical in determining whether a respondent is, in fact, subject to a degree of governmental control that would preclude the Department from assigning the respondent a separate rate.

Xiping Opeck and Xuzhou have each asserted that it: (1) establishes its own export prices; (2) negotiates contracts without guidance from any governmental entities or organizations; (3) makes its own personnel decisions; and (4) retains the proceeds of its export sales, uses profits according to its business needs, and has the authority to sell its assets and to obtain loans. Based upon the record information, the Department has preliminarily determined that there is an absence of *de facto* governmental control over the export activities of Xiping Opeck and Xuzhou. Because the Department has found that Xiping Opeck and Xuzhou operate free of *de jure* and *de facto* governmental control, it has preliminarily determined that Xiping Opeck and Xuzhou have satisfied the criteria for separate rates.

Use of Facts Available

Section 776(a)(2) of the Act, provides that, if necessary information is not available on the record or an interested party: (A) withholds information that has been requested by the Department; (B) fails to provide such information in a timely manner or in the form or manner requested subject to section 782(c)(1) and (e) of the Act; (C) significantly impedes a proceeding under the antidumping statute; or (D) provides such information but the information cannot be verified, the Department shall, subject to subsection 782(d) of the Act, use facts otherwise available in reaching the applicable determination.

Section 782(d) of the Act provides that, if the Department determines that a response to a request for information does not comply with the request, the Department will inform the person submitting the response of the nature of the deficiency and shall, to the extent practicable, provide that person the opportunity to remedy or explain the deficiency. If that person submits further information that continues to be unsatisfactory, or this information is not submitted within the applicable time

limits, the Department may, subject to section 782(e), disregard all or part of the original and subsequent responses, as appropriate.

Section 782(e) of the Act states that the Department shall not decline to consider information deemed ''deficient'' under section 782(d) if: (1) the information is submitted by the established deadline; (2) the information can be verified; (3) the information is not so incomplete that it cannot serve as a reliable basis for reaching the applicable determination; (4) the interested party has demonstrated that it acted to the best of its ability; and (5) the information can be used without undue difficulties.

The Department's quantity and value questionnaire, as well as sections A and C of the antidumping questionnaire, requested that Xuzhou report each of its U.S. sales of subject merchandise that were made during the POR.[7] Xuzhou reported certain sales of subject merchandise during the POR,[8] however, substantial record evidence indicates that Xuzhou made additional, unreported sales of subject merchandise. Due to the proprietary nature of this record evidence, our analysis of the evidence is contained in a separate memorandum.[9]

Pursuant to section 782(d) of the Act, the Department provided Xuzhou with numerous opportunities to fully report all of its U.S. POR sales of subject merchandise. On January 30, 2007, the Department asked Xuzhou whether it had reported all sales of subject merchandise during the POR; [10]on February 12, 2007, the Department requested that Xuzhou provide all of the commercial invoices for, and demonstrate how it recorded the sales of, all subject merchandise sold during the POR;[11] and on February 22, 2007, the Department requested that Xuzhou list all crawfish products sold to the United States during the POR.[12] Xuzhou did not identify the unreported sales in its responses to these requests.

After we obtained information regarding entries of Xuzhou's crawfish products from CBP and the U.S. Food and Drug Administration, we placed that information on the record and provided Xuzhou with an opportunity to explain the discrepancy between its responses and this information.[13] For the reasons outlined in the Facts Available Memorandum, we found Xuzhou's explanations to be unsatisfactory and inconsistent with certain record information.

Because the information necessary to calculate a margin for Xuzhou's sales of subject merchandise is not on the record and because it is Xuzhou that withheld this information, we have concluded that it is appropriate to base Xuzhou's dumping margin on facts available. Pursuant to section 782(d) of the Act, the Department provided Xuzhou with several opportunities to correct its deficient responses, but it failed to do so. Given the significant quantity of unreported sales and Xuzhou's unsatisfactory explanations regarding its reporting failures, we find that the information provided by Xuzhou cannot serve as a reliable basis for reaching a preliminary ruling with respect to Xuzhou, within the meaning of section 782(e)(3) of the Act. Moreover, Xuzhou's failure to provide the requested information required the Department to expend significant resources to determine whether Xuzhou reported all sales of subject merchandise during the POR, thus impeding this proceeding. Furthermore, Xuzhou's failure to report all of the requested U.S. sales of subject merchandise prevented the Department from calculating an accurate dumping margin for the company. Therefore, pursuant to sections 776(a)(1) (necessary information is not on the record) and 776(a)(2)(A) and (C) of the Act (withholding requested information and significantly impeding the proceeding), we have based Xuzhou's preliminary dumping margin on facts otherwise available.

Use of Adverse Inferences

Once the Department determines that the use of facts available is warranted, section 776(b) of the Act permits the Department to apply an adverse inference if it makes the additional finding that ''an interested party has failed to cooperate by not acting to the best of its ability to comply with a request for information.'' To examine whether the respondent ''cooperated'' by ''acting to the best of its ability'' under section 776(b) of the Act, the Department considers, *inter alia*, the accuracy and completeness of submitted information and whether the respondent has hindered the calculation of accurate dumping margins. *See, e.g., Certain Welded Carbon Steel Pipes and Tubes From Thailand: Final Results of Antidumping Duty Administrative Review*, 62 FR 53808, 53819–53820 (October 16, 1997). In determining whether a party has cooperated to the best of its ability, ''Commerce must necessarily draw some inferences from a pattern of behavior.'' *See Borden, Inc. v. United States*, 1998 WL 895890 (CIT 1998) at 1. *See also* Statement of Administrative Action (SAA), H.R. Doc. 103–316 at 870 (1994). The Court of Appeals for the Federal Circuit (CAFC), in *Nippon Steel Corporation v. United States*, 337 F.3d 1373, 1380 (Fed. Cir. 2003) (*Nippon Steel*), provided an explanation of the ''failure to act to the best of its ability'' standard. Specifically, the CAFC held that the Department need not show intentional conduct existed on the part of the respondent, but merely that a ''failure to cooperate to the best of a respondent's ability'' existed, (*i.e.*, information was not provided ''under circumstances in which it is reasonable to conclude that less than full cooperation has been shown''). *See id.* The CAFC also noted that the test is ''the degree to which the respondent cooperates in investigating (its) records and in providing Commerce with the requested information.'' *See Nippon Steel*, 337 F.3d 1373, 1383.

Xuzhou's failure to report the U.S. sales at issue, despite the fact that it possessed the necessary records regarding these sales, indicates a lack of cooperation on its part. As demonstrated above, the Department provided Xuzhou with numerous opportunities to either submit the requested information or explain why it was unable to do so. Xuzhou did not report the sales in question or indicate that it lacked the records needed to report such sales. Moreover, Xuzhou's failure to report these sales results in a record that cannot serve as a reliable basis for calculating an accurate

[7] *See* the Department's November 1, 2006, quantity and value questionnaire and the December 11, 2006, section A and C questionnaires.

[8] *See* Xuzhou's November 15, 2006, quantity and value response, its January 16, 2007, section A response, and its January 31, 2007, section C response.

[9] *See* the memorandum filed concurrently with this notice titled Memorandum from Abdelali Elouaradia to Stephen J. Claeys Regarding Unreported Sales and the Use of Adverse Facts Available, dated concurrently with this notice (Facts Available Memorandum).

[10] *See* the Department's January 30, 2007, supplemental questionnaire at 3.

[11] *See* the Department's February 12, 2007, supplemental questionnaire at 1.

[12] *See* the Department's February 22, 2007, supplemental questionnaire at 1

[13] *See* the Department's March 30, 2007, memorandum to the file regarding ''Entry Documents of Xuzhou Jinjiang Foodstuffs Co., Ltd;'' *see also* the Department's June 6, 2007, memorandum to the file regarding ≥Phone Conversation with the U.S. Customs and Border Protection regarding entries . . . ; the Department's June 12, 2007, memorandum to the file regarding ''Information Obtained from the Food and Drug Administration;'' and the Department's June 18, 2007, memorandum to the file regarding ''Entry Data Obtained from the U.S. Customs and Border Protection's Database.''

dumping margin. Hence, the record shows a pattern of behavior on the part of Xuzhou which indicates that it did not cooperate to the best of its ability within the meaning of section 776(b) of the Act. Therefore, an adverse inference is warranted.

Selection of Adverse Facts Available Rate

In deciding which rate to use as adverse facts available (AFA), section 776(b) of the Act and 19 CFR 351.308(c)(1) authorize the Department to rely on information derived from (1) the petition, (2) a final determination in the investigation, (3) any previous review or determination, or (4) any information placed on the record. In reviews, the Department normally selects, as AFA, the highest rate determined for any respondent in any segment of the proceeding. *See, e.g., Freshwater Crawfish Tail Meat from the People's Republic of China: Notice of Final Results of Antidumping Duty Administrative Review*, 68 FR 19504 (April 21, 2003). The Court of International Trade (CIT) and the Federal Circuit have consistently upheld this practice. *See Rhone Poulenc, Inc. v. United States*, 899 F.2d 1185, 1190 (Fed. Circ. 1990) (*Rhone Poulenc*); *NSK Ltd. v. United States*, 346 F. Supp. 2d 1312, 1335 (CIT 2004) (upholding a 73.55 percent total AFA rate, the highest available dumping margin from a different respondent in the less than fair value investigation); *see also Kompass Food Trading Int'l v. United States*, 24 CIT 678, 689 (2000) (upholding a 51.16% total AFA rate, the highest available dumping margin from a different, fully cooperative respondent); and *Shanghai Taoen International Trading Co., Ltd. v. United States*, Slip Op. 05–22, at 16 (CIT 2005) (upholding a 223.01 percent total AFA rate, the highest available dumping margin from a different respondent in a previous administrative review). When selecting an adverse rate from among the possible sources of information, the Department's practice is to ensure that the rate is sufficiently adverse ''as to effectuate the purpose of the facts available role to induce respondents to provide the Department with complete and accurate information in a timely manner.'' *See Notice of Final Determination of Sales at Less than Fair Value: Static Random Access Memory Semiconductors From Taiwan*, 63 FR 8909, 8932 (February 23, 1998). The Department's practice also ensures ''that the party does not obtain a more favorable result by failing to cooperate than if it had cooperated fully.'' *See* SAA at 870; *see also Notice of Final Determination of Sales at Less Than Fair Value: Certain Frozen and Canned Warmwater Shrimp From Brazil*, 69 FR 76910 (December 23, 2004); *D&L Supply Co. v. United States*, 113 F.3d 1220, 1223 (Fed. Cir. 1997). In choosing the appropriate balance between providing respondents with an incentive to respond accurately, and imposing a rate that is reasonably related to the respondent's prior commercial activity, selecting the highest prior margin ''reflects a common sense inference that the highest prior margin is the most probative evidence of current margins, because, if it were not so, the importer, knowing of the rule, would have produced current information showing the margin to be less.'' *See Rhone Poulenc*, 899 F.2d at 1190. Consistent with the statute, court precedent, and its normal practice, the Department has selected 223.01 percent as the AFA rate, the highest calculated rate on the record of this proceeding. *See, e.g., 1999–2000 Final Results*. We have corroborated this rate as explained below.

Corroboration of Secondary Information

Section 776(c) of the Act requires that the Department, to the extent practicable, corroborate secondary information from independent sources that are reasonably at its disposal. Secondary information is defined as ''{i}nformation derived from the petition that gave rise to the investigation or review, the final determination concerning the subject merchandise, or any previous review under section 751 concerning the subject merchandise.'' *See* SAA at 870. The SAA clarifies that ''corroborate'' means that the Department will satisfy itself that the secondary information to be used has probative value. *See* SAA at 870. As noted in *F.Lii de Cecco di Filippo Fara S. Martino, S.p.A. v. United States*, 216 F.3d 1027, 1030 (2000), to corroborate secondary information, the Department will, to the extent practicable, examine the reliability and relevance of the information. *See also Tapered Roller Bearings and Parts Thereof, Finished and Unfinished, from Japan, and Tapered Roller Bearings, Four Inches or Less in Outside Diameter, and Components Thereof, From Japan; Preliminary Results of Antidumping Duty Administrative Reviews and Partial Termination of Administrative Reviews*, 61 FR 57391, 57392 (November 6, 1996) (unchanged in *Tapered Roller Bearings and Parts Thereof, Finished and Unfinished, From Japan, and Tapered Roller Bearings, Four Inches or Less in Outside Diameter, and Components Thereof, From Japan; Final Results of Antidumping Duty Administrative Reviews and Termination in Part*, 62 FR 11825 (March 13, 1997)). According to the SAA, independent sources used to corroborate secondary information may include, for example, published price lists, official import statistics and customs data, and information obtained from interested parties during the particular investigation. *See Notice of Preliminary Determination of Sales at Less Than Fair Value: High and Ultra–High Voltage Ceramic Station Post Insulators from Japan*, 68 FR 35627 (June 16, 2003); and *Notice of Final Determination of Sales at Less Than Fair Value: Live Swine From Canada*, 70 FR 12181 (March 11, 2005).

The AFA rate selected in these preliminary results constitutes secondary information. However, unlike other types of secondary information, such as input costs or selling expenses, there are no independent sources of information from which the Department can derive calculated dumping margins; the only source for dumping margins is administrative determinations. The rate that we are using as AFA is reliable because it was calculated in the 1999–2000 antidumping duty administrative review in this proceeding using respondent data that were accepted by the Department and surrogate values that were selected by the Department. *See 1999–2000 Final Results*. This rate has been used as an AFA rate in every segment of this proceeding since the 1999–2000 antidumping duty administrative review and the Department has received no information that warrants revisiting the issue of its reliability.

With respect relevancy, the Department will consider information reasonably at its disposal to determine whether a dumping margin continues to have relevance. Where circumstances indicate that the selected dumping margin is not appropriate as AFA, the Department will disregard the dumping margin and determine an appropriate dumping margin. For example, in *Fresh Cut Flowers From Mexico: Final Results of Antidumping Duty Administrative Review*, 61 FR 6812 (February 22, 1996), the Department did not use the highest dumping margin in that case as adverse best information available (the predecessor to facts available) because the dumping margin was based on another company's uncharacteristic business expense resulting in an unusually high dumping margin. Similarly, the Department does not apply a dumping margin that has been discredited. *See D&L Supply Co. v. United States*, 113 F.3d at 1221 (the

Department will not use a dumping margin that has been judicially invalidated).

None of these unusual circumstances are present here. As noted above, the rate that we are using as AFA is based on data from a PRC company in the crawfish industry. These data were accepted by the Department in a prior segment of this proceeding. Moreover, the rate that we are using as AFA is based on surrogate values selected by the Department. Therefore, we consider the 223.01 percent rate (which is the current PRC–wide rate) to be the most probative evidence of the uncooperative respondent's current dumping margin. In addition, however, the Department examined other available information to further demonstrate the relevance of this rate to Xuzhou. Because this data consists of business proprietary information, the Department's analysis is contained in the Facts Available Memorandum.

Fair Value Comparisons

To determine whether Xiping Opeck's sales of subject merchandise to the United States were made at prices below NV, we compared the export price (EP) of the sales to NV, as described in the ''United States Price'' and ''Normal Value'' sections of this notice.

United States Price

In accordance with section 772(a) of the Act, we based Xiping Opeck's U.S. price on EP because the first sales to unaffiliated purchasers were made prior to importation, and constructed export price was not otherwise warranted by the facts on the record. In accordance with section 772(c) of the Act, we calculated EP by deducting, where applicable, the following expenses from the starting price (gross unit price) charged to the first unaffiliated customer in the United States:

Foreign inland freight, foreign brokerage and handling expenses, ocean freight, and inland freight incurred in the United States. We based all movement expenses on surrogate values because a PRC company either provided the service or Xiping Opeck paid for the service in renminbi (RMB) (*see* the ''NV'' section of this notice for further details).

Normal Value

Section 773(c)(1) of the Act provides that the Department shall determine NV using an FOP methodology if the merchandise is exported from an NME country and the available information does not permit the calculation of NV using home–market prices, third–country prices, or constructed value under section 773(a) of the Act and 19 CFR 351.408. The Department uses an FOP methodology because the presence of government controls on various aspects of NMEs renders price comparisons and the calculation of production costs invalid under its normal methodologies. *See Tapered Roller Bearings and Parts Thereof, Finished or Unfinished, From the People's Republic of China: Preliminary Results of Antidumping Duty Administrative Review and Notice of Intent to Rescind in Part*, 70 FR 39744 (July 11, 2005) (unchanged in *Tapered Roller Bearings and Parts Thereof, Finished and Unfinished, from the People's Republic of China: Final Results of 2003–2004 Administrative Review and Partial Rescission of Review*, 71 FR 2517 (January 17, 2006)). Thus, we calculated NV by adding together the value of the FOPs, general expenses, profit, and packing costs.[14] Specifically, we valued material, labor, energy, and packing by multiplying the amount of the factor consumed in producing subject merchandise by the average unit surrogate value of the factor. In addition, we added freight costs to the surrogate costs that we calculated for material inputs. We calculated freight costs by multiplying surrogate freight rates by the shorter of the reported distance from the domestic supplier to the factory that produced the subject merchandise or the distance from the nearest seaport to the factory that produced the subject merchandise, as appropriate. This adjustment is in accordance with the CAFC's decision in *Sigma Corp. v. United States*, 117 F.3d 1401, 1407–1408 (Fed. Cir. 1997). We increased the calculated costs of the FOPs for surrogate general expenses and profit. *See* Factor Value Memorandum.

Selected Surrogate Values

In selecting surrogate values, we followed, to the extent practicable, the Department's practice of choosing public values which are non–export averages, representative of a range of prices in effect during the POR, or over a period as close as possible in time to the POR, product–specific, and tax–exclusive. *See e.g., Notice of Preliminary Determination of Sales at Less Than Fair Value, Negative Preliminary Determination of Critical Circumstances and Postponement of Final Determination: Certain Frozen and Canned Warmwater Shrimp From the Socialist Republic of Vietnam*, 69 FR 42672, 42682 (July 16, 2004), unchanged in *Final Determination of Sales at Less Than Fair Value: Certain Frozen and Canned Warmwater Shrimp From the Socialist Republic of Vietnam*, 69 FR 71005 (December 8, 2004). We also considered the quality of the source of surrogate information in selecting surrogate values. *See Manganese Metal From the People's Republic of China; Final Results and Partial Rescission of Antidumping Duty Administrative Review*, 63 FR 12440 (March 13, 1998). Where we could only obtain surrogate values that were not contemporaneous with the POR, we inflated (or deflated) the surrogate values using, where appropriate, the Indian Wholesale Price Index (WPI) as published in the *International Financial Statistics* of the International Monetary Fund. *See* Factor Value Memorandum.

In calculating surrogate values from import statistics, in accordance with the Department's practice, we disregarded statistics for imports from NME countries and countries deemed to maintain broadly available, non–industry-specific subsidies which may benefit all exporters to all export markets (*i.e.*, Indonesia, South Korea, and Thailand). *See, e.g., Final Determination of Sales at Less Than Fair Value: Certain Automotive Replacement Glass Windshields From The People's Republic of China*, 67 FR 6482 (February 12, 2002) and accompanying Issues and Decision Memorandum at Comment 1. *See also Notice of Preliminary Determination of Sales at Less Than Fair Value, Postponement of Final Determination, and Affirmative Preliminary Determination of Critical Circumstances: Certain Color Television Receivers From the People's Republic of China*, 68 FR 66800, 66808 (November 28, 2003), unchanged in Notice of Final Determination of Sales at Less Than Fair Value and Negative Final Determination of Critical Circumstances: Certain Color Television Receivers From the People's Republic of China, 69 FR 20594 (April 16, 2004). Additionally, we excluded from our calculations imports that were labeled as originating from an unspecified country because we could not determine whether they were from an NME country.

We used the following surrogate values in our preliminary results of review (*see* Factor Value Memorandum for details). Except as noted below, we valued raw and packing materials using September 2005–August 2006 weighted–average Indian import values derived from the *World Trade Atlas* online (*WTA*). The Indian import statistics that we obtained from the *WTA* were published by the DGCI&S,

[14] We based the values of the FOPs on surrogate values (*see* ''Selected Surrogate Values'' section below).

Ministry of Commerce of India and are contemporaneous with the POR. We valued whole live crawfish using publicly available data for Spanish imports of whole live crawfish from Portugal. We obtained the data from ''aduanas e I. especiales,'' the Spanish Customs database for foreign trade statistics (Estadisticas Comercio Exterior). We valued the crawfish shell scrap by–product using a price quote from Indonesia for wet crab and shrimp shells. We valued diesel fuel using the rates provided by the OECD's International Energy Agency's publication: *Key World Energy Statistics 2005* from the first quarter of 2005. Because these data are not contemporaneous with the POR, we inflated the values using the WPI. We valued water using data from the Maharashtra Industrial Development Corporation (www.midcindia.org) because this source includes a wide range of industrial water tariffs. Specifically, this source provides 386 industrial water rates within the Maharashtra province from June 2003; 193 for the ''inside industrial areas'' usage category and 193 for the ''outside industrial areas'' usage category. Because the water value rates are not contemporaneous with the POR, we inflated the surrogate value for water using the WPI. We valued non–refrigerated truck freight expenses using a per kilometer per kilogram average rate obtained from the web site of an Indian transportation company, InFreight Technologies India Limited. *See* http://www.infreight.com. We valued refrigerated truck freight expenses based on price quotations from CTC Freight Carriers of Delhi, India, placed on the record of the antidumping investigation of Certain Frozen Warmwater Shrimp from the PRC. The Department has placed that information on the record of this proceeding.

We used two sources to calculate the surrogate value for domestic brokerage and handling expenses. We averaged publicly available brokerage and handling data reported by Essar Steel in the antidumping duty administrative review of hot–rolled carbon steel flat products from India with publicly available brokerage and handling data reported by Agro Dutch Industries Limited (Agro Dutch) in the antidumping duty administrative review of certain preserved mushrooms from India. *See Certain Hot–Rolled Carbon Steel Flat Products From India: Preliminary Results of Antidumping Duty Administrative Review*, 71 FR 2018, 2022 (January 12, 2006) (Essar Steel's February 28, 2005, submission) (unchanged in *Certain Hot–Rolled Carbon Steel Flat Products From India: Final Results of Antidumping Duty Administrative Review*, 71 FR 40694 (July 18, 2006)); *see also Certain Preserved Mushrooms From India: Final Results of Antidumping Duty Administrative Review*, 70 FR 37757 (June 30, 2005) (Agro Dutch's May 24, 2005, submission).

We valued international freight expenses using freight quotes from Maersk Sealand, a market–economy shipper. These quotes have been used in prior antidumping duty administrative reviews of this case. *See Freshwater Crawfish Tail Meat from the People's Republic of China; Notice of Final Results of Antidumping Duty Administrative Review and New Shipper Reviews, and Final Partial Rescission of Antidumping Duty Administrative Review*, 66 FR 20634 (April 24, 2001). We calculated a simple average of quotes for shipments from China to the United States occurring during the POR.

Consistent with 19 CFR 351.408(c)(3), we valued direct, indirect, and packing labor, using the most recently calculated regression–based wage rate, which relies on 2004 data. This wage rate can currently be found on the Department's website on Import Administration's home page, Import Library, Expected Wages of Selected NME Countries, revised in January 2007, available at http://ia.ita.doc.gov/wages/index.html. The source of these wage–rate data on the Import Administration's web site is the Yearbook of Labour Statistics, ILO, Chapter 5B: Wages in Manufacturing. Because this regression–based wage rate does not separate the labor rates into different skill levels or types of labor, we have applied the same wage rate to all skill levels and types of labor reported by Xiping Opeck.

Lastly, we valued SG&A expenses, factory overhead costs, and profit using the 2002–2003 financial statements of Nekkanti Sea Foods Ltd., an Indian seafood processor. *See* Factor Value Memorandum.

In accordance with 19 CFR 351.301(c)(3)(ii), interested parties may submit publicly available information with which to value FOPs in the final results of review within 20 days after the date of publication of the preliminary results of review.

Currency Conversion

We made currency conversions into U.S. dollars, in accordance with section 773A(a) of the Act, based on the exchange rates in effect on the dates of the U.S. sales as certified by the Federal Reserve Bank. These exchange rates can be accessed at the website of Import Administration at http://ia.ita.doc.gov/exchange/index.html.

Preliminary Results of Reviews

We preliminarily determine that the following margins exist for Xiping Opeck and Xuzhou during the period September 1, 2005, through August 31, 2006:

FRESHWATER CRAWFISH TAIL MEAT FROM THE PRC

Company	Weighted–Average Margin (Percent)
Xiping Opeck Food Co., Ltd.	13.61
Xuzhou Jinjiang Foodstuffs Co., Ltd.	223.01
PRC–Wide Rate	**Margin (Percent)**
PRC–Wide Rate	223.01

We will disclose the calculations used in our analysis to parties to these proceedings within five days of the date of publication of this notice.

Case briefs from interested parties may be submitted not later than 30 days of the date of publication of this notice, pursuant to 19 CFR 351.309(c). Rebuttal briefs, limited to issues raised in the case briefs, will be due five days later, pursuant to 19 CFR 351.309(d). Parties who submit case or rebuttal briefs in this proceeding are requested to submit with each argument (1) a statement of the issue and (2) a brief summary of the argument. Parties are also encouraged to provide a summary of the arguments not to exceed five pages and a table of statutes, regulations, and cases cited.

Any interested party may request a hearing within 30 days of publication of this notice. Interested parties who wish to request a hearing or to participate if one is requested, must submit a written request to the Assistant Secretary for Import Administration within 30 days of the date of publication of this notice. Requests should contain: (1) the party's name, address, and telephone number; (2) the number of participants; and (3) a list of issues to be discussed. *See* 19 CFR 351.310(c). Issues raised in the hearing will be limited to those raised in the briefs.

The Department will issue the final results of these reviews, including the results of its analysis of issues raised in any such written briefs or at the hearing, if held, not later than 120 days after the date of publication of this notice.

Assessment Rates

The Department shall determine, and CBP shall assess, antidumping duties on all appropriate entries. The Department will issue appropriate appraisement

instructions for the companies subject to these reviews directly to CBP 15 days after publication of the final results of these reviews. For assessment purposes for companies with a calculated rate, where possible, the Department calculated importer–specific assessment rates for freshwater crawfish tail meat from the PRC on a per–unit basis. Specifically, the Department divided the total dumping margins (calculated as the difference between normal value and export price) for each importer by the total quantity of subject merchandise sold to that importer during the POR to calculate a per–unit assessment amount. The Department will direct CBP to assess importer–specific assessment rates based on the resulting per–unit (i.e., per–kilogram) rates by the weight in kilograms of each entry of the subject merchandise during the POR. However, the final results of this review shall be the basis for the assessment of antidumping duties on entries of merchandise covered by the final results of these reviews and for future deposits of estimated duties, where applicable.

Cash Deposit Requirements

The following cash deposit requirements will be effective upon publication of the final results of these reviews for all shipments of the subject merchandise entered, or withdrawn from warehouse, for consumption on or after the publication date, as provided for by section 751(a)(2)(C) of the Act: (1) for the exporters listed above, the cash deposit rate will be that established in the final results of this review (except, if the rate is zero or *de minimis*, no cash deposit will be required); (2) for previously investigated or reviewed PRC and non–PRC exporters not listed above that have separate rates, the cash deposit rate will continue to be the exporter–specific rate published for the most recently completed review; (3) for all PRC exporters of subject merchandise which have not been found to be entitled to a separate rate, the cash deposit rate will be the PRC–wide rate of 223.01 percent; and (4) for all non–PRC exporters of subject merchandise which have not received their own rate, the cash deposit rate will be the rate applicable to the PRC exporters that supplied that non–PRC exporter. These deposit requirements, when imposed, shall remain in effect until further notice.

Notification to Importers

This notice serves as a preliminary reminder to importers of their responsibility under 19 CFR 351.402(f)(2) to file a certificate regarding the reimbursement of antidumping duties prior to liquidation of the relevant entries during this review period. Failure to comply with this requirement could result in the Secretary's presumption that reimbursement of antidumping duties occurred and the subsequent assessment of double antidumping duties.

These administrative and new shipper reviews and notice are in accordance with sections 751(a)(1), 751(a)(2)(B), and 777(i) of the Act and 19 CFR 351.213 and 351.214.

Dated: October 1, 2007.

David M. Spooner,

Assistant Secretary for Import Administration.

[FR Doc. E7–19817 Filed 10–5–02; 8:45 am]

Billing Code: 3510–DS–S

DEPARTMENT OF COMMERCE

International Trade Administration

[A–552–801]

Certain Frozen Fish Fillets from the Socialist Republic of Vietnam: Initiation of Antidumping Duty New Shipper Reviews

AGENCY: Import Administration, International Trade Administration, Department of Commerce.

EFFECTIVE DATE: October 9, 2007.

SUMMARY: The Department of Commerce (''Department'') has determined that two requests for a new shipper review of the antidumping duty order on certain frozen fish fillets from the Socialist Republic of Vietnam (''Vietnam''), received on June 15, 2007, and August 29, 2007, meet the statutory and regulatory requirements for initiation. The period of review (''POR'') for the two new shipper reviews which the Department is initiating is August 1, 2006, through July 31, 2007.

FOR FURTHER INFORMATION CONTACT: Javier Barrientos, AD/CVD Operations, Office 9, Import Administration, International Trade Administration, U.S. Department of Commerce, 14th Street and Constitution Avenue, N.W., Washington, D.C. 20230; telephone: (202) 482–2243.

SUPPLEMENTARY INFORMATION:

Background

The notice announcing the antidumping duty order on certain frozen fish fillets from Vietnam was published in the **Federal Register** on August 12, 2003. *See Notice of Antidumping Duty Order: Certain Frozen Fish Fillets from the Socialist Republic of Vietnam*, 68 FR 47909(August 12, 2003).[1] On June 15, and August 29, 2007, pursuant to 19 CFR 351.214(c), the Department received two new shipper review requests from Southern Fishery Industries Company, Ltd. (''South Vina'') and Binh An Seafood Joint Stock Co. (''Binh An''), respectively. South Vina and Binh An certified that they are both the producer and exporter of the subject merchandise upon which the request for a new shipper review is based. The Catfish Farmers of America and individual U.S. catfish processors (''Petitioners'') did not submit comments with regard to these two new shipper requests.

Pursuant to section 751(a)(2)(B)(i)(I) of the Tariff Act of 1930 as amended (''the Act''), and 19 CFR 351.214(b)(2)(i), South Vina and Binh An certified that they did not export certain frozen fish fillets to the United States during the period of investigation (''POI''). In addition, pursuant to section 751(a)(2)(B)(i)(II) of the Act and 19 CFR 351.214(b)(2)(iii)(A), South Vina and Binh An certified that, since the initiation of the investigation, they have never been affiliated with any Vietnamese exporter or producer who exported certain frozen fish fillets to the United States during the POI, including those not individually examined during the investigation. As required by 19 CFR 351.214(b)(2)(iii)(B), South Vina and Binh An also certified that their export activities were not controlled by the central government of Vietnam.

In addition to the certifications described above, pursuant to 19 CFR 351.214(b)(2)(iv), South Vina and Binh An submitted documentation establishing the following: (1) the date on which South Vina and Binh An first shipped certain frozen fish fillets for export to the United States and the date on which the frozen fish fillets were first entered, or withdrawn from warehouse, for consumption; (2) the volume of their first shipment;[2] and (3) the date of their first sale to an unaffiliated customer in the United States.

The Department conducted CBP database queries to confirm that South Vina and Binh An's shipments of subject merchandise had entered the United States for consumption and that liquidation of such entries had been

[1] Therefore, a request for a new shipper review based on the anniversary month, was due to the Department by the final day of August 2007. *See* 19 CFR 351.214(d)(1).

[2] South Vina made one subsequent shipment to the United States, while Binh An made two subsequent shipment during the POR, which the Department corroborated using data from U.S. Customs and Border Protection (''CBP'').

properly suspended for antidumping duties.

Initiation of New Shipper Reviews

Pursuant to section 751(a)(2)(B) of the Act and 19 CFR 351.214(d)(1), the Department finds that South Vina and Binh An's requests meet the threshold requirements for initiation of a new shipper review for the shipment of certain frozen fish fillets from Vietnam they produced and exported.

The POR for the two new shipper reviews is August 1, 2006, through July 31, 2007. *See* 19 CFR 351.214(g)(1)(ii)(A). The Department intends to issue the preliminary results of these reviews no later than 180 days from the date of initiation, and final results of these reviews no later than 270 days from the date of initiation. *See* section 751(a)(2)(B)(iv) of the Act.

On August 17, 2006, the Pension Protection Act of 2006 (H.R. 4) was signed into law. Section 1632 of H.R. 4 temporarily suspends the authority of the Department to instruct CBP to collect a bond or other security in lieu of a cash deposit in new shipper reviews. Therefore, the posting of a bond under section 751(a)(2)(B)(iii) of the Act and 19 CFR 351.214(e) in lieu of a cash deposit is not available in this case. Importers of subject merchandise manufactured and exported by South Vina and/or Binh An must continue to pay a cash deposit of estimated antidumping duties on each entry of subject merchandise at the current Vietnam–wide rate of 63.88 percent.

Interested parties requiring access to proprietary information in this new shipper review should submit applications for disclosure under administrative protective order in accordance with 19 CFR 351.305 and 351.306. This initiation and notice are published in accordance with section 751(a)(2)(B) of the Act and 19 CFR 351.214 and 351.221(c)(1)(i).

Dated: September 26, 2007.

Stephen J. Claeys,

Deputy Assistant Secretary for Import Administration.

[FR Doc. E7–19826 Filed 10–5–07; 8:45 am]

BILLING CODE 3510–DS–S

DEPARTMENT OF COMMERCE

International Trade Administration

[A–533–824, A–583–837]

Polyethylene Terephthalate Film, Sheet, and Strip From India and Taiwan: Final Results of the Expedited Sunset Reviews of the Antidumping Duty Orders

AGENCY: Import Administration, International Trade Administration, Department of Commerce.

SUMMARY: On June 1, 2007, the Department of Commerce (the Department) published in the **Federal Register** the notice of initiation of the five-year sunset reviews of the antidumping duty orders on polyethylene terephthalate film, sheet, and strip (PET Film) from India and Taiwan pursuant to section 751(c) of the Tariff Act of 1930, as amended (the Act).[1] As a result of adequate substantive response on filed on behalf of domestic interested parties and inadequate response from respondent interested parties, the Department has conducted expedited sunset reviews for these orders pursuant to section 751(c)(3)(B) of the Act and 19 CFR 351.218(e)(1)(ii)(c). As a result of this sunset review, the Department finds that revocation of the antidumping duty orders would be likely to lead to continuation or recurrence of dumping at the levels indicated in the ''Final Results of Review'' section of this notice.

DATES: *Effective Date:* October 9, 2007.

FOR FURTHER INFORMATION CONTACT: Martha Douthit or Dana Mermelstein, AD/CVD Operations, Office 6, Import Administration, International Trade Administration, U.S. Department of Commerce, 14th Street & Constitution Avenue, NW., Washington, DC 20230; telephone: (202) 482–5050 and (202) 482–1391, respectively.

SUPPLEMENTARY INFORMATION:

Background

On June 1, 2007, the Department initiated sunset reviews of the antidumping duty orders on PET Film from India and Taiwan, pursuant to section 751(c) of the Act. *See Notice of Initiation.* Within the deadline specified in section 351.218(d)(1)(i) of the Department's regulations, the Department received notices of intent to participate from domestic interested parties DuPont Teijin Films (DuPont), Mitsubishi Polyester Film of America (MFA), SKC, Inc. (SKC), and Toray Plastics (America), Inc. (TPA) (collectively, the PET Film Group). DuPont, MFA, and TPA were the petitioners in the original investigation. SKC was a supporter of the petition in the original investigation. The PET Film Group stated that they are not related to any Indian or Taiwanese producers or exporters of the subject merchandise. In addition, members of the PET Film Group noted that they are not importers of the subject merchandise and they are not related to any importer of the subject merchandise. The PET Film Group claimed interested party status under section 771(9)(C) of the Act as U.S. producers of a domestic like product.

On July 2, 2007, the Department received substantive responses from the PET Film Group within the deadline specified in 19 CFR 351.218(d)(3)(i). We did not receive responses from respondent interested parties in this proceeding. As such, pursuant to 19 CFR 351.218(e)(1)(ii)(c)(1), the Department notified the ITC that respondent interested parties' responses were inadequate. *See* Letter from Susan Kuhbach, Senior Director, AD/CVD Operations, Office 1, Import Administration, to Robert Carpenter, Director, Office of Investigations, ITC, dated July 23, 2007. In accordance with section 751(c)(3)(B) of the Act, the Department has conducted an expedited review of these orders.

Scope of the Orders

India and Taiwan

The products covered by these orders are all gauges of raw, pretested, or primed PET film, whether extruded or coextruded. Excluded are metallized films and other finished films that have had at least one of their surfaces modified by the application of a performance-enhancing resinous or inorganic layer more than 0.00001 inches thick. Imports of PET film were currently classifiable in the Harmonized Tariff Schedule of the United States (''HTSUS'') under item number 3920.62.00. Effective July 1, 2003, the HTSUS subheading 3920.62.00.00 was divided into 3920.62.00.10 (metallized PET film) and 3920.62.00.90 (non-metallized PET film). Although the HTSUS subheadings are provided for convenience and customs purposes, the written description of the scope of these orders is dispositive. Since these orders were published, there was one scope determination for PET Film from India, dated August 25, 2003. In this determination, requested by International Packaging Films, Inc., the

[1] *See Initiation of Five-Year (''Sunset'') Reviews,* 72 FR 30544 (June 1, 2007) (*Notice of Initiation*).

Department determined that tracing and drafting film is outside of the scope of the order on PET Film from India.[2]

Analysis of Comments Received

All issues raised in these reviews are addressed in the *Issues and Decision Memorandum for the Expedited Sunset Reviews of the Antidumping Duty Orders on PET Film from India and Taiwan; Final Results* from Stephen J. Claeys, Deputy Assistant Secretary for Import Administration, to David M. Spooner, Assistant Secretary for Import Administration, dated concurrently with this notice, and which is hereby adopted by this notice (*Decision Memorandum*). The issues discussed in the *Decision Memorandum* include the likelihood of continuation or recurrence of dumping and the magnitude of the margins likely to prevail if these orders were to be revoked. Parties can find a complete discussion of all issues raised in these reviews and the corresponding recommendations in this public memorandum which is on file in room B–099 of the main Department building. In addition, a complete version of the *Decision Memorandum* can be accessed directly on the Web at *http://ia.ita.doc.gov/frn.* The paper copy and electronic version of the Decision Memo are identical in content.

Final Results of Review

The Department has determined that revocation of the antidumping duty orders on PET Film from India and Taiwan would be likely to lead to continuation or recurrence of dumping. Further, the Department determines that the rates likely to prevail are as follows:

Manufacturers/exporters/producers	Weighted average margin (percent)
India	
Ester	[3] 5.71
Polyplex Corporation Limited	[4] 0.01
All Others	[5] 5.71
Taiwan	
Nan Ya Plastics Corporation, Ltd	2.49
Shinkong Synthetic Fibers Corporation	2.05
All Others	2.40

International Trade Commission (ITC) Notification

In accordance with section 752(c)(3) of the Act, we will notify the ITC of the final results of these expedited sunset reviews.

Administrative Protective Orders

This notice also serves as the only reminder to parties subject to administrative protective orders (''APO'') of their responsibility concerning the return or destruction of proprietary information disclosed under APO in accordance with 19 CFR 351.305. Timely notification of the return or destruction of APO materials or conversion to judicial protective orders is hereby requested. Failure to comply with the regulations and terms of an APO is a violation which is subject to sanction.

We are issuing and publishing the results and notice in accordance with sections 751(c), 752, and 777 of the Act.

Dated: October 1, 2007.

David M. Spooner,

Assistant Secretary for Import Administration.

[FR Doc. E7–19820 Filed 10–5–07; 8:45 am]

BILLING CODE 3510–DS–P

[2] *See Notice of Scope Rulings,* 70 FR 24533 (May 10, 2005).

[3] In the investigation, we found Ester's rate to be 24.14 percent, which was adjusted to 5.71 percent to take into account the export subsidy rate found in the companion countervailing duty investigation.

[4] In the investigation, we found Polyplex's rate to be 10.3 percent, which was adjusted to 0.01 percent to take into account the export subsidy rate found in the companion countervailing duty investigation, and we excluded Polyplex from the antidumping order. Polyplex's exclusion was subsequently reversed by a decision of the Court of International Trade. *See Dupont Teijin Films USA, LP, Mitsubishi Polyester Film of America, LLC, and Toray Plastics (America), Inc.* v. *United States and Polyplex Corporation Limited,* USCIT Slip Op. 04–70 (June 18, 2004); *Notice of Decision of the Court of International Trade: Polyethylene Terephthalate Film, Sheet, and Strip from India,* 69 FR 40352 (July 2, 2004).

[5] The ''all others'' rate established in the investigation was based on Ester's rate.

DEPARTMENT OF COMMERCE

International Trade Administration

[A–449–804]

Notice of Final Results of Antidumping Duty Administrative Review: Steel Concrete Reinforcing Bars From Latvia

AGENCY: Import Administration, International Trade Administration, Department of Commerce.

SUMMARY: On June 4, 2007, the Department of Commerce (the Department) published the preliminary results of its fifth administrative review of the antidumping duty order on steel concrete reinforcing bars (rebar) from Latvia. This review covers sales of rebar with respect to one producer of the subject merchandise, Joint Stock Company Liepajas Metalurgs (LM). The period of review (POR) is September 1, 2005, through August 31, 2006. We provided interested parties with an opportunity to comment on the preliminary results of this review, but received no comments. The final results do not differ from the preliminary results of this review. We will instruct the U.S. Customs and Border Protection to assess importer-specific antidumping duties on the subject merchandise exported by LM.

DATES: *Effective Date:* October 9, 2007.

FOR FURTHER INFORMATION CONTACT: David Layton at (202) 482–0371; AD/CVD Operations, Office 1, Import Administration, International Trade Administration, U.S. Department of Commerce, 14th Street & Constitution Avenue, NW., Washington, DC 20230.

SUPPLEMENTARY INFORMATION:

Background

In the preliminary results of this review (*see Notice of Preliminary Results of Antidumping Duty Administrative Review: Steel Concrete Reinforcing Bars from Latvia,* 72 FR 30773 (June 4, 2007) (''*Preliminary Results*'')), the Department of Commerce (''the Department'') invited interested parties to comment on the *Preliminary Results.* No comments were received.

Scope of the Order

The product covered by this order is all steel concrete reinforcing bars sold in straight lengths, currently classifiable in the Harmonized Tariff Schedule of the United States (HTSUS) under item numbers 7214.20.00, 7228.30.8050, 7222.11.0050, 7222.30.0000, 7228.60.6000, 7228.20.1000, or any other tariff item number. Specifically excluded are plain rounds (i.e., non-deformed or smooth bars) and rebar that has been further processed through bending or coating. HTSUS subheadings are provided for convenience and customs purposes. The written description of the scope of the order is dispositive.

Final Results of Review

These final results remain unchanged from the *Preliminary Results.* We provided an opportunity for parties to comment on our *Preliminary Results* and received no comments.

Therefore, we find that the following percentage weighted-average margin exists for the period of September 1, 2005, through August 31, 2006:

Producer	Weighted-average margin (percentage)
Joint Stock Company Liepajas Metalurgs	5.94

Assessment

The Department will determine, and U.S. Customs and Border Protection (CBP) shall assess, antidumping duties on all appropriate entries, pursuant to 19 CFR 351.212(b). We calculate importer-specific duty assessment rates on the basis of the ratio of the total amount of antidumping duties calculated for the examined sales to the total quantity of the sales for that importer. Where the assessment rate is above *de minimis*, we instruct CBP to assess duties on all entries of subject merchandise by that importer. As explained in the *Preliminary Results,* the Department will apply the importer-specific assessment rates calculated in the previous review. The Department intends to issue assessment instructions to CBP 15 days after the date of publication of these final results of review.

The Department clarified its ''automatic assessment'' regulation on May 6, 2003 (68 FR 23954). This clarification will apply to entries of subject merchandise during the POR produced by companies included in these final results of review for which the reviewed companies did not know their merchandise was destined for the United States. In such instances, the Department will instruct CBP to liquidate unreviewed entries at the all-others rate if there is no rate for the intermediate company(ies) involved in the transaction. For a full discussion of this clarification, *see Antidumping and Countervailing Duty Proceedings: Assessment of Antidumping Duties,* 68 FR 23954 (May 6, 2003).

Cash Deposits

The following cash deposit requirements were effective upon publication of the final results of the previous administrative review (*see Notice of Final Results of Antidumping Duty Administrative Review: Steel Concrete Reinforcing Bars from Latvia,* 71 FR 74900 (December 13, 2006)) for all shipments of rebar from Latvia entered, or withdrawn from warehouse, for consumption on or after December 13, 2006, as provided by section 751(a)(1) of the Tariff Act of 1930, as amended (''the Act''), and will continue to be in effect: (1) The cash deposit rate listed above for LM will be 5.94 percent; (2) for previously reviewed or investigated companies not listed above, the cash deposit rate will continue to be the company-specific rate published for the most recent period; (3) if the exporter is not a firm covered in this review, a prior review, or the less-than-fair-value (LTFV) investigation, but the manufacturer is, the cash deposit rate will be the rate established for the most recent period for the manufacturer of the merchandise; and (4) if neither the exporter nor the manufacturer is a firm covered in this or any previous review conducted by the Department, the cash deposit rate will be 17.21 percent, the ''All Others'' rate established in the LTFV investigation. These cash deposit requirements shall remain in effect until further notice.

This notice also serves as a final reminder to importers of their responsibility under 19 CFR 351.402(f)(2) to file a certificate regarding the reimbursement of antidumping duties prior to liquidation of the relevant entries during this review period. Failure to comply with this requirement could result in the Secretary's presumption that reimbursement of antidumping duties occurred, and in the subsequent assessment of double antidumping duties.

This notice also is the only reminder to parties subject to administrative protective order (APO) of their responsibility concerning the return or destruction of proprietary information disclosed under APO in accordance with 19 CFR 351.305. Timely written notification of the return/destruction of APO materials or conversion to judicial protective order is hereby requested. Failure to comply with the regulations and the terms of an APO is a sanctionable violation.

We are issuing and publishing these results and notice in accordance with sections 751(a)(1) and 777(i)(1) of the Act.

October 2, 2007.

David M. Spooner,

Assistant Secretary for Import Administration.

[FR Doc. E7–19821 Filed 10–5–07; 8:45 am]

BILLING CODE 3510–DS–P

DEPARTMENT OF COMMERCE

International Trade Administration

Illinois Institute of Technology; Notice of Decision on Application; for Duty-Free Entry of Scientific Instruments

This is a decision pursuant to section 6(c) of the Educational, Scientific, and Cultural Materials Importation Act of 1966 (Pub. L. 89–651, as amended by Pub. L. 106–36; 80 Stat. 897; 15 CFR part 301). Related records can be viewed between 8:30 a.m. and 5:00 p.m. in Room 2104, U.S. Department of Commerce, 14th and Constitution Ave, NW., Washington, DC.

Comments: None received. *Decision:* Approved. We know of no instrument of equivalent scientific value to the foreign instruments described below, for such purposes as each is intended to be used, that was being manufactured in the United States at the time of its order.

Docket Number: 07–056. Applicant: Illinois Institute of Technology, Chicago, IL. Instrument: Micro Test Pendulum with Hot-Stage Extension & Spherical Indenters. Manufacturer: Micro Materials Ltd., United Kingdom. Intended Use: See notice at 72 FR 52084, September 12, 2007. *Reason:* The instrument must be capable of testing materials at temperatures in excess of 700 °C or at a load capacity of 10kN. Both of these features are critical in the assessment of mechanical properties of high strength materials at elevated temperatures.

Dated: October 3, 2007.

Faye Robinson,

Director, Statutory Import Programs Staff, Import Administration.

[FR Doc. E7–19825 Filed 10–5–07; 8:45 am]

BILLING CODE 3510–DS–P

DEPARTMENT OF COMMERCE

International Trade Administration

District Export Council Nomination Opportunity

AGENCY: International Trade Administration, Commerce.

ACTION: Notice.

Mission Statement: Notice and call for membership for one of the Sixty District Export Councils nationwide.

SUMMARY: The U.S. Department of Commerce is currently seeking expressions of interest from individuals in serving as a member of one of the Sixty District Export Councils (DECs) nationwide. The DECs are closely affiliated with the U.S. Export Assistance Centers of the U.S. Commercial Service. DECs combine the energies of more than 1,500 exporters and export service providers who promote U.S. exports. DEC members volunteer at their own expense.

DATES: Applications for nomination to a DEC must be submitted by the designated local USEAC representative by November 1, 2007.

FOR FURTHER INFORMATION CONTACT: Contact your local U.S. Export

Assistance Center at: *http://www.buyusa.gov/home/us.html*; or call Andy Karellas with the U.S. Commercial Service at (202) 482–3642, Fax: 202–482–0687.

SUPPLEMENTARY INFORMATION: DECs sponsor and participate in numerous trade promotion activities, as well as supply specialized expertise to small and medium-sized businesses that are interested in exporting.

Selection Process: About half of the approximately 30 positions on each of the 60 DECs are open for nominations for the term that ends December 31, 2011. Nominees are recommended by the local U.S. Export Assistance Center Director, in consultation with the DEC and other local export promotion partners. After a review process, nominees are selected and appointed to a DEC by the Secretary of Commerce.

Membership Criteria: Each DEC is interested in nominating highly-motivated people. Appointment is based upon an individual's energetic leadership, position in the local business community, knowledge of day-to-day international operations, interest in export development, and willingness and ability to devote time to council activities. Members include exporters, export service providers and others whose profession supports U.S. export promotion efforts.

Authority: 15 U.S.C. 1501 *et seq.*, 15 U.S.C. 4721.

Dated: October 2, 2007.

Andy Karellas,

Office of Domestic Operations, U.S. Commercial Service, U.S. Department of Commerce.

[FR Doc. E7–19854 Filed 10–5–07; 8:45 am]

BILLING CODE 3510–FP–P

DEPARTMENT OF COMMERCE

International Trade Administration

[C–533–825]

Polyethylene Terephthalate Film, Sheet, and Strip From India: Final Results of Expedited Five-Year (Sunset) Review of the Countervailing Duty Order

AGENCY: Import Administration, International Trade Administration, Department of Commerce.

SUMMARY: On June 1, 2007, the Department of Commerce (the Department) published in the **Federal Register** the notice of initiation of the first five-year sunset review of the countervailing duty order on polyethylene terephthalate (PET) film from India, pursuant to section 751(c) of the Tariff Act of 1930, as amended (the Act). *See Initiation of Five-Year (''Sunset'') Reviews,* 72 FR 30544 (June 1, 2007) (*Initiation*). On the basis of notices of intent to participate and adequate substantive responses filed on behalf of domestic interested parties, and inadequate responses from respondent interested parties (in this case, neither the Government of India nor any of the respondent companies covered by the order provided a response), the Department conducted an expedited sunset review of these orders pursuant to section 751(c)(3)(B) of the Act and 19 CFR 351.218(e)(1)(ii)(B) and (C). As a result of this sunset review, the Department finds that revocation of the countervailing duty order is likely to lead to continuation or recurrence of countervailable subsidies at the levels indicated in the ''Final Results of Review'' section of this notice.

DATES: *Effective Dates:* October 9, 2007.

FOR FURTHER INFORMATION CONTACT: Elfi Blum or Dana Mermelstein, AD/CVD Operations, Office 6, Import Administration, International Trade Administration, U.S. Department of Commerce, 14th Street and Constitution Ave., NW., Washington, DC 20230; telephone: (202) 482–0197 or (202) 482–1391, respectively.

SUPPLEMENTARY INFORMATION:

Background

On June 1, 2007, the Department initiated the first sunset review of the countervailing duty order on PET film from India, pursuant to section 751(c) of the Act. *See Initiation*, 72 FR 30544. The Department received notices of intent to participate from DuPont Teijin Films (DuPont), Mitsubishi Polyester Film of America (MFA), SKC, Inc. (SKC), and Toray Plastics (America), Inc. (TPA) (collectively, domestic interested parties), within the deadline specified in 19 CFR 351.218(d)(1)(i). Domestic interested parties claimed interested party status as U.S. producers engaged in the manufacture, production, or wholesale of PET film in the United States, pursuant to section 771(9)(C) of the Act. On June 15, 2007, respondent, Garware Polyester Ltd. (Garware) notified the Department of its interest in participating in this sunset review.

On July 2, 2007, the Department received a substantive response from domestic interested parties within the deadline specified in 19 CFR 351.218(d)(3)(i). The Department did not receive any substantive responses from any respondent interested party to this proceeding. Although Garware notified the Department of its interest in participating in the review, it did not file a substantive response. In accordance with 19 CFR 351.218(e)(1)(ii)(C)(1), the Department notified the International Trade Commission (ITC) that respondent interested parties to the CVD order on PET film from India, provided inadequate responses to the *Initiation*, 72 FR 30544. The Department, therefore, has conducted an expedited sunset review of the countervailing duty order, pursuant to 19 CFR 351.218(e)(1)(ii)(B) and (C)(2).

Since the publication of the countervailing duty order, there have been three completed administrative reviews of this order. *See Notice of Countervailing Duty Order: Polyethylene Terephthalate Film, Sheet, and Strip (PET Film) from India,* 67 FR 44179 (July 1, 2002). There have been no requests for scope clarifications and no changed circumstances reviews.

Scope of the Order

The products covered by this order are all gauges of raw, pretreated, or primed polyethylene terephthalate film, sheet and strip (PET film), whether extruded or coextruded. Excluded are metallized films and other finished films that have had at least one of their surfaces modified by the application of a performance-enhancing resinous or inorganic layer of more than 0.00001 inches thick. Imports of PET film were classifiable in the Harmonized Tariff Schedule of the United States (HTSUS) under item number 3920.62.00. Effective July 1, 2003, the HTSUS subheading 3920.62.00.00 was divided into 3920.62.00.10 (metallized PET film) and 3920.62.00.90 (non-metallized PET film). HTSUS subheadings are provided for convenience and customs purposes. The written description of the scope of this order is dispositive.

Analysis of Comments Received

All issues raised, in the substantive responses, by parties to this sunset review are addressed in the *Issues and Decision Memorandum for Final Results of Expedited Sunset Review of the Countervailing Duty Orders on Polyethylene Terephthalate Film, Sheet, and Strip from India,* from Stephen J. Claeys, Deputy Assistant Secretary for Import Administration, to David M. Spooner, Assistant Secretary for Import Administration, dated concurrently with this notice (*Decision Memorandum*), which is hereby adopted by this notice. The issues discussed in the *Decision Memorandum* include the likelihood of continuation or recurrence of a countervailable subsidy, the net countervailable subsidy rate likely to prevail if the order were

revoked and the nature of the subsidy. Parties can find a complete discussion of all issues raised in these sunset reviews and the corresponding recommendation in this public memorandum, which is on file in the Import Administration Central Records Unit, Room B–099 of the main Commerce building. In addition, a complete version of the *Decision Memo* can be accessed directly on the Department's Web page at *http://ia.ita.doc.gov/frn.* The paper copy and electronic version of the *Decision Memorandum* are identical in content.

Final Results of Review

The Department determines that revocation of the countervailing duty order on PET Film from India would be likely to lead to continuation or recurrence of countervailable subsidies at the following subsidy rates:

Manufacturers/exporters	Subsidy rate (percent *ad valorem*)
Ester Industries Ltd	27.39
Garware Polyester Ltd	33.44
Polyplex Corporation Ltd	22.71
All Others	29.36

International Trade Commission (ITC) Notification

In accordance with section 752(b)(3) of the Act, we will notify the ITC of the final results of this expedited sunset review.

Administrative Protective Orders

This notice also serves as the only reminder to parties subject to administrative protective orders (APO) of their responsibility concerning the return or destruction of proprietary information disclosed under APO in accordance with 19 CFR 351.305. Timely notification of the return or destruction of APO materials or conversion to judicial protective order is hereby requested. Failure to comply with the regulations and terms of an APO is a violation that is subject to sanction.

We are issuing and publishing this determination and notice in accordance with sections 751(c), 752(b), and 777(i) of the Act.

Dated: October 1, 2007.

David M. Spooner,

Assistant Secretary for Import Administration.

[FR Doc. E7–19818 Filed 10–5–07; 8:45 am]

BILLING CODE 3510–DS–P

DEPARTMENT OF COMMERCE

International Trade Administration

[Docket No.: 070926537–7538–01]

Effect on Propane Consumers of the Propane Education and Research Council's Operations, Market Changes and Federal Programs

AGENCY: International Trade Administration, Department of Commerce.

ACTION: Notice of Inquiry.

SUMMARY: The Department of Commerce (the Department) is seeking public comment on whether the operation of the Propane Education and Research Council (PERC), in conjunction with the cumulative effects of market changes and Federal programs, has had an effect on residential, agricultural, process and nonfuel users of propane. This notice of inquiry is part of an effort to collect information to fulfill requirements under the Propane Education and Research Act of 1996 that established PERC and requires the Secretary of Commerce to assess the impact of PERC's activities on propane consumers.

DATES: Comments on this notice must be submitted on or before November 8, 2007.

ADDRESSES: You may submit comments by any of the following methods:

E-mail: *Frank.Caliva@mail.doc.gov.* Include the phrase ''Propane Price Impacts on Consumers'' in the subject line;

Fax: (202) 482–5665 (Attn: Frank Caliva);

Mail or Hand Delivery/Courier: Frank Caliva, U.S. Department of Commerce, 14th Street & Constitution Ave., NW., Suite 4053, Washington, DC 20230.

FOR FURTHER INFORMATION CONTACT: For questions on the submission of comments or to request copies of submitted comments, contact Frank Caliva by telephone at 202–482–8245, or e-mail at *Frank.Caliva@mail.doc.gov.*

SUPPLEMENTARY INFORMATION: The Propane Education and Research Act of 1996 (Pub. L. 104–284) established the Propane Education and Research Council to enhance consumer and employee safety and training, to provide for research and development of clean and efficient propane utilization equipment, and to inform and educate the public about safety and other issues associated with the use of propane.

Section 12 of the Act requires the Secretary of Commerce to prepare and submit to Congress and the Secretary of Energy a report examining whether operation of the Council, in conjunction with the cumulative effects of market changes and Federal programs, has had an effect on propane consumers, including residential, agriculture, process, and nonfuel users of propane. The Secretary of Commerce shall consider and, to the extent practicable, shall include in the report submissions by propane consumers, and shall consider whether: (1) There have been long-term and short-term effects on propane prices as a result of the Council's activities and Federal programs; and (2) whether there have been changes in the proportion of propane demand attributable to various market segments. If the report demonstrates that there has been an adverse effect related to the Council's activities, the Secretary of Commerce shall make recommendations for correcting the situation.

In order to assist in the preparation of this study, the Department is seeking public comment on the effect of PERC's operation, market changes and Federal programs on propane consumers. For information on the operation and programs of PERC, you may visit PERC's Web site at *http://www.propanecouncil.org* or call PERC at (202) 452–8975.

The Department encourages interested persons who wish to comment to do so at the earliest possible time. The period for submission of comments will close on November 8, 2007. The Department will consider all comments received before the close of the comment period. Comments received after the end of the comment period will be considered, if possible, but their consideration cannot be assured. The Department will not accept comments accompanied by a request that a part or all of the material be treated confidentially because of its business proprietary nature or for any other reason. The Department will return such comments and materials to the persons submitting the comments and will not consider them. All comments submitted in response to this notice will be a matter of public record and will be available for public inspection and copying. All comments must be submitted to the Department through one of the methods listed under **ADDRESSES**.

The office does not maintain a separate public inspection facility. If you would like to view any comments received in response to this solicitation,

please contact the individual listed in **FOR FURTHER INFORMATION CONTACT**.

Jamie Estrada,

Deputy Assistant Secretary for Manufacturing.

[FR Doc. E7–19844 Filed 10–5–07; 8:45 am]

BILLING CODE 3510–DR–P

DEPARTMENT OF COMMERCE

National Institute of Standards and Technology

Advisory Committee on Earthquake Hazards Reduction Meeting

AGENCY: National Institute of Standards and Technology, United States Department of Commerce.

ACTION: Notice of open meeting.

SUMMARY: The Advisory Committee on Earthquake Hazards Reduction (ACEHR or Committee) will meet Tuesday, October 23, 2007, from 9 a.m. to 5:30 p.m. and Wednesday, October 24, 2007, from 8 a.m. to 4 p.m. The primary purpose of this meeting is to discuss implementation of the National Earthquake Hazards Reduction Program (NEHRP) statutory activities and the Committee's annual report to the NIST Director. The agenda may change to accommodate Committee business. The final agenda will be posted on the NEHRP Web site at *http://nehrp.gov/.*

DATES: The ACEHR will meet on Tuesday, October 23, 2007, from 9 a.m. until 5:30 p.m. The meeting will continue on Wednesday, October 24, 2007, from 8 a.m. until 4 p.m. The meeting will be open to the public.

ADDRESSES: The meeting will be held in the entry-level conference room at the U.S. Geological Survey (USGS) in Golden, Colorado. Please note admittance instructions under the **SUPPLEMENTARY INFORMATION** section of this notice.

FOR FURTHER INFORMATION CONTACT: Dr. Jack Hayes, Director, National Earthquake Hazards Reduction Program, National Institute of Standards and Technology, 100 Bureau Drive, MS 8600, Gaithersburg, Maryland 20899–8600. Dr. Hayes' e-mail address is *jack.hayes@nist.gov* and his phone number is (301) 975–5640.

SUPPLEMENTARY INFORMATION: The Committee was established in accordance with the requirements of Section 103 of the NEHRP Reauthorization Act of 2004 (Pub. L. 108–360). The Committee is composed of 15 members, appointed by the Director of NIST, who were selected for their technical expertise and experience, established records of distinguished professional service, and their knowledge of issues affecting the National Earthquake Hazards Reduction Program. In addition, the Chairperson of the U.S. Geological Survey (USGS) Scientific Earthquake Studies Advisory Committee (SESAC) will serve in an ex officio capacity on the Committee. The Committee will assess:

- Trends and developments in the science and engineering of earthquake hazards reduction;
- the effectiveness of NEHRP in performing its statutory activities (improved design and construction methods and practices; land use controls and redevelopment; prediction techniques and early-warning systems; coordinated emergency preparedness plans; and public education and involvement programs);
- any need to revise NEHRP; and
- the management, coordination, implementation, and activities of NEHRP.

Background information on NEHRP and the Advisory Committee is available at *http://nehrp.gov/.*

Pursuant to the Federal Advisory Committee Act, 5 U.S.C. app. 2, notice is hereby given that the Advisory Committee on Earthquake Hazards Reduction (ACEHR) will meet Tuesday, October 23, 2007, from 9 a.m. until 5:30 p.m. The meeting will continue on Wednesday, October 24, 2007 from 8 a.m. until 4 p.m. The meeting will be held in the entry-level conference room at the U.S. Geological Survey (USGS) in Golden, Colorado. The primary purpose of this meeting is to discuss implementation of the NEHRP statutory activities, review NEHRP agency budget preparation and implementation procedures for the Committee, and initiate preparation of the Committee's annual report to the NIST Director. The agenda may change to accommodate Committee business. The final agenda will be posted on the NEHRP Web site at *http://nehrp.gov/.*

Individuals and representatives of organizations who would like to offer comments and suggestions related to the Committee's affairs are invited to request a place on the agenda. On October 23, 2007, approximately one-half hour will be reserved for public comments, and speaking times will be assigned on a first-come, first-served basis. The amount of time per speaker will be determined by the number of requests received, but is likely to be 3 minutes each. Questions from the public will not be considered during this period. Speakers who wish to expand upon their oral statements, those who had wished to speak but could not be accommodated on the agenda, and those who were unable to attend in person are invited to submit written statements to the ACEHR, National Institute of Standards and Technology, 100 Bureau Drive, MS 8600, Gaithersburg, Maryland 20899–8600, via fax at (301) 975–4032, or electronically by e-mail to *info@nehrp.gov.*

All visitors to the USGS site are required to pre-register to be admitted. Anyone wishing to attend this meeting must register by close of business Tuesday, October 16, 2007, in order to attend. Please submit your name, time of arrival, e-mail address and phone number to Amber Stillrich. Non-U.S. citizens must also submit their country of citizenship, title, employer/sponsor, and address. Ms. Stillrich's e-mail address is *amber.stillrich@nist.gov* and her phone number is (301) 975–3777.

Dated: October 1, 2007.

James M. Turner,

Acting Director.

[FR Doc. E7–19796 Filed 10–5–07; 8:45 am]

BILLING CODE 3510–13–P

DEPARTMENT OF COMMERCE

National Oceanic and Atmospheric Administration

Notice Requesting Nominations for the Advisory Committee on Commercial Remote Sensing (ACCRES)

SUMMARY: The Advisory Committee on Commercial Remote Sensing (ACCRES) was constituted to advise the Secretary of Commerce through the Under Secretary of Commerce for Oceans and Atmosphere on matters relating to the U.S. commercial remote sensing industry and NOAA's activities to carry out responsibilities of the Department of Commerce set forth in the Land Remote Sensing Policy Act of 1992 (15 U.S.C. Secs. 5621–5625). The Committee is composed of leaders in the commercial space-based remote sensing industry, space-based remote sensing data users, government (Federal, state, local), and academia. The Department of Commerce is seeking up to six highly qualified individuals knowledgeable about the commercial space-based remote sensing industry and uses of space-based remote sensing data to serve on the Committee.

DATES: Nominations must be postmarked on or before November 8, 2007.

SUPPLEMENTARY INFORMATION: ACCRES was established by the Secretary of Commerce (Secretary) on May 21, 2002, to advise the Secretary through the Under Secretary of Commerce for

Oceans and Atmosphere on matters relating to the U.S. commercial remote sensing industry and NOAA's activities to carry out responsibilities of the Department of Commerce set forth in the Land Remote Sensing Policy Act of 1992 (15 U.S.C. Secs. 5621–5625).

The Committee meets at least twice a year. Committee members serve in a representative capacity for a term of two years and may serve up to two consecutive terms, if reappointed. No less than 12 and no more than 15 individuals may serve on the Committee. Membership is comprised of highly qualified individuals representing the commercial space-based remote sensing industry, space-based remote sensing data users, government (Federal, state, local), and academia from a balance of geographical regions. Nominations are encouraged from all interested persons and organizations representing interests affected by the U.S. commercial space-based remote sensing industry. Nominees must possess demonstrable expertise in a field related to the space-based commercial remote sensing industry or exploitation of space-based commercial remotely sensed data and be able to attend committee meetings that are held at least two times per year. In addition, selected candidates must apply for and obtain a security clearance. Membership is voluntary, and service is without pay.

Each nomination submission should include the proposed committee member's name and organizational affiliation, a cover letter describing the nominee's qualifications and interest in serving on the Committee, a curriculum vitae or resume of the nominee, and no more than three supporting letters describing the nominee's qualifications and interest in serving on the Committee. Self-nominations are acceptable. The following contact information should accompany each submission: The nominee's name, address, phone number, fax number, and e-mail address, if available.

Nominations should be sent to David Hasenauer, NOAA/NESDIS International and Interagency Affairs, 1335 East West Highway, Room 7311, Silver Spring, Maryland 20910 and nominations must be received by November 8, 2007. The full text of the Committee Charter and its current membership can be viewed at the Agency's Web page at *http://www.accres.noaa.gov/index.html.*

FOR FURTHER INFORMATION CONTACT: David Hasenauer, NOAA/NESDIS International and Interagency Affairs, 1335 East West Highway, Room 7311, Silver Spring, Maryland 20910; telephone (301) 713–2024 x207, fax (301) 713–2032, e-mail *David Hasenauer@noaa.gov.*

Mary E. Kicza,

Assistant Administrator for Satellite and Information Services.

[FR Doc. E7–19791 Filed 10–5–07; 8:45 am]

BILLING CODE 3510–HR–P

DEPARTMENT OF COMMERCE

National Oceanic and Atmospheric Administration

RIN 0648–XD02

Endangered and Threatened Species; Recovery Plans

AGENCY: National Marine Fisheries Service (NMFS), National Oceanic and Atmospheric Administration, Commerce.

ACTION: Notice of Availability.

SUMMARY: The National Marine Fisheries Service (NMFS) announces the adoption of an Endangered Species Act (ESA) recovery plan for the Upper Columbia River Spring-Run Chinook Salmon (*Oncorhynchus tshawytscha*) evolutionarily significant unit (ESU) and the Upper Columbia River steelhead (*Oncorhynchus mykiss*) distinct population segment (DPS). The Upper Columbia Spring Chinook Salmon and Steelhead Recovery Plan (the Plan) contains 27 appendices.

ADDRESSES: Additional information about the Plan may be obtained by writing to Lynn Hatcher, National Marine Fisheries Service, 304 S. Water Street, Suite #201, Ellensburg, WA 98926, or by calling (509) 962–8911.

Electronic copies of the Plan and the summary of and response to public comments on the Proposed (Draft) Recovery Plan are available online at www.nwr.noaa.gov/Salmon-Recovery-Planning/Recovery-Domains/Interior-Columbia/Upper-Columbia/Index.cfm, or the Upper Columbia Salmon Recovery Board website, www.ucsrb.com/. A CD-ROM of these documents can be obtained by calling Sharon Houghton at (503) 230–5418 or by e-mailing a request to *sharon.houghton@noaa.gov*, with the subject line ''CD-ROM Request for Final ESA Recovery Plan for Upper Columbia Salmon and Steelhead.''

FOR FURTHER INFORMATION CONTACT: Lynn Hatcher, NMFS Upper Columbia Salmon Recovery Coordinator at (509) 962–8911, or Elizabeth Gaar, NMFS Salmon Recovery Division, at (503) 230–5434.

SUPPLEMENTARY INFORMATION:

Background

Recovery plans describe actions beneficial to the conservation and recovery of species listed under the Endangered Species Act of 1973 (ESA), as amended (16 U.S.C. 1531 *et seq.*). The ESA requires that recovery plans, to the extent practicable, incorporate: (1) objective, measurable criteria which, when met, would result in a determination that the species is no longer threatened or endangered; (2) site-specific management actions that may be necessary to achieve the plan's goals; and (3) estimates of the time required and costs to implement recovery actions. The ESA requires the development of recovery plans for listed species unless such a plan would not promote the recovery of a particular species.

NMFS' goal is to restore endangered and threatened Pacific salmon and steelhead to the point that they are again self-sustaining members of their ecosystems and no longer need the protections of the ESA. NMFS believes it is critically important to base its recovery plans on the many state, regional, tribal, local, and private conservation efforts already underway throughout the region. Therefore, the agency supports and participates in locally led collaborative efforts to develop recovery plans, involving local communities, state, tribal, and Federal entities, and other stakeholders. As the lead ESA agency for listed salmon, NMFS is responsible for reviewing these locally produced recovery plans and deciding whether they meet ESA statutory requirements and merit adoption as ESA recovery plans.

The Upper Columbia River Spring-Run Chinook Salmon (O. tshawytscha) ESU was listed as endangered under the ESA on March 24, 1999 (64 FR 14307). The Upper Columbia River Steelhead (O. mykiss) DPS was listed as endangered on August 18, 1997 (62 FR 43937), and reclassified as threatened on January 5, 2006 (71 FR 834). The 2006 reclassification of the steelhead DPS was invalidated as the result of a decision in U.S. District Court on June 13, 2007 (Trout Unlimited, *et al.* v. Lohn, No. CV–06–1493–ST). Thus, the present status of the Upper Columbia River Steelhead DPS is endangered.

On December 30, 2005, the Upper Columbia Salmon Recovery Board (UCSRB) presented its locally developed Draft Recovery Plan to NMFS. The UCSRB includes representatives from Chelan County, Douglas County, Okanogan County, Yakama Nation, and the Confederated Tribes of the Colville

Reservation. A variety of additional partners, representing Federal agencies, Washington State agencies, regional organizations, special purpose districts, and members of the public, also participated in the planning process.

After NMFS reviewed the Draft Recovery Plan, NMFS and the UCSRB revised it to clarify how it satisfies ESA recovery plan requirements and to address additional elements as needed. The jointly revised Draft Recovery Plan was made available for public review as a Proposed Recovery Plan, and a notice of availability soliciting public comments on the Proposed Recovery Plan was published in the **Federal Register** on September 29, 2006 (71 FR 57472). NMFS received 73 comment letters on the Proposed Recovery Plan. An itemized record of all comments is included in the final Plan as Appendix O.4. NMFS summarized the public comments and prepared responses, now available on the NMFS website at *www.nwr.noaa.gov/Salmon-Recovery-Planning/Recovery-Domains/Interior-Columbia/Upper-Columbia/Index.cfm*. Public hearings were conducted on November 8, 2006, in Okanogan, Washington, and on November 9, 2006, in Wenatchee, Washington. Complete copies of the Proposed Recovery Plan were placed in the Twisp, Entiat, Okanogan, and Wenatchee, Washington, public libraries. NMFS and the UCSRB again revised the plan based on the comments received, and this final version now constitutes the ESA Recovery Plan for Upper Columbia Spring Chinook Salmon and Upper Columbia Steelhead.

By endorsing this locally developed recovery plan, NMFS is making a commitment to implement the actions in the plan for which it has authority, to work cooperatively on implementation of other actions, and to encourage other Federal agencies to implement recovery plan actions for which they have responsibility and authority. NMFS will also encourage the State of Washington to seek similar implementation commitments from state agencies and local governments. NMFS expects the Plan to help NMFS and other Federal agencies take a more consistent approach to future ESA section 7 consultations and other ESA decisions. For example, the Plan will provide greater biological context for the effects that a proposed action may have on the listed ESU and DPS. Science described in the Plan will become a component of the ''best available information'' reviewed for ESA section 7 consultations, section 10 permits and habitat conservation plans (HCPs), and other ESA decisions. Such information includes viability criteria for the ESU, DPS, and their independent populations; better understanding of and information on limiting factors and threats facing the ESU and DPS; better information on priority areas for addressing specific limiting factors; and better geographic context for assessing risk to the ESU and DPS.

The Recovery Plan

The Plan is one of many ongoing salmon recovery planning efforts funded under the Washington State Strategy for Salmon Recovery. The State of Washington designated the UCSRB as the Lead Entity for salmon recovery planning for the Upper Columbia. The UCSRB has consistently involved the public in its recovery planning process, making changes based on extensive comments received during public comment periods for the Draft Recovery Plan in January, April, and June of 2005, and during the public comment period for the Proposed Recovery Plan from September 2006 to February 2007.

The Plan is an outgrowth and culmination of several conservation efforts in the Upper Columbia Basin, including current efforts related to the ESA, state- and tribally sponsored recovery efforts, subbasin planning, and watershed planning.

The Upper Columbia planning effort was supported by a NMFS-appointed science panel, the Interior Columbia Technical Recovery Team (ICTRT). This panel of 11 scientific experts from Federal, state, local, and private organizations identified historical populations and recommended ESU viability criteria (ICTRT 2005 and 2007). The ICTRT reviewed early drafts of the plan and provided scientific peer review of the Proposed Recovery Plan. In addition, staff biologists of the Washington Department of Fish and Wildlife, U.S. Fish and Wildlife Service, U.S. Forest Service, Yakama Nation, Confederated Tribes of the Colville Reservation, Okanogan County, Douglas County, and Chelan County reviewed the UCSRB Plan at each stage. NMFS Northwest Region staff biologists also reviewed draft versions of the Plan and provided substantial guidance for revisions.

The Plan incorporates the NMFS viable salmonid population (VSP) framework (McElhany *et al.*, 2000) as a basis for biological status assessments and recovery goals for Upper Columbia River spring Chinook salmon and Upper Columbia River steelhead.

ESU Addressed and Planning Area

The Plan will be implemented within the range of the Upper Columbia River Spring-Run Chinook Salmon ESU and the Upper Columbia River Steelhead DPS. The planning area includes parts of Okanogan, Douglas, Chelan, and Grant counties.

The ICTRT identified three independent populations in the spring Chinook salmon ESU (Wenatchee, Entiat, and Methow), and five independent populations in the steelhead DPS (Wenatchee, Entiat, Methow, Okanogan, and Crab Creek). These independent populations were identified based on the genetic, geographic, and habitat characteristics they share within the ESU or the DPS. Each population's size category (very large, large, medium, or basic) was based on its historical population size. The Upper Columbia tributaries were further divided into Major Spawning Areas and Minor Spawning Areas based on the within-population complexity of tributary spawning habitats.

The Plan's Recovery Goals, Objectives and Criteria

The Plan's goal is to achieve recovery and delisting of spring Chinook salmon and steelhead by ensuring the long-term persistence of viable populations of naturally produced fish distributed across their native range. The Plan bases biological status assessments and recovery goals on the four VSP parameters: abundance, productivity, spatial structure, and diversity (McElhany *et al.* 2000).

Evaluating a species for potential delisting requires an explicit analysis of population or demographic parameters (biological recovery criteria) and also of threats under the five ESA listing factors in ESA section 4(a)(1) (threats criteria). Together these make up the ''objective, measurable criteria'' required under section 4(f)(1)(B). While the ESU or DPS is the listed entity under the ESA, the viability criteria are based on the collective viability, characteristics, and distribution of the individual populations that make up the ESU or DPS.

The Plan identifies two levels of recovery objectives. The first level relates to reclassifying the endangered species as threatened and the second relates to recovery (delisting). The reclassification objectives include increasing the abundance, productivity, and distribution of naturally produced steelhead and spring Chinook salmon sufficient to lead to reclassification as threatened, and conserving their genetic and phenotypic diversity.

The Plan's recovery (delisting) objectives include increasing the abundance of naturally produced spring Chinook salmon and steelhead

spawners within each population in the Upper Columbia River ESU/DPS to levels considered viable; increasing the productivity (spawner:spawner ratios and smolts/ redds) of naturally produced spring Chinook salmon and steelhead within each population to levels that result in low risk of extinction; restoring the distribution of naturally produced spring Chinook salmon and steelhead to previously occupied areas where practical; and conserving their genetic and phenotypic diversity.

The Plan sets forth specific criteria to meet the recovery objectives, based on the ICTRT's recommended criteria, which, if met, would indicate a high probability of persistence into the future for Upper Columbia River spring Chinook salmon and steelhead. The Plan establishes criteria for 95 percent probability of persistence (5 percent extinction risk) for all Upper Columbia River spring Chinook salmon populations, and all but one population of the steelhead DPS. The Plan concludes that the Upper Columbia River steelhead DPS may be recovered without attaining the 95 percent probability of persistence for the Crab Creek population, based on the possibility that this population was not viable historically because of environmental conditions (e.g., intermittent stream flows and high water temperatures).

The ICTRT recently recommended that, in an ESU/DPS containing only one major population group (MPG), as is the case for both Upper Columbia River spring-run Chinook salmon and Upper Columbia River steelhead, at least two populations should meet abundance/ productivity criteria representing a 1–percent extinction risk (99–percent probability of persistence) over a 100–year period (ICTRT 2005b, p. 46). The ICTRT considers the 5 percent risk level ''viable'' and the 1 percent risk level ''highly viable.'' The Plan does not adopt this more recent recommendation, but instead adopts the 5 percent extinction risk for abundance/ productivity for all populations in the Chinook salmon ESU and all but one in the steelhead DPS, as stated above.

NMFS accepts the UCSRB's recommended recovery (delisting) criteria because they call for all known extant populations within the Chinook ESU and steelhead DPS to be viable. Furthermore, NMFS believes that it is not possible at this time to distinguish between the levels of effort needed to attain 95 vs. 99 percent probability of persistence; therefore, the Plan's actions would not change at this time in response to the ICTRT's more recently recommended criterion. Finally, NMFS will re-evaluate ESU and DPS status and the appropriateness of the recovery criteria in 5 years or less based on additional data from monitoring and research on critical uncertainties, and could modify the recovery plan accordingly.

Causes for Decline and Current Threats

The ESA includes five factors, in section 4(a)(1), to be evaluated when the initial determination to list a species for protection is made. These factors are: (a) the present or threatened destruction, modification, or curtailment of a species' habitat or range; (b) overutilization for commercial, recreational, or educational purposes; (c) disease or predation; (d) the inadequacy of existing regulatory mechanisms; and (e) other natural or manmade factors affecting the species' continued existence (16 U.S.C. 1533[a][1]). These five factors may or may not still be limiting recovery when, in the future, NMFS reevaluates the status of the species to determine whether the protections of the ESA are sill warranted, and whether the species can be delisted. In the Plan, NMFS provides criteria for each of the relevant listing/delisting factors to help ensure that underlying causes of decline have been addressed and mitigated before considering the species for delisting.

The Plan identifies the main causes for the decline of the Upper Columbia River steelhead and spring Chinook salmon as: (1) human adaptation and destruction of habitat; (2) the effects of hydroelectric operations; (3) the effects of commercial, sport, and tribal fisheries; and (4) the impacts of hatchery programs and practices.

Habitat: Human activities have altered and/or curtailed habitat-forming processes and limited the habitat suitable for spring Chinook salmon and steelhead in the Upper Columbia River tributaries. Although recent land and water management practices have improved, some storage dams, diversions, roads and railways, agriculture, residential development, and forest management continue to cause changes in water flow, water temperature, sedimentation, floodplain dynamics, riparian function, and other aspects of the ecosystem, that are deleterious to spring Chinook salmon and steelhead and their habitat.

Hydroelectric Operations: Conditions for Upper Columbia River spring Chinook salmon and steelhead have been fundamentally altered throughout the Columbia River basin by the construction and operation of mainstem dams and reservoirs for power generation, navigation, and flood control. Upper Columbia River salmon and steelhead are adversely affected by hydrosystem-related flow and water quality effects, obstructed and/or delayed passage, and ecological changes in impoundments.

Harvest: Harvest of Upper Columbia River spring Chinook salmon and steelhead occurs in commercial, recreational, and tribal fisheries in the mainstem Columbia and in some tributaries. Upper Columbia River spring Chinook salmon and steelhead are rarely taken in ocean fisheries; most harvest of these listed species occurs in the Columbia mainstem and some tributaries. Aggregate harvest rates (from fishing in all areas) have generally been reduced from their peak periods as a result of international treaties, fisheries conservation acts, the advent of weak-stock management in the 1970s and 1980s, regional conservation goals, and the listing of many salmon ESUs and steelhead DPSs under the ESA. While fisheries do not target weak stocks of listed salmon or steelhead, listed fish are incidentally caught in fisheries directed at hatchery and unlisted wild stocks.

Hatcheries: In the Upper Columbia region, the 12 hatcheries currently producing spring Chinook salmon and steelhead are operated to mitigate for loss of habitat and for passage mortalities resulting from the Columbia River hydrosystem. These hatcheries provide valuable mitigation and/or conservation benefits but can cause substantial adverse impacts if not properly managed. The Plan describes the risks to listed fish from these hatcheries, including genetic effects that reduce fitness and survival, ecological effects such as competition and predation, facility effects on passage and water quality, mixed stock fishery effects, and masking of the true status of wild populations.

Additional Factors: The Plan considers that there could be additional factors that affect Upper Columbia River spring Chinook salmon and steelhead, including changes in estuarine habitat, global climate change, inadequacy of existing regulatory mechanisms, fluctuating ocean cycles, and predation.

Recovery Strategies and Actions

The Plan's initial approach is to target reductions in all manageable threats and limiting factors and to improve the status of all extant Upper Columbia River spring Chinook salmon and steelhead populations. As monitoring and evaluation programs improve understanding of the effectiveness of various actions and their benefits

throughout the life cycle of salmon and steelhead, adjustments may be made through the adaptive management framework described in the Plan.

The Plan describes objectives and strategies and recommends specific actions for Upper Columbia River spring Chinook salmon and steelhead recovery. Among the most significant recommendations are the following:

Habitat: The Plan includes habitat protection and restoration actions in all streams that currently support or may support (in a restored condition) listed spring Chinook salmon and steelhead in the Upper Columbia Basin. The objectives and recommended actions are derived from subbasin plans, watershed plans, the Upper Columbia Biological Strategy, the Douglas County public utility district (PUD) and Chelan County PUD Anadromous Fish Agreement and Habitat Conservation Plans (AFAHCPs), and other relicensing agreements. The Plan emphasizes actions that (1) protect existing areas where high ecological integrity and natural ecosystem processes persist; (2) restore connectivity (access) throughout the historical range, where feasible and practical; (3) protect and restore riparian habitat along spawning and rearing streams and identify long-term opportunities for riparian habitat enhancement; (4) protect and restore floodplain function and reconnection, off-channel habitat, and channel migration processes where appropriate; and (5) increase habitat diversity by rebuilding, maintaining, and adding instream structures (e.g., large woody debris or rocks) where long-term channel form and function efforts are not feasible.

Hydroelectric Operations: Upper Columbia River spring Chinook salmon and steelhead migrate through four federally owned projects and three to five projects owned by PUDs. These projects are licensed by the Federal Energy Regulatory Commission. The Plan acknowledges that hydropower strategies and actions are being implemented, reviewed, and considered in several ongoing processes, including Federal Columbia River Power System (FCRPS) ESA section 7 consultations (for the lower four Federal dams on the Columbia River), the AFAHCPs, and relicensing agreements. The Plan's recommended actions are intended to be consistent with these processes. The Plan emphasizes continued implementation of the actions identified in the AFAHCPs, which adopted a standard of no net impact (NNI) on the Upper Columbia River Spring-Run Chinook Salmon ESU and Steelhead DPS.

Harvest: Harvest objectives for treaty and non-treaty salmon and steelhead fisheries in the Columbia River Basin are set by the applicable state, tribal, and Federal agencies. Fishery objectives from McNary Dam to the mouth of the Columbia River (fishing zones 1–6) are established by state, tribal, and Federal parties in *U.S.* v. *Oregon*, 302 F. Supp. 899 (D. Or. 1969). While recognizing the role of the treaty and non-treaty co-managers, the Plan proposes that the *U.S.* v. *Oregon* parties incorporate Upper Columbia recovery goals when formulating fishery plans affecting Upper Columbia River spring Chinook salmon and steelhead. The Plan also recommends that appropriate co-managers and fishery management agencies work together with local stakeholders to develop tributary fisheries management goals and plans.

Hatcheries: The hatchery strategies and actions in the Plan are being reviewed and considered in several ongoing processes, including the Chelan County and Douglas County PUD AFAHCPs, the Grant County biological opinion, and U.S. v. Oregon. NMFS expects that the Plan's recommended goals and actions will be implemented through these ongoing processes. The Plan emphasizes that hatchery programs play an essential role in spring Chinook salmon and steelhead recovery. Among other measures, the Plan proposes that hatchery programs employ mechanisms to manage hatchery returns on spawning grounds in balance with naturally produced fish, while maintaining production levels identified in various agreements. It also proposes that, as the populations recover, hatchery programs should be modified to minimize adverse impacts of hatchery fish on naturally produced fish.

Integration: The Plan states that recovery will depend on integrating actions that address habitat, harvest, and hydroelectric operations; moreover, it emphasizes that recovery actions must be implemented at both the ESU/DPS and population scale.

Adaptive Management: Adaptive management is the process of adjusting management actions and/or directions based on new information. It requires building an evaluation method into an implementation plan, so that selection and design of future recovery actions can be adjusted depending on the results of previous actions. Adaptive management is essential to salmon recovery planning. The UCSRB is developing a monitoring and evaluation element (and associated costs) to incorporate into its adaptive management framework, which will become a part of the overall implementation plan. NMFS will continue to work with the UCSRB on its adaptive management program as appropriate during plan implementation.

Time and Cost Estimates

ESA section 4(f)(1) requires that a recovery plan include ''estimates of the time required and the cost to carry out those measures needed to achieve the Plan's goal and to achieve intermediate steps toward that goal'' (16 U.S.C. 1533[f][1]). The Plan contains an extensive list of actions that need to be undertaken to recover spring Chinook salmon and steelhead; however, there are many uncertainties involved in predicting the course of recovery and in estimating total costs. Such uncertainties include biological and ecosystem responses to recovery actions as well as long-term and future funding. The Plan states that if its recommended actions are implemented, recovery of the Upper Columbia River Spring-Run Chinook Salmon ESU and the Upper Columbia River Steelhead DPS is likely to occur within 10 to 30 years. The cost estimates cover work projected to occur within the first 10–year period. NMFS supports the Plan's determination to focus on the first 10 years of implementation, provided that, before the end of this first implementation period, specific actions and costs will be estimated for subsequent years, to achieve long-term goals and to proceed until a determination is made that listing is no longer necessary.

The estimated cost of restoring habitat for spring Chinook salmon and steelhead in the Upper Columbia Basin is approximately $296 million over the initial 10–year period. This estimate includes expenditures by local, tribal, state, and Federal governments, private business, and individuals in implementing both capital projects and non-capital work. The estimate of $296 million does not include costs associated with hatchery programs, because the implementation of hatchery actions is approved and budgeted in processes established by the Upper Columbia HCPs. These processes are consistent with this recovery plan. The cost estimate also does not include expenses associated with implementing actions within the lower Columbia River, estuary, or FCRPS, or the cost of implementing measures in the PUDs' HCPs and Settlement Agreements. Cost estimates for the estuary and FCRPS are included in two modules that NMFS developed because of the basin-wide scope and applicability of the actions to all 13 ESUs and DPSs listed as threatened or endangered in the

Columbia Basin. These modules, as well as the HCPs and Settlement Agreements, are incorporated into the Plan by reference. The modules are available on the NMFS Web site: *www.nwr.noaa.gov/Salmon-Recovery-Planning/ESA-Recovery-Plans/Other- Documents.cfm*.

The hydropower cost estimates will be updated over time, as the section 7 consultation on the remanded 2004 FCRPS BiOp is completed. The estuary recovery costs could be further refined following public comment on the module and on the ESA recovery plan for the three listed lower Columbia River ESUs and one listed lower Columbia River steelhead DPS in 2007 or early 2008. There are virtually no estimated costs for recovery actions associated with harvest to report at this time. This is because no actions are currently proposed that go beyond those already being implemented through U.S. v. Oregon and other harvest management forums. In the event that additional harvest actions are implemented through these forums, those costs will be added during the implementation phase of this recovery plan. All cost estimates will be refined and updated over time.

The Plan estimates it may cost a total of $10 million ($1 million per year) to cover state, tribal, and local agency and organization staffing costs during the first 10 years of plan implementation, and it is conceivable that this level of effort will need to continue for the Plan's duration. Also, continued actions in the management of habitat, hatcheries, and harvest, including both capital and non-capital costs, will likely warrant additional expenditures beyond the first 10 years. Although it is not practicable to accurately estimate the total cost of recovery, it appears that most of the costs will occur in the first 10 years. Annual costs are expected to be lower for the remaining years, so that the total for the entire period (years 11–30) may possibly range from $150 million to $200 million.

Periodic Reviews

In accordance with its responsibilities under ESA section 4(c)(2), NMFS will conduct status reviews of the listed Upper Columbia River Spring-Run Chinook Salmon ESU and Upper Columbia River Steelhead DPS at least once every 5 years to evaluate their status and determine whether the ESU or DPS should be removed from the list or changed in status. Such evaluations will take into account the following:

- The biological recovery criteria (ICTRT 2007) and listing factor (threats) criteria described in the Plan.
- The management programs in place to address the threats.
- Principles presented in the Viable Salmonid Populations paper (McElhany *et al.*, 2000).
- Best available information on population and ESU/DPS status and new advances in risk evaluation methodologies.
- Other considerations, including: the number and status of extant spawning groups; linkages and connectivity among populations; the diversity of life history and phenotypes expressed; and considerations regarding catastrophic risk.
- Principles laid out in NMFS' Hatchery Listing Policy (70 FR 37204, June 28, 2005).

Conclusion

NMFS has reviewed the Plan, the public comments, and the conclusions of the ICTRT from its reviews of the Plan. Based on that review, NMFS concludes that the Plan meets the requirements in section 4(f) of the ESA for developing a recovery plan.

Literature Cited

Interior Columbia Technical Recovery Team. 2005. Updated population delineation in the Interior Columbia Basin. National Marine Fisheries Service, Northwest Fisheries Science Center. Memorandum. May 11, 2005.

Interior Columbia Technical Recovery Team. 2007. Viability criteria for application to Interior Columbia Basin salmonid ESUs. National Marine Fisheries Service, Northwest Fisheries Science Center. March 2007.

McElhany, P., M. H. Ruckelshaus, M. J. Ford, T. C. Wainwright, and E. P. Bjorkstedt. 2000. Viable salmon populations and the recovery of evolutionarily significant units. U.S. Dept. of Commerce, NOAA Tech. Memo., NMFS NWFSC 42, 156 p.

Authority: 16 U.S.C. 1531 *et seq.*

Dated: October 2, 2007.

Angela Somma,

Chief, Endangered Species Division, Office of Protected Resources, National Marine Fisheries Service.

[FR Doc. E7–19812 Filed 10–5–07; 8:45 am]

BILLING CODE 3510–22–S

DEPARTMENT OF COMMERCE

National Oceanic and Atmospheric Administration

RIN 0648–XC75

Fisheries of the Caribbean, Gulf of Mexico, and South Atlantic; Amendment 3 to the Fishery Management Plan for the Spiny Lobster Fishery of Puerto Rico and the U.S. Virgin Islands and Amendment 4 to the Reef Fish Fishery Management Plan of Puerto Rico and the U.S. Virgin Islands

AGENCY: National Marine Fisheries Service (NMFS), National Oceanic and Atmospheric Administration (NOAA), Commerce.

ACTION: Notice; intent to prepare a draft environmental impact statement (DEIS); scoping meetings; request for comments.

SUMMARY: The Caribbean Fishery Management Council (Council)in conjunction with NMFS intends to prepare a DEIS to describe and analyze management alternatives to be included in a joint amendment to the Fishery Management Plan (FMP) for the Spiny Lobster Fishery of Puerto Rico and the U.S. Virgin Islands (USVI) and the FMP for the Reef Fish Fishery of Puerto Rico and the USVI. These alternatives will consider measures to implement escape vents in the trap fishery sector of both fisheries. The purpose of this notice of intent is to solicit public comments on the scope of issues to be addressed in the DEIS.

DATES: Written comments on the scope of issues to be addressed in the DEIS must be received by the Council or NMFS (see **ADDRESSES** below) by November 8, 2007. A series of scoping meetings will be held in October 2007. See **SUPPLEMENTARY INFORMATION** below for the specific dates, times, and locations of the scoping meetings.

ADDRESSES: You may submit comments on the proposed rule by any of the following methods:

- E-mail: *0648–XC75.Proposed@noaa.gov*. Include in the subject line the following document identifier: 0648–XC75.
- Mail: Jason Rueter, Southeast Regional Office, NMFS, 263 13th Avenue South, St. Petersburg, FL 33701.
- Fax: 727–824–5308.
- Mail: Graciela Garcia-Moliner, Caribbean Fishery Management Council, 268 Muñoz Rivera Avenue, Suite 1108, San Juan, PR 00918–25772203;
- Fax: 787–766–6239.
- E-mail: *Graciela.Garcia-Moliner@noaa.gov*.

FOR FURTHER INFORMATION CONTACT: Graciela Garcia-Moliner; phone: 787–766–5927; fax: 787–766–6239; e-mail: *Graciela.Garcia-Moliner@noaa.gov*; or Jason Rueter; phone: 727–824–5350; fax: 727–824–5308; or e-mail: *Jason.Rueter@noaa.gov*.

SUPPLEMENTARY INFORMATION: Many species of fish in the reef fish fishery in Puerto Rico and the USVI are believed to be overexploited, largely due to trap fishing and bycatch associated with this fishery. Landings from the trap fishery have continuously decreased since 1990 in Puerto Rico; species composition has changed; and size frequency of some fish has decreased over the last 10 years. These effects have been attributed to excessive trap fishing effort, lack of compliance with trap construction requirements (i.e., fishers often do not use the required biodegradable fasteners on trap doors), use of other gears by commercial fishers (e.g., gill nets), and the lack of escape panels in traps which would allow smaller fishes to escape, resulting in high mortality of juveniles and a loss of long-term potential yield.

According to the NMFS Report on the Status of the U.S. Fisheries for 2006, five stocks are undergoing overfishing, four are overfished, and two are approaching an overfishing condition. The five stocks undergoing overfishing are Grouper Unit 1 (Nassau grouper), Grouper Unit 4 (red, yellowedge, misty, tiger, and yellowfin grouper), Snapper Unit 1 (silk, blackfin, black, and vermilion snapper), parrotfishes, and queen conch. The four stocks that are overfished are Grouper Unit 1 (Nassau grouper), Grouper Unit 2 (goliath grouper), Grouper Unit 4 (red, yellowedge, misty, tiger, and yellowfin grouper), and queen conch. The two stocks approaching an overfished condition are Snapper Unit 1 (silk, blackfin, black, and vermilion snapper) and parrotfishes. All of the finfish species and spiny lobster are susceptible to trap capture at some life history stage, particularly the juvenile stage.

Under current fishing practices, bycatch and the associated mortality of bycatch is not expected to be reduced sufficiently in the reef fish or spiny lobster trap fisheries. Without a reduction in bycatch, those stocks experiencing overfishing may become overfished, and those stocks overfished may not meet the goals of the rebuilding plan set forth in the Sustainable Fisheries Act Amendment of 2005. Therefore, the use of escape panels as a management tool is proposed in this amendment to help achieve the necessary reductions in fishing mortality among the species harvested by traps.

The Council in conjunction with NMFS will develop a DEIS to describe and analyze management alternatives to implement escape panels in the trap sector of both fisheries. The DEIS will provide updates to the best available scientific information regarding the reef fish complex and the spiny lobster stock, and based on the information, the Council, in conjunction with NMFS, will determine what actions and alternatives are necessary to protect reef fishes and spiny lobster. Those alternatives may include, but are not limited to: a ''no action'' alternative regarding the fisheries, which would not require escape vents; alternatives to require one escape panel of various sizes and shapes in traps; and an alternative requiring two escape panels of various sizes and shapes.

In accordance with NOAA's Administrative Order NAO 216–6, Section 5.02(c), the Council, in conjunction with NMFS, has identified this preliminary range of alternatives as a means to initiate discussion for scoping purposes only. This may not represent the full range of alternatives that eventually will be evaluated by the Council and NMFS.

Once the Council and NMFS completes the DEIS associated with the amendment to the Caribbean reef fish and spiny lobster FMPs, NMFS will submit the DEIS for filing with the Environmental Protection Agency (EPA). The EPA will publish a notice of availability of the DEIS for public comment in the **Federal Register**. The DEIS will have a 45-day comment period. This procedure is pursuant to regulations issued by the Council on Environmental Quality (CEQ) for implementing the procedural provisions of the National Environmental Policy Act (NEPA; 40 CFR parts 1500–1508) and to NOAA's Administrative Order 216–6 regarding NOAA's compliance with NEPA and the CEQ regulations.

The Council and NMFS will consider public comments received on the DEIS in developing the final environmental impact statement (FEIS) and before adopting final management measures for the amendment. The Council will submit both the final joint amendment and the supporting FEIS to NMFS for review under the Magnuson-Stevens Fishery Conservation and Management Act, i.e., Secretarial review.

NMFS will announce, through a notice published in the **Federal Register**, the availability of the final joint amendment for public review during the Secretarial review period. During Secretarial review, NMFS will also file the FEIS with the EPA for a final 30-day public comment period. This comment period will be concurrent with the Secretarial review period and will end prior to final agency action to approve, disapprove, or partially approve the final joint amendment.

NMFS will announce, through a notice published in the **Federal Register**, all public comment periods on the final joint amendment, its proposed implementing regulations, and its associated FEIS. NMFS will consider all public comments received during the Secretarial review period, whether they are on the final amendment, the proposed regulations, or the FEIS, prior to final agency action.

Scoping Meeting Dates, Times, and Locations

All scoping meetings are scheduled to be held from 7 p.m. to 10 p.m. The meetings will be physically accessible to people with disabilities. Request for sign language interpretation or other auxiliary aids should be directed to the Council (see **ADDRESSES**).

October 16—Windward Passage Hotel, Charlotte Amalie, St. Thomas, USVI.

October 17—Buccaneer Hotel, Christiansted, St Croix, USVI.

October 23—Pierre Hotel, De Diego Avenue, San Juan, PR.

October 24—Ponce Golf and Casino Resort, 1150 Caribe Avenue, Ponce, PR.

October 25—Mayaguez Holiday Inn, 2701 Highway 12, Mayaguez, PR.

Authority: 16 U.S.C. 1801 *et seq.*

Dated: October 2, 2007.

Emily H. Menashes,

Acting Director, Office of Sustainable Fisheries, National Marine Fisheries Service.

[FR Doc. E7–19811 Filed 10–5–07; 8:45 am]

BILLING CODE 3510–22–S

DEPARTMENT OF COMMERCE

National Oceanic and Atmospheric Administration

Meeting: Climate Change Science Program (CCSP) Product Development Committee (CPDC) for Synthesis and Assessment Product 3.3

AGENCY: Office of Oceanic and Atmospheric Research (OAR), National Oceanic and Atmospheric Administration (NOAA), Department of Commerce (DOC).

ACTION: Notice of open meeting.

SUMMARY: The Climate Change Science Program (CCSP) Product Development Committee for Synthesis and Assessment Product 3.3 (CPDC–S&A

3.3) was established by a Decision Memorandum dated October 17, 2006. CPDC–S&A 3.3 is the Federal Advisory Committee charged with responsibility to develop a draft Synthesis and Assessment Product that addresses CCSP Topic 3.3: ''Weather and Climate Extremes in a Changing Climate''.

Place: The meeting will be held at the National Climatic Data Center, 151 Patton Ave., Asheville, North Carolina, 28801.

Time and Date: The meeting will convene at 8:30 a.m. on Monday, October 22, 2007 and adjourn early afternoon on October 24, 2007. Meeting information will be available online on the CPDC–S&A 3.3 Web site (*http://www.climate.noaa.gov/index.jsp?pg=./ccsp/33.jsp*). Please note that meeting location, times, and agenda topics described below are subject to change.

Status: The meeting will be open to public participation and will include a 30-minute public comment period on October 22 from 8:30 a.m. to 9 a.m. (check Web site to confirm this time and the room in which the meeting will be held). The CPDC—S&A 3.3 expects that public statements presented at its meetings will not be repetitive of previously submitted verbal or written statements. In general, each individual or group making a verbal presentation will be limited to a total time of five (5) minutes. Written comments (at least 35 copies) should be received by the CPDC—S&A 3.3 Designated Federal Official (DFO) by October 15, 2007 to provide sufficient time for review. Written comments received after October 15 will be distributed to the CPDC—S&A 3.3, but may not be reviewed prior to the meeting date. Seats will be available to the public on a first-come, first-served basis.

Matters To Be Considered: The meeting will (1) formulate responses to the comments received during the official Public Comment Period on the Second Draft of Synthesis and Assessment Product 3.3 and revise the Second Draft accordingly; (2) finalize plans for completion and submission of the Third Draft of Synthesis and Assessment Product 3.3 to the Climate Change Science Program Office.

FOR FURTHER INFORMATION CONTACT: Dr. Christopher D. Miller, CPDC—S&A 3.3 DFO and the Program Manager, NOAA/OAR/Climate Program Office, Climate Change Data and Detection Program Element, 1315 East-West Highway, Room 12239, Silver Spring, Maryland 20910; telephone 301–734–1241, e-mail: *Christopher.D.Miller@noaa.gov.*

Dated: October 2, 2007.

Mark E. Brown,

Chief Financial Officer, Office of Oceanic and Atmospheric Research, National Oceanic and Atmospheric Administration.

[FR Doc. E7–19756 Filed 10–5–07; 8:45 am]

BILLING CODE 3510–KB–P

DEPARTMENT OF COMMERCE

National Oceanic and Atmospheric Administration

RIN: 0648–XD17

New England Fishery Management Council; Public Meeting

AGENCY: National Marine Fisheries Service (NMFS), National Oceanic and Atmospheric Administration (NOAA), Commerce.

ACTION: Notice of public meetings.

SUMMARY: The New England Fishery Management Council (Council) is scheduling public meetings of its Monkfish Advisory Panel and its Oversight Committee, in October, 2007, to consider actions affecting New England fisheries in the exclusive economic zone (EEZ). Recommendations from these groups will be brought to the full Council for formal consideration and action, if appropriate.

DATES: These meetings will be held on Tuesday, October 23, at 9 a.m. and on Wednesday, October 24, at 9:30 a.m.

ADDRESSES: These meetings will be held at the Holiday Inn, One Newbury Street, Peabody, MA 01960; telephone: (978) 535–4600; fax: (978) 535–8238.

Council address: New England Fishery Management Council, 50 Water Street, Mill 2, Newburyport, MA 01950.

FOR FURTHER INFORMATION CONTACT: Paul J. Howard, Executive Director, New England Fishery Management Council; telephone: (978) 465–0492.

SUPPLEMENTARY INFORMATION:

1. Tuesday, October 23, 2007; Monkfish Advisory Panel meeting.

The Advisory Panel will review the analysis of alternatives under consideration in Framework 5 to the Monkfish FMP and make recommendations on preferred alternatives to the Monkfish Committee and New England and Mid-Atlantic Councils. Framework 5 alternatives will address changes to the biological reference points (as recommended by the recent stock assessment workshop), days-at-sea (DAS) carryover limits, monkfish landings under the 3-hour gillnet rule, Mid-Atlantic/Southern New England area large-mesh monkfish incidental catch limits, and the requirement to obtain a monkfish Letter of Authorization to fish in the northern management area.

2. Wednesday, October 24, 2007; Monkfish Oversight Committee meeting.

The Committee will review the analysis of alternatives under consideration in Framework 5 to the Monkfish FMP and consider the recommendations of the Monkfish Advisory Panel as well as public comment, and make recommendations on preferred alternatives to the New England and Mid-Atlantic Councils. Framework 5 alternatives will address changes to the biological reference points (as recommended by the recent stock assessment workshop), DAS carryover limits, monkfish landings under the 3-hour gillnet rule, Mid-Atlantic/Southern New England area large-mesh monkfish incidental catch limits, and the requirement to obtain a monkfish Letter of Authorization to fish in the northern management area.

Although non-emergency issues not contained in this agenda may come before these groups for discussion, those issues may not be the subject of formal action during these meetings. Action will be restricted to those issues specifically listed in this notice and any issues arising after publication of this notice that require emergency action under section 305(c) of the Magnuson-Stevens Act, provided the public has been notified of the Council's intent to take final action to address the emergency.

Special Accommodations

These meetings are physically accessible to people with disabilities. Requests for sign language interpretation or other auxiliary aids should be directed to Paul J. Howard, Executive Director, at (978) 465–0492, at least 5 days prior to the meeting date.

Authority: 16 U.S.C. 1801 *et seq.*

Dated: October 3, 2007.

Tracey L. Thompson,

Acting Director, Office of Sustainable Fisheries, National Marine Fisheries Service.

[FR Doc. E7–19809 Filed 10–5–07; 8:45 am]

BILLING CODE 3510–22–S

DEPARTMENT OF COMMERCE

National Oceanic and Atmospheric Administration

RIN 0648–XD18

Pacific Fishery Management Council; Public Meetings

AGENCY: National Marine Fisheries Service (NMFS), National Oceanic and Atmospheric Administration (NOAA), Commerce.

ACTION: Notice of a public meeting.

SUMMARY: The Pacific Fishery Management Council's (Council) Salmon Technical Team (STT), Scientific and Statistical Committee (SSC) Salmon Subcommittee, and Model Evaluation Workgroup (MEW) will hold a joint work session to review proposed salmon methodology changes, which is open to the public.

DATES: The work session will be held Wednesday, October 24, 2007, from 10 a.m. to 5 p.m. and Thursday, October 25, 2007, from 9 a.m. to 4 p.m.

ADDRESSES: The work session will be held at the Pacific Fishery Management Council, 7700 NE Ambassador Place, Suite 101, Portland, OR 97220–1384; telephone: (503) 820–2280.

FOR FURTHER INFORMATION CONTACT: Mr. Chuck Tracy, Salmon Management Staff Officer, Pacific Fishery Management Council; telephone: (503) 820–2280.

SUPPLEMENTARY INFORMATION: The purpose of the work session is to brief the STT and SSC Salmon Subcommittee on proposed changes to methods and standards used to manage ocean salmon fisheries, review a genetic stock identification research and exempted fishing permit proposal and, to review proposed modifications to the Chinook and Coho Fishery Regulation Assessment Models (FRAM).

Although non-emergency issues not contained in the meeting agenda may come before the STT, SSC Salmon Subcommittee, and MEW for discussion, those issues may not be the subject of formal action during this meeting. Action will be restricted to those issues specifically listed in this notice and any issues arising after publication of this notice that require emergency action under Section 305(c) of the Magnuson-Stevens Fishery Conservation and Management Act, provided the public has been notified of the intent to take final action to address the emergency.

Special Accommodations

This meeting is physically accessible to people with disabilities. Requests for sign language interpretation or other auxiliary aids should be directed to Ms. Carolyn Porter at (503) 820–2280 at least 5 days prior to the meeting date.

Dated: October 3, 2007.

Tracey L. Thompson,

Acting Director, Office of Sustainable Fisheries, National Marine Fisheries Service.

[FR Doc. E7–19810 Filed 10–5–07; 8:45 am]

BILLING CODE 3510–22–S

DEPARTMENT OF COMMERCE

Patent and Trademark Office

Submission for OMB Review; Comment Request

The United States Patent and Trademark Office (USPTO) will submit to the Office of Management and Budget (OMB) for clearance the following proposal for collection of information under the provisions of the Paperwork Reduction Act (44 U.S.C. Chapter 35).

Agency: United States Patent and Trademark Office (USPTO), Department of Commerce.

Title: United States Patent Applicant Survey.

Form Number(s): None. The surveys contained in this information collection do not have USPTO form numbers assigned to them. When the surveys are approved, they will carry the OMB Control Number and the date on which OMB's approval of the information collection expires.

Agency Approval Number: 0651–0052.

Type of Request: Extension of a currently approved collection.

Burden: 140 hours annually.

Number of Respondents: 400 responses per year with an estimated 267 responses filed electronically.

Average Hours Per Response: The USPTO estimates that it will take the public 30 minutes (0.50 hours) to complete the surveys, with the exception of the surveys for the independent inventors, which are estimated to take 15 minutes (0.25 hours) to complete. This includes the time to gather the necessary information, respond to the surveys, and submit them to the USPTO. The USPTO believes that it will take the same amount of time to respond to the surveys, whether they are completed online or mailed to the USPTO.

Needs and Uses: The USPTO developed the United States Patent Applicant Survey as part of a continuing effort to better predict the future growth of patent application filings by understanding applicant intentions. The main purpose of this survey is to determine the number of application filings that the USPTO can expect to receive over the next three years from patent-generating entities, ranging from large domestic corporations to independent inventors. The USPTO also uses this survey in response to the Senate Appropriations Report 106–404 (September 8, 2000), which directed the USPTO to ''develop a workload forecast with advice from a representative sample of industry and the inventor community.'' There are two versions of the survey: one for large domestic corporations and small and medium-sized businesses and one for universities, non-profit research organizations, and independent inventors. The large domestic corporations, small and medium-sized businesses, universities, non-profit research organizations, and independent inventors responding to these surveys will provide the USPTO with the number of application filings that they plan to submit, in addition to providing general feedback concerning industry trends and the survey itself. The USPTO will use this feedback to anticipate demand and estimate future revenue flow more reliably; to identify input and output triggers and allocate resources to meet and understand customer needs; and to reassess output and capacity goals and re-align organization quality control measures with applicant demand by division.

Affected Public: Businesses or other for-profits and not-for-profit institutions.

Frequency: On occasion.

Respondent's Obligation: Voluntary.

OMB Desk Officer: David Rostker, (202) 395–3897.

Copies of the above information collection proposal can be obtained by any of the following:

E-mail: Susan.Fawcett@uspto.gov. Include ''0651–0052 copy request'' in the subject line of the message.

Fax: 571–273–0112, marked to the attention of Susan K. Fawcett.

Mail: Susan K. Fawcett, Records Officer, Office of the Chief Information Officer, Customer Information Services Group, Public Information Services Division, U.S. Patent and Trademark Office, P.O. Box 1450, Alexandria, VA 22313–1450.

Written comments and recommendations for the proposed information collection should be sent on or before November 8, 2007 to David Rostker, OMB Desk Officer, Room 10202, New Executive Office Building, 725 17th Street, NW., Washington, DC 20503.

Dated: October 2, 2007.

Susan K. Fawcett,

Records Officer, USPTO, Office of the Chief Information Officer, Customer Information Services Group, Public Information Services Division.

[FR Doc. E7–19793 Filed 10–5–07; 8:45 am]

BILLING CODE 3510–16–P

CORPORATION FOR NATIONAL AND COMMUNITY SERVICE

Proposed Information Collection; Comment Request

AGENCY: Corporation for National and Community Service.

ACTION: Notice.

SUMMARY: The Corporation for National and Community Service (hereinafter the ''Corporation''), as part of its continuing effort to reduce paperwork and respondent burden, conducts a pre-clearance consultation program to provide the general public and Federal agencies with an opportunity to comment on proposed and/or continuing collections of information in accordance with the Paperwork Reduction Act of 1995 (PRA95) (44 U.S.C. 3506(c)(2)(A)). This program helps to ensure that requested data can be provided in the desired format, reporting burden (time and financial resources) is minimized, collection instruments are clearly understood, and the impact of collection requirement on respondents can be properly assessed.

Currently, the Corporation is soliciting comments concerning the proposed renewal of its AmeriCorps*VISTA Project Application and Instructions (OMB Control Number 3045–0038),

This reinstatement with changes reflects the Corporation's intent to modify selected sections of the collection instrument to better capture appropriate information for use in selecting organizations to serve as VISTA sponsors, while reducing applicant burden.

DATES: Written comments must be submitted to the office listed in the **ADDRESSES** section December 10, 2007.

ADDRESSES: You may submit comments, identified by the title of the information collection activity, by any of the following methods:

(1) By mail sent to: Corporation for National and Community Service, Attn. Paul Davis, Director of Program Development, Room 9107, 1201 New York Avenue, NW., Washington, DC 20525.

(2) By hand delivery or by courier to the Corporation's mailroom at Room 8100 at the mail address given in paragraph (1) above, between 9 a.m. and 4 p.m. Monday through Friday, except Federal holidays.

(3) By fax to: (202) 565–2789, Attention Mr. Paul Davis, Director of Program Management.

(4) Electronically through the Corporation's e-mail address system: *pdavis@cns.gov*.

FOR FURTHER INFORMATION CONTACT: Paul Davis, (202) 606–6608 or by e-mail at *pdavis@cns.gov*.

SUPPLEMENTARY INFORMATION: The Corporation is particularly interested in comments which:

- Evaluate whether the proposed collection of information is necessary for the proper performance of the functions of the Corporation, including whether the information will have practical utility;
- Evaluate the accuracy of the agency's estimate of the burden of the proposed collection of information, including the validity of the methodology and assumptions used;
- Enhance the quality, utility and clarity of the information to be collected; and,
- Minimize the burden of the collection of information on those who are to respond, including through the use of appropriate automated, electronic, mechanical, or other technological collection techniques or other forms of information technology (e.g., permitting electronic submissions of responses).

Background

The AmeriCorps*VISTA Project Application and Instructions is used by the Corporation in the selection of VISTA sponsors and in the approval of both new and renewing VISTA projects. The information collection consists of a brief Concept Paper, and, if the Concept Paper is approved, a full application including budget.

Current Action

The Corporation seeks to revise the previously used Project Application to: (a) Better align the information requested on the Concept Paper and the Application; and (b) simplify the project plan while continuing to provide a robust tool for evaluating project performance.

Type of Review: Renewal.

Agency: Corporation for National and Community Service.

Title: AmeriCorps*VISTA Project Application and Instructions.

OMB Number: 3045–0038.

Agency Number: None.

Affected Public: AmeriCorps*VISTA project applicants and sponsoring organizations seeking project renewal.

Total Respondents: 3,200 for the concept paper; 1,000 for the full application.

Frequency: One time.

Average Time per Response: 2 hours for Concept Paper; 15 hours for application.

Estimated Total Burden Hours: 21,400 hours.

Total Burden Cost (capital/startup): None.

Total Burden Cost (operating/maintenance): None.

Comments submitted in response to this notice will be summarized and/or included in the request for Office of Management and Budget approval of the information collection request; they will also become a matter of public record.

Dated: October 1, 2007.

Jean Whaley,

*Director, AmeriCorps*VISTA.*

[FR Doc. E7–19736 Filed 10–5–07; 8:45 am]

BILLING CODE 6050–$$–P

DEPARTMENT OF DEFENSE

Notice of Advisory Committee Closed Meeting

AGENCY: Department of Defense.

ACTION: Notice of Advisory Committee Closed Meeting.

SUMMARY: Pursuant to the Federal Advisory Committee Act of 1972 (5 U.S.C. App 2, section 1), the Sunshine in the Government Act of 1976 (5 U.S.C. 552b), and 41 CFR 102–3.150, the Department of Defense announces the following closed meeting notice pertaining to the following federal advisory committee. Due to events beyond the control of the Designated Federal Officer and the Transformation Advisory Group, the Committee was unable to publish its meeting notice in the **Federal Register** for the 15-calendar days required by 41 CFR 102–3.150(a). Accordingly, the Committee Management Officer for the Department of Defense, pursuant to 41 CFR 102–3.150(b), waives the 15-calendar day notification requirement

Name of Committee: Transformation Advisory Group.

Date: October 18, 2007; October 19, 2007.

Time: October 18, 2007–9 a.m. to 5 p.m.
October 19, 2007–9 a.m. to 5 p.m.

Location: Military Sealift Command Tower Conference Center, Bldg. 157, 914 Charles Morris Ct. SE., Washington Navy Yard, DC 20398.

Purpose of the Meeting: The purpose of the meeting is to obtain, review and evaluate

information related to scientific, technical and policy-related issues for the nation's joint enterprise, and U.S. Joint Forces Command with emphasis on how these issues relate to the shaping of the command's efforts today and in the future.

Agenda: Topics include: Future Joint Force Implications, Anticipatory Transformation, Innovation, Unified Action, Joint Capability Portfolio Management Process and Joint Capabilities to support Joint Operations.

Meeting Accessibility: Pursuant to 5 U.S.C. 552b, and 41 CFR 102–3.155, the Department of Defense has determined that the meeting shall be closed to the public. Per delegated authority by the Chairman, Joint Chiefs of Staff, LTG John R. Wood, Deputy Commander, U.S. Joints Forces Command in consultation with his legal advisor, has determined in writing that the public interest requires that all sessions of this meeting be closed to the public because they will be concerned with matters listed in section 552b(c)(1) of Title 5 U.S.C.

Written Statements: Pursuant to 41 CFR 102–3.105(j) and 102–3.140, the public or interested organizations may submit written statements to the membership of the Transformation Advisory Group at any time or in response to the stated agenda of a planned meeting. Written statements should be submitted to the Transformation Advisory Group's Designated Federal Officer; the Designated Federal Officer's contact information can be obtained from the GSA's FACA Database—*https://www.fido.gov/facadatabase/public.asp.* Written statements that do not pertain to a scheduled meeting of the Transformation Advisory Group may be submitted at any time. However, if individual comments pertain to a specific topic being discussed at a planned meeting then these statements must be submitted no later than five business days prior to the meeting in question. The Designated Federal Officer will review all submitted written statements and provide copies to all the committee members.

For Further Information Contact: Ms. Tammy R. Van Dame, Designated Federal Officer, (757) 836–5365, 1562 Mitscher Ave., Suite 200, Norfolk, VA 23551–2488, *tammy.vandame@jfcom.mil.*

Supplementary Information: Mr. Floyd March, Joint Staff, (703) 697–0610.

Dated: October 1, 2007.

C.R. Choate,

Alternate OSD Federal Register Liaison Officer, Department of Defense.

[FR Doc. 07–4965 Filed 10–5–07; 8:45 am]

BILLING CODE 5001–06–M

DEPARTMENT OF EDUCATION

Notice of Proposed Information Collection Requests

AGENCY: Department of Education.

SUMMARY: The IC Clearance Official, Regulatory Information Management Services, Office of Management, invites comments on the proposed information collection requests as required by the Paperwork Reduction Act of 1995.

DATES: Interested persons are invited to submit comments on or before December 10, 2007.

SUPPLEMENTARY INFORMATION: Section 3506 of the Paperwork Reduction Act of 1995 (44 U.S.C. Chapter 35) requires that the Office of Management and Budget (OMB) provide interested Federal agencies and the public an early opportunity to comment on information collection requests. OMB may amend or waive the requirement for public consultation to the extent that public participation in the approval process would defeat the purpose of the information collection, violate State or Federal law, or substantially interfere with any agency's ability to perform its statutory obligations. The IC Clearance Official, Regulatory Information Management Services, Office of Management, publishes that notice containing proposed information collection requests prior to submission of these requests to OMB. Each proposed information collection, grouped by office, contains the following: (1) Type of review requested, e.g. new, revision, extension, existing or reinstatement; (2) Title; (3) Summary of the collection; (4) Description of the need for, and proposed use of, the information; (5) Respondents and frequency of collection; and (6) Reporting and/or Recordkeeping burden. OMB invites public comment.

The Department of Education is especially interested in public comment addressing the following issues: (1) Is this collection necessary to the proper functions of the Department; (2) will this information be processed and used in a timely manner; (3) is the estimate of burden accurate; (4) how might the Department enhance the quality, utility, and clarity of the information to be collected; and (5) how might the Department minimize the burden of this collection on the respondents, including through the use of information technology.

Dated: October 2, 2007.

Angela C. Arrington,

IC Clearance Official, Regulatory Information Management Services, Office of Management.

Federal Student Aid

Type of Review: Extension.

Title: Lender's Application for Payment of Insurance Claim, ED Form 1207.

Frequency: On Occasion.

Affected Public: State, Local, or Tribal Gov't, SEAs or LEAs; Businesses or other for-profit.

Reporting and Recordkeeping Hour Burden:

Responses: 51.

Burden Hours: 14.

Abstract: The ED Form 1207—Lender's Application for Payment of Insurance Claim is completed for each borrower for whom the lender is filing a Federal claim. Lenders must file for payment within 90 days of the default, depending on the type of claim filed.

Requests for copies of the proposed information collection request may be accessed from *http://edicsweb.ed.gov*, by selecting the ''Browse Pending Collections'' link and by clicking on link number 3488. When you access the information collection, click on ''Download Attachments'' to view. Written requests for information should be addressed to U.S. Department of Education, 400 Maryland Avenue, SW. Potomac Center, 9th Floor, Washington, DC 20202–4700. Requests may also be electronically mailed to *ICDocketMgr@ed.gov* or faxed to 202–245–6623. Please specify the complete title of the information collection when making your request.

Comments regarding burden and/or the collection activity requirements should be electronically mailed to *ICDocketMgr@ed.gov*. Individuals who use a telecommunications device for the deaf (TDD) may call the Federal Information Relay Service (FIRS) at 1–800–877–8339.

[FR Doc. E7–19819 Filed 10–5–07; 8:45 am]

BILLING CODE 4000–01–P

DEPARTMENT OF EDUCATION

Membership of the Performance Review Board

AGENCY: Department of Education.

ACTION: Notice of Membership of the Performance Review Board.

SUMMARY: This notice announces the Secretary's appointment of the Department's Performance Review Board (PRB), consistent with 5 U.S.C. 4314(c)(4). The PRB reviews senior executives' performance appraisals and makes recommendations to the Secretary about the executives' ratings, as well as performance awards, including performance-based pay adjustments.

Membership

The members of the PRB are: Michell Clark (Chair), Sue Betka, Carol Cichowski, Robert S. Eitel, Harry Feely, Patty Guard, William Hamel, Danny Harris, Troy Justesen, Philip Link, Phil Maestri, Stephanie Monroe, Marianna O'Brien, Tom Skelly, Linda Stracke, Wendy Tada, Ricky Takai, and Winona Varnon. Alternates members are: Susan

Craig, Chris Marston, Cheryl Oldham, Lizanne Stewman, and Jana Toner.

FOR FURTHER INFORMATION CONTACT: Chris Marston, Deputy Assistant Secretary for Management, U.S. Department of Education, 400 Maryland Avenue, SW., room 2W307, LBJ, Washington, DC 20202. Telephone: (202) 401–5846.

If you use a telecommunications device for the deaf (TDD), you may call the Federal Relay Service (FRS) at 1–800–877–8339.

Individuals with disabilities may obtain this document in an alternative format (e.g., Braille, large print, audiotape, or computer diskette) on request to the contact person listed under **FOR FURTHER INFORMATION CONTACT**.

Electronic Access to This Document

You may view this document, as well as all other Department of Education documents published in the **Federal Register**, in text or Adobe Portable Document Format (PDF) on the Internet at the following site: *http://www.ed.gov/news/fedregister.*

To use PDF, you must have Adobe Acrobat Reader, which is available free at this site. If you have questions about using PDF, call the U.S. Government Printing Office (GPO), toll free, at 1–888–293–6498; or in the Washington, DC area at (202) 512–1530.

Note: The official version of this document is the document published in the **Federal Register**. Free Internet access to the official edition of the **Federal Register** and the Code of Federal Regulations is available on GPO Access at: *http://www.gpoaccess.gov/nara/index.html.*

Dated: October 2, 2007.

Margaret Spellings,

Secretary of Education.

[FR Doc. E7–19827 Filed 10–5–07; 8:45 am]

BILLING CODE 4000–01–P

DEPARTMENT OF ENERGY

Federal Energy Regulatory Commission

[Docket No. EL07–103–000]

California Department of Water Resources; Notice of Filing

September 28, 2007.

Take notice that on September 18, 2007, pursuant to Rule 207 of the Rules of Practice and Procedure of the Federal Energy Regulatory Commission (FERC or Commission), 18 CFR 385.207 and 18 CFR 381.108, the California Department of Water Resources (CDWR) filed a petition for declaratory order finding that the Commission does not have exclusive jurisdiction over the claims now pending in arbitration between CDWR and Sempra Generation; and confirming that FERC would not, in the circumstances presented, exercise primary jurisdiction over those claims.

Any person desiring to intervene or to protest this filing must file in accordance with Rules 211 and 214 of the Commission's Rules of Practice and Procedure (18 CFR 385.211, 385.214). Protests will be considered by the Commission in determining the appropriate action to be taken, but will not serve to make protestants parties to the proceeding. Any person wishing to become a party must file a notice of intervention or motion to intervene, as appropriate. Such notices, motions, or protests must be filed on or before the comment date. On or before the comment date, it is not necessary to serve motions to intervene or protests on persons other than the Applicant.

The Commission encourages electronic submission of protests and interventions in lieu of paper using the ''eFiling'' link at *http://www.ferc.gov.* Persons unable to file electronically should submit an original and 14 copies of the protest or intervention to the Federal Energy Regulatory Commission, 888 First Street, NE., Washington, DC 20426.

This filing is accessible on-line at *http://www.ferc.gov,* using the ''eLibrary'' link and is available for review in the Commission's Public Reference Room in Washington, DC. There is an ''eSubscription'' link on the Web site that enables subscribers to receive e-mail notification when a document is added to a subscribed docket(s). For assistance with any FERC Online service, please e-mail *FERCOnlineSupport@ferc.gov,* or call (866) 208–3676 (toll free). For TTY, call (202) 502–8659.

Comment Date: 5 p.m. Eastern Time on October 9, 2007.

Kimberly D. Bose,

Secretary.

[FR Doc. E7–19787 Filed 10–5–07; 8:45 am]

BILLING CODE 6717–01–P

DEPARTMENT OF ENERGY

Federal Energy Regulatory Commission

[Docket Nos. EL07–104–000; EC07–134–000]

FPL Energy Mower County, LLC; FPL Energy Oliver Wind, LLC; FPL Energy Oliver Wind II, LLC ; Logan Wind Energy, LLC; Peetz Table Wind Energy, LLC; Peetz Logan Interconnect, LLC; Notice of Filing

September 28, 2007.

Take notice that on September 24, 2007, pursuant to section 203 of the Federal Power Act and Part 33 of the Commission's regulations, FPL Energy Mower County, LLC, FPL Energy Oliver Wind, LLC, FPL Energy Oliver Wind II, LLC, Logan Wind Energy, LLC, Peetz Table Wind Energy, LLC and Peetz Logan Interconnect, LLC (Applicants), filed an application for authorization for indirect upstream disposition of their jurisdictional facilities in connection with the issuance of new ownership interests in Northern Frontier Wind, LLC to Passive Investors. Applicants also seek a petition for disclaimer of jurisdiction of public utility status for Passive Investors.

Any person desiring to intervene or to protest this filing must file in accordance with Rules 211 and 214 of the Commission's Rules of Practice and Procedure (18 CFR 385.211, 385.214). Protests will be considered by the Commission in determining the appropriate action to be taken, but will not serve to make protestants parties to the proceeding. Any person wishing to become a party must file a notice of intervention or motion to intervene, as appropriate. Such notices, motions, or protests must be filed on or before the comment date. On or before the comment date, it is not necessary to serve motions to intervene or protests on persons other than the Applicant.

The Commission encourages electronic submission of protests and interventions in lieu of paper using the ''eFiling'' link at *http://www.ferc.gov.* Persons unable to file electronically should submit an original and 14 copies of the protest or intervention to the Federal Energy Regulatory Commission, 888 First Street, NE., Washington, DC 20426.

This filing is accessible online at *http://www.ferc.gov*, using the ''eLibrary'' link and is available for review in the Commission's Public Reference Room in Washington, DC. There is an ''eSubscription'' link on the Web site that enables subscribers to receive e-mail notification when a

document is added to a subscribed docket(s). For assistance with any FERC Online service, please e-mail *FERCOnlineSupport@ferc.gov*, or call (866) 208–3676 (toll free). For TTY, call (202) 502–8659.

Comment Date: 5 p.m. Eastern Time on October 15, 2007.

Kimberly D. Bose,

Secretary.

[FR Doc. E7–19783 Filed 10–5–07; 8:45 am]

BILLING CODE 6717–01–P

DEPARTMENT OF ENERGY

Federal Energy Regulatory Commission

[Docket No. ER07–1202–000]

J.D. Wind 4, LLC; Notice of Issuance of Order

September 25, 2007.

J.D. Wind 4, LLC (J.D. Wind) filed an application requesting Commission authorization to engage in wholesale sales of electric energy and capacity at market-based rates. J.D. Wind also requested waivers of various Commission regulations. In particular, J.D. Wind requested that the Commission grant blanket approval under 18 CFR part 34 of all future issuances of securities and assumptions of liability by J.D. Wind.

On September 24, 2007, the Commission granted J.D.Wind's request for blanket approval under part 34 (September 24 Order). The September 24 Order also provided parties an opportunity to file comments or protest the Commission's blanket approval of issuances of securities or assumption of liabilities by J. D. Wind. Accordingly, any person desiring to be heard concerning the blanket approvals of issuances of securities or assumptions of liability by J.D. Wind, should file a protest with the Federal Energy Regulatory Commission, 888 First Street, NE., Washington, DC 20426, in accordance with Rules 211 and 214 of the Commission's Rules of Practice and Procedure. 18 CFR 385.211, 385.214 (2004).

Notice is hereby given that the deadline for filing protests is October 25, 2007.

Absent a request to be heard in opposition to such blanket approvals by the deadline above, J.D. Wind is authorized to issue securities and assume obligations or liabilities as a guarantor, indorser, surety, or otherwise in respect of any security of another person; provided that such issuance or assumption is for some lawful object within the corporate purposes of J.D. Wind, compatible with the public interest, and is reasonably necessary or appropriate for such purposes.

The Commission reserves the right to require a further showing that neither public nor private interests will be adversely affected by continued approvals of J.D. Wind's issuance of securities or assumptions of liability.

Copies of the full text of the September 24 Order are available from the Commission's Public Reference Room, 888 First Street, NE., Washington, DC 20426. The Order may also be viewed on the Commission's Web site at *http://www.ferc.gov*, using the eLibrary link. Enter the docket number excluding the last three digits in the docket number filed to access the document. Comments, protests, and interventions may be filed electronically via the Internet in lieu of paper. See, 18 CFR 385.2001(a) (1) (iii) and the instructions on the Commission's Web site under the ''e-Filing'' link. The Commission strongly encourages electronic filings.

Kimberly D. Bose,

Secretary.

[FR Doc. E7–19770 Filed 10–5–07; 8:45 am]

BILLING CODE 6717–01–P

DEPARTMENT OF ENERGY

Federal Energy Regulatory Commission

[Docket Nos. EL07–105–000; QF07–129–002]

Matanuska Electric Association, Inc., Tiqun Energy, Inc.; Notice of Filing

September 28, 2007.

Take notice that on August 31, 2007, as completed on September 21, 2007, Matanuska Electric Association, Inc. (Matanuska) filed a Petition for Declaratory Order and Motion for Revocation seeking the revocation of the qualifying facility (QF) status of a QF self-certified by Tiqun Energy, Inc. (Tiqun). The QF, which has not been built, is the Pioneer Energy Project (Pioneer Facility), which was self-certified by Tiqun in Docket No. QF07–129–000. Matanuska claims that the Pioneer Facility does not meet the criteria for QF status, and thus the Commission should issue an order revoking its QF status. Matanuska also asks for refund of the filing fee it paid on September 21, 2007, claiming that a filing fee is not required for action on its petition/motion to revoke the QF status of the Pioneer Facility.

Any person desiring to intervene or to protest this filing must file in accordance with Rules 211 and 214 of the Commission's Rules of Practice and Procedure (18 CFR 385.211, 385.214). Protests will be considered by the Commission in determining the appropriate action to be taken, but will not serve to make protestants parties to the proceeding. Any person wishing to become a party must file a notice of intervention or motion to intervene, as appropriate. Such notices, motions, or protests must be filed on or before the comment date. On or before the comment date, it is not necessary to serve motions to intervene or protests on persons other than the Applicant.

The Commission encourages electronic submission of protests and interventions in lieu of paper using the ''eFiling'' link at *http://www.ferc.gov*. Persons unable to file electronically should submit an original and 14 copies of the protest or intervention to the Federal Energy Regulatory Commission, 888 First Street, NE., Washington, DC 20426.

This filing is accessible online at *http://www.ferc.gov*, using the ''eLibrary'' link and is available for review in the Commission's Public Reference Room in Washington, DC. There is an ''eSubscription'' link on the Web site that enables subscribers to receive e-mail notification when a document is added to a subscribed docket(s). For assistance with any FERC Online service, please e-mail *FERCOnlineSupport@ferc.gov*, or call (866) 208–3676 (toll free). For TTY, call (202) 502–8659.

Comment Date: 5 p.m. Eastern Time on October 26, 2007.

Kimberly D. Bose,

Secretary.

[FR Doc. E7–19784 Filed 10–5–07; 8:45 am]

BILLING CODE 6717–01–P

DEPARTMENT OF ENERGY

Federal Energy Regulatory Commission

[Docket No. RP06–182–001]

Midwestern Gas Transmission Company; Notice of Third Party Balancing Activity Report

September 25, 2007.

Take notice that on March 15, 2007, Midwestern Gas Transmission Company (Midwestern) tendered for filing a Third Party Balancing Activity Report.

Midwestern states that this report complies with the Commission's order issued February 28, 2006, in Docket No.

RP06–182–000, wherein the Commission directed Midwestern to file an activity report after one year of service detailing its experience with the implementation of the new service under Rate Schedule TPB.

Any person desiring to protest this filing must file in accordance with Rule 211 of the Commission's Rules of Practice and Procedure (18 CFR 385.211). Protests to this filing will be considered by the Commission in determining the appropriate action to be taken, but will not serve to make protestants parties to the proceeding. Such protests must be filed on or before the date as indicated below. Anyone filing a protest must serve a copy of that document on all the parties to the proceeding.

The Commission encourages electronic submission of protests in lieu of paper using the ''eFiling'' link at *http://www.ferc.gov.* Persons unable to file electronically should submit an original and 14 copies of the protest to the Federal Energy Regulatory Commission, 888 First Street, NE., Washington, DC 20426.

This filing is accessible on-line at *http://www.ferc.gov,* using the ''eLibrary'' link and is available for review in the Commission's Public Reference Room in Washington, DC. There is an ''eSubscription'' link on the Web site that enables subscribers to receive e-mail notification when a document is added to a subscribed docket(s). For assistance with any FERC Online service, please e-mail *FERCOnlineSupport@ferc.gov,* or call (866) 208–3676 (toll free). For TTY, call (202) 502–8659.

Protest Date: 5 p.m. Eastern Time on October 3, 2007.

Kimberly D. Bose,

Secretary.

[FR Doc. E7–19773 Filed 10–5–07; 8:45 am]

BILLING CODE 6717–01–P

DEPARTMENT OF ENERGY

Federal Energy Regulatory Commission

[Docket Nos. ER07–1207–000 and ER07–1207–001]

Premier Energy Marketing LLC.; Notice of Issuance of Order

September 25, 2007.

Premier Energy Marketing LLC (Premier) filed an application for market-based rate authority, with an accompanying rate schedule. The proposed market-based rate schedule provides for the sale of energy and capacity at market-based rates. Premier also requested waivers of various Commission regulations. In particular, Premier requested that the Commission grant blanket approval under 18 CFR part 34 of all future issuances of securities and assumptions of liability by Premier.

On September 17, 2007, pursuant to delegated authority, the Director, Division of Tariffs and Market Development—West, granted the requests for blanket approval under Part 34 (Director's Order). The Director's Order also stated that the Commission would publish a separate notice in the **Federal Register** establishing a period of time for the filing of protests. Accordingly, any person desiring to be heard concerning the blanket approvals of issuances of securities or assumptions of liability by Premier, should file a protest with the Federal Energy Regulatory Commission, 888 First Street, NE., Washington, DC 20426, in accordance with Rules 211 and 214 of the Commission's Rules of Practice and Procedure. 18 CFR 385.211, 385.214 (2004).

Notice is hereby given that the deadline for filing protests is October 18, 2007.

Absent a request to be heard in opposition to such blanket approvals by the deadline above, Premier is authorized to issue securities and assume obligations or liabilities as a guarantor, indorser, surety, or otherwise in respect of any security of another person; provided that such issuance or assumption is for some lawful object within the corporate purposes of Premier, compatible with the public interest, and is reasonably necessary or appropriate for such purposes.

The Commission reserves the right to require a further showing that neither public nor private interests will be adversely affected by continued approvals of Premier's issuance of securities or assumptions of liability.

Copies of the full text of the Director's Order are available from the Commission's Public Reference Room, 888 First Street, NE., Washington, DC 20426. The Order may also be viewed on the Commission's Web site at *http://www.ferc.gov*, using the eLibrary link. Enter the docket number excluding the last three digits in the docket number filed to access the document. Comments, protests, and interventions may be filed electronically via the Internet in lieu of paper. See, 18 CFR 385.2001(a)(1)(iii) and the instructions on the Commission's Web site under the ''e-Filing'' link. The Commission strongly encourages electronic filings.

Kimberly D. Bose,

Secretary.

[FR Doc. E7–19771 Filed 10–5–07; 8:45 am]

BILLING CODE 6717–01–P

DEPARTMENT OF ENERGY

Federal Energy Regulatory Commission

[Docket Nos. ER07–1161–000 and ER07–1161–001]

Public Power & Utility, Inc.; Notice of Issuance of Order

September 25, 2007.

Public Power & Utility, Inc. (PP&U) filed an application for market-based rate authority, with an accompanying rate schedule. The proposed market-based rate schedule provides for the sale of energy and capacity at market-based rates. PP&U also requested waivers of various Commission regulations. In particular, PP&U requested that the Commission grant blanket approval under 18 CFR part 34 of all future issuances of securities and assumptions of liability by PP&U.

On September 17, 2007, pursuant to delegated authority, the Director, Division of Tariffs and Market Development-West, granted the requests for blanket approval under part 34 (Director's Order). The Director's Order also stated that the Commission would publish a separate notice in the **Federal Register** establishing a period of time for the filing of protests. Accordingly, any person desiring to be heard concerning the blanket approvals of issuances of securities or assumptions of liability by Mittal, should file a protest with the Federal Energy Regulatory Commission, 888 First Street, NE., Washington, DC 20426, in accordance with Rules 211 and 214 of the Commission's Rules of Practice and Procedure. 18 CFR 385.211, 385.214 (2004).

Notice is hereby given that the deadline for filing protests is October 18, 2007.

Absent a request to be heard in opposition to such blanket approvals by the deadline above, PP&U is authorized to issue securities and assume obligations or liabilities as a guarantor, indorser, surety, or otherwise in respect of any security of another person; provided that such issuance or assumption is for some lawful object within the corporate purposes of PP&U, compatible with the public interest, and is reasonably necessary or appropriate for such purposes.

The Commission reserves the right to require a further showing that neither public nor private interests will be adversely affected by continued approvals of PP&U's issuance of securities or assumptions of liability.

Copies of the full text of the Director's Order are available from the Commission's Public Reference Room, 888 First Street, NE., Washington, DC 20426. The Order may also be viewed on the Commission's Web site at *http://www.ferc.gov,* using the eLibrary link. Enter the docket number excluding the last three digits in the docket number filed to access the document. Comments, protests, and interventions may be filed electronically via the Internet in lieu of paper. See, 18 CFR 385.2001(a)(1)(iii) and the instructions on the Commission's Web site under the ''e-Filing'' link. The Commission strongly encourages electronic filings.

Kimberly D. Bose,

Secretary.

[FR Doc. E7–19769 Filed 10–5–07; 8:45 am]

BILLING CODE 6717–01–P

DEPARTMENT OF ENERGY

Federal Energy Regulatory Commission

[Docket No. CP07–449–000]

Southern Natural Gas Company; Notice of Request Under Blanket Authorization

September 26, 2007.

Take notice that on September 19, 2007, Southern Natural Gas Company (Southern), Colonial Brookwood Center, 569 Brookwood Village, Birmingham, Alabama 35209, filed in Docket No. CP07–449–000, a prior notice request pursuant to sections 157.205 and 157.208 of the Federal Energy Regulatory Commission's regulations under the Natural Gas Act for authorization to continue the use of a skid mounted compressor unit, located in Screven County, Georgia, that was installed in 2006 as emergency compression, all as more fully set forth in the application, which is on file with the Commission and open to public inspection. The filing may also be viewed on the Web at *http://www.ferc.gov* using the ''eLibrary'' link. Enter the docket number excluding the last three digits in the docket number field to access the document. For assistance, contact FERC at *FERCOnlineSupport@ferc.gov* or call toll-free, (886) 208–3676 or TYY, (202) 502–8659.

Specifically, Southern proposes to continue the use of the Woodcliff Compressor Unit, rated at 5,278 horsepower, that was installed as an emergency facility in order to restore the availability of Southern's gulf coast infrastructure caused in August and September 2005 by Hurricanes Katrina and Rita. Southern states that the total cost for refurbishing and installation was $2,177,371. Southern asserts that it would be more economical to continue the use of the unit at its refurbished state rather than place it back in storage and the unit continues to be a worthwhile asset to support incremental gas supplies on the system. Southern states that the unit will not be utilized to serve additional firm requirements.

Any questions regarding the application should be directed to Patricia S. Francis, Senior Counsel, Southern Natural Gas Company, Post Office Box 2563, Birmingham, Alabama 35202–2563, or call at (205) 325–7696.

Any person or the Commission's Staff may, within 60 days after the issuance of the instant notice by the Commission, file pursuant to Rule 214 of the Commission's Procedural Rules (18 CFR 385.214) a motion to intervene or notice of intervention and, pursuant to section 157.205 of the Commission's Regulations under the Natural Gas Act (NGA) (18 CFR 157.205) a protest to the request. If no protest is filed within the time allowed therefore, the proposed activity shall be deemed to be authorized effective the day after the time allowed for protest. If a protest is filed and not withdrawn within 30 days after the time allowed for filing a protest, the instant request shall be treated as an application for authorization pursuant to section 7 of the NGA.

The Commission strongly encourages electronic filings of comments, protests, and interventions via the Internet in lieu of paper. See 18 CFR 385.2001(a)(1)(iii) and the instructions on the Commission's Web site (*http://www.ferc.gov*) under the ''e-Filing'' link.

Kimberly D. Bose,

Secretary.

[FR Doc. E7–19781 Filed 10–5–07; 8:45 am]

BILLING CODE 6717–01–P

DEPARTMENT OF ENERGY

Federal Energy Regulatory Commission

[Docket No. NJ07–9–000]

Southwestern Power Administration; Notice of Filing

September 28, 2007.

Take notice that on September 27, 2007, Southwestern Power Administration (Southwestern) filed a non-jurisdictional modification to its Open Access Transmission Tariff, including Small Generator Interconnection Procedures, Small Generator Interconnection Agreement, Large Generator Interconnection Procedures and Large Generator Interconnection Agreement. Southwestern has requested that the revised non-jurisdictional Open Access Transmission Tariff become effective December 1, 2007.

Any person desiring to intervene or to protest this filing must file in accordance with Rules 211 and 214 of the Commission's Rules of Practice and Procedure (18 CFR 385.211, 385.214). Protests will be considered by the Commission in determining the appropriate action to be taken, but will not serve to make protestants parties to the proceeding. Any person wishing to become a party must file a notice of intervention or motion to intervene, as appropriate. Such notices, motions, or protests must be filed on or before the comment date. On or before the comment date, it is not necessary to serve motions to intervene or protests on persons other than the Applicant.

The Commission encourages electronic submission of protests and interventions in lieu of paper using the ''eFiling'' link at *http://www.ferc.gov*. Persons unable to file electronically should submit an original and 14 copies of the protest or intervention to the Federal Energy Regulatory Commission, 888 First Street, NE., Washington, DC 20426.

This filing is accessible on-line at *http://www.ferc.gov*, using the ''eLibrary'' link and is available for review in the Commission's Public Reference Room in Washington, DC. There is an ''eSubscription'' link on the Web site that enables subscribers to receive e-mail notification when a document is added to a subscribed docket(s). For assistance with any FERC Online service, please e-mail *FERCOnlineSupport@ferc.gov*, or call (866) 208–3676 (toll free). For TTY, call (202) 502–8659.

Comment Date: 5 p.m. Eastern Time on October 29, 2007.

Kimberly D. Bose,

Secretary.

[FR Doc. E7–19785 Filed 10–5–07; 8:45 am]

BILLING CODE 6717–01–P

DEPARTMENT OF ENERGY

Federal Energy Regulatory Commission

Notice of Effectiveness of Exempt Wholesale Generator or Foreign Utility Company Status

September 24, 2007.

In the Matter of: Docket Nos. EG07–49–000, EG07–52–000, EG07–53–000, EG07–54–000, EG07–55–000, EG07–56–000, FC07–50–000, FC07–51–000, Sweetwater Wind 4 LLC, Goat Mountain Wind, LP, Bethlehem Renewable Energy, LLC, Stanton Wind Energy, LLC, Scurry County Wind II, LLC, Tiverton Power, Inc., Rumford Power, Inc., TransCanada Energy, Ltd., CMS Enterprise Company

Take notice that during the month of July 2007, the status of the above-captioned entities as Exempt Wholesale Generators or Foreign Utility Companies became effective by operation of the Commission's regulations. 18 CFR 366.7(a).

Kimberly D. Bose,

Secretary.

[FR Doc. E7–19774 Filed 10–5–07; 8:45 am]

BILLING CODE 6717–01–P

DEPARTMENT OF ENERGY

Federal Energy Regulatory Commission

Combined Notice of Filings # 1

September 28, 2007.

Take notice that the Commission received the following electric corporate filings:

Docket Numbers: EC07–135–000.

Applicants: Plains End, LLC; Plains End II, LLC; Rathdrum Power, LLC; Quachita Power, LLC.

Description: Application for authorization for disposition of jurisdictional facilities and request for expedited action re Plains End, LLC *et al.*

Filed Date: 09/24/2007.

Accession Number: 20070926–0116.

Comment Date: 5 p.m. Eastern Time on Monday, October 15, 2007.

Take notice that the Commission received the following exempt wholesale generator filings:

Docket Numbers: EG07–88–000.

Applicants: Snyder Wind Farm, LLC.

Description: Notice of Self-Certification of Exempt Wholesale Generator Status for Snyder Wind Farm, LLC.

Filed Date: 09/27/2007.

Accession Number: 20070927–5021.

Comment Date: 5 p.m. Eastern Time on Thursday, October 18, 2007.

Docket Numbers: EG07–89–000.

Applicants: FPL Energy Point Beach, LLC.

Description: Notice of Self-Certification of Exempt Wholesale Generator Status of FPL Energy Point Beach, LLC.

Filed Date: 09/28/2007.

Accession Number: 20070928–5006.

Comment Date: 5 p.m. Eastern Time on Friday, October 19, 2007.

Take notice that the Commission received the following electric rate filings:

Docket Numbers: ER05–17–009.

Applicants: Trans-Elect NTD Path 15, LLC.

Description: Atlantic Path 15 submits for filing its refund report.

Filed Date: 09/27/2007.

Accession Number: 20070927–5009.

Comment Date: 5 p.m. Eastern Time on Thursday, October 18, 2007.

Docket Numbers: ER07–1093–001.

Applicants: Southwest Power Pool, Inc.

Description: Southwest Power Pool, Inc. submits a revised executed service agreement for Network Integration Transmission Service with Westar Energy, Inc.

Filed Date: 09/25/2007.

Accession Number: 20070927–0115.

Comment Date: 5 p.m. Eastern Time on Tuesday, October 16, 2007.

Docket Numbers: ER07–1126–001; ER07–1126–002.

Applicants: Niagara Mohawk Power Corporation.

Description: Niagara Mohawk submits information in response to FERC's letter dated 8/21/07 and on 9/25/07submits errata to its 9/20/07 filing.

Filed Date: 09/20/2007; 09/25/2007.

Accession Number: 20070924–0318; 20070926–0191.

Comment Date: 5 p.m. Eastern Time on Thursday, October 11, 2007.

Docket Numbers: ER07–1163–001.

Applicants: Puget Sound Energy, Inc.

Description: Puget Sound Energy, Inc. submits a compliance filing re Second Revised Sheet 166 to FERC Electric Tariff, Eighth Revised Volume 1, to be effective 7/13/07.

Filed Date: 09/26/2007.

Accession Number: 20070928–0083.

Comment Date: 5 p.m. Eastern Time on Wednesday, October 17, 2007.

Docket Numbers: ER07–1374–001.

Applicants: South Carolina Electric & Gas Company.

Description: South Carolina Electric & Gas Co submits an executed Industrial Tap Agreement with the City of Orangeburg, South Carolina.

Filed Date: 09/27/2007.

Accession Number: 20070928–0081.

Comment Date: 5 p.m. Eastern Time on Thursday, October 18, 2007.

Docket Numbers: ER07–1399–000.

Applicants: PJM Interconnection, L.L.C.

Description: PJM Interconnection, LLC submits two executed interconnection service agreements with Conectiv Delmarva Generation, Inc & Old Dominion Electric Coop.

Filed Date: 09/25/2007.

Accession Number: 20070927–0116.

Comment Date: 5 p.m. Eastern Time on Tuesday, October 16, 2007.

Docket Numbers: ER07–1400–000.

Applicants: The United Illuminating Company.

Description: The United Illuminating Co submits proposed modifications to Schedule 21-UI of the ISO New England Inc Transmission Tariff.

Filed Date: 09/25/2007.

Accession Number: 20070926–0159.

Comment Date: 5 p.m. Eastern Time on Tuesday, October 16, 2007.

Docket Numbers: ER07–1401–000.

Applicants: WSPP Inc.

Description: Western Systems Power Pool, Inc submits a request to amend the WSPP Agreement to include ArcLight Energy Marketing, LLC *et al.*

Filed Date: 09/26/2007.

Accession Number: 20070928–0084.

Comment Date: 5 p.m. Eastern Time on Wednesday, October 17, 2007.

Docket Numbers: ER07–1402–000; ES07–66–000.

Applicants: Allegheny Generating Company.

Description: Allegheny Generating Co submits First Revised Rate Schedule 1 as an amended version of the Power Sales Agreement.

Filed Date: 09/26/2007.

Accession Number: 20070928–0085.

Comment Date: 5 p.m. Eastern Time on Wednesday, October 17, 2007.

Docket Numbers: ER07–1403–000.

Applicants: Pacific Gas and Electric Company.

Description: Pacific Gas and Electric Co submits an executed Transmission Facilities Agreement with Alameda Power And Telecom.

Filed Date: 09/27/2007.

Accession Number: 20070928–0082.

Comment Date: 5 p.m. Eastern Time on Thursday, October 18, 2007.

Docket Numbers: ER07–1404–000.

Applicants: Southern California Edison Company.

Description: Southern California Edison submits a Letter Agreement with BrightSource Energy, Inc.

Filed Date: 09/27/2007.

Accession Number: 20070928–0080.

Comment Date: 5 p.m. Eastern Time on Thursday, October 18, 2007.

Docket Numbers: ER07–1405–000.

Applicants: New York Independent System Operator, Inc.

Description: New York Independent System Operator, Inc submits proposed revisions to its Market Administration and Control Area Services Tariff to remove outdated and unnecessary language from Rate Schedule 2.

Filed Date: 09/27/2007.

Accession Number: 20070928–0079.

Comment Date: 5 p.m. Eastern Time on Thursday, October 18, 2007.

Any person desiring to intervene or to protest in any of the above proceedings must file in accordance with Rules 211 and 214 of the Commission's Rules of Practice and Procedure (18 CFR 385.211 and 385.214) on or before 5 p.m. Eastern time on the specified comment date. It is not necessary to separately intervene again in a subdocket related to a compliance filing if you have previously intervened in the same docket. Protests will be considered by the Commission in determining the appropriate action to be taken, but will not serve to make protestants parties to the proceeding. Anyone filing a motion to intervene or protest must serve a copy of that document on the Applicant. In reference to filings initiating a new proceeding, interventions or protests submitted on or before the comment deadline need not be served on persons other than the Applicant.

The Commission encourages electronic submission of protests and interventions in lieu of paper, using the FERC Online links at *http://www.ferc.gov.* To facilitate electronic service, persons with Internet access who will eFile a document and/or be listed as a contact for an intervenor must create and validate an eRegistration account using the eRegistration link. Select the eFiling link to log on and submit the intervention or protests.

Persons unable to file electronically should submit an original and 14 copies of the intervention or protest to the Federal Energy Regulatory Commission, 888 First St., NE., Washington, DC 20426.

The filings in the above proceedings are accessible in the Commission's eLibrary system by clicking on the appropriate link in the above list. They are also available for review in the Commission's Public Reference Room in Washington, DC. There is an eSubscription link on the Web site that enables subscribers to receive e-mail notification when a document is added to a subscribed dockets(s). For assistance with any FERC Online service, please e-mail *FERCOnlineSupport@ferc.gov* or call (866) 208–3676 (toll free). For TTY, call (202) 502–8659.

Nathaniel J. Davis, Sr.,

Acting Deputy Secretary.

[FR Doc. E7–19727 Filed 10–5–07; 8:45 am]

BILLING CODE 6717–01–P

DEPARTMENT OF ENERGY

Federal Energy Regulatory Commission

Combined Notice of Filings #1

October 1, 2007.

Take notice that the Commission has received the following Natural Gas Pipeline Rate and Refund Report filings:

Docket Numbers: RP05–164–011.

Applicants: Equitrans, LP.

Description: Equitrans LP submits Twenty-Eight Revised Sheet 6 to its FERC Gas Tariff, First Revised Volume 1, effective 11/1/07.

Filed Date: 09/28/2007.

Accession Number: 20071001–0027.

Comment Date: 5 p.m. Eastern Time on Wednesday, October 10, 2007.

Docket Numbers: RP07–713–000.

Applicants: Dominion Transmission, Inc.

Description: Dominion Transmission Inc submits Thirty-Fourth Revised Sheet 31 et al. to its FERC Gas Tariff, Third Revised Volume 1, to become effective 11/1/07.

Filed Date: 09/28/2007.

Accession Number: 20071001–0026.

Comment Date: 5 p.m. Eastern Time on Wednesday, October 10, 2007.

Docket Numbers: RP07–714–000.

Applicants: Destin Pipeline Company, L.L.C.

Description: Destin Pipeline Company LLC submits Third Revised Sheet 258 to its FERC Gas Tariff, Volume 1, to become effective 11/1/07.

Filed Date: 09/28/2007.

Accession Number: 20071001–0025.

Comment Date: 5 p.m. Eastern Time on Wednesday, October 10, 2007.

Docket Numbers: RP07–715–000.

Applicants: Liberty Gas Storage, LLC.

Description: Liberty Gas Storage LLC submits First Revised Sheet 153 et al. to its FERC Gas Tariff, Original Volume 1.

Filed Date: 09/28/2007.

Accession Number: 20071001–0024.

Comment Date: 5 p.m. Eastern Time on Wednesday, October 10, 2007.

Docket Numbers: RP07–716–000.

Applicants: Iroquois Gas Transmission System, L.P.

Description: Iroquois Gas Transmission System LP submits a report relating to its Deferred Asset Surcharge.

Filed Date: 09/28/2007.

Accession Number: 20071001–0030.

Comment Date: 5 p.m. Eastern Time on Wednesday, October 10, 2007.

Docket Numbers: RP07–717–000.

Applicants: Dominion Transmission, Inc.

Description: Dominion Transmission Inc submits Thirty-Third Revised Sheet 31 et al. to its FERC Gas Tariff, Third Revised Volume 1, to become effective 11/1/07.

Filed Date: 09/28/2007.

Accession Number: 20071001–0029.

Comment Date: 5 p.m. Eastern Time on Wednesday, October 10, 2007.

Docket Numbers: RP97–81–042.

Applicants: Kinder Morgan Interstate Gas Trans. LLC.

Description: Kinder Morgan Interstate Gas Transmission LLC submits Seventeenth Revised Sheet 4G.01 et al. to its FERC Gas Tariff, Fourth Revised Volume 1–A, to become effective 10/1/07.

Filed Date: 09/28/2007.

Accession Number: 20071001–0028.

Comment Date: 5 p.m. Eastern Time on Wednesday, October 10, 2007.

Any person desiring to intervene or to protest in any of the above proceedings must file in accordance with Rules 211 and 214 of the Commission's Rules of Practice and Procedure (18 CFR 385.211 and 385.214) on or before 5 p.m. Eastern time on the specified comment date. It is not necessary to separately intervene again in a subdocket related to a compliance filing if you have previously intervened in the same docket. Protests will be considered by the Commission in determining the appropriate action to be taken, but will not serve to make protestants parties to the proceeding. Anyone filing a motion to intervene or protest must serve a copy of that document on the Applicant. In reference to filings initiating a new proceeding, interventions or protests submitted on or before the comment deadline need not be served on persons other than the Applicant.

The Commission encourages electronic submission of protests and interventions in lieu of paper, using the FERC Online links at *http://www.ferc.gov.* To facilitate electronic service, persons with Internet access

who will eFile a document and/or be listed as a contact for an intervenor must create and validate an eRegistration account using the eRegistration link. Select the eFiling link to log on and submit the intervention or protests.

Persons unable to file electronically should submit an original and 14 copies of the intervention or protest to the Federal Energy Regulatory Commission, 888 First St., NE., Washington, DC 20426.

The filings in the above proceedings are accessible in the Commission's eLibrary system by clicking on the appropriate link in the above list. They are also available for review in the Commission's Public Reference Room in Washington, DC. There is an eSubscription link on the Web site that enables subscribers to receive e-mail notification when a document is added to a subscribed dockets(s). For assistance with any FERC Online service, please e-mail *FERCOnlineSupport@ferc.gov.* or call (866) 208–3676 (toll free). For TTY, call (202) 502–8659.

Nathaniel J. Davis, Sr.,

Acting Deputy Secretary.

[FR Doc. E7–19728 Filed 10–5–07; 8:45 am]

BILLING CODE 6717–01–P

DEPARTMENT OF ENERGY

Federal Energy Regulatory Commission

Combined Notice of Filings #1

September 27, 2007.

Take notice that the Commission has received the following Natural Gas Pipeline Rate and Refund Report filings:

Docket Numbers: RP07–698–000.
Applicants: Steuben Gas Storage Company.
Description: Steuben Gas Storage Company submits Tenth Revised Sheet 1(A) to FERC Gas Tariff, Original Volume 2, to be effective 10/15/07.
Filed Date: 09/14/2007.
Accession Number: 20070925–0278.
Comment Date: 5 p.m. Eastern Time on Wednesday, October 3, 2007.

Docket Numbers: RP07–706–000.
Applicants: Colorado Interstate Gas Company.
Description: Colorado Interstate Gas Company submits First Revised Sheet 22A et al. to FERC Gas Tariff, First Revised Volume 1, to become effective 11/1/07.
Filed Date: 09/24/2007.
Accession Number: 20070925–0279.
Comment Date: 5 p.m. Eastern Time on Tuesday, October 9, 2007.

Docket Numbers: RP07–707–000.
Applicants: El Paso Natural Gas Company.
Description: El Paso Natural Gas Company submits First Revised Sheet 105C et al. to FERC Gas Tariff, Second Revised Volume 1A, effective 11/1/07.
Filed Date: 09/25/2007.
Accession Number: 20070925–0342.
Comment Date: 5 p.m. Eastern Time on Tuesday, October 9, 2007.

Docket Numbers: RP07–708–000.
Applicants: El Paso Natural Gas Company.
Description: El Paso Natural Gas Co submits Thirty-Fifth Revised Sheet 20 et al. to its FERC Gas Tariff, Second Revised Volume 1–A, to be effective 11/1/07, Volume 1 of 2, Part 1 of 3.
Filed Date: 09/25/2007.
Accession Number: 20070925–0280.
Comment Date: 5 p.m. Eastern Time on Tuesday, October 9, 2007.

Docket Numbers: RP07–709–000.
Applicants: Dominion Cove Point LNG, LP.
Description: Dominion Cove Point LNG, LP submits its annual report of revenue crediting distributions that were made pursuant to Section 31(d) of its FERC Gas Tariff, Original Volume 1 etc.
Filed Date: 09/25/2007.
Accession Number: 20070926–0158.
Comment Date: 5 p.m. Eastern Time on Tuesday, October 9, 2007.

Docket Numbers: RP07–710–000.
Applicants: Viking Gas Transmission Company.
Description: Viking Gas Transmission Company submits Twenty-First Revised Sheet 5 to FERC Gas Tariff, First Revised Volume 1, effective 11/1/07.
Filed Date: 09/26/2007.
Accession Number: 20070926–0193.
Comment Date: 5 p.m. Eastern Time on Tuesday, October 9, 2007.

Docket Numbers: RP07–711–000.
Applicants: Transcontinental Gas Pipe Line Corp.
Description: Transcontinental Gas Pipe Line Corp submits Twenty-Seventh Revised Sheet 29 to its FERC Gas Tariff, third Revised Volume 1, effective 11/1/07.
Filed Date: 09/26/2007.
Accession Number: 20070926–0192.
Comment Date: 5 p.m. Eastern Time on Tuesday, October 9, 2007.

Docket Numbers: RP07–712–000.
Applicants: Great Lakes Gas Transmission L P.
Description: Great Lakes Gas Transmission Limited Partnership submits Twenty-First Revised Sheet 1 et al. to FERC Gas Tariff, Second Revised Volume 1, effective 11/1/07 etc.
Filed Date: 09/26/2007.
Accession Number: 20070927–0142.
Comment Date: 5 p.m. Eastern Time on Tuesday, October 9, 2007.

Any person desiring to intervene or to protest in any of the above proceedings must file in accordance with Rules 211 and 214 of the Commission's Rules of Practice and Procedure (18 CFR 385.211 and 385.214) on or before 5 p.m. Eastern time on the specified comment date. It is not necessary to separately intervene again in a subdocket related to a compliance filing if you have previously intervened in the same docket. Protests will be considered by the Commission in determining the appropriate action to be taken, but will not serve to make protestants parties to the proceeding. Anyone filing a motion to intervene or protest must serve a copy of that document on the Applicant. In reference to filings initiating a new proceeding, interventions or protests submitted on or before the comment deadline need not be served on persons other than the Applicant.

The Commission encourages electronic submission of protests and interventions in lieu of paper, using the FERC Online links at *http://www.ferc.gov.* To facilitate electronic service, persons with Internet access who will eFile a document and/or be listed as a contact for an intervenor must create and validate an eRegistration account using the eRegistration link. Select the eFiling link to log on and submit the intervention or protests.

Persons unable to file electronically should submit an original and 14 copies of the intervention or protest to the Federal Energy Regulatory Commission, 888 First St., NE., Washington, DC 20426.

The filings in the above proceedings are accessible in the Commission's eLibrary system by clicking on the appropriate link in the above list. They are also available for review in the Commission's Public Reference Room in Washington, DC. There is an eSubscription link on the Web site that enables subscribers to receive e-mail notification when a document is added to a subscribed dockets(s). For assistance with any FERC Online service, please e-mail *FERCOnlineSupport@ferc.gov.* or call (866) 208–3676 (toll free). For TTY, call (202) 502–8659.

Nathaniel J. Davis, Sr.,

Acting Deputy Secretary.

[FR Doc. E7–19759 Filed 10–5–07; 8:45 am]

BILLING CODE 6717–01–P

DEPARTMENT OF ENERGY

Federal Energy Regulatory Commission

Combined Notice of Filings #1

September 25, 2007.

Take notice that the Commission has received the following Natural Gas Pipeline Rate and Refund Report filings:

Docket Numbers: RP96–312–169.
Applicants: Tennessee Gas Pipeline Company.
Description: Tennessee Gas Pipeline Company submits various negotiated rate agreements with Boston Gas Company.
Filed Date: 09/20/2007.
Accession Number: 20070921–0050.
Comment Date: 5 p.m. Eastern Time on Tuesday, October 2, 2007.

Docket Numbers: RP96–383–081.
Applicants: CNG Transmission Corporation, Dominion Transmission, Inc.
Description: Dominion Transmission Inc submits Fifth Revised Sheet 1401 to FERC Gas Tariff, Third Revised Volume 1, effective 11/1/07.
Filed Date: 09/21/2007.
Accession Number: 20070921–0100.
Comment Date: 5 p.m. Eastern Time on Wednesday, October 3, 2007.

Docket Numbers: RP07–567–001.
Applicants: Crossroads Pipeline Company.
Description: Crossroads Pipeline Company submits Third Revised Sheet 73 et al. to FERC Gas Tariff, First Revised Volume 1, effective 9/10/07.
Filed Date: 09/20/2007.
Accession Number: 20070920–0138.
Comment Date: 5 p.m. Eastern Time on Tuesday, October 2, 2007.

Docket Numbers: RP07–692–001.
Applicants: Vector Pipeline L.P.
Description: Vector Pipeline, LP submits a revised tariff sheet to correct a pagination error in its 9/13/07 submittal of First Revised Sheet 55 et al. to FERC Gas Tariff, Original Volume 1.
Filed Date: 09/21/2007.
Accession Number: 20070924–0373.
Comment Date: 5 p.m. Eastern Time on Wednesday, October 3, 2007.

Docket Numbers: RP07–702–000.
Applicants: National Fuel Gas Supply Corporation.
Description: National Fuel Gas Supply Corp submits Second Revised Sheet 376 to FERC Gas Tariff, Fourth Revised Volume 1, effective 10/21/07.
Filed Date: 09/21/2007.
Accession Number: 20070921–0099.
Comment Date: 5 p.m. Eastern Time on Wednesday, October 3, 2007.

Docket Numbers: RP07–703–000.
Applicants: Guardian Pipeline, L.L.C.
Description: Guardian Pipeline, LLC submits Fourteenth Revised Sheet 5 to FERC Gas Tariff, Original Volume 1, effective 11/1/07.
Filed Date: 09/21/2007.
Accession Number: 20070921–0058.
Comment Date: 5 p.m. Eastern Time on Wednesday, October 3, 2007.

Docket Numbers: RP07–704–000.
Applicants: Transcontinental Gas Pipe Line Corp.
Description: Transcontinental Gas Pipe Line Corp submits their Rate Schedules PAL and ICTS Revenue Sharing Refund Report.
Filed Date: 09/21/2007.
Accession Number: 20070924–0372.
Comment Date: 5 p.m. Eastern Time on Wednesday, October 3, 2007.

Docket Numbers: RP07–705–000.
Applicants: Kern River Gas Transmission Company.
Description: Kern River Gas Transmission Co requests that the Commission waive an obligation set forth in Article II, Section 1.1 of the 1998 Settlement Agreement.
Filed Date: 09/21/2007.
Accession Number: 20070924–0371.
Comment Date: 5 p.m. Eastern Time on Wednesday, October 3, 2007.

Any person desiring to intervene or to protest in any of the above proceedings must file in accordance with Rules 211 and 214 of the Commission's Rules of Practice and Procedure (18 CFR 385.211 and 385.214) on or before 5 p.m. Eastern time on the specified comment date. It is not necessary to separately intervene again in a subdocket related to a compliance filing if you have previously intervened in the same docket. Protests will be considered by the Commission in determining the appropriate action to be taken, but will not serve to make protestants parties to the proceeding. Anyone filing a motion to intervene or protest must serve a copy of that document on the Applicant. In reference to filings initiating a new proceeding, interventions or protests submitted on or before the comment deadline need not be served on persons other than the Applicant.

The Commission encourages electronic submission of protests and interventions in lieu of paper, using the FERC Online links at *http://www.ferc.gov.* To facilitate electronic service, persons with Internet access who will eFile a document and/or be listed as a contact for an intervenor must create and validate an eRegistration account using the eRegistration link. Select the eFiling link to log on and submit the intervention or protests.

Persons unable to file electronically should submit an original and 14 copies of the intervention or protest to the Federal Energy Regulatory Commission, 888 First St., NE., Washington, DC 20426.

The filings in the above proceedings are accessible in the Commission's eLibrary system by clicking on the appropriate link in the above list. They are also available for review in the Commission's Public Reference Room in Washington, DC. There is an eSubscription link on the Web site that enables subscribers to receive e-mail notification when a document is added to a subscribed dockets(s). For assistance with any FERC Online service, please e-mail *FERCOnlineSupport@ferc.gov.* or call (866) 208–3676 (toll free). For TTY, call (202) 502–8659.

Nathaniel J. Davis, Sr.,
Acting Deputy Secretary.

[FR Doc. E7–19760 Filed 10–5–07; 8:45 am]

BILLING CODE 6717–01–P

DEPARTMENT OF ENERGY

Federal Energy Regulatory Commission

[Project No. 2197–073; Project No. 2206–030]

Alcoa Generating, Inc., NC; Progress Energy Carolinas, North Carolina; Notice of Availability of the Draft Environmental Impact Statement for the Yadkin Project and the Yadkin-Pee Dee River Project

September 28, 2007.

In accordance with the National Environmental Policy Act of 1969 and the Federal Energy Regulatory Commission's (Commission) regulations, 18 CFR part 380 (Order No. 486, 52 FR 47897), the Office of Energy Projects has reviewed the applications for relicense for the Yadkin Project (FERC No. 2197) and the Yadkin-Pee Dee River Project (FERC No. 2206), located on the Yadkin and Pee Dee rivers in central North Carolina near Charlotte, North Carolina and has prepared a Draft Environmental Impact Statement (draft EIS) for the projects.

The existing 210-megawatt (MW) Yadkin Project and the existing 108.6–MW Yadkin-Pee Dee River Project do not occupy any federal lands.

In the draft EIS, staff evaluates the applicants' proposals and alternatives for relicensing the projects. Staff's analysis includes evaluation of settlement agreements filed with the Commission for both projects which

replaced the Proposed Actions originally filed with the license applications. The draft EIS documents the views of governmental agencies, non-governmental organizations, affected Indian tribes, the public, the license applicants, and Commission staff.

Comments should be filed with: Kimberly D. Bose, Secretary, Federal Energy Regulatory Commission, 888 First Street, NE., Washington, DC 20426. All comments must be filed within 60 days of the notice in the **Federal Register**, and should reference either Project No. 2197–073 (Yadkin Project) or Project No. 2206–030 (Yadkin-Pee Dee River Project). Comments may be filed electronically via the Internet in lieu of paper. The Commission strongly encourages electronic filings. See 18 CFR 385.2001(a)(1)(iii) and instructions on the Commission's Web site at *http://www.ferc.gov* under the eLibrary link.

Anyone may intervene in this proceeding based on this draft EIS (18 CFR 380.10). You may also file your request to intervene electronically. You do not need intervenor status to have the Commission consider your comments.

Copies of the draft EIS are available for review in the Commission's Public Reference Branch, Room 2A, located at 888 First Street, NE., Washington, DC 20426. The draft EIS also may be viewed on the Internet at *http://www.ferc.gov* under the eLibrary link. Enter the docket number (either P–2197 or P–2206) to access the document. For assistance, contact FERC Online Support at *FERCOnlineSupport@ferc.gov* or toll-free at 1–866–208–3676, or for TTY, (202) 502–8659.

CD versions of the draft EIS have been mailed to everone on the mailing list for the projects. Copies of the CD, as well as a limited number of paper copies, are available from the Public Reference Room identified above.

You may also register online at *http://www.ferc.gov/docs-filing/esubscription.asp* to be notified via e-mail of new filings and issuances related to these or other pending projects. For assistance, contact FERC Online Support.

For further information, contact Stephen Bowler at (202) 502–6861 or *stephen.bowler@ferc.gov* or Lee Emery at (202) 5028379 or *lee.emery@ferc.gov.*

Kimberly D. Bose,

Secretary.

[FR Doc. E7–19782 Filed 10–5–07; 8:45 am]

BILLING CODE 6717–01–P

DEPARTMENT OF ENERGY

Federal Energy Regulatory Commission

[Docket No. CP07–367–000]

Columbia Gas Transmission Corporation; Notice of Availability of the Environmental Assessment for the Proposed Columbia Eastern Market Expansion Project

October 1, 2007.

The staff of the Federal Energy Regulatory Commission (FERC or Commission) has prepared an environmental assessment (EA) on the natural gas pipeline facilities proposed by Columbia Gas Transmission Corporation (Columbia) in the above-referenced docket.

The EA was prepared to satisfy the requirements of the National Environmental Policy Act. The FERC staff concludes that approval of the proposed project, with appropriate mitigating measures, would not constitute a major federal action significantly affecting the quality of the human environment.

The EA assesses the potential environmental effects of the construction and operation of Columbia's proposed Eastern Market Expansion Project (EME Project). The EME Project would consist of: (a) Expanding the existing Crawford Storage Field in Fairfield and Hocking Counties, Ohio; (b) expanding the existing Coco A and C Storage Fields in Kanawha County, West Virginia; (c) installing a total of 35,091 horsepower and upgrades at four existing compressor stations in West Virginia; and (d) constructing three sections of 26- to 36-inch-diameter pipeline looping totaling 15.26 miles in Clay and Randolph Counties, West Virginia, and Warren, Clarke, and Fauquier Counties, Virginia. The proposed expansion would provide an additional 97,050 dekatherms per day of storage deliverability and associated firm pipeline transportation capacity. Columbia also proposes abandonment by replacement of several appurtenant facilities associated with this project.

The EA has been placed in the public files of the FERC. A limited number of copies of the EA are available for distribution and public inspection at: Federal Energy Regulatory Commission, Public Reference Room, 888 First Street, NE., Room 2A, Washington, DC 20426, (202) 502–8371.

Copies of the EA have been mailed to federal, state, and local agencies, public interest groups, interested individuals, newspapers in the project area, and parties to this proceeding.

Any person wishing to comment on the EA may do so. To ensure consideration prior to a Commission decision on the proposal, it is important that we receive your comments before the date specified below.

Please note that the Commission strongly encourages electronic filing of any comments or interventions or protests to this proceeding. See 18 CFR 385.2001(a)(1)(iii) and the instructions on the Commission's Web site at *http://www.ferc.gov* under the ''e-Filing'' link and the link to the User's Guide. Before you can file comments you will need to create a free account which can be created by clicking on ''Sign-up.''

If you are filing written comments, please carefully follow these instructions to ensure that your comments are received in time and properly recorded:

- Send an original and two copies of your comments to: Kimberly D. Bose, Secretary, Federal Energy Regulatory Commission, 888 First St., NE., Room 1A, Washington, DC 20426;
- Reference Docket No. CP07–367–000;
- Label one copy of the comments for the attention of the Gas Branch 1, PJ–11.1; and
- Mail your comments so that they will be received in Washington, DC on or before October 31, 2007.

Comments will be considered by the Commission but will not serve to make the commentor a party to the proceeding. Any person seeking to become a party to the proceeding must file a motion to intervene pursuant to Rule 214 of the Commission's Rules of Practice and Procedures (18 CFR 385.214).[1] Only intervenors have the right to seek rehearing of the Commission's decision.

Affected landowners and parties with environmental concerns may be granted intervenor status upon showing good cause by stating that they have a clear and direct interest in this proceeding which would not be adequately represented by any other party. You do not need intervenor status to have your comments considered.

Additional information about the project is available from the Commission's Office of External Affairs at 1–866–208–FERC or on the FERC Internet Web site (*www.ferc.gov*) using the eLibrary link. Click on the eLibrary link, then on ''General Search'' and

[1] Interventions may also be filed electronically via the Internet in lieu of paper. See the previous discussion on filing comments electronically.

enter the docket number excluding the last three digits in the Docket Number field (i.e., CP07–367). Be sure you have selected an appropriate date range. For assistance, please contact FERC Online Support at *FercOnlineSupport@ferc.gov* or toll free at 1–866–208–3676, or for TTY, contact (202) 502–8659. The eLibrary link also provides access to the texts of formal documents issued by the Commission, such as orders, notices, and rulemakings.

In addition, the Commission now offers a free service called eSubscription which allows you to keep track of all formal issuances and submittals in specific dockets. This can reduce the amount of time you spend researching proceedings by automatically providing you with notification of these filings, document summaries and direct links to the documents. Go to *www.ferc.gov/esubscribenow.htm*.

Kimberly D. Bose,

Secretary.

[FR Doc. E7–19790 Filed 10–5–07; 8:45 am]

BILLING CODE 6717–01–P

DEPARTMENT OF ENERGY

Federal Energy Regulatory Commission

[Project No. 11879–001—Idaho]

Symbiotics, LLC; Notice of Availability of Environmental Assessment

September 28, 2007.

In accordance with the National Environmental Policy Act of 1969, as amended, and Federal Energy Regulatory Commission (Commission or FERC) regulations (18 CFR part 380), Commission staff have reviewed the license application for the Chester Diversion Hydroelectric Project (FERC No. 11879) and have prepared a draft environmental assessment (EA) on the proposed action. The project is located on the Henry's Fork of the Snake River in Fremont County, Idaho, downstream of some of the most well-known fly fishing areas in the country.

Symbiotics, LLC (applicant) filed an application for license with the Commission for an original license for the 3.3-megawatt (MW) Chester Diversion Hydroelectric Project, using the existing Cross Cut Diversion dam (Chester Diversion dam).[1] In this draft EA, Commission staff analyzes the probable environmental effects of construction and operation of the project and have concluded that approval of the license, with appropriate staff-recommended environmental measures, would not constitute a major federal action significantly affecting the quality of the human environment.

Copies of the draft EA are available for review in Public Reference Room 2–A of the Commission's offices at 888 First Street, NE., Washington, DC. The draft EA also may be viewed on the Commission's Internet Web site (*http://www.ferc.gov*) using the ''eLibrary'' link. Additional information about the project is available from the Commission's Office of External Affairs, at (202) 502–6088, or on the Commission's Web site using the eLibrary link. For assistance with eLibrary, contact *FERCOnlineSupport@ferc.gov* or call toll-free at (866) 208–3676, or for TTY contact (202) 502–8659.

Any comments on the draft EA should be filed within 30 days of the date of this notice and should be addressed to Kimberly D. Bose, Secretary, Federal Energy Regulatory Commission, 888 First Street, NE., Washington, DC 20426. Please reference ''Chester Diversion Hydroelectric Project, FERC Project No. 11879–001'' on all comments. Comments may be filed electronically via the Internet in lieu of paper. See 18 CFR 385.2001(a)(1)(iii) and the instructions on the Commission's Web site under the ''e-Filing'' link.

Kimberly D. Bose,

Secretary.

[FR Doc. E7–19786 Filed 10–5–07; 8:45 am]

BILLING CODE 6717–01–P

[1] The Chester Diversion dam was initially constructed as the ''Cross Cut Diversion dam'' because it served as the diversion dam for the Cross Cut irrigation canal. It now also serves as the diversion dam for the Last Chance irrigation canal, and because of its location near Chester, Idaho, is now referred to as the Chester Diversion dam. While both names are appropriate, we use the ''Chester Diversion'' moniker for consistency and clarity in this EA.

DEPARTMENT OF ENERGY

Federal Energy Regulatory Commission

[Docket No. PF07–14–000]

CenterPoint Energy Gas Transmission; Notice of Intent To Prepare an Environmental Assessment for the Proposed Tontitown Project and Request for Comments on Environmental Issues

September 26, 2007.

The staff of the Federal Energy Regulatory Commission (FERC or Commission) will prepare an environmental assessment (EA) that will discuss the environmental impacts of constructing and operating the CenterPoint Energy Gas Transmission Company's (CenterPoint) proposed Tontitown Project (Project).

This notice announces the opening of the scoping process[1] public comment period we will use to gather input from the public and interested agencies about the proposed Project. Your input will help the Commission staff determine which issues need to be evaluated in the EA. Please note that the scoping period will close on October 27, 2007.

This notice is being sent to affected landowners; Federal, State, and local government representatives and agencies; environmental and public interest groups; Native American tribes; other interested parties in this proceeding; and local libraries and newspapers. We encourage government representatives to notify their constituents of this proposed Project and encourage them to comment on their areas of concern.

If you are a landowner receiving this notice, you may be contacted by a pipeline company representative about the acquisition of an easement to construct, operate, and maintain the proposed facilities. The pipeline company would seek to negotiate a mutually acceptable agreement. However, if the project is approved by the Commission, that approval conveys with it the right of eminent domain. Therefore, if easement negotiations fail to produce an agreement, the pipeline company could initiate condemnation proceedings in accordance with state law.

A fact sheet prepared by the Commission entitled ''An Interstate Natural Gas Facility on My Land? What Do I Need to Know?'' addresses a number of typically asked questions, including the use of eminent domain and how to participate in the Commission's proceedings. It is available for viewing on the FERC Internet Website (*http://www.ferc.gov*).

Summary of the Proposed Project

CenterPoint proposes to modify its existing interstate natural gas transmission system. Specifically, CenterPoint proposes to construct and operate approximately 16.0 miles of 24-inch-diameter natural gas pipeline (OM–1–A pipeline) and ancillary facilities adjacent to an existing interstate natural gas pipeline in Logan and Franklin Counties, Arkansas.

[1] The National Environmental Policy Act requires the Commission to undertake a process to identify and address concerns the public may have about a proposed project. This process is commonly referred to as the ''scoping process''.

CenterPoint also proposes to construct and operate a 10,310-horsepower gas turbine-driven compressor station (Poteau Compressor Station) along existing natural gas pipelines in Le Flore County, Oklahoma.

Map depicting the proposed facilities are provided in Appendix 1.[2]

Land Requirements for Construction

Construction and operation of the proposed pipeline would require the use of temporary and permanent rights-of-way. CenterPoint has indicated that it would utilize existing right-of-way easements adjacent to the proposed pipeline to the extent practicable. Construction and operation of the proposed compressor station would require the temporary and permanent use of up to 12.0 acres of land.

The Environmental Review and Assessment Processes

The Commission's staff has initiated a pre-filing environmental review of CenterPoint's proposed project. The purpose of the pre-filing environmental review is to identify and resolve potential environmental issues prior to the submission of an application for a Certificate of Public Convenience and Necessity (Certificate) by CenterPoint. During a pre-filing environmental review, the public is encouraged to comment on environmental issues related to the proposed Project. Upon completion of staff's pre-filing environmental review, CenterPoint has indicated that it would file an application for a Certificate. Based upon the pre-filing environmental review and CenterPoint's application, staff will prepare an EA as required by the National Environmental Policy Act (NEPA) which requires the Commission to consider the environmental impacts of a proposed project whenever it considers the issuance of a Certificate.

The Commission's staff will prepare an EA that will discuss the potential environmental impacts resulting from the proposed Project under the following general headings:

- Geology and Soils.
- Water Resources and Wetlands.
- Fisheries, Vegetation and Wildlife.
- Threatened and Endangered Species.
- Air Quality and Noise.
- Land Use.
- Cultural Resources.
- Pipeline Safety and Reliability.

The Commission's staff will also evaluate possible alternatives to the proposed Project including system and route alternatives and make recommendations on how to lessen or avoid potential impacts to affected environmental resources.

As noted previously, the NEPA also requires the Commission to undertake a process to identify and address concerns the public may have about a proposed project. This process is commonly referred to as the ''scoping process''. The main goal of the ''scoping process'' is to identify public concerns so that they can be considered in the Commission's environmental review. Therefore, to satisfy NEPA requirements, the Commission requests comments on environmental issues that should be considered in its environmental review and assessment. To ensure your comments are considered, please carefully follow the instructions in the public participation section of this notice.

Upon completion of the staff's environmental review and depending on the issues identified and/or comments received during the ''scoping'' process, the EA may be published and mailed to Federal, State and local government agencies; elected officials; environmental and public interest groups; affected landowners; other interested parties; local libraries and newspapers; and the Commission's official service list for this proceeding. A 30-day comment period would be allotted for review of the EA if it is published. Staff would consider all comments submitted concerning the EA before making their recommendations to the Commission.

Federal, state, or local agencies wishing to participate in staff's environmental review and the subsequent development of an EA may request ''cooperating agency'' status. Cooperating agencies are encouraged to participate in the scoping process and provide staff with written comments concerning the proposed Project. Agencies wanting to participate as a cooperating agency should send a letter as indicated in the public participation section of this notice describing the extent to which they would like to be involved.

Currently Identified Environmental Issues

The Commission's staff has already identified numerous environmental issues it thinks deserves consideration based on its review of preliminary information submitted by CenterPoint. These issues include potential impacts to:

- Land use.
- Residences.
- Federally-listed threatened and endangered species.
- Cultural resources; and
- Air and noise quality.

Public Participation

You can make a difference by providing us with your specific comments or concerns about the proposed Project. By becoming a commentor, your comments and concerns will be considered in the environmental review, addressed in the EA and considered by the Commission. Generally, comments are submitted regarding potential environmental effects, reasonable alternatives, and measures to avoid or lessen environmental impact. The more specific your comments, the more useful they will be. To ensure that your comments are properly recorded, please mail them to our office on or before October 27, 2007. When filing comments please:

- Send an original and two copies of your letter to: Kimberly D. Bose, Secretary, Federal Energy Regulatory Commission, 888 First St., NE., Room 1A, Washington, DC 20426;
- Label one copy of your comments to the attention of Gas Branch 2, DG2E; and reference Pre-Filing Docket No. PF07–14–000 on the original and both copies.

Please note that the Commission encourages the electronic filing of comments. To file electronic comments online please see the instructions[3] on the Commission's Web site at *http://www.ferc.gov*. Please note before you can file electronic comments with the Commission you will need to create a free online account.

Once CenterPoint files an application for a Certificate with the Commission, a stakeholder may choose to become an official party to the proceeding known as an ''intervenor.'' Intervenors are allotted a more formal role in the process and are able to file briefs, appear at hearings, and be heard by the courts if they choose to appeal the Commission's final ruling. Instructions for becoming an intervenor are available on the Commission's Web site. Please note that requests to intervene will not be accepted until an application for a Certificate is filed with the Commission.

Environmental Mailing List

An effort has been made to send this notice to all individuals, organizations, and government entities that might be

[2] The appendices referenced to in this notice will not be printed in the **Federal Register**. Copies of these appendices are available on the Commission's Web site (excluding maps) at *http://www.ferc.gov* or from the Commission's Public Reference Room—(202) 502–8371.

[3] 18 Code of Federal Regulations 385.2001(a)(1)(iii).

interested in and/or potentially affected by the proposed Project. This includes all landowners who are potential right-of-way grantors, landowners whose property may be used temporarily for project purposes, and landowners with homes within distances defined in the Commission's regulations of certain aboveground facilities.

If you would like to remain on the environmental mailing list for this proposed Project, please return the Mailing List Retention Form found in Appendix 2. If you do not comment on this proposed Project or return this form, you will be removed from the Commission's environmental mailing list.

Availability of Additional Information

Additional information about the proposed Project is available from the Commission's Office of External Affairs at 1–866–208 FERC (3372) or through the Commission's ''eLibrary'' which can be found online at *http://www.ferc.gov*. For assistance with the Commission's ''eLibrary'', contact the helpline at 1–866–208–3676, TTY (202) 502–8659, or at *FERCOnlineSupport@ferc.gov*.

Additionally, the FERC now offers a free service called eSubscription that allows stakeholders to keep track of all formal issuances and submittals in specific dockets. This can reduce the amount of time stakeholders spend researching proceedings by automatically providing them with notification of filings, document summaries, and direct links to the documents. To register for this service, go to *http://www.ferc.gov/esubscribenow.htm*.

If applicable, public meetings or site visits associated with this proposed Project will be posted on the Commission's calendar which can be found online at *http://www.ferc.gov/EventCalendar/EventsList.aspx*.

Kimberly D. Bose,

Secretary.

[FR Doc. E7–19775 Filed 10–5–07; 8:45 am]

BILLING CODE 6717–01–P

DEPARTMENT OF ENERGY

Federal Energy Regulatory Commission

[Project No. 7528–009]

Public Service Company of New Hampshire; Notice of Application Accepted for Filing, Soliciting Motions To Intervene and Protests, Ready for Environmental Analysis, and Soliciting Comments, Recommendations, Preliminary Terms and Conditions, and Preliminary Fishway Prescriptions

September 25, 2007.

Take notice that the following hydroelectric application has been filed with the Commission and is available for public inspection.

a. *Type of Application*: Subsequent License.

b. *Project No.*: 7528–009.

c. *Date Filed*: July 30, 2007.

d. *Applicant*: Public Service Company of New Hampshire.

e. *Name of Project*: Canaan Hydroelectric Project.

f. *Location*: The project is located on the northern Connecticut River in Coos County, New Hampshire and Essex County, Vermont. The project does not occupy United States land.

g. *Filed Pursuant to*: Federal Power Act 16 U.S.C. 791 (a)–825(r).

h. *Applicant Contact*: James K. Kerns, Project Manager, Public Service Company of New Hampshire, 780 North Commercial Street, Manchester, NH 03101 (603) 634–2936.

i. *FERC Contact*: Kristen Murphy (202) 502–6236 or *kristen.murphy@ferc.gov*.

j. The deadline for filing motions to intervene and protests, comments, recommendations, preliminary terms and conditions, and preliminary fishway prescriptions is November 27, 2007, in accordance with the schedule set by the Commission's August 10, 2007, Notice of Application Tendered; reply comments are due 105 days from the issuance date of this notice.

All documents (original and eight copies) should be filed with: Kimberly D. Bose, Secretary, Federal Energy Regulatory Commission, 888 First Street, NE., Washington, DC 20426.

The Commission's Rules of Practice require all intervenors filing documents with the Commission to serve a copy of that document on each person on the official service list for the project. Further, if an intervenor files comments or documents with the Commission relating to the merits of an issue that may affect the responsibilities of a particular resource agency, they must also serve a copy of the document on that resource agency.

Motions to intervene, protests, comments, recommendations, preliminary terms and conditions, and preliminary fishway prescriptions may be filed electronically via the Internet in lieu of paper. The Commission strongly encourages electronic filings. See 18 CFR 385.2001(a)(1)(iii) and the instructions on the Commission's web site (*http://www.ferc.gov*) under the ''e-Filing'' link.

k. This application has been accepted for filing and is ready for environmental analysis.

l. The existing project consist of: (1) A 275-foot-long, 14.5-foot-high concrete gravity dam with a spillway equipped with 3.5-foot-high wooden flashboards, utilized year-round; (2) a 20-acre reservoir with a gross storage capacity of approximately 200 acre-feet; (3) an intake structure with a 12.5-foot-wide, 12-foot-high timber gate leading to; (4) a 1,360-foot-long, 9-foot-diameter wood stave penstock; (5) two 21.3-foot-high, 15.3-foot-diameter steel surge tanks; (6) a powerhouse with one generating unit with an installed capacity of 1,100 kW; and (7) appurtenant facilities. The estimated average annual generation of the project is 7,300 megawatt-hours.

The project is currently operated in a run-of-river mode. Under the existing license, a total minimum flow of 136 cfs or inflow, whichever is less, is released downstream of the dam, with 50 cfs released through the 1,600-foot-long bypassed reach and the remaining 86 cfs released through the project turbine. As proposed, the project would continue to be operated in a run-of-river mode. Further, a total minimum flow of 165 cfs or inflow, whichever is less, would be released downstream of the project dam through the bypassed reach.

m. A copy of the application is available for review at the Commission in the Public Reference Room or may be viewed on the Commission's Web site at *http://www.ferc.gov* using the ''eLibrary'' link. Enter the docket number excluding the last three digits in the docket number field to access the document. For assistance, contact FERC Online Support at *FERCOnlineSupport@ferc.gov* or toll-free at 1–866–208–3676, or for TTY, 202–502–8659. A copy is also available for inspection and reproduction at the address in item h above.

Register online at *http://www.ferc.gov/esubscribenow.htm* to be notified via email of new filings and issuances related to this or other pending projects. For assistance, contact FERC Online Support.

n. Anyone may submit comments, a protest, or a motion to intervene in accordance with the requirements of Rules of Practice and Procedure, 18 CFR 385.210, .211, .214. In determining the appropriate action to take, the Commission will consider all protests or other comments filed, but only those who file a motion to intervene in accordance with the Commission's Rules may become a party to the proceeding. Any comments, protests, or motions to intervene must be received on or before the specified comment date for the particular application.

All filings must (1) Bear in all capital letters the title ''PROTEST'', ''MOTION TO INTERVENE'', ''COMMENTS,'' ''REPLY COMMENTS,'' ''RECOMMENDATIONS,'' ''PRELIMINARY TERMS AND CONDITIONS,'' or ''PRELIMINARY FISHWAY PRESCRIPTIONS;'' (2) set forth in the heading the name of the applicant and the project number of the application to which the filing responds; (3) furnish the name, address, and telephone number of the person protesting or intervening; and (4) otherwise comply with the requirements of 18 CFR 385.2001 through 385.2005. All comments, recommendations, terms and conditions or prescriptions must set forth their evidentiary basis and otherwise comply with the requirements of 18 CFR 4.34(b). Agencies may obtain copies of the application directly from the applicant. A copy of any protest or motion to intervene must be served upon each representative of the applicant specified in the particular application. A copy of all other filings in reference to this application must be accompanied by proof of service on all persons listed in the service list prepared by the Commission in this proceeding, in accordance with 18 CFR 4.34(b) and 385.2010.

o. Procedural Schedule:

The application will be processed according to the following Hydro Licensing Schedule, as described in the Commission's August 10, 2007 Notice of Application Tendered. Revisions to the schedule may be made as appropriate.

Milestone	Target date
Filing of recommendations, preliminary terms and conditions, and preliminary fishway prescriptions	November 27, 2007.
Commission issues Non-Draft EA or EIS	March 26, 2008.
Comments on EA or EIS	April 25, 2008.
Modified terms and conditions	June 24, 2008.

p. Final amendments to the application must be filed with the Commission no later than 30 days from the issuance date of this notice.

q. A license applicant must file no later than 60 days following the date of issuance of the notice of acceptance and ready for environmental analysis provided for in § 5.22: (1) A copy of the water quality certification; (2) a copy of the request for certification, including proof of the date on which the certifying agency received the request; or (3) evidence of waiver of water quality certification.

Kimberly D. Bose,

Secretary.

[FR Doc. E7–19772 Filed 10–5–07; 8:45 am]

BILLING CODE 6717–01–P

DEPARTMENT OF ENERGY

Federal Energy Regulatory Commission

[Project No. 12646–001]

City of Broken Bow, OK; Notice of Application Ready for Environmental Analysis and Soliciting Comments, Recommendations, Terms and Conditions, and Prescriptions

September 26, 2007.

Take notice that the following hydroelectric license application has been filed with the Commission and is available for public inspection.

a. *Type of Application:* Original Major License.

b. *Project No.:* 12646–001.

c. *Date Filed:* July 6, 2006.

d. *Applicant:* City of Broken Bow, Oklahoma.

e. *Name of Project:* Pine Creek Lake Dam Hydropower Project.

f. *Location:* On the Little River, in McCurtain County, Oklahoma. The project would be located at the United States Army Corps of Engineers' (Corps) Pine Creek Lake Dam and would occupy several acres of land administered by the Corps.

g. *Filed Pursuant to:* Federal Power Act, 16 U.S.C. 791 (a)–825(r).

h. *Applicant Contact:* Olen Hill, City Manager, City of Broken Bow, Oklahoma, 210 North Broadway, Broken Bow, Oklahoma 74728; (405) 584–2282.

i. *FERC Contact:* Allyson Conner at (202) 502–6082 or *allyson.conner@ferc.gov*.

j. *Deadline for filing comments, recommendations, terms and conditions, and prescriptions:* 60 days from the issuance of this notice (Monday, November 26, 2007); reply comments are due 105 (Wednesday, January 9, 2008) days from the issuance date of this notice.

All documents (original and eight copies) should be filed with: Kimberly D. Bose, Secretary, Federal Energy Regulatory Commission, 888 First Street, NE., Washington, DC 20426.

The Commission's Rules of Practice and Procedure require all intervenors filing documents with the Commission to serve a copy of that document on each person whose name appears on the official service list for the project. Further, if an intervenor files comments or documents with the Commission relating to the merits of an issue that may affect the responsibilities of a particular resource agency, they must also serve a copy of the document on that resource agency.

Comments, recommendations, terms and conditions, and prescriptions may be filed electronically via the Internet in lieu of paper. The Commission strongly encourages electronic filings. See 18 CFR 385.2001(a)(1)(iii) and the instructions on the Commission's Web site (*http://www.ferc.gov*) under the ''eFiling'' link.

k. This application has been accepted, and is now ready for environmental analysis.

l. *Description of Project:* The proposed project, using the existing Corps' Pine Creek Dam and Reservoir, would consist of: (1) A diversion structure connecting to the existing outlet conduit; (2) a penstock connecting the diversion structure to the powerhouse; (3) a 112-foot-wide by 73-foot-long powerhouse containing two turbine-generator units, having a totaled installed capacity of 6.4 megawatts; (4) a tailrace returning flows to the Little River; (5) a one-mile-long, 14.4-kilovolt transmission line or a 6.5-mile-long, 13.8 kilovolt transmission line connecting to an existing distribution line; and (6) appurtenant facilities. The project would have an average annual generation of 16,200 megawatt-hours.

m. A copy of the application is available for review at the Commission in the Public Reference Room or may be viewed on the Commission's Web site at

http://www.ferc.gov using the ''eLibrary'' link. Enter the docket number excluding the last three digits in the docket number field to access the document. For assistance, contact FERC Online Support at *FERCOnlineSupport@ferc.gov* or toll-free at 1–866–208–3676, or for TTY, (202) 502–8659. A copy is also available for inspection and reproduction at the address in item h above.

All filings must: (1) Bear in all capital letters the title ''COMMENTS,'' ''REPLY COMMENTS,'' ''RECOMMENDATIONS,'' ''TERMS AND CONDITIONS,'' or ''PRESCRIPTIONS;'' (2) set forth in the heading the name of the applicant and the project number of the application to which the filing responds; (3) furnish the name, address, and telephone number of the person submitting the filing; and (4) otherwise comply with the requirements of 18 CFR 385.2001 through 385.2005. All comments, recommendations, terms and conditions, or prescriptions must set forth their evidentiary basis and otherwise comply with the requirements of 18 CFR 4.34(b) and 385.2010. Agencies may obtain copies of the application directly from the applicant.

You may also register online at *http://www.ferc.gov/docs-filing/esubscription.asp* to be notified via e-mail of new filings and issuances related to this or other pending projects. For assistance, contact FERC Online Support.

n. *Procedural Schedule:* The Commission staff proposes to issue a single Environmental Assessment (EA) rather than issuing a draft and final EA. Staff intends to allow at least 30 days for entities to comment on the EA. The Commission will take into consideration all comments received on the EA before taking final action on the license application. The application will be processed according to the following schedule, but revisions to the schedule may be made as appropriate:

Issue Notice of Availability of the EA: May 2008.

o. *The license applicant must file no later than 60 days following the date of issuance of this notice:* (1) A copy of the water quality certification; (2) a copy of the request for certification, including proof of the date on which the certifying agency received the request; or (3) evidence of waiver of water quality certification.

Kimberly D. Bose,

Secretary.

[FR Doc. E7–19776 Filed 10–5–07; 8:45 am]

BILLING CODE 6717–01–P

DEPARTMENT OF ENERGY

Federal Energy Regulatory Commission

[Project No. 12841–000]

Ute Water Conservancy District; Notice of Application Accepted for Filing and Soliciting Motions To Intervene, Protests, and Comments

September 26, 2007.

Take notice that the following hydroelectric application has been filed with the Commission and is available for public inspection:

a. *Type of Application:* Preliminary Permit.

b. *Project No.:* 12841–000.

c. *Date filed:* July 20, 2007.

d. *Applicant:* Ute Water Conservancy District.

e. *Name of Project:* Plateau Creek Project.

f. *Location:* The project would be located on Plateau Creek, Jerry Creek Reservoir #1, and Jerry Creek Reservoir #2, near the town of Palisade, in Mesa County, Colorado.

g. *Filed Pursuant to:* Federal Power Act, 16 U.S.C. 791(a)–825(r).

h. *Applicant Contact:* Mr. Larry Clever, Ute Water Conservancy District, P.O. Box 460, 25Rd, Grand Junction, CO 81502, phone (970) 242–7491.

i. *FERC Contact:* Sonali Dohale, (202) 502–6444.

j. *Deadline for filing comments, protests, and motions to intervene:* 60 days from the issuance date of this notice.

The Commission's Rules of Practice and Procedure require all intervenors filing documents with the Commission to serve a copy of that document on each person in the official service list for the project. Further, if an intervenor files comments or documents with the Commission relating to the merits of an issue that may affect the responsibilities of a particular resource agency, they must also serve a copy of the document on that resource agency.

k. *Description of Project:* The project would consist of the following. The Jerry Creek Dams and Reservoirs are owned by the Ute Water Conservancy District. Jerry Creek Reservoir #1 is located in Sections 9 and 16, Township T10S, Range 96W, Sixth Principal Meridian. Jerry Creek Reservoir #2 is located in Sections 9, 10 and 16, Township T10S, Range 96W, Sixth Principal Meridian. From the valve vault at Jerry Creek Reservoirs, water is transmitted through the Plateau Creek Pipeline by gravity to the Rapid Creek Water Treatment Plant (both facilities owned by the District) for a distance of about 15 miles in an alignment generally following Plateau Creek and Interstate Highway 70. The pipeline, completed in 2001, consists of 48-inch and 54-inch welded steel pipe. The total difference in elevation between the inlet at Jerry Creek Reservoirs and the terminus of the pipeline in a flow control vault at the water treatment plant (WTP) is about 290 feet.

The proposed generating unit would be located at the terminus of the Plateau Creek Pipeline in the existing flow control vault at the Rapid Creek WTP site with certain modifications to the vault and to existing equipment, piping and fittings in the vault. The total power production would be about 2.7 million kilowatt hours (kWh) in 2009.

l. *Locations of Applications:* A copy of the application is available for inspection and reproduction at the Commission in the Public Reference Room, located at 888 First Street, NE., Room 2A, Washington, DC 20426, or by calling (202) 502–8371. This filing may also be viewed on the Commission's Web site at *http://www.ferc.gov* using the ''eLibrary'' link. Enter the docket number excluding the last three digits in the docket number field to access the document. For assistance, call toll-free 1–866–208–3676 or e-mail *FERCOnlineSupport@ferc.gov*. For TTY, call (202) 502–8659. A copy is also available for inspection and reproduction at the address in item h above.

m. Individuals desiring to be included on the Commission's mailing list should so indicate by writing to the Secretary of the Commission.

n. *Competing Preliminary Permit:* Anyone desiring to file a competing application for preliminary permit for a proposed project must submit the competing application itself, or a notice of intent to file such an application, to the Commission on or before the specified comment date for the particular application (see 18 CFR 4.36). Submission of a timely notice of intent allows an interested person to file the competing preliminary permit application no later than 30 days after the specified comment date for the particular application. A competing preliminary permit application must conform with 18 CFR 4.30 and 4.36.

o. *Competing Development Application:* Any qualified development applicant desiring to file a competing development application must submit to the Commission, on or before a specified comment date for the particular application, either a competing development application or a notice of intent to file such an application. Submission of a timely

notice of intent to file a development application allows an interested person to file the competing application no later than 120 days after the specified comment date for the particular application. A competing license application must conform with 18 CFR 4.30 and 4.36.

p. *Notice of Intent:* A notice of intent must specify the exact name, business address, and telephone number of the prospective applicant, and must include an unequivocal statement of intent to submit, if such an application may be filed, either a preliminary permit application or a development application (specify which type of application). A notice of intent must be served on the applicant(s) named in this public notice.

q. *Proposed Scope of Studies under Permit:* A preliminary permit, if issued, does not authorize construction. The term of the proposed preliminary permit would be 36 months. The work proposed under the preliminary permit would include economic analysis, preparation of preliminary engineering plans, and a study of environmental impacts. Based on the results of these studies, the Applicant would decide whether to proceed with the preparation of a development application to construct and operate the project.

r. *Comments, Protests, or Motions to Intervene:* Anyone may submit comments, a protest, or a motion to intervene in accordance with the requirements of Rules of Practice and Procedure, 18 CFR 385.210, .211, .214. In determining the appropriate action to take, the Commission will consider all protests or other comments filed, but only those who file a motion to intervene in accordance with the Commission's Rules may become a party to the proceeding. Any comments, protests, or motions to intervene must be received on or before the specified comment date for the particular application.

Comments, protests and interventions may be filed electronically via the Internet in lieu of paper; See 18 CFR 385.2001(a)(1)(iii) and the instructions on the Commission's Web site under ''e-filing'' link. The Commission strongly encourages electronic filing.

s. *Filing and Service of Responsive Documents:* Any filings must bear in all capital letters the title ''COMMENTS'', ''RECOMMENDATIONS FOR TERMS AND CONDITIONS'', ''PROTEST'', ''COMPETING APPLICATION'' or ''MOTION TO INTERVENE'', as applicable, and the Project Number of the particular application to which the filing refers. Any of the above-named documents must be filed by providing the original and the number of copies provided by the Commission's regulations to: The Secretary, Federal Energy Regulatory Commission, 888 First Street, NE., Washington, DC 20426. A copy of any motion to intervene must also be served upon each representative of the Applicant specified in the particular application.

t. *Agency Comments:* Federal, State, and local agencies are invited to file comments on the described application. A copy of the application may be obtained by agencies directly from the Applicant. If an agency does not file comments within the time specified for filing comments, it will be presumed to have no comments. One copy of an agency's comments must also be sent to the Applicant's representatives.

Kimberly D. Bose,

Secretary.

[FR Doc. E7–19777 Filed 10–5–07; 8:45 am]

BILLING CODE 6717–01–P

DEPARTMENT OF ENERGY

Federal Energy Regulatory Commission

[Project No. 12847–000]

FFP Project 2, LLC; Notice of Application Accepted for Filing and Soliciting Comments, Motions To Intervene, and Protests

September 26, 2007.

Take notice that the following hydroelectric applications have been filed with the Commission and are available for public inspection:

a. *Type of Application:* Preliminary Permit.

b. *Project No.:* P–12847–000.

c. *Date Filed:* July 25, 2007.

d. *Applicant:* FFP Project 2, LLC.

e. *Name of the Project:* Harris Bayou Project.

f. *Location:* The project would be located on the Mississippi River in Plaquemines Parish, Louisiana. The project uses no dam or impoundment.

g. *Filed Pursuant to:* Federal Power Act, 16 U.S.C. 91a–825r.

h. *Applicants Contact:* Mr. Dan Irvin, FFP Project 2, LLC, 69 Bridge Street, Manchester, MA 01944, phone (978) 232–3536.

i. *FERC Contact:* Patricia W. Gillis, (202) 502–8735.

j. *Deadline for filing comments, protests, and motions to intervene:* 60 days from the issuance date of this notice.

All documents (original and eight copies) should be filed with: Secretary, Federal Energy Regulatory Commission, 888 First Street, NE., Washington, DC 20426. Comments, protests, and interventions may be filed electronically via the Internet in lieu of paper; see 18 CFR 385.2001(a)(1)(iii) and the instructions on the Commission's Web site under the ''e-Filing'' link. The Commission strongly encourages electronic filings. Please include the project number (P–12847–000) on any comments or motions filed.

The Commission's Rules of Practice and Procedure require all intervenors filing documents with the Commission to serve a copy of that document on each person in the official service list for the project. Further, if an intervenor files comments or documents with the Commission relating to the merits of an issue that may affect the responsibilities of a particular resource agency, they must also serve a copy of the document on that resource agency.

k. *Description of Project:* The proposed project would consist of: (1) 2,950 proposed 20 kilowatt Free Flow generating units having a total installed capacity of 59 megawatts, (2) a proposed transmission line, and (3) appurtenant facilities. The project would have an average annual generation of 258.42 gigawatt-hours and be sold to a local utility.

l. *Location of Application:* A copy of the application is available for inspection and reproduction at the Commission in the Public Reference Room, located at 888 First Street, NE., Room 2A, Washington, DC 20426, or by calling (202) 502–8371. This filing may also be viewed on the Commission's Web site at *http://www.ferc.gov* using the ''eLibrary'' link. Enter the docket number excluding the last three digits in the docket number field to access the document. For assistance, call toll-free 1–866–208–3676 or e-mail *FERCOnlineSupport@ferc.gov*. For TTY, call (202) 502–8659. A copy is also available for inspection and reproduction at the address in item h above.

m. Individuals desiring to be included on the Commission's mailing list should so indicate by writing to the Secretary of the Commission.

n. *Competing Preliminary Permit*—Anyone desiring to file a competing application for preliminary permit for a proposed project must submit the competing application itself, or a notice of intent to file such an application, to the Commission on or before the specified comment date for the particular application (see 18 CFR 4.36). Submission of a timely notice of intent allows an interested person to file the competing preliminary permit application no later than 30 days after

the specified comment date for the particular application. A competing preliminary permit application must conform with 18 CFR 4.30 and 4.36.

o. *Competing Development Application*—Any qualified development applicant desiring to file a competing development application must submit to the Commission, on or before a specified comment date for the particular application, either a competing development application or a notice of intent to file such an application. Submission of a timely notice of intent to file a development application allows an interested person to file the competing application no later than 120 days after the specified comment date for the particular application. A competing license application must conform with 18 CFR 4.30 and 4.36.

p. *Notice of Intent*—A notice of intent must specify the exact name, business address, and telephone number of the prospective applicant, and must include an unequivocal statement of intent to submit, if such an application may be filed, either a preliminary permit application or a development application (specify which type of application). A notice of intent must be served on the applicant(s) named in this public notice.

q. *Proposed Scope of Studies Under Permit*—A preliminary permit, if issued, does not authorize construction. The term of the proposed preliminary permit would be 36 months. The work proposed under the preliminary permit would include economic analysis, preparation of preliminary engineering plans, and a study of environmental impacts. Based on the results of these studies, the Applicant would decide whether to proceed with the preparation of a development application to construct and operate the project.

r. *Comments, Protests, or Motions to Intervene*—Anyone may submit comments, a protest, or a motion to intervene in accordance with the requirements of Rules of Practice and Procedure, 18 CFR 385.210, .211, .214. In determining the appropriate action to take, the Commission will consider all protests or other comments filed, but only those who file a motion to intervene in accordance with the Commission's Rules may become a party to the proceeding. Any comments, protests, or motions to intervene must be received on or before the specified comment date for the particular application.

Comments, protests and interventions may be filed electronically via the Internet in lieu of paper. See 18 CFR 385.2001(a)(1)(iii) and the instructions on the Commission's Web site at *http://www.ferc.gov* under the ''e-Filing'' link.

s. *Filing and Service of Responsive Documents*—Any filings must bear in all capital letters the title ''COMMENTS'', ''NOTICE OF INTENT TO FILE COMPETING APPLICATION'', ''COMPETING APPLICATION'', ''PROTEST'', and ''MOTION TO INTERVENE'', as applicable, and the Project Number of the particular application to which the filing refers. Any of the above-named documents must be filed by providing the original and the number of copies provided by the Commission's regulations to: The Secretary, Federal Energy Regulatory Commission, 888 First Street, NE., Washington, DC 20426. An additional copy must be sent to Director, Division of Hydropower Administration and Compliance, Federal Energy Regulatory Commission, at the above-mentioned address. A copy of any notice of intent, competing application or motion to intervene must also be served upon each representative of the Applicant specified in the particular application.

t. *Agency Comments*—Federal, state, and local agencies are invited to file comments on the described application. A copy of the application may be obtained by agencies directly from the Applicant. If an agency does not file comments within the time specified for filing comments, it will be presumed to have no comments. One copy of an agency's comments must also be sent to the Applicant's representatives.

Kimberly D. Bose,

Secretary.

[FR Doc. E7–19778 Filed 10–5–07; 8:45 am]

BILLING CODE 6717–01–P

DEPARTMENT OF ENERGY

Federal Energy Regulatory Commission

[FFP Project 17, LLC; Project No. 12865–000]

Notice of Application Accepted for Filing and Soliciting Comments, Motions To Intervene, and Protests

September 26, 2007.

Take notice that the following hydroelectric applications have been filed with the Commission and are available for public inspection:

a. *Type of Application:* Preliminary Permit.

b. *Project No.:* P–12865–000.

c. *Date Filed:* July 25, 2007.

d. *Applicant:* FFP Project 17, LLC.

e. *Name of the Project:* Remy Bend Project.

f. *Location:* The project would be located on the Mississippi River in St. James Parish, Louisiana. The project uses no dam or impoundment.

g. *Filed Pursuant to:* Federal Power Act, 16 U.S.C. 791a–825r.

h. *Applicants Contact:* Mr. Dan Irvin, FFP Project 17, LLC, 69 Bridge Street, Manchester, MA 01944, phone (978) 232–3536.

i. *FERC Contact:* Patricia W. Gillis, (202) 502–8735.

j. *Deadline for filing comments, protests, and motions to intervene:* 60 days from the issuance date of this notice.

All documents (original and eight copies) should be filed with: Secretary, Federal Energy Regulatory Commission, 888 First Street, NE., Washington, DC 20426. Comments, protests, and interventions may be filed electronically via the Internet in lieu of paper; see 18 CFR 385.2001(a)(1)(iii) and the instructions on the Commission's Web site under the ''e-Filing'' link. The Commission strongly encourages electronic filings. Please include the project number (P–12865–000) on any comments or motions filed.

The Commission's Rules of Practice and Procedure require all intervenors filing documents with the Commission to serve a copy of that document on each person in the official service list for the project. Further, if an intervenor files comments or documents with the Commission relating to the merits of an issue that may affect the responsibilities of a particular resource agency, they must also serve a copy of the document on that resource agency.

k. *Description of Project:* The proposed project would consist of: (1) 1,400 proposed 20-kilowatt Free Flow generating units having a total installed capacity of 28-megawatts, (2) a proposed transmission line, and (3) appurtenant facilities. The project would have an average annual generation of 122.64-gigawatt-hours and be sold to a local utility.

l. *Location of Application:* A copy of the application is available for inspection and reproduction at the Commission in the Public Reference Room, located at 888 First Street, NE., Room 2A, Washington, DC 20426, or by calling (202) 502–8371. This filing may also be viewed on the Commission's Web site at *http://www.ferc.gov* using the ''eLibrary'' link. Enter the docket number excluding the last three digits in the docket number field to access the document. For assistance, call toll-free 1–866–208–3676 or e-mail *FERCOnlineSupport@ferc.gov*. For TTY, call (202) 502–8659. A copy is also

available for inspection and reproduction at the address in item h above.

m. Individuals desiring to be included on the Commission's mailing list should so indicate by writing to the Secretary of the Commission.

n. *Competing Preliminary Permit*—Anyone desiring to file a competing application for preliminary permit for a proposed project must submit the competing application itself, or a notice of intent to file such an application, to the Commission on or before the specified comment date for the particular application (see 18 CFR 4.36). Submission of a timely notice of intent allows an interested person to file the competing preliminary permit application no later than 30 days after the specified comment date for the particular application. A competing preliminary permit application must conform with 18 CFR 4.30 and 4.36.

o. *Competing Development Application*—Any qualified development applicant desiring to file a competing development application must submit to the Commission, on or before a specified comment date for the particular application, either a competing development application or a notice of intent to file such an application. Submission of a timely notice of intent to file a development application allows an interested person to file the competing application no later than 120 days after the specified comment date for the particular application. A competing license application must conform with 18 CFR 4.30 and 4.36.

p. *Notice of Intent*—A notice of intent must specify the exact name, business address, and telephone number of the prospective applicant, and must include an unequivocal statement of intent to submit, if such an application may be filed, either a preliminary permit application or a development application (specify which type of application). A notice of intent must be served on the applicant(s) named in this public notice.

q. *Proposed Scope of Studies Under Permit*—A preliminary permit, if issued, does not authorize construction. The term of the proposed preliminary permit would be 36 months. The work proposed under the preliminary permit would include economic analysis, preparation of preliminary engineering plans, and a study of environmental impacts. Based on the results of these studies, the Applicant would decide whether to proceed with the preparation of a development application to construct and operate the project.

r. *Comments, Protests, or Motions to Intervene*—Anyone may submit comments, a protest, or a motion to intervene in accordance with the requirements of Rules of Practice and Procedure, 18 CFR 385.210, .211, .214. In determining the appropriate action to take, the Commission will consider all protests or other comments filed, but only those who file a motion to intervene in accordance with the Commission's Rules may become a party to the proceeding. Any comments, protests, or motions to intervene must be received on or before the specified comment date for the particular application.

Comments, protests and interventions may be filed electronically via the Internet in lieu of paper. See 18 CFR 385.2001(a)(1)(iii) and the instructions on the Commission's Web site at *http://www.ferc.gov* under the ''e-Filing'' link.

s. *Filing and Service of Responsive Documents*—Any filings must bear in all capital letters the title ''COMMENTS'', ''NOTICE OF INTENT TO FILE COMPETING APPLICATION'', ''COMPETING APPLICATION'', ''PROTEST'', and ''MOTION TO INTERVENE'', as applicable, and the Project Number of the particular application to which the filing refers. Any of the above-named documents must be filed by providing the original and the number of copies provided by the Commission's regulations to: The Secretary, Federal Energy Regulatory Commission, 888 First Street, NE., Washington, DC 20426. An additional copy must be sent to Director, Division of Hydropower Administration and Compliance, Federal Energy Regulatory Commission, at the above-mentioned address. A copy of any notice of intent, competing application or motion to intervene must also be served upon each representative of the Applicant specified in the particular application.

t. *Agency Comments*—Federal, state, and local agencies are invited to file comments on the described application. A copy of the application may be obtained by agencies directly from the Applicant. If an agency does not file comments within the time specified for filing comments, it will be presumed to have no comments. One copy of an agency's comments must also be sent to the Applicant's representatives.

Kimberly D. Bose,

Secretary.

[FR Doc. E7–19779 Filed 10–5–07; 8:45 am]

BILLING CODE 6717–01–P

DEPARTMENT OF ENERGY

Federal Energy Regulatory Commission

[Project No. 4656–020]

Boise-Kuna Irrigation District, Nampa & Meridian Irrigation District, New York Irrigation District, Wilder Irrigation District, and Big Bend Irrigation District; Notice of Application for Amendment of License and Soliciting Comments, Motions To Intervene, and Protests

September 26, 2007.

Take notice that the following hydroelectric application has been filed with the Commission and is available for public inspection:

a. *Application Type:* Amendment of License.

b. *Project No.:* 4656–020.

c. *Date Filed:* August 1, 2007.

d. *Applicant:* Boise-Kuna Irrigation District, Nampa & Meridian Irrigation District, New York Irrigation District, Wilder Irrigation District, and Big Bend Irrigation District (Districts).

e. *Name of Project:* Arrowrock Dam Hydroelectric Project.

f. *Location:* The project will be located at the U.S. Bureau of Reclamation's (Reclamation) existing Arrowrock Dam and Reservoir on the South Fork of the Boise River, in Elmore and Ada Counties, Idaho. Parts of the project would occupy lands managed by Reclamation and the U.S. Corps of Engineers and lands managed by the U.S. Forest Service within the Boise National Forest.

g. *Filed Pursuant to:* Federal Power Act, 16 U.S.C. 791a–825r.

h. *Applicant Contact:* Albert P. Barker, Barker Rosholt & Simpson LLP, 1010 West Jefferson Street, Suite 102, Boise, Idaho 83701; telephone (208) 336–0700.

i. *FERC Contact:* Linda Stewart, telephone (202) 502–6680, and e-mail: *linda.stewart@ferc.gov*.

j. *Deadline for filing comments, motions to intervene, and protest:* October 29, 2007.

All documents (original and eight copies) should be filed with: Secretary, Federal Energy Regulatory Commission, 888 First Street, NE., Washington, DC 20426.

The Commission's Rules of Practice and Procedure require all interveners filing documents with the Commission to serve a copy of that document on each person whose name appears on the official service list for the project. Further, if an intervener files comments or documents with the Commission relating to the merits of an issue that

may affect the responsibilities of a particular resource agency, they must also serve a copy of the document on that resource agency. A copy of any motion to intervene must also be served upon each representative of the Applicant specified in the particular application.

k. *Description of Request:* (1) *Extension of Time:* The Districts request an extension of time for the commencement of project construction to December 13, 2009, pursuant to Public Law 109–383. The Districts also propose changes, where necessary, to dates or time periods specified in various license articles such that the dates or time periods for taking action would be tied to an order amending the project license; (2) *Amendment to Project Design:* The Districts propose to install two 7.5-megawatt (MW) generating units with a total installed capacity of 15 MW instead of installing two 30–MW generating units with a total installed capacity of 60 MW, as authorized in the March 27, 1989 Order Issuing License. The Districts also propose to change the project's transmission line, which would decrease in length by approximately 10 miles and would eliminate the need to use any lands managed by the Bureau of Land Management. The Districts request the deletion and/or revision of certain license articles that are directly related to the above proposed design changes.

l. *Locations of the Application:* A copy of the application is available for inspection and reproduction at the Commission's Public Reference Room, located at 888 First Street, NE., Room 2A, Washington, DC 20426, or by calling (202) 502–8371. This filing may also be viewed on the Commission's Web site at *http://www.ferc.gov* using the ''eLibrary'' link. Enter the docket number excluding the last three digits in the docket number field to access the document. You may also register online at *http://www.ferc.gov/docs-filing/esubscription.asp* to be notified via email of new filings and issuances related to this or other pending projects. For assistance, call 1–866–208–3676 or e-mail *FERCOnlineSupport@ferc.gov*, for TTY, call (202) 502–8659. A copy is also available for inspection and reproduction at the address in item (h) above.

m. Individuals desiring to be included on the Commission's mailing list should so indicate by writing to the Secretary of the Commission.

n. *Comments, Protests, or Motions to Intervene:* Anyone may submit comments, a protest, or a motion to intervene in accordance with the requirements of Rules of Practice and Procedure, 18 CFR 385.210, .211, .214. In determining the appropriate action to take, the Commission will consider all protests or other comments filed, but only those who file a motion to intervene in accordance with the Commission's Rules may become a party to the proceeding. Any comments, protests, or motions to intervene must be received on or before the specified comment date for the particular application.

o. Any filings must bear in all capital letters the title ''COMMENTS'', ''PROTEST'', or ''MOTION TO INTERVENE'', as applicable, and the Project Number of the particular application to which the filing refers.

p. *Agency Comments:* Federal, State, and local agencies are invited to file comments on the described application. A copy of the application may be obtained by agencies directly from the Applicant. If an agency does not file comments within the time specified for filing comments, it will be presumed to have no comments. One copy of an agency's comments must also be sent to the Applicant's representatives.

q. Comments, protests and interventions may be filed electronically via the Internet in lieu of paper. See, 18 CFR 385.2001(a)(1)(iii) and the instructions on the Commission's Web site at *http://www.ferc.gov* under the ''e-Filing'' link.

Kimberly D. Bose,

Secretary.

[FR Doc. E7–19780 Filed 10–5–07; 8:45 am]

BILLING CODE 6717–01–P

DEPARTMENT OF ENERGY

Federal Energy Regulatory Commission

[Project No. 12788–000]

Mountain Property Resources, LLC; Notice of Application Accepted for Filing and Soliciting Motions To Intervene, Protests, and Comments

October 1, 2007.

Take notice that the following hydroelectric application has been filed with the Commission and is available for public inspection:

a. *Type of Application:* Preliminary Permit.

b. *Project No.:* 12788–000.

c. *Date filed:* March 22, 2007.

d. *Applicant:* Mountain Property Resources, LLC.

e. *Name of Project:* Grace Project.

f. *Location:* The project would be located on Fall Creek in Eagle County, Colorado. The project will occupy approximately 3.8 acres of federal land within the White River National Forest.

g. *Filed Pursuant to:* Federal Power Act, 16 U.S.C. 791(a)–825(r).

h. *Applicant Contacts:* Steven R. Coley, Mountain Property Resources, LLC, 1857 County Road 109, Glenwood Springs, CO 81601, phone: (970) 230–0579.

i. *FERC Contact:* Henry Woo, (202) 502–8872.

j. *Deadline for filing comments, protests, and motions to intervene:* 60 days from the issuance date of this notice.

The Commission's Rules of Practice and Procedure require all intervenors filing documents with the Commission to serve a copy of that document on each person in the official service list for the project. Further, if an intervenor files comments or documents with the Commission relating to the merits of an issue that may affect the responsibilities of a particular resource agency, they must also serve a copy of the document on that resource agency.

k. *Description of Project:* The proposed project would consist of: (1) An existing water diversion structure, (2) a proposed 3,000-foot-long steel penstock, (3) an existing powerhouse containing a proposed generating unit with an installed capacity of 140 kilowatts, (4) a proposed 25 kilovolt transmission line; and (5) appurtenant facilities. The applicant estimates the average annual generation would be 1.209 gigawatt-hours and would be sold to a local utility.

l. *Locations of Applications:* A copy of the application is available for inspection and reproduction at the Commission in the Public Reference Room, located at 888 First Street, NE., Room 2A, Washington, DC 20426, or by calling (202) 502–8371. This filing may also be viewed on the Commission's Web site at *http://www.ferc.gov* using the ''eLibrary'' link. Enter the docket number excluding the last three digits in the docket number field to access the document. For assistance, call toll-free 1–866–208–3676 or e-mail *FERCOnlineSupport@ferc.gov*. For TTY, call (202) 502–8659. A copy is also available for inspection and reproduction at the address in item h above.

m. Individuals desiring to be included on the Commission's mailing list should so indicate by writing to the Secretary of the Commission.

n. Competing Preliminary Permit—Anyone desiring to file a competing application for preliminary permit for a proposed project must submit the competing application itself, or a notice of intent to file such an application, to

the Commission on or before the specified comment date for the particular application (see 18 CFR 4.36). Submission of a timely notice of intent allows an interested person to file the competing preliminary permit application no later than 30 days after the specified comment date for the particular application. A competing preliminary permit application must conform with 18 CFR 4.30 and 4.36.

o. Competing Development Application—Any qualified development applicant desiring to file a competing development application must submit to the Commission, on or before a specified comment date for the particular application, either a competing development application or a notice of intent to file such an application. Submission of a timely notice of intent to file a development application allows an interested person to file the competing application no later than 120 days after the specified comment date for the particular application. A competing license application must conform with 18 CFR 4.30 and 4.36.

p. Notice of Intent—A notice of intent must specify the exact name, business address, and telephone number of the prospective applicant, and must include an unequivocal statement of intent to submit, if such an application may be filed, either a preliminary permit application or a development application (specify which type of application). A notice of intent must be served on the applicant(s) named in this public notice.

q. Proposed Scope of Studies under Permit—A preliminary permit, if issued, does not authorize construction. The term of the proposed preliminary permit would be 36 months. The work proposed under the preliminary permit would include economic analysis, preparation of preliminary engineering plans, and a study of environmental impacts. Based on the results of these studies, the Applicant would decide whether to proceed with the preparation of a development application to construct and operate the project.

r. Comments, Protests, or Motions to Intervene—Anyone may submit comments, a protest, or a motion to intervene in accordance with the requirements of Rules of Practice and Procedure, 18 CFR 385.210, .211, .214. In determining the appropriate action to take, the Commission will consider all protests or other comments filed, but only those who file a motion to intervene in accordance with the Commission's Rules may become a party to the proceeding. Any comments, protests, or motions to intervene must be received on or before the specified comment date for the particular application.

Comments, protests and interventions may be filed electronically via the Internet in lieu of paper; See 18 CFR 385.2001(a)(1)(iii) and the instructions on the Commission's Web site under ''e-filing'' link. The Commission strongly encourages electronic filing.

s. Filing and Service of Responsive Documents—Any filings must bear in all capital letters the title ''COMMENTS'', ''RECOMMENDATIONS FOR TERMS AND CONDITIONS'', ''PROTEST'',''COMPETING APPLICATION'' or ''MOTION TO INTERVENE'', as applicable, and the Project Number of the particular application to which the filing refers. Any of the above-named documents must be filed by providing the original and the number of copies provided by the Commission's regulations to: The Secretary, Federal Energy Regulatory Commission, 888 First Street, NE., Washington, DC 20426. A copy of any motion to intervene must also be served upon each representative of the Applicant specified in the particular application.

t. Agency Comments—Federal, state, and local agencies are invited to file comments on the described application. A copy of the application may be obtained by agencies directly from the Applicant. If an agency does not file comments within the time specified for filing comments, it will be presumed to have no comments. One copy of an agency's comments must also be sent to the Applicant's representatives.

Kimberly D. Bose,

Secretary.

[FR Doc. E7–19788 Filed 10–5–07; 8:45 am]

BILLING CODE 6717–01–P

DEPARTMENT OF ENERGY

Federal Energy Regulatory Commission

[Project No. 12741–001]

Albany Engineering Corporation; Notice of Intent To File License Application, Filing of Pre-Application Document, Commencement of Licensing Proceeding, Scoping Meetings, Solicitation of Comments on the Pad and Scoping Document, and Identification of Issues and Associated Study Requests

October 1, 2007.

a. *Type of Filing:* Notice of Intent to File License Application for a New License and Commencing Licensing Proceeding.

b. *Project No.:* 12741–001.

c. *Dated Filed:* September 20, 2006.

d. *Submitted By:* Albany Engineering Corporation.

e. *Name of Project:* Thomson Hydroelectric Project.

f. *Location:* On the Hudson River in the hamlet of Thomson, New York, within Saratoga and Washington Counties. No federal lands are involved.

g. *Filed Pursuant to:* 18 CFR part 5 of the Commission's Regulations

h. *Potential Applicant Contact:* James Besha, Albany Engineering Corp., 447 New Karner Road, Albany, New York 12205, (518) 456–7712.

i. *FERC Contact:* Michael Spencer, *michael.spencer@ferc.gov*, (202) 502–6093.

j. We are asking federal, state, local, and tribal agencies with jurisdiction and/or special expertise with respect to environmental issues to cooperate with us in the preparation of the environmental document. Agencies who would like to request cooperating status should follow the instructions for filing comments described in paragraph o below. Cooperating agencies should note the Commission's policy that agencies that cooperate in the preparation of the environmental document cannot also intervene. *See,* 94 FERC ¶ 61,076 (2001).

k. *With this notice, we are initiating informal consultation with:* (a) The U.S. Fish and Wildlife Service and/or NOAA Fisheries under section 7 of the Endangered Species Act and the joint agency regulations thereunder at 50 CFR, part 402; and (b) the State Historic Preservation Officer, as required by Section 106, National Historical Preservation Act, and the implementing regulations of the Advisory Council on Historic Preservation at 36 CFR 800.2.

l. With this notice, we are designating Albany Engineering Corporation as the Commission's non-federal representative for carrying out informal consultation, pursuant to section 7 of the Endangered Species Act and section 106 of the National Historic Preservation Act.

m. Albany Engineering Corporation filed a Pre-Application Document (PAD; including a proposed process plan and schedule) with the Commission, pursuant to 18 CFR 5.6 of the Commission's regulations. The Commission issued the Scoping Document for the proposed Thomson Project on October 1, 2007.

n. A copy of the PAD and the scoping document are available for review at the Commission in the Public Reference Room or may be viewed on the

Commission's Web site (*http://www.ferc.gov*), using the ''eLibrary'' link. Enter the docket number, excluding the last three digits in the docket number field to access the document. For assistance, contact FERC Online Support at *FERCONlineSupport@ferc.gov* or toll free at 1–866–208–3676, of for TTY, (202) 502–8659. A copy is also available for inspection and reproduction at the address in paragraph h.

Register online at *http://ferc.gov/esubscribenow.htm* to be notified via e-mail of new filing and issuances related to this or other pending projects. For assistance, contact FERC Online Support.

o. With this notice, we are setting the effective date for the commencement of licensing proceeding as October 8, 2007, and soliciting comments on the PAD and the scoping document, as well as study requests. Note that although this notice and the scoping document are being issued earlier than the commencement date the process plan milestones are based on the commencement date. All comments on the PAD and the scoping document, and study requests should be sent to the address above in paragraph h. In addition, all comments on the PAD and the scoping document, study requests, requests for cooperating agency status, and all communications to and from Commission staff related to the merits of the potential application (original and eight copies) must be filed with the Commission at the following address: Kimberly D. Bose, Secretary, Federal Energy Regulatory Commission, 888 First Street, NE., Washington, DC 20426. All filings with the Commission must include on the first page, the project name (Thomson Project) and number (P–12741–001), and bear the heading ''Comments on Pre-Application Document,'' ''Study Requests,'' ''Comments on Scoping Document 1,'' ''Request for Cooperating Agency Status,'' or ''Communications to and from Commission Staff.'' Any individual or entity interested in submitting study requests, commenting on the PAD or the scoping document, and any agency requesting cooperating status must do so by November 13, 2007.

Comments on the PAD and the scoping document, study requests, requests for cooperating agency status, and other permissible forms of communications with the Commission may be filed electronically via the Internet in lieu of paper. The Commission strongly encourages electronic filings. See 18 CFR 385.2001(a)(1)(iii) and the instructions on the Commission's Web site (*http://www.ferc.gov*) under the ''e-filing'' link.

p. Although our current intent is to prepare an environmental assessment (EA), there is the possibility that an Environmental Impact Statement (EIS) will be required. Nevertheless, this meeting will satisfy the NEPA scoping requirements, irrespective of whether an EA or EIS is issued by the Commission.

Scoping Meetings

Commission staff will hold two scoping meetings in the vicinity of the project at the time and place noted below. The daytime meeting will focus on resource agency, Indian tribes, and non-governmental organization concerns, while the evening meeting is primarily for receiving input from the public. We invite all interested individuals, organizations, and agencies to attend one or both of the meetings, and to assist staff in identifying particular study needs, as well as the scope of environmental issues to be addressed in the environmental document. The times and locations of these meetings are as follows:

Evening Scoping Meeting

Date: Wednesday, November 7, 2007.
Time: 6 p.m.
Location: Saratoga Hotel & Conference Center, 534 Broadway, Saratoga Springs, New York.
Phone: (202) 502–6093.

Daytime Scoping Meeting

Date: Thursday, November 8, 2007.
Time: 10 a.m.
Location: Saratoga Hotel & Conference Center, 534 Broadway, Saratoga Springs, New York.
Phone: (202) 502–6093.

The scoping document, which outlines the issues to be addressed in the environmental document, has been mailed to the individuals and entities on the Commission's mailing list. Copies of the scoping document will be available at the scoping meetings, and may be viewed on the web at *http://www.ferc.gov,* using the ''eLibrary'' link. Follow the directions for accessing information in paragraph n. Depending on the extent of comments received, Scoping Document 2 may or may not be issued.

Site Visit

Albany Engineering Corporation will conduct a tour of the proposed project site at 3 p.m. on Wednesday, November 7, 2007. All participants should meet at the Lock C5 and Hudson Crossing Park, located off Route 4 and 32 in Schuylerville, New York. All participants are responsible for their own transportation. Anyone with questions about the site visit should contact Mr. James Besha of Albany Engineering Corporation at (518) 456–7712 on or before October 10, 2007.

Scoping Meeting Objectives

At the scoping meetings, staff will: (1) Present the proposed list of issues to be addressed in the EA; (2) review and discuss existing conditions and resource agency management objectives; (3) review and discuss existing information and identify preliminary information and study needs; (4) review and discuss the process plan and schedule for pre-filing activity that incorporates the time frames provided for in part 5 of the Commission's regulations and, to the extent possible, maximizes coordination of federal, state, and tribal permitting and certification processes; and (5) discuss requests by any federal or state agency or Indian tribe acting as a cooperating agency for development of an environmental document.

Meeting participants should come prepared to discuss their issues and/or concerns. Please review the PAD in preparation for the scoping meetings. Directions on how to obtain a copy of the PAD and the scoping document are included in item n of this document.

Meeting Procedures

The meetings will be recorded by a stenographer and will become part of the formal record of the Commission proceeding on the project.

Kimberly D. Bose,
Secretary.

[FR Doc. E7–19789 Filed 10–5–07; 8:45 am]
BILLING CODE 6717–01–P

DEPARTMENT OF ENERGY

Federal Energy Regulatory Commission

[Docket No. RP07–511–000]

El Paso Natural Gas Company; Notice of Technical Conference

September 25, 2007.

Take notice that a technical conference will be held on Wednesday, October 10, 2007, at 9 a.m., in a room to be designated at the offices of the Federal Energy Regulatory Commission, 888 First Street, NE., Washington, DC 20426.

The technical conference will address all issues raised by El Paso Natural Gas Company's filing and how the filing relates to prior Commission orders and policy.

FERC conferences are accessible under section 508 of the Rehabilitation

Act of 1973. For accessibility accommodations please send an e-mail to *accessibility@ferc.gov* or call toll free (866) 208–3372 (voice) or 202–502–8659 (TTY), or send a fax to 202–208–2106 with the required accommodations.

All interested parties and staff are permitted to attend. For further information please contact April Ballou at (202) 502–6537 or e-mail *April.Ballou@ferc.gov.*

Kimberly D. Bose,

Secretary.

[FR Doc. E7–19767 Filed 10–5–07; 8:45 am]

BILLING CODE 6717–01–P

ENVIRONMENTAL PROTECTION AGENCY

[FRL–8480–1]

Science Advisory Board Staff Office; Clean Air Scientific Advisory Committee (CASAC); Notification of a Public Advisory Committee Meeting of the CASAC Oxides of Nitrogen (NO_X) and Sulfur Oxides (SO_x) Primary NAAQS Review Panel

AGENCY: Environmental Protection Agency (EPA).

ACTION: Notice.

SUMMARY: The Environmental Protection Agency (EPA) Science Advisory Board (SAB) Staff Office announces a public meeting of the Clean Air Scientific Advisory Committee's (CASAC) Oxides of Nitrogen (NO_X) and Sulfur Oxides (SOx) Primary NAAQS Review Panel (Panel) to conduct a peer review of EPA's *Integrated Science Assessment for Oxides of Nitrogen—Health Criteria (First External Review Draft)* (EPA/600/R–07/093, August 2007) and to conduct a consultation on the EPA's *Nitrogen Dioxide Health Assessment Plan: Scope and Methods for Exposure and Risk Assessment.*

DATES: The meeting will be held from 8:30 a.m. (Eastern Standard Time) on Wednesday, October 24, 2007 through 4 p.m. (Eastern Standard Time) on Thursday, October 25, 2007.

Location: The meeting will take place at the Marriott at Research Triangle Park, 4700 Guardian Drive, Durham, NC, 27703, telephone: (919) 941–6200.

FOR FURTHER INFORMATION CONTACT: Any member of the public who wishes to submit a written or brief oral statement (five minutes or less) or wants further information concerning this meeting must contact Dr. Angela Nugent, Designated Federal Officer (DFO), EPA Science Advisory Board (1400F), U.S. Environmental Protection Agency, 1200 Pennsylvania Avenue, NW., Washington, DC 20460; via telephone/voice mail: (202) 343–9981; fax: (202) 233–0643; or e-mail at: *nugent.angela@epa.gov.* General information concerning the CASAC or the EPA Science Advisory Board can be found on the EPA Web site at: *http://www.epa.gov/sab.*

SUPPLEMENTARY INFORMATION:

Background

EPA is in the process of reviewing the primary National Ambient Air Quality Standards (NAAQS) for nitrogen oxides (NO_X). Under the Clean Air Act, EPA is required to carry out a periodic review and revision, as appropriate, of the air quality criteria and the NAAQS for six criteria air pollutants, which include NO_X. Primary standards set limits to protect public health, including the health of ''sensitive'' populations such as asthmatics, children, and the elderly.

As part of that process, EPA's Office of Research and Development (ORD) has completed a draft document, *Integrated Science Assessment for Oxides of Nitrogen—Health Criteria (First External Review Draft)* (EPA/600/R–07/093, August 2007, 72 FR 50107) and has requested that CASAC peer review the document. EPA's Office of Air and Radiation (OAR) has also completed a document entitled *Nitrogen Dioxide Health Assessment Plan: Scope and Methods for Exposure and Risk Assessment* and has requested that the CASAC provide consultative advice to assist the Agency in developing human exposure and health risk assessments for nitrogen dioxide (NO_2). EPA has released an integrated plan for all aspects of this review of the primary NO_2 standard, *Integrated Review Plan for the Primary National Ambient Air Quality Standard for Nitrogen Dioxide* (August 2007), which reflects advice provided by the CASAC panel through a consultation on a draft of that document, *Draft Plan for Review of the Primary National Ambient Air Quality Standard for Nitrogen Dioxide* (February 2007). Background information about the CASAC NO_X review activities and about formation of the CASAC Panel was published in the **Federal Register** on August 7, 2006 (71 FR 44695–44696).

Technical Contact: Any questions concerning EPA's *Integrated Science Assessment for Oxides of Nitrogen—Health Criteria (First External Review Draft)* should be directed to Dr. Dennis Kotchmar, ORD (by telephone: 919–541–4158, or e-mail: *kotchmar.dennis@epa.gov*). Any questions concerning EPA's *Nitrogen Dioxide Health Assessment Plan: Scope and Methods for Exposure and Risk Assessment* should be directed to Dr. Scott Jenkins, OAR (by telephone: 919–541–1167, or e-mail: *jenkins.scott@epa.gov*).

Availability of Meeting Materials: EPA–ORD's *Integrated Science Assessment for Oxides of Nitrogen—Health Criteria (First External Review Draft)* can be accessed on EPA's National Center for Environmental Assessment Web site at: *http://cfpub.epa.gov/ncea/cfm/recordisplay.cfm?deid=181712.* EPA–*OAR's Nitrogen Dioxide Health Assessment Plan: Scope and Methods for Exposure and Risk Assessment* will be accessible via the Agency's Office of Air Quality Planning and Standards Web site at: *http://www.epa.gov/ttn/naaqs/standards/nox/s_nox_cr_pd.html.* Agendas and materials in support of meeting will be placed on the SAB Web site at: *http://www.epa.gov/sab* in advance of the meeting.

Procedures for Providing Public Input: Interested members of the public may submit relevant written or oral information for the CASAC Panel to consider during the advisory process. *Oral Statements:* In general, individuals or groups requesting an oral presentation at a public meeting will be limited to five minutes per speaker, with no more than a total of one hour for all speakers. Interested parties should contact Dr. Nugent, DFO, in writing (preferably via e-mail) by October 19, 2007 at the contact information noted above, to be placed on the public speaker list for this meeting. *Written Statements:* Written statements should be received in the SAB Staff Office by October 19, 2007, so that the information may be made available to the Panel for their consideration prior to this meeting. Written statements should be supplied to the DFO in the following formats: one hard copy with original signature (optional), and one electronic copy via e-mail (acceptable file format: Adobe Acrobat PDF, WordPerfect, MS Word, MS PowerPoint, or Rich Text files in IBM-PC/Windows 98/2000/XP format).

Accessibility: For information on access or services for individuals with disabilities, please contact Dr. Nugent at the phone number or e-mail address noted above, preferably at least ten days prior to the meeting, to give EPA as much time as possible to process your request.

Dated: September 28, 2007.

Anthony F. Maciorowski,

Deputy Director, EPA Science Advisory Board Staff Office.

[FR Doc. E7–19815 Filed 10–5–07; 8:45 am]

BILLING CODE 6560–50–P

FARM CREDIT ADMINISTRATION

Sunshine Act; Farm Credit Administration Board; Regular Meeting

AGENCY: Farm Credit Administration.

SUMMARY: Notice is hereby given, pursuant to the Government in the Sunshine Act (5 U.S.C. 552b(e)(3)), of the regular meeting of the Farm Credit Administration Board (Board).

DATE AND TIME: The regular meeting of the Board will be held at the offices of the Farm Credit Administration in McLean, Virginia, on October 11, 2007, from 9 a.m. until such time as the Board concludes its business.

FOR FURTHER INFORMATION CONTACT: Roland E. Smith, Secretary to the Farm Credit Administration Board, (703) 883–4009, TTY (703) 883–4056.

ADDRESSES: Farm Credit Administration, 1501 Farm Credit Drive, McLean, Virginia 22102–5090.

SUPPLEMENTARY INFORMATION: Parts of this meeting of the Board will be open to the public (limited space available), and parts will be closed to the public. In order to increase the accessibility to Board meetings, persons requiring assistance should make arrangements in advance. The matters to be considered at the meeting are:

Open Session

A. Approval of Minutes

- September 13, 2007 (Open and Closed).

B. New Business

- Disclosure to Investors in Systemwide and Consolidated Bank Debt Obligations of the Farm Credit System—Direct Final Rule.

C. Reports

- Office of Examination—Quarterly Report.

Closed Session

- Office of Examination—Supervisory and Oversight Activities.[1]

Dated: October 4, 2007.

Roland E. Smith,

Secretary, Farm Credit Administration Board.

[FR Doc. 07–4997 Filed 10–4–07; 2:50 pm]

BILLING CODE 6705–01–P

[1] Session Closed-Exempt pursuant to 5 U.S.C. 552b(c)(8) and (9).

FEDERAL DEPOSIT INSURANCE CORPORATION

FDIC Advisory Committee on Economic Inclusion (ComE-IN); Notice of Meeting

AGENCY: Federal Deposit Insurance Corporation (FDIC).

ACTION: Notice of open meeting.

SUMMARY: In accordance with the Federal Advisory Committee Act, notice is hereby given of a meeting of the FDIC Advisory Committee on Economic Inclusion, which will be held in Washington, DC. The Advisory Committee will provide advice and recommendations on initiatives to expand access to banking services by underserved populations.

DATES: Wednesday, October 24, 2007, from 8:30 a.m. to 4:30 p.m.

ADDRESSES: The meeting will be held in the FDIC Board Room on the sixth floor of the FDIC Building located at 550 17th Street, NW., Washington, DC.

FOR FURTHER INFORMATION CONTACT: Requests for further information concerning the meeting may be directed to Mr. Robert E. Feldman, Committee Management Officer of the FDIC, at (202) 898–7043.

SUPPLEMENTARY INFORMATION:

Agenda: The agenda will be focused on money services businesses and their access to the banking system. The agenda may be subject to change. Any changes to the agenda will be announced at the beginning of the meeting.

Type of Meeting: The meeting will be open to the public, limited only by the space available on a first-come, first-served basis. For security reasons, members of the public will be subject to security screening procedures and must present a valid photo identification to enter the building. The FDIC will provide attendees with auxiliary aids (e.g., sign language interpretation) required for this meeting. Those attendees needing such assistance should call (703) 562–6067 (Voice or TTY) at least two days before the meeting to make necessary arrangements. Written statements may be filed with the committee before or after the meeting.

Federal Deposit Insurance Corporation.

Dated: October 3, 2007.

Robert E. Feldman,

Committee Management Officer.

[FR Doc. E7–19761 Filed 10–5–07; 8:45 am]

BILLING CODE 6714–01–P

FEDERAL HOUSING FINANCE BOARD

Sunshine Act Meeting Notice; Announcing a Partially Open Meeting of the Board of Directors

TIME AND DATE: The open meeting of the Board of Directors is scheduled to begin at 10 a.m. on Wednesday, October 10, 2007. The closed portion of the meeting will follow immediately the open portion of the meeting.

PLACE: Board Room, First Floor, Federal Housing Finance Board, 1625 Eye Street, NW., Washington, DC 20006.

STATUS: The first portion of the meeting will be open to the public. The final portion of the meeting will be closed to the public.

MATTER TO BE CONSIDERED AT THE OPEN PORTION: Appointment of Financing Corporation Directors.

MATTER TO BE CONSIDERED AT THE CLOSED PORTION: Periodic Update of Examination Program Development and Supervisory Findings.

CONTACT PERSON FOR MORE INFORMATION: Shelia Willis, Paralegal Specialist, Office of General Counsel, at 202–408–2876 or *williss@fhfb.gov*.

Dated: October 3, 2007.

By the Federal Housing Finance Board.

Neil R. Crowley,

Acting General Counsel.

[FR Doc. 07–4973 Filed 10–4–07; 10:36 am]

BILLING CODE 6725–01–P

FEDERAL RESERVE SYSTEM

Change in Bank Control Notices; Acquisition of Shares of Bank or Bank Holding Companies

The notificants listed below have applied under the Change in Bank Control Act (12 U.S.C. 1817(j)) and § 225.41 of the Board's Regulation Y (12 CFR 225.41) to acquire a bank or bank holding company. The factors that are considered in acting on the notices are set forth in paragraph 7 of the Act (12 U.S.C. 1817(j)(7)).

The notices are available for immediate inspection at the Federal Reserve Bank indicated. The notices also will be available for inspection at the office of the Board of Governors. Interested persons may express their views in writing to the Reserve Bank indicated for that notice or to the offices of the Board of Governors. Comments must be received not later than October 23, 2007.

A. Federal Reserve Bank of St. Louis (Glenda Wilson, Community Affairs Officer) 411 Locust Street, St. Louis, Missouri 63166–2034:

1. Alexander Peyton Golden IV, Fort Smith, Arkansas; to acquire voting shares of ACME Holding Company, Inc. Employee Stock Ownership Plan, and thereby indirectly acquire voting shares of Acme Holding Company, Inc., and Allied Bank, all of Mulberry, Arkansas.

B. Federal Reserve Bank of Kansas City (Todd Offenbacker, Assistant Vice President) 925 Grand Avenue, Kansas City, Missouri 64198–0001:

1. Emmalie Cowherd; Benjamin Polen; Robert Cowherd; Andrew Cowherd; Jonathan Cowherd, all of Carrollton, Missouri; and Robert Schwandt, Red Lodge, Montana; to retain voting shares of Carroll County Bancshares, Inc., and thereby indirectly retain voting shares of Carroll County Trust Company, both of Carrollton, Missouri, as the Emmalie Gessner Cowherd Family group. Ms. Cowherd proposes to control shares held in her own name, through the Emmalie Gessner Cowherd Revocable Living Trust and through the Clifton R. Cowherd Estate. Messrs. Benjamin Polen, Robert Cowherd, Robert Schwandt, Andrew Cowherd and Jonathan Cowherd, Carrollton will control shares held in their own names. Both Andrew Cowherd and Jonathan Cowherd will also hold shares through the C.R. Cowherd Trust TUWFBO, Kansas City, Missouri.

Board of Governors of the Federal Reserve System, October 3, 2007.

Robert deV. Frierson,

Deputy Secretary of the Board.

[FR Doc. E7–19802 Filed 10–5–07; 8:45 am]

BILLING CODE 6210–01–S

FEDERAL RESERVE SYSTEM

Formations of, Acquisitions by, and Mergers of Bank Holding Companies

The companies listed in this notice have applied to the Board for approval, pursuant to the Bank Holding Company Act of 1956 (12 U.S.C. 1841 *et seq.*) (BHC Act), Regulation Y (12 CFR Part 225), and all other applicable statutes and regulations to become a bank holding company and/or to acquire the assets or the ownership of, control of, or the power to vote shares of a bank or bank holding company and all of the banks and nonbanking companies owned by the bank holding company, including the companies listed below.

The applications listed below, as well as other related filings required by the Board, are available for immediate inspection at the Federal Reserve Bank indicated. The application also will be available for inspection at the offices of the Board of Governors. Interested persons may express their views in writing on the standards enumerated in the BHC Act (12 U.S.C. 1842(c)). If the proposal also involves the acquisition of a nonbanking company, the review also includes whether the acquisition of the nonbanking company complies with the standards in section 4 of the BHC Act (12 U.S.C. 1843). Unless otherwise noted, nonbanking activities will be conducted throughout the United States. Additional information on all bank holding companies may be obtained from the National Information Center Web site at *www.ffiec.gov/nic/*.

Unless otherwise noted, comments regarding each of these applications must be received at the Reserve Bank indicated or the offices of the Board of Governors not later than November 2, 2007.

A. Federal Reserve Bank of Atlanta (David Tatum, Vice President) 1000 Peachtree Street, NE., Atlanta, Georgia 30309:

1. Franklin Financial Network, Inc.; to become a bank holding company by acquiring 100 percent of the voting shares of Franklin Synergy Bank (in organization), both of Franklin, Tennessee.

2. FGB Holding Company; to become a bank holding company by acquiring 100 percent of the voting shares of First Guaranty Bank and Trust Company of Jacksonville, both of Jacksonville, Florida.

Board of Governors of the Federal Reserve System, October 3, 2007.

Robert deV. Frierson,

Deputy Secretary of the Board.

[FR Doc. E7–19803 Filed 10–5–07; 8:45 am]

BILLING CODE 6210–01–S

FEDERAL RESERVE SYSTEM

Notice of Proposals to Engage in Permissible Nonbanking Activities or to Acquire Companies that are Engaged in Permissible Nonbanking Activities

The companies listed in this notice have given notice under section 4 of the Bank Holding Company Act (12 U.S.C. 1843) (BHC Act) and Regulation Y (12 CFR Part 225) to engage *de novo*, or to acquire or control voting securities or assets of a company, including the companies listed below, that engages either directly or through a subsidiary or other company, in a nonbanking activity that is listed in § 225.28 of Regulation Y (12 CFR 225.28) or that the Board has determined by Order to be closely related to banking and permissible for bank holding companies. Unless otherwise noted, these activities will be conducted throughout the United States.

Each notice is available for inspection at the Federal Reserve Bank indicated. The notice also will be available for inspection at the offices of the Board of Governors. Interested persons may express their views in writing on the question whether the proposal complies with the standards of section 4 of the BHC Act. Additional information on all bank holding companies may be obtained from the National Information Center Web site at *www.ffiec.gov/nic/*.

Unless otherwise noted, comments regarding the applications must be received at the Reserve Bank indicated or the offices of the Board of Governors not later than October 23, 2007.

A. Federal Reserve Bank of Atlanta (David Tatum, Vice President) 1000 Peachtree Street, NE., Atlanta, Georgia 30309:

1. CapGen Capital Group LLC, Washington, DC; to directly engage *de novo* in acting as agent for the private placement of securities, pursuant to section 225.28(b)(7)(iii) of Reuglation Y.

Board of Governors of the Federal Reserve System, October 3, 2007.

Robert deV. Frierson,

Deputy Secretary of the Board.

[FR Doc.E7–19804 Filed 10–5–07; 8:45 am]

BILLING CODE 6210–01–S

DEPARTMENT OF HEALTH AND HUMAN SERVICES

Notice of a Cooperative Agreement with Meharry Medical College

AGENCY: Department of Health and Human Services, Office of the Secretary, Office of Public Health and Science, Office of Minority Health.

ACTION: Notice.

SUMMARY: The Office of Minority Health (OMH), Office of Public Health and Science, announces that it will enter into a cooperative agreement with Meharry Medical College (MMC). This cooperative agreement is an umbrella cooperative agreement and will establish the programmatic framework in which specific projects can be supported by various agencies during the project period.

The purpose of this cooperative agreement is to strengthen the nation's capacity to prepare health professionals from disadvantaged backgrounds to serve minority populations and to develop a national model for improving health care delivery to indigent and underserved citizens. The ultimate goal is to improve the health status of minorities and disadvantaged people and increase the diversity of the health-related workforce.

DATES: Persons requesting additional information about this notice should contact the OPHS Office of Grants Management. This cooperative agreement will be effective September 28, 2007.

Authority: This cooperative agreement is authorized under 42 U.S.C. 300u–6, section 1707 of the Public Health Service Act, as amended.

The Catalogue of Federal Domestic Assistance number is 93.004.

FOR FURTHER INFORMATION CONTACT: If you are interested in obtaining additional information regarding this project, contact Ms. Sonsiere Cobb-Souza, Director, Division of Program Operations, Office of Minority Health, 1101 Wootton Parkway, Suite 600, Rockville, Maryland 20852 or telephone (240) 453–8444.

SUPPLEMENTARY INFORMATION:

Funding Opportunity Description

Background

The health status of African Americans is dependent on the availability of a substantial pool of black physicians because these doctors are much more likely than their white colleagues to locate their practices in areas with large minority populations.[1] According to the Joint Center for Political and Economic Studies, these areas are usually medically underserved as well.

Furthermore, 46 percent of the patients of black doctors are black, and nearly six times as many black patients are cared for by black physicians as by non-black physicians.[2] Studies also show that minority patients have higher levels of satisfaction in race/ethnicity concordant settings. Patients tend to rate their physicians' communication style, which is correlated with patient satisfaction, higher in race/ethnicity-concordant relationships.[3]

Throughout the twenty-first century, the number of racial and ethnic minorities is expected to steadily increase and, by mid-century, they will constitute a new U.S. majority. The African American population is expected to almost double from 36 million to 61 million.[4] MMC has graduated more black physicians than any other medical school. In order to continue this educational trend and flow of black physicians into medically underserved areas, OMH will enter into an umbrella cooperative agreement with MMC. Assistance will be provided only to MMC to accomplish the objectives of this cooperative agreement because it has the following combination of factors:

1. The majority of MMC's graduates practice in medically underserved rural and inner city areas. Of its almost 4,000 living alumni throughout the United States, 78 percent serve lower socioeconomic and disadvantaged urban and rural communities.
2. MMC has historically trained a significant number of African American physicians and dentists in the United States. More than 15 percent of African Americans who receive doctoral degrees in medicine, dentistry, and the biomedical sciences each year are Meharry graduates.
3. In each of the past five years, MMC has graduated the largest number of African American Ph.D.s in the biomedical sciences of any academic institution in the nation.
4. MMC is the largest private, independent, historically minority institution in the United States exclusively dedicated to health professions education and training.

Award Information

This cooperative agreement will be awarded in FY 2007 for a 12-month budget period within a project period of five years. Depending upon the types of projects and availability of funds, it is anticipated that this cooperative agreement will initially receive approximately $1,200,000. Continuation awards within the project period will be made on the basis of satisfactory progress, development of an approved application, and the availability of funds.

Eligibility Information

Assistance will be provided only to the Meharry Medical College.

Under this cooperative agreement, OMH will:

1. Serve as the HHS lead in collaboration with partner agencies to provide financial assistance and programmatic guidance to MMC;
2. Meet with MMC representatives to discuss and approve work plans, including objectives, data integrity and confidentiality, evaluation techniques and budget items;
3. Provide technical assistance relative to project design and implementation, monitor progress of project activities, and evaluate progress and reports; and
4. Review and approve the implementation and dissemination of relevant project findings, final reports and project products prior to dissemination to public and private parties.

MMC will:

1. Continue to develop racial and ethnic minority health care professionals that are well-educated about health disparities, prepared to address diseases that adversely impact minority populations, and committed to practicing and delivering community-oriented health care services in medically underserved areas;
2. Work toward increasing the number of residents of other area health professions institutions into the in-patient and ambulatory care services of Nashville General Hospital at the Meharry campus for the purpose of providing those residents experience in working with and increasing available services to minority and disadvantaged populations;
3. Continue its collaborative relationship with Vanderbilt University Medical Center (the Meharry-Vanderbilt Alliance) to further expand collaborative research and research training initiatives at MMC (particularly addressing health disparities) through collaborative research projects, increase the number of shared clerkships, and expand primary care experiences for students from both institutions through the joint residency program;
4. Implement an Office of Educational Development and Support designed to support students identified as being at-risk by providing workshops to improve test-taking and time/stress management skills, application and interview skills workshops, primary care exposure and United States Medical Licensure Examination review;
5. Establish a program to track students' progress and ultimate process of the program in improving the number of physicians practicing in minority and medically underserved areas;
6. Expand the MMC Clinical Skills Assessment Center and provide enhanced training in cultural competency so that students will demonstrate improvement in their cultural awareness, attitude, knowledge and skills;
7. Expand health disparity research and research training activities through the development and implementation of a library modernization plan that will expand library resources to community-

[1] Joint Center for Political and Economic Studies, *Focus Magazine, Can Black Doctors Survive?*, October 1997, retrieved November 30, 2005 from the Joint Center for Political and Economic Studies Web Site: *http://www.jointcenter.org/publications1/focus/focusPDFs/1997/oct97.pdf.*

[2] Ibid.

[3] *Missing Persons: Minorities in the Health Professions,* A Report of the Sullivan Commission on Diversity in the Health Care Workforce, retrieved February 10, 2006 from the Sullivan Commission Web site: *http://admissions.duhs.duke.edu/sullivancommission/index.cfm.*

[4] Ibid.

based providers, enhance biomedical informatics services, and increase behavioral and population-based research resources; and

8. Provide a report of the initial practice locations of MMC medical and dental graduates for each of the past 10 years and the number of students completing their education during the project period that were assisted by this program.

Dated: October 2, 2007.

Mirtha R. Beadle,

Deputy Director, Office of Minority Health.

[FR Doc. E7–19737 Filed 10–5–07; 8:45 am]

BILLING CODE 4150–29–P

DEPARTMENT OF HEALTH AND HUMAN SERVICES

Announcement of Anticipated Availability of Funds for Family Planning Services Grants

AGENCY: Department of Health and Human Services, Office of the Secretary, Office of Public Health and Science, Office of Population Affairs.

ACTION: Notice; correction.

SUMMARY: The Office of Population Affairs, OPHS, HHS published a notice in the **Federal Register** of Monday, June 11, 2007 announcing the anticipated availability of funds for family planning services grants. On July 13, 2007, the Notice was corrected to reflect the availability of Arizona, Navajo Nation for competition. Since that time, an additional State/population/area to be served has become available for competition. This Notice reflects the availability of Illinois, Chicago area for competition.

FOR FURTHER INFORMATION CONTACT: Susan B. Moskosky, 240–453–2888.

Correction

In the **Federal Register** of June 11, 2007, FR Doc. 07–11183, on page 32113, correct Table I to read:

TABLE I

States/populations/areas to be served	Approximate funding available	Application due date	Approx. grant funding date
Region I: No service areas competitive in FY 2008.			
Region II:			
New York, New York City area	$4,209,000	03/01/08	07/01/08
New Jersey	8,586,000	09/01/07	01/01/08
Region III:			
Maryland	3,957,000	12/01/07	04/01/08
Southeast Pennsylvania	4,889,000	03/01/08	07/01/08
West Virginia	2,169,000	12/01/07	04/01/08
Region IV:			
Kentucky	5,442,500	03/01/08	07/01/08
South Carolina	5,767,000	03/01/08	07/01/08
Florida, Greater Miami area	544,000	06/01/08	09/30/08
Region V:			
Illinois, Chicago area	205,000	06/01/08	09/30/08
Ohio, Central area	709,500	11/01/07	03/01/08
Minnesota	2,632,500	09/01/07	01/01/08
Region VI:			
Arkansas	3,341,000	11/01/07	03/01/08
Louisiana	4,370,000	03/01/08	07/01/08
New Mexico	2,835,000	09/01/07	01/01/08
Region VII:			
Iowa	2,531,500	03/01/08	07/01/08
Iowa	1,061,500	06/01/08	09/30/08
Region VIII:			
Montana	1,970,000	03/01/08	07/01/08
Region IX:			
Arizona	4,080,500	09/01/07	01/01/08
Arizona, Navajo Nation	658,900	03/01/08	07/01/08
California	20,451,500	09/01/07	01/01/08
California, Los Angeles area	472,000	09/01/07	01/01/08
Republic of the Marshall Islands	190,500	03/01/08	07/01/08
Region X:			
Alaska	873,000	03/01/08	07/01/08

In addition, on page 32111, in the first column, under II. AWARD INFORMATION, please correct the second sentence to read, ''Of this amount, OPA intends to make available approximately $81.9 million for competing Title X family planning services grant awards in 23 states, populations, and/or areas.''

Dated: October 2, 2007.

Evelyn M. Kappeler,

Acting Director, Office of Population Affairs.

[FR Doc. E7–19738 Filed 10–5–07; 8:45 am]

BILLING CODE 4150–34–P

DEPARTMENT OF HEALTH AND HUMAN SERVICES

Office of the Secretary

Findings of Scientific Misconduct

AGENCY: Office of the Secretary, HHS.

ACTION: Notice.

SUMMARY: Notice is hereby given that the Office of Research Integrity (ORI) and the Assistant Secretary for Health

have taken final action in the following case:

Jon Sudbø, D.D.S., Norwegian Radium Hospital: Based on the findings of an investigation conducted by the Investigation Commission appointed by Norwegian Radium Hospital (NRH) and the University of Oslo, the respondent's own admission, and additional analysis and information obtained by the Office of Research Integrity (ORI) during its oversight review, the U.S. Public Health Service (PHS) found that Jon Sudbø, D.D.S., former doctoral student and faculty member, University of Oslo, and former physician in the Department of Medical Oncology and Radiotherapy, NRH, engaged in scientific misconduct by reporting fabricated and/or falsified research in grant application 1 P01 CA106451–01 submitted to the National Cancer Institute (NCI), National Institutes of Health (NIH), and its first-year progress report.

Specifically, PHS found that Dr. Sudbø engaged in scientific misconduct by falsifying and fabricating research that served as the rationale for Project 1, ''Oral Cancer Prevention with Molecular Targeting Therapy,'' with Dr. Jon Sudbø, as project leader, in the grant application, and by falsifying a progress report for the awarded grant. In particular, in Figure 1 of the Background and Significance section of the grant application, Dr. Sudbø reported fabricated/falsified results for the effects of lesion ploidy upon survival in patients with oral pre-malignant lesions. In the Preliminary Data section of the grant application, Dr. Sudbø reported several events intended to demonstrate his experience in the research field that the Investigation Commission stated ''appear as pure fiction.'' Also, in the first yearly progress report for the funded grant, Dr. Sudbø falsified the number of patients that had been screened for admission to the study.

In addition to three publications for which Dr. Sudbø admitted falsifying and/or fabricating data, the Investigation Commission found at least twelve other publications that warranted retraction because they could not be considered valid. The research reported in these publications was not supported by PHS funds. However, the publications address the same general research area as that addressed in the grant application and demonstrate a pervasive pattern of falsification/fabrication in research reporting on the part of Dr. Sudbø. The falsified/fabricated data presented in the grant application purport to demonstrate the feasibility of preventing cancer in a high risk population with nontoxic oral agents.

Dr. Sudbø has entered into a Voluntary Exclusion Agreement (Agreement) in which he has voluntarily agreed, beginning on August 31, 2007:

(1) To exclude himself permanently from any contracting or subcontracting with any agency of the United States Government and from eligibility or involvement in nonprocurement programs of the United States Government as delineated in the OMB Guidelines to Agencies on Governmentwide Debarment and Suspension at 2 CFR Part 376, *et seq.*; Dr. Sudbø agrees that he will not petition HHS to reverse or reduce the scope of the permanent voluntary exclusion or other administrative actions that are the subject of this Agreement; and

(2) To exclude himself permanently from serving in any advisory capacity to PHS, including but not limited to service on any PHS advisory committee, board, and/or peer review committee, or as a consultant or contractor to PHS.

FOR FURTHER INFORMATION CONTACT: Director, Division of Investigative Oversight, Office of Research Integrity, 1101 Wootton Parkway, Suite 750, Rockville, MD 20852, (240) 453–8800.

John E. Dahlberg,

Acting Director, Office of Research Integrity.

[FR Doc. E7–19850 Filed 10–5–07; 8:45 am]

BILLING CODE 4150–31–P

DEPARTMENT OF HEALTH AND HUMAN SERVICES

Centers for Disease Control and Prevention

[30Day–08–07AM]

Agency Forms Undergoing Paperwork Reduction Act Review

The Centers for Disease Control and Prevention (CDC) publishes a list of information collection requests under review by the Office of Management and Budget (OMB) in compliance with the Paperwork Reduction Act (44 U.S.C. Chapter 35). To request a copy of these requests, call the CDC Reports Clearance Officer at (404) 639–5960 or send an e-mail to *omb@cdc.gov.* Send written comments to CDC Desk Officer, Office of Management and Budget, Washington, DC or by fax to (202) 395–6974. Written comments should be received within 30 days of this notice.

Proposed Project

Study to Examine Web-Based Administration of the Youth Risk Behavior Survey—New—National Center for Chronic Disease Prevention and Health Promotion (NCCDPHP), Centers for Disease Control and Prevention (CDC).

Background and Brief Description

The Youth Risk Behavior Survey (YRBS) has been conducted biennially since 1991 using paper-and-pencil questionnaires in schools. Because of technological improvements in survey research methods, CDC is considering changing to web-based administration of the YRBS. Because YRBS is the only national source of data for at least 10 national health objectives in Healthy People 2010, it is critical to understand (1) Whether it is feasible to change to web-based administration, and (2) how a change to web-based administration, both with and without the use of skip patterns in the questionnaire, might affect prevalence estimates of the priority health risk behaviors reported in the YRBS.

CDC is proposing an information collection to address these issues. The first data collection will be a questionnaire administered to approximately 600 U.S. high school principals to assess perceptions of the feasibility and acceptability of using web-based data collection methods for student surveys and assessments. The second data collection will be a questionnaire similar to the YRBS questionnaire administered to a convenience sample of 9th and 10th grade students attending schools in the United States. Respondents for the student data collection include students (n=6,000) who receive instructions for and complete the student questionnaire, school administrators (n=80) who provide information in the School Recruitment Script for the student questionnaire, and teachers (n=320) who complete the Data Collection Checklist for the student questionnaire. In the student data collection, students will be assigned randomly to one of four conditions: (1) Paper-and-pencil questionnaire in regular classroom, (2) web-based questionnaire in computer lab without programmed skip patterns, (3) web-based questionnaire in computer lab with programmed skip patterns, and (4) web-based questionnaire without programmed skip patterns completed at any computer of the student's choosing.

There are no costs to respondents except their time to participate in the survey and, in the case of school contacts and teachers, to assist in school recruitment. The estimated annualized burden hours are 4,813.

ESTIMATED ANNUALIZED BURDEN HOURS

Respondents	Form name	Number of respondents	Number of responses per respondent	Average burden per response (in hours)
Principals	Principal Survey of the Feasibility and Acceptability of Web-based Student Assessments and Surveys.	600	1	20/60
School Administrators	School Recruitment Script for the Student Health Survey	80	1	25/60
Teachers	Data Collection Checklist for the Student Health Survey	320	1	15/60
Students	Student Health Survey	6,000	1	45/60

Dated: October 2, 2007.

Maryam I. Daneshvar,

Acting Reports Clearance Officer, Centers for Disease Control and Prevention.

[FR Doc. E7–19800 Filed 10–5–07; 8:45 am]

BILLING CODE 4163–18–P

DEPARTMENT OF HEALTH AND HUMAN SERVICES

Substance Abuse and Mental Health Services Administration

Center for Substance Abuse Treatment; Notice of Meeting

Pursuant to Public Law 92–463, notice is hereby given of the meeting of the Center for Substance Abuse Treatment (CSAT) National Advisory Council on October 17, 2007.

The meeting is open and will include discussion of the Center's policy issues, and current administrative, legislative, and program developments.

Attendance by the public will be limited to space available. Public comments are welcome. Please communicate with the CSAT Council Executive Secretary, Ms. Cynthia Graham (see contact information below), to make arrangements to attend, comment or to request special accommodations for persons with disabilities.

Substantive program information, a summary of the meeting, and a roster of Council members may be obtained as soon as possible after the meeting, either by accessing the SAMHSA Committee Web site, *www.nac.samhsa.gov/CSAT/csatnac.aspx*, or by contacting Ms. Graham. The transcript of the meeting will also be available on the SAMHSA Committee Web site within three weeks after the meeting.

Committee Name: Substance Abuse and Mental Health Services Administration, CSAT National Advisory Council.

Date/Time/Type: October 17, 2007, from 8:30 a.m.–5 p.m.: Open.

Place: 1 Choke Cherry Road, Sugarloaf and Seneca Conference Rooms, Rockville, Maryland 20857.

Contact: Cynthia Graham, M.S., Executive Secretary, SAMHSA/CSAT National Advisory Council, 1 Choke Cherry Road, Room 5–1036, Rockville, MD 20857, *Telephone:* (240) 276–1692, *Fax:* (240) 276–1690, *E-mail: cynthia.graham@samhsa.hhs.gov.*

Toian Vaughn,

Committee Management Officer, Substance Abuse and Mental Health Services Administration.

[FR Doc. E7–19450 Filed 10–5–07; 8:45 am]

BILLING CODE 4162–20–P

DEPARTMENT OF HOMELAND SECURITY

Federal Emergency Management Agency

[FEMA–1729–DR]

Illinois; Major Disaster and Related Determinations

AGENCY: Federal Emergency Management Agency, DHS.

ACTION: Notice.

SUMMARY: This is a notice of the Presidential declaration of a major disaster for the State of Illinois (FEMA–1729–DR), dated September 25, 2007, and related determinations.

DATES: *Effective Dates:* September 25, 2007.

FOR FURTHER INFORMATION CONTACT: Peggy Miller, Disaster Assistance Directorate, Federal Emergency Management Agency, Washington, DC 20472, (202) 646–2705.

SUPPLEMENTARY INFORMATION: Notice is hereby given that, in a letter dated September 25, 2007, the President declared a major disaster under the authority of the Robert T. Stafford Disaster Relief and Emergency Assistance Act, 42 U.S.C. 5121–5206 (the Stafford Act), as follows:

I have determined that the damage in certain areas of the State of Illinois resulting from severe storms and flooding during the period of August 20–31, 2007, is of sufficient severity and magnitude to warrant a major disaster declaration under the Robert T. Stafford Disaster Relief and Emergency Assistance Act, 42 U.S.C. §§ 5121–5206 (the Stafford Act). Therefore, I declare that such a major disaster exists in the State of Illinois.

In order to provide Federal assistance, you are hereby authorized to allocate from funds available for these purposes such amounts as you find necessary for Federal disaster assistance and administrative expenses.

You are authorized to provide Individual Assistance and Public Assistance in the designated areas, and Hazard Mitigation throughout the State. Consistent with the requirement that Federal assistance be supplemental, any Federal funds provided under the Stafford Act for Hazard Mitigation and Other Needs Assistance will be limited to 75 percent of the total eligible costs. Federal funds provided under the Stafford Act for Public Assistance also will be limited to 75 percent of the total eligible costs, except for any particular projects that are eligible for a higher Federal cost-sharing percentage under the FEMA Public Assistance Pilot Program instituted pursuant to 6 U.S.C. 777.

Further, you are authorized to make changes to this declaration to the extent allowable under the Stafford Act.

The time period prescribed for the implementation of section 310(a), Priority to Certain Applications for Public Facility and Public Housing Assistance, 42 U.S.C. 5153, shall be for a period not to exceed six months after the date of this declaration.

The Federal Emergency Management Agency (FEMA) hereby gives notice that pursuant to the authority vested in the Administrator, under Executive Order 12148, as amended, Tony Russell, of FEMA is appointed to act as the Federal Coordinating Officer for this declared disaster.

The following areas of the State of Illinois have been designated as adversely affected by this declared major disaster:

DeKalb, Grundy, Kane, LaSalle, Lake, and Will Counties for Individual Assistance.

DeKalb, Kane, and LaSalle Counties for Public Assistance.

All counties within the State of Illinois are eligible to apply for assistance under the Hazard Mitigation Grant Program.

(The following Catalog of Federal Domestic Assistance Numbers (CFDA) are to be used

for reporting and drawing funds: 97.030, Community Disaster Loans; 97.031, Cora Brown Fund Program; 97.032, Crisis Counseling; 97.033, Disaster Legal Services Program; 97.034, Disaster Unemployment Assistance (DUA); 97.046, Fire Management Assistance; 97.048, Individuals and Households Housing; 97.049, Individuals and Households Disaster Housing Operations; 97.050 Individuals and Households Program—Other Needs; 97.036, Public Assistance Grants; 97.039, Hazard Mitigation Grant Program.)

R. David Paulison,

Administrator, Federal Emergency Management Agency.

[FR Doc. E7–19833 Filed 10–5–07; 8:45 am]

BILLING CODE 9110–10–P

DEPARTMENT OF HOMELAND SECURITY

Federal Emergency Management Agency

[FEMA–1717–DR]

Minnesota; Amendment No. 5 to Notice of a Major Disaster Declaration

AGENCY: Federal Emergency Management Agency, DHS.

ACTION: Notice.

SUMMARY: This notice amends the notice of a major disaster declaration for the State of Minnesota (FEMA–1717–DR), dated August 23, 2007, and related determinations.

DATES: *Effective Dates:* September 28, 2007.

FOR FURTHER INFORMATION CONTACT: Peggy Miller, Disaster Assistance Directorate, Federal Emergency Management Agency, Washington, DC 20472, (202) 646–2705.

SUPPLEMENTARY INFORMATION: The notice of a major disaster declaration for the State of Minnesota is hereby amended to include the following area among those areas determined to have been adversely affected by the catastrophe declared a major disaster by the President in his declaration of August 23, 2007.

Jackson County for Public Assistance.

(The following Catalog of Federal Domestic Assistance Numbers (CFDA) are to be used for reporting and drawing funds: 97.030, Community Disaster Loans; 97.031, Cora Brown Fund Program; 97.032, Crisis Counseling; 97.033, Disaster Legal Services Program; 97.034, Disaster Unemployment Assistance (DUA); 97.046, Fire Management Assistance; 97.048, Individuals and Households Housing; 97.049, Individuals and Households Disaster Housing Operations; 97.050 Individuals and Households Program—Other Needs; 97.036, Public Assistance Grants; 97.039, Hazard Mitigation Grant Program.)

R. David Paulison,

Administrator, Federal Emergency Management Agency.

[FR Doc. E7–19843 Filed 10–5–07; 8:45 am]

BILLING CODE 9110–10–P

DEPARTMENT OF HOMELAND SECURITY

Federal Emergency Management Agency

[FEMA–1712–DR]

Oklahoma; Amendment No. 8 to Notice of a Major Disaster Declaration

AGENCY: Federal Emergency Management Agency, DHS.

ACTION: Notice.

SUMMARY: This notice amends the notice of a major disaster declaration for the State of Oklahoma (FEMA–1712–DR), dated July 7, 2007, and related determinations.

DATES: *Effective Dates:* September 28, 2007.

FOR FURTHER INFORMATION CONTACT: Peggy Miller, Disaster Assistance Directorate, Federal Emergency Management Agency, Washington, DC 20472, (202) 646–2705.

SUPPLEMENTARY INFORMATION: The notice of a major disaster declaration for the State of Oklahoma is hereby amended to include the following areas among those areas determined to have been adversely affected by the catastrophe declared a major disaster by the President in his declaration of July 7, 2007.

Tillman County for Public Assistance. Logan, Pontotoc, and Seminole Counties for Public Assistance (already designated for Individual Assistance.)

Bryan, Comanche, Cotton, and Stephens Counties for Public Assistance (already designated for Individual Assistance and emergency protective measures [Category B], limited to direct Federal assistance under the Public Assistance program.)

(The following Catalog of Federal Domestic Assistance Numbers (CFDA) are to be used for reporting and drawing funds: 97.030, Community Disaster Loans; 97.031, Cora Brown Fund Program; 97.032, Crisis Counseling; 97.033, Disaster Legal Services Program; 97.034, Disaster Unemployment Assistance (DUA); 97.046, Fire Management Assistance; 97.048, Individuals and Households Housing; 97.049, Individuals and Households Disaster Housing Operations; 97.050, Individuals and Households Program—Other Needs; 97.036, Public Assistance Grants; 97.039, Hazard Mitigation Grant Program.)

R. David Paulison,

Administrator, Federal Emergency Management Agency.

[FR Doc. E7–19830 Filed 10–5–07; 8:45 am]

BILLING CODE 9110–10–P

DEPARTMENT OF HOMELAND SECURITY

Federal Emergency Management Agency

Notice of Adjustment of Countywide Per Capita Impact Indicator

AGENCY: Federal Emergency Management Agency, DHS.

ACTION: Notice.

SUMMARY: FEMA gives notice that the countywide per capita impact indicator under the Public Assistance program for disasters declared on or after October 1, 2007, will be increased.

DATES: *Effective Date:* October 1, 2007, and applies to major disasters declared on or after October 1, 2007.

FOR FURTHER INFORMATION CONTACT: James A. Walke, Disaster Assistance Directorate, Federal Emergency Management Agency, Washington, DC 20472, (202) 646–3834.

SUPPLEMENTARY INFORMATION: Response and Recovery Directorate Policy No. 9122.1 provides that FEMA will adjust the countywide per capita impact indicator under the Public Assistance program to reflect annual changes in the Consumer Price Index for All Urban Consumers published by the Department of Labor.

FEMA gives notice of an increase in the countywide per capita impact indicator to $3.11 for all disasters declared on or after October 1, 2007.

FEMA bases the adjustment on an increase in the Consumer Price Index for All Urban Consumers of 2.0 percent for the 12-month period ended in August 2007. The Bureau of Labor Statistics of the U.S. Department of Labor released the information on September 19, 2007.

(Catalog of Federal Domestic Assistance No. 97.036, Public Assistance Grants.)

R. David Paulison,

Administrator, Federal Emergency Management Agency.

[FR Doc. E7–19836 Filed 10–5–07; 8:45 am]

BILLING CODE 9110–10–P

DEPARTMENT OF HOMELAND SECURITY

Federal Emergency Management Agency

Notice of Adjustment of Disaster Grant Amounts

AGENCY: Federal Emergency Management Agency, DHS.

ACTION: Notice.

SUMMARY: FEMA gives notice of an increase of the maximum amount for Small Project Grants to State and local governments and private nonprofit facilities for disasters declared on or after October 1, 2007.

DATES: *Effective Date:* October 1, 2007, and applies to major disasters declared on or after October 1, 2007.

FOR FURTHER INFORMATION CONTACT: James A. Walke, Disaster Assistance Directorate, Federal Emergency Management Agency, Washington, DC 20472, (202) 646–3834.

SUPPLEMENTARY INFORMATION: The Robert T. Stafford Disaster Relief and Emergency Assistance Act (the Stafford Act), 42 U.S.C. 5121–5206, prescribes that FEMA must annually adjust the maximum grant amount made under section 422, Small Project Grants, Simplified Procedure, relating to the Public Assistance program, to reflect changes in the Consumer Price Index for All Urban Consumers published by the Department of Labor.

FEMA gives notice of an increase of the maximum amount of any Small Project Grant made to the State, local government, or to the owner or operator of an eligible private nonprofit facility, under section 422 of the Stafford Act, to $60,900 for all disasters declared on or after October 1, 2007.

FEMA bases the adjustment on an increase in the Consumer Price Index for All Urban Consumers of 2.0 percent for the 12-month period ended in August 2007. The Bureau of Labor Statistics of the U.S. Department of Labor released the information on September 19, 2007.

(Catalog of Federal Domestic Assistance No. 97.036, Public Assistance Grants)

R. David Paulison,

Administrator, Federal Emergency Management Agency.

[FR Doc. E7–19835 Filed 10–5–07; 8:45 am]

BILLING CODE 9110–10–P

DEPARTMENT OF HOMELAND SECURITY

Federal Emergency Management Agency

Notice of Adjustment of Statewide Per Capita Impact Indicator

AGENCY: Federal Emergency Management Agency, DHS.

ACTION: Notice.

SUMMARY: FEMA gives notice that the statewide per capita impact indicator under the Public Assistance program for disasters declared on or after October 1, 2007, will be increased.

DATES: *Effective Date:* October 1, 2007, and applies to major disasters declared on or after October 1, 2007.

FOR FURTHER INFORMATION CONTACT: James A. Walke, Disaster Assistance Directorate, Federal Emergency Management Agency, Washington, DC 20472, (202) 646–3834.

SUPPLEMENTARY INFORMATION: 44 CFR 206.48 provides that FEMA will adjust the statewide per capita impact indicator under the Public Assistance program to reflect changes in the Consumer Price Index for All Urban Consumers published by the Department of Labor.

FEMA gives notice that the statewide per capita impact indicator will be increased to $1.24 for all disasters declared on or after October 1, 2007.

FEMA bases the adjustment on an increase in the Consumer Price Index for All Urban Consumers of 2.0 percent for the 12-month period ended in August 2007. The Bureau of Labor Statistics of the U.S. Department of Labor released the information on September 19, 2007.

(Catalog of Federal Domestic Assistance No. 97.036, Public Assistance Grants)

R. David Paulison,

Administrator, Federal Emergency Management Agency.

[FR Doc. E7–19838 Filed 10–5–07; 8:45 am]

BILLING CODE 9110–10–P

DEPARTMENT OF HOMELAND SECURITY

Federal Emergency Management Agency

Notice of Maximum Amount of Assistance Under the Individuals and Households Program

AGENCY: Federal Emergency Management Agency, DHS.

ACTION: Notice.

SUMMARY: FEMA gives notice of the maximum amounts for assistance under the Individuals and Households Program for emergencies and major disasters declared on or after October 1, 2007.

DATES: *Effective Date:* October 1, 2007, and applies to emergencies and major disasters declared on or after October 1, 2007.

FOR FURTHER INFORMATION CONTACT: Berl D. Jones, Jr., Disaster Assistance Directorate, Federal Emergency Management Agency, Washington, DC 20472, (202) 646–4235.

SUPPLEMENTARY INFORMATION: Section 408 of the Robert T. Stafford Disaster Relief and Emergency Assistance Act (the Act), 42 U.S.C. 5174, prescribes that FEMA must annually adjust the maximum amounts for assistance provided under the Individuals and Households (IHP) Program. FEMA gives notice that the maximum amount of IHP financial assistance provided to an individual or household under section 408 of the Act with respect to any single emergency or major disaster is $28,800. The increase in award amount as stated above is for any single emergency or major disaster declared on or after October 1, 2007.

FEMA bases the adjustment on an increase in the Consumer Price Index for All Urban Consumers of 2.0 percent for the 12-month period ended in August 2007. The Bureau of Labor Statistics of the U.S. Department of Labor released the information on September 19, 2007.

(Catalog of Federal Domestic Assistance No. 97.048, Individuals and Households—Housing; 97.049, Individuals and Households—Disaster Housing Operations; 97.050, Individuals and Households—Other Needs)

R. David Paulison,

Administrator, Federal Emergency Management Agency.

[FR Doc. E7–19834 Filed 10–5–07; 8:45 am]

BILLING CODE 9110–10–P

DEPARTMENT OF HOMELAND SECURITY

Federal Emergency Management Agency

[FEMA Docket ID 2007–0007]

National Response Framework

AGENCY: Federal Emergency Management Agency, DHS.

ACTION: Notice of availability; request for comments.

SUMMARY: The Federal Emergency Management Agency (FEMA) is accepting comments on the draft supporting documents to the National Response Framework (NRF). Composed of the Emergency Support Functions Annexes, Support Annexes, and Incident Annexes, these supplemental documents provide additional guidance that may be used in implementing the NRF. Combined with the NRF, these documents incorporate lessons-learned from recent disasters, and articulate more clearly the roles of the States, tribal, and local jurisdictions and the private sector to guide a successful response to natural disasters or terrorist attacks.

DATES: Comments must be received by November 10, 2007.

ADDRESSES: The NRF and supporting documents are available online in the NRF Resource Center located at *http://www.fema.gov/NRF*, as well as in the docket for this notice at *www.regulations.gov*. You may also view hard copies at the Office of Chief Counsel, Federal Emergency Management Agency, Room 835, 500 C Street, SW., Washington, DC 20472. You may submit comments on the supporting documents, identified by Docket ID FEMA–2007–0007, by one of the following methods:

Federal eRulemaking Portal: *http://www.regulations.gov*. Follow the instructions for submitting comments.

E-mail: *FEMA-POLICY@dhs.gov*. Include Docket ID FEMA–2007–0007 in the subject line of the message.

Fax: 866–466–5370.

Mail/Hand Delivery/Courier: Regulation & Policy Team, Office of Chief Counsel, Federal Emergency Management Agency, Room 835, 500 C Street, SW., Washington, DC 20472.

Instructions: All Submissions received must include the agency name and docket ID. Regardless of the method used for submitting comments or material, all submissions will be posted, without change, to the Federal eRulemaking Portal at *http://www.regulations.gov*, and will include any personal information you provide. Therefore, submitting this information makes it public. You may wish to read the Privacy Act notice that is available on the Privacy and Use Notice link on the Administration Navigation Bar of *www.regulations.gov*.

FEMA has also provided a form, available in the docket at *www.regulations.gov* and in NRF Resource Center at *http://www.fema.gov/NRF* or *http://www.fema.gov/emergency/NRF*. Due to the large number of comments that are expected, FEMA asks that comments be submitted using this form.

Docket: For access to the docket to read background documents or comments received, go to the Federal eRulemaking Portal at *http://www.regulations.gov* and search for docket number FEMA–2007–0007. Submitted comments may also be inspected at FEMA, Office of Chief Counsel, Room 835, 500 C Street, SW., Washington, DC 20472.

FOR FURTHER INFORMATION CONTACT: Andrew Slaten, Acting National Response Framework Branch Chief, Federal Emergency Management Agency, 999 E Street, NW., Washington, DC 20463, 202–646–8152.

SUPPLEMENTARY INFORMATION: The National Response Framework (NRF) builds on the current National Response Plan and, using the comprehensive framework of the National Incident Management System (NIMS), serves as a guide to how the nation conducts all-hazards incident management. The annexes, consisting of the Emergency Support Functions Annexes, Support Annexes and Incident Annexes, add to the NRF to provide additional guidance to support Federal departments and agencies, States, tribes, local entities, the private sector, volunteer and other organizations in catastrophic incidents.

The Emergency Support Function Annexes provide the structure for coordinating Federal interagency support for a Federal response to an incident. They are mechanisms for grouping functions used to provide Federal support to States and Federal-to-Federal support, both for declared disasters and emergencies under the Stafford Act and for non-Stafford Act incidents.

The Support Annexes describe how Federal departments and agencies, States, tribes, local entities, the private sector, volunteer and other organizations coordinate and execute the common functional processes and administrative requirements necessary to ensure efficient and effective incident management. The actions described in the Support Annexes are not limited to particular types of events but are overarching in nature and applicable to nearly every type of incident, In addition, they may support several Emergency Support Functions. The Incident Annexes, on the other hand, outline the actions, roles and responsibilities associated with a response to a particular type of catastrophic incident.

The NRF and its supplemental materials are written especially for government executives, private-sector leaders and emergency management practitioners. At the same time, they inform emergency management practitioners, explaining the operating structures and tools used routinely by first responders and emergency managers at all levels of government.

The Department is providing the current draft of the NRF supplemental documents for public comment; these draft documents do not necessarily reflect the final policy of the Administration. The NRF support documents are available online in the NRF Resource Center located at *http://www.fema.gov/NRF*, and the docket for this notice at *www.regulations.gov*.

Authority: Homeland Security Act of 2002, as amended, 6 U.S.C. 101, *et seq.*, Homeland Security Presidential Directive–5, Management of Domestic Incidents.

Dated: September 30, 2007.

R. David Paulison,

Administrator, Federal Emergency Management Agency.

[FR Doc. E7–19849 Filed 10–5–07; 8:45 am]

BILLING CODE 9110–21–P

DEPARTMENT OF HOMELAND SECURITY

Transportation Security Administration

[Docket Nos. TSA–2006–24191; Coast Guard–2006–24196]

Transportation Worker Identification Credential (TWIC); Enrollment Date for Port of Wilmington, Wilmington, DE

AGENCY: Transportation Security Administration; United States Coast Guard; DHS.

ACTION: Notice.

SUMMARY: The Department of Homeland Security (DHS) through the Transportation Security Administration (TSA) issues this notice of the dates for the beginning of the initial enrollment for the Transportation Worker Identification Credential (TWIC) for the Port of Wilmington, in Wilmington, DE.

DATES: TWIC enrollment in Wilmington, DE will begin on October 16, 2007.

ADDRESSES: You may view published documents and comments concerning the TWIC Final Rule, identified by the docket numbers of this notice, using any one of the following methods.

- Searching the Federal Docket Management System (FDMS) Web page at *http://www.regulations.gov.*;
- Accessing the Government Printing Office's Web page at *http://www.gpoaccess.gov/fr/index.html*; or
- Visiting TSA's Security Regulations Web page at *http://www.tsa.gov* and

accessing the link for ''Research Center'' at the top of the page.

FOR FURTHER INFORMATION CONTACT: James Orgill, TSA–19, Transportation Security Administration, 601 South 12th Street, Arlington, VA 22202–4220. Transportation Threat Assessment and Credentialing (TTAC), TWIC Program, (571) 227–3245 e-mail: *james.orgill@dhs.gov.*

Background

The Department of Homeland Security (DHS), through the United States Coast Guard and the Transportation Security Administration (TSA), issued a joint final rule (72 FR 3492; January 25, 2007) pursuant to the Maritime Transportation Security Act (MTSA), Pub. L. 107–295, 116 Stat. 2064 (November 25, 2002), and the Security and Accountability for Every Port Act of 2006 (SAFE Port Act), Pub. L. 109–347 (October 13, 2006). This rule requires all credentialed merchant mariners and individuals with unescorted access to secure areas of a regulated facility or vessel to obtain a TWIC. In this final rule, on page 3510, TSA and Coast Guard stated that a phased enrollment approach based upon risk assessment and cost/benefit would be used to implement the program nationwide, and that TSA would publish a notice in the **Federal Register** indicating when enrollment at a specific location will begin and when it is expected to terminate.

This notice provides the start date for TWIC initial enrollment at the Port of Wilmington, DE only. Enrollment in this port will begin on October 16, 2007. The Coast Guard will publish a separate notice in the **Federal Register** indicating when facilities within the Captain of the Port Zone Delaware Bay, including those in the Port of Wilmington, DE, must comply with the portions of the final rule requiring TWIC to be used as an access control measure. That notice will be published at least 90 days before compliance is required.

To obtain information on the pre-enrollment and enrollment process, and enrollment locations, visit TSA's TWIC Web site at *http://www.tsa.gov/twic.*

Issued in Arlington, Virginia, on October 4, 2007.

Kip Hawley,

Assistant Secretary, Transportation Security Administration.

[FR Doc. 07–4994 Filed 10–4–07; 2:14 pm]

BILLING CODE 9110–05–P

DEPARTMENT OF THE INTERIOR

Fish and Wildlife Service

Koyukuk, Nowitna and the Northern Unit (Kaiyuh Flats) of Innoko National Wildlife Refuges, AK

AGENCY: U.S. Fish and Wildlife Service, Interior.

ACTION: Notice of intent to revise the comprehensive conservation plan and prepare an environmental assessment; request for comments.

SUMMARY: We, the U.S. Fish and Wildlife Service (Service), intend to prepare a revised comprehensive conservation plan (CCP) and environmental assessment (EA) for Koyukuk, Nowitna and the Northern Unit (Kaiyuh Flats) of Innoko National Wildlife Refuges (Refuges). We furnish this notice in compliance with our CCP policy to advise other agencies, Tribes, and the public of our intentions, and to obtain suggestions and information on the scope of issues to consider in the planning process. We will use local announcements, special mailings, newspaper articles, the internet, and other media announcements to inform people of opportunities to provide input throughout the planning process. We will hold public meetings in communities near the refuges during preparation of the revised plan.

DATES: Please provide written comments on the scope of the CCP revision by December 15, 2007.

ADDRESSES: Address comments, questions, and requests for further information to: Robert Lambrecht, Planning Team Leader, Koyukuk Nowitna National Wildlife Refuge, P.O. Box 287, Galena, AK 99741–0287. Comments may be faxed to (907) 656–1708, or sent via electronic mail to *Koyukuk/Nowitna_planning@fws.gov*. Additional information about the Refuge is available on the internet at: *http://alaska.fws.gov/nwr/planning/knpol.htm.*

FOR FURTHER INFORMATION CONTACT: Robert Lambrecht, Planning Team Leader, phone (907) 656–1231.

SUPPLEMENTARY INFORMATION:

Introduction

With this notice, we initiate our process for developing a CCP for the Koyukuk and Nowitna and the Northern Unit (Kaiyuh Flats) of Innoko National Wildlife Refuges, Alaska. We furnish this notice in compliance with our policy to (1) advise other Federal and State agencies, Tribes, and the public of our intention to conduct detailed planning on this refuge and (2) obtain suggestions and information on the scope of issues to be considered in the environmental document and during the development of the CCP.

The CCP Process

The Alaska National Interest Lands Conservation Act (94 Stat. 2371) and the National Wildlife Refuge System Improvement Act of 1997 (16 U.S.C. 668dd–668ee), which amended the National Wildlife Refuge System Administration Act of 1966; require us to develop a CCP for each national wildlife refuge in Alaska. The purpose of developing a CCP is to provide refuge managers with a 15-year plan for achieving refuge purposes and contributing to the mission of the National Wildlife Refuge System, consistent with sound principles of fish and wildlife management, conservation, legal mandates, and our policies. In addition to outlining broad management direction on conserving wildlife and their habitats, CCPs identify wildlife-dependent recreational opportunities available to the public, including opportunities for hunting, fishing, wildlife observation and photography, and environmental education and interpretation. We will review and update the CCP at least every 15 years in accordance with the Refuge Improvement Act and the National Environmental Policy Act (NEPA) (42 U.S.C. 4321 *et seq.*).

Each unit of the National Wildlife Refuge System was established for specific purposes. We use these purposes as the bases to develop and prioritize management goals and objectives within the National Wildlife Refuge System mission, and to guide which public uses will occur on these Refuges. The planning process is a way for us and the public to evaluate management goals and objectives for the best possible conservation approach to this important wildlife habitat, while providing for wildlife-dependent recreation opportunities that are compatible with the Refuges' establishing purposes and the mission of the National Wildlife Refuge System.

We will conduct a comprehensive conservation planning process that will provide opportunity for Tribal, State, and local government agencies; organizations; and the public to participate in issue scoping and public comment. We request input in the form of issues, concerns, ideas, and suggestions for the future management of the Koyukuk and Nowitna and the Northern Unit (Kaiyuh Flats) of Innoko National Wildlife Refuges.

We will conduct the environmental review of this project through an

environmental assessment in accordance with the requirements of the National Environmental Policy Act of 1969, as amended; NEPA regulations (40 CFR parts 1500–1508); other appropriate Federal laws and regulations; and our policies and procedures for compliance with those laws and regulations.

The Refuges

The Koyukuk Refuge (3,550,000 acres), Nowitna Refuge (1,560,000 acres), and Northern Unit (Kaiyuh Flats) of Innoko Refuge (350,800 acres) are managed from the headquarters office in Galena, Alaska. Following are the purposes for which the Koyukuk and Nowitna National Wildlife Refuges were established by ANILCA: (i) To conserve fish and wildlife populations and habitats in their natural diversity, including but not limited to [Koyukuk] waterfowl and other migratory birds, moose, caribou (including participation in coordinated ecological studies and management of the Western Arctic caribou herd), furbearers, and salmon; [Nowitna] trumpeter swans, white-fronted geese, canvasbacks, and other waterfowl and migratory birds; moose; caribou; martens, wolverines, and other furbearers; salmon; sheefish; and northern pike; [Innoko] waterfowl, peregrine falcons, other migratory birds, black bear, moose, furbearers, and other mammals; and salmon; (ii) to fulfill the international treaty obligations of the United States with respect to fish and wildlife and their habitats; (iii) to provide, in a manner consistent with the purposes set forth in subparagraphs (i) and (ii), the opportunity for continued subsistence uses by local residents; (iv) to ensure, to the maximum extent practicable and in a manner consistent with the purposes set forth in paragraph (i), water quality and necessary water quantity within the refuge.

The CCPs for these refuges were completed in 1987. They provide direction for managing the refuges by identifying the types and level of activities that can occur on the refuges. The refuges are divided into three management categories: Most of the refuges are in the Minimal management category; 400,000 acres of the Koyukuk Refuge are designated Wilderness; and 142,000 acres of the Nowitna Refuge are in the Wild and Scenic River category. As we revise the CCPs, the two current CCPs will be combined into one CCP.

Koyukuk Refuge lies in a basin surrounded by rolling, low mountains and is bisected by the Koyukuk River, the third largest river in Alaska. The refuge's rich wetlands combine with lowland forests to support a diversity of wildlife, including moose and large populations of migrating waterfowl. There are about 15,000 lakes and over 5,500 miles of rivers and streams within the boundaries of the refuge. Refuge lands support large numbers of nesting waterfowl and contain some of Alaska's highest quality moose habitat. The refuge is also home to caribou, wolves, lynx, pike, raptors, and black and grizzly bears. The six Native (Koyukon Athabascan) villages adjacent to, or within, the refuge boundaries have used the refuge for centuries. Hunting, fishing and trapping are still important subsistence activities today.

The northern unit (Kaiyuh Flats) of Innoko Refuge shares a common boundary with Koyukuk Refuge and is home to waterfowl, peregrine falcons, other migratory birds, black bear, moose, fur bearers and other mammals, and salmon. Pike, a long-lived fish that can reach large sizes, also winter in the Kaiyuh Flats.

Nowitna Refuge's topography varies from flat lowlands dotted with wetlands to rolling hills capped by alpine tundra. During summer, Nowitna's varied habitats support over 125 bird species but this number drops to only a few dozen during winter. The Palisades, a series of bluffs on the Yukon River near the northeast boundary of the refuge, is a rich source of fossils and other evidence of Pleistocene Era animals and plants. The Nowitna River bisects the refuge and forms a broad meandering flood plain. Two-hundred twenty-three miles of the Nowitna is designated Wild and Scenic River and passes through a 15 mile canyon with peaks up to 2,100 feet. In the spring, high water and ice dams can back the river up more than 100 miles, affecting water levels and permitting the migration of fish from many adjacent lakes and sloughs.

Scoping: Preliminary Issues, Concerns, and Opportunities

We have identified preliminary issues, concerns, and opportunities and may address them in the CCP. Preliminary issues include (1) concern about management of moose, salmon, predators, and waterfowl within the refuges; (2) competition for refuge resources between local and non-local users; (3) desire for improved pubic outreach and involvement in refuge management; (4) sensitivity to local cultural ways; (5) future trends in public use of the refuge and how public use will be managed; (6) effects of climate change on the refuge; (7) implementation of existing policies on cabins, timber harvest, and other resource development; and (8) effects of existing and proposed off-refuge development on refuge lands and resources. These and other issues will be explored during the scoping process and the refuge will determine which issues will be addressed in the revised CCP.

Public Meetings

We will involve the public through open houses, meetings, and comments. We will mail planning updates to our refuge mailing list to keep the public aware of the status of the revision and how we use public comments in each stage of the planning process. Scoping meetings are planned to be held in October, 2007 in the following refuge area communities: Hughes, Huslia, Kaltag, Koyukuk, Nulato, Ruby, and Tanana. A week-long open house will be held at refuge headquarters in Galena also in October. Details will be announced locally.

Public Availability of Comments

Before including your name, address, phone number, e-mail address, or other personal identifying information in your comment, you should be aware that your entire comment—including your personal identifying information—may be made publicly available at any time. While you can ask us in your comment to withhold your personal identifying information from public review, we cannot guarantee that we will be able to do so.

Dated: October 1, 2007.

Thomas O. Melius,

Regional Director, U.S. Fish & Wildlife Service, Anchorage, Alaska.

[FR Doc. E7–19794 Filed 10–5–07; 8:45 am]

BILLING CODE 4310–55–P

DEPARTMENT OF THE INTERIOR

Fish and Wildlife Service

Mississippi Sandhill Crane National Wildlife Refuge

AGENCY: Fish and Wildlife Service, Interior.

ACTION: Notice of Availability of the Final Comprehensive Conservation Plan (CCP) and Finding of No Significant Impact (FONSI).

SUMMARY: We, the Fish and Wildlife Service, announce our decision and the availability of the Final CCP and FONSI for Mississippi Sandhill Crane Refuge in Jackson County, Mississippi. The CCP was prepared pursuant to the National Wildlife Refuge System Improvement Act of 1997, and in accordance with the National Environmental Policy Act of 1969, and describes how the refuge will be managed for the next 15 years.

ADDRESSES: A copy of the CCP/FONSI may be obtained by writing to: Lloyd Culp, Refuge Manager, Mississippi Sandhill Crane National Wildlife Refuge, 7200 Crane Lane, Gautier, MS 39553; Telephone: 228/497–6322; Fax 228/497–5407. The CCP/FONSI may also be accessed and downloaded from the Service's Internet Web site: *http://southeast.fws.gov/planning.*

SUPPLEMENTARY INFORMATION: With this notice, we finalize the CCP process for Mississippi Sandhill Crane National Wildlife Refuge, begun as announced in the **Federal Register** (70 FR 30478; May 26, 2005). For more about the process, see that notice. We released the Draft CCP and Environmental Assessment (EA) to the public, requesting comments in a notice of availability in the **Federal Register** (71 FR 67627; November 22, 2006).

Mississippi Sandhill Crane National Wildlife Refuge was established in 1975 to safeguard the critically endangered Mississippi sandhill crane and its unique disappearing habitat.

With this notice, we announce our decision and the availability of the Final CCP/FONSI in accordance with the National Environmental Policy Act [40 CFR § 1506.6(b)] requirements. We completed a thorough analysis of the environmental, social, and economic considerations, which we included in the Final CCP/FONSI. The FONSI documents the selection of Alternative D, the preferred alternative.

The Draft CCP/EA identified and evaluated four alternatives for managing the refuge over the next 15 years. Under Alternative A, the no-action alternative, present management would have continued. Current approaches to managing and protecting cranes, other wildlife and habitats, and allowing for public use would have remain unchanged. Under Alternative B, the refuge would have emphasized its biological program by applying maximum efforts to enhance habitat conditions and increase wildlife populations, particularly the endangered crane. The visitor services program would have remained as it is at present. Under Alternative C, management would have focused on maximizing opportunities for public visitation, increasing both facilities and activities.

We chose Alternative D as the preferred alternative. This determination was made based on the best professional judgment of the planning team and the comments received on the Draft CCP/EA. Under this alternative, the refuge will strive to optimize both its biological program and its visitor services program. With regard to the Mississippi sandhill crane, the refuge's objective will be to provide for a self-sustaining crane population of 130 to 170 individuals, including 30–35 nesting pairs, fledging 10–15 young annually for at least 10 years.

Over the 15-year life of the plan, the staff will increase emphasis on environmental education and interpretation to lead to a better understanding of the importance of wildlife and habitat resources, especially sandhill cranes, savanna, fire ecology, invasive species, endangered species, and migratory birds. Research studies on the refuge will be fostered and partnerships developed with universities and other agencies, providing needed resources and experiment sites, while meeting the needs of the refuge's wildlife and habitat management programs. Research will also benefit conservation efforts throughout coastal Mississippi to conserve, enhance, restore, and manage native habitat. New surveys on birds, reptiles, and amphibians will be initiated to develop baseline information.

Authority: This notice is published under the authority of the National Wildlife Refuge System Improvement Act of 1997, Public Law 105–57.

Editorial Note: This document was received at the Office of the Federal Register on October 3, 2007.

Dated: April 26, 2007.

Cynthia K. Dohner,

Acting Regional Director.

[FR Doc. E7–19798 Filed 10–5–07; 8:45 am]

BILLING CODE 4310–55–P

DEPARTMENT OF THE INTERIOR

Fish and Wildlife Service

Proposed Florida Scrub-Jay Safe Harbor Agreement, Volusia County, FL

AGENCY: Fish and Wildlife Service, Interior.

ACTION: *Notice:* receipt of application for an enhancement of survival permit; safe harbor agreement.

SUMMARY: We, the Fish and Wildlife Service (Service), announce the availability of an Enhancement of Survival Permit (ESP) application and Safe Harbor Agreement (SHA). Daytona Beach Community College (Applicant) requests an ESP permit under section 10(a)(1)(A) of the Endangered Species Act of 1973, as amended (Act). The permit application includes a proposed Safe Harbor Agreement (Agreement) for the threatened Florida scrub-jay (*Aphelocoma coerulescens*) (scrub-jay) for a period of 20 years.

We (the Service) announce the opening of a 30-day comment period and request comments from the public on the Applicant's enhancement of survival permit application and the accompanying proposed Agreement. All comments we receive, including names and addresses, will become part of the administrative record and may be released to the public. For further information and instructions on reviewing and commenting on this application, see the **ADDRESSES** section, below.

DATES: We must receive any written comments on the ESP application and SHA on or before November 8, 2007.

ADDRESSES: If you wish to review the ESP application and SHA, you may write the Field Supervisor at our Jacksonville Field Office, 6620 Southpoint Drive South, Suite 310, Jacksonville, FL 32216, or make an appointment to visit during normal business hours. If you wish to comment, you may mail or hand deliver comments to the Jacksonville Field Office, or you may e-mail comments to *michael_jennings@fws.gov*. For more information on reviewing documents and public comments and submitting comments, see **SUPPLEMENTARY INFORMATION.**

FOR FURTHER INFORMATION CONTACT: Michael Jennings, Fish and Wildlife Biologist, Jacksonville Field Office (see **ADDRESSES**), telephone: 904/232–2580, ext. 113.

SUPPLEMENTARY INFORMATION: Public Review and Comment: Please reference permit number TE146919–0 in all requests or comments. Please include your name and return address in your e-mail message. If you do not receive a confirmation from us that we have received your e-mail message, contact us directly at the telephone number listed under **FOR FURTHER INFORMATION CONTACT.** Before including your address, phone number, e-mail address, or other personal identifying information in your comment, you should be aware that your entire comment—including your personal identifying information—may be made publicly available at any time. While you can ask us in your comment to withhold your personal identifying information from public review, we cannot guarantee that we will be able to do so. We will make all submissions from organizations or businesses, and from individuals identifying themselves as representatives or officials of organizations or businesses, available for public inspection in their entirety.

We will not consider anonymous comments.

Background: Under a safe harbor agreement, a participating property owner voluntarily undertakes management activities on their property to enhance, restore, or maintain habitat benefiting species listed under the Act. Safe harbor agreements encourage private and other non-Federal property owners to implement conservation measures for listed species by assuring them they will not be subjected to increased property use restrictions if their efforts attract listed species to their property or increase the numbers of listed species already on their property. Application requirements and issuance criteria for enhancement of survival permits through safe harbor agreements are found in 50 CFR 17.22 and 17.32.

We have worked with the Applicant to design conservation measures intended to benefit the scrub-jay on about 76 acres (enrolled property) in Volusia County. Under the SHA, the Applicant will undertake the following actions on the enrolled property: (1) Remove sand pine canopy; (2) create open sandy areas through mechanical means (including chopping and/or root-raking) or by using herbicides; and (3) manage habitat using prescribed fire and/or mechanical means.

Applicant's Proposal: The Applicant's property is currently occupied by three families of scrub-jays. Conservation measures proposed by the Applicant will enhance existing habitat conditions and contribute to the continued survival of the three scrub-jay families currently residing on their property. In addition, the Applicant intends to manage unoccupied habitat in anticipation that it will become occupied by scrub-jays. The Applicant anticipates that the proposed conservation measures will result in an additional three families of scrub-jays occupying their property. Without the proposed SHA, it would not be possible for the Applicant to undertake the proposed conservation measures and receive regulatory assurances from the Service through the Act.

Consistent with the Service's Safe Harbor policy and implementing regulations, we propose to issue a permit to the Applicant authorizing the incidental take of scrub-jays through lawful activities on the enrolled land, as long as baseline conditions are maintained and terms of the Agreement are implemented. Future development of educational facilities on the enrolled property is likely to result in a return to the baseline condition.

This notice also advises the public that the Service has made a preliminary determination that issuance of the ESP will not result in significant impacts to the human environment. Therefore, the ESP and SHA is a ''low-effect'' project and qualifies for a categorical exclusion under the National Environmental Policy Act of 1969 (NEPA), as amended (NEPA), as provided by the Department of the Interior Manual (516 DM 2 Appendix 1 and 516 DM 6 Appendix 1). This preliminary information may be revised based on our review of public comments that we receive in response to this notice.

We will evaluate the ESP and SHA and comments submitted thereon to determine whether the requirements of Section 10(a) of the Act have been met. We will also evaluate whether issuance of the ESP complies with section 7 of the Act by conducting an intra-Service section 7 consultation. We will use the results of this consultation, in combination with the above findings, in the final analysis to determine whether or not to issue the ESP and execute the SHA.

Authority: We provide this notice under Section 10 of the Act and NEPA regulations (40 CFR 1506.6).

Dated: October 2, 2007.

David L. Hankla,

Field Supervisor, Jacksonville Field Office.

[FR Doc. E7–19797 Filed 10–5–07; 8:45 am]

BILLING CODE 4310–55–P

DEPARTMENT OF THE INTERIOR

Fish and Wildlife Service

Endangered and Threatened Wildlife and Plants: Draft Post-Delisting Monitoring Plan for the Virginia Northern Flying Squirrel (Glaucomys sabrinus fuscus)

AGENCY: Fish and Wildlife Service, Interior.

ACTION: Notice of Availability of Draft Post-delisting Monitoring Plan; Request for Comments.

SUMMARY: We, the U.S. Fish and Wildlife Service (Service), announce the availability of the draft post-delisting monitoring plan (draft PDM Plan) for the Virginia northern flying squirrel (*Glaucomys sabrinus fuscus*), currently referred to as the West Virginia northern flying squirrel (WVNFS). The Endangered Species Act (ESA) requires that the Service implement a system, in cooperation with the States, to monitor effectively, for at least 5 years, the status of all species that have been recovered and no longer need protection of the ESA. The WVNFS has been proposed to be removed from the Federal List of Threatened and Endangered Wildlife and Plants (delisted) due to recovery.

DATES: Comments from all interested parties on the WVNFS draft PDM Plan must be received on or before November 8, 2007.

ADDRESSES: The draft PDM Plan may be downloaded from our Web site at *http://www.fws.gov/northeast/endangered/.* To request a copy of the draft PDM Plan, write to our West Virginia Field Office; U.S. Fish and Wildlife Service, 694 Beverly Pike, Elkins, West Virginia 26241; or call 304–636–6586 to receive a copy. You may also send an electronic mail request to *laura_hill@fws.gov.* Specify whether you want to receive a hard copy by U.S. mail or an electronic copy by electronic mail.

Send your comments by any of the following methods. See ''Viewing Documents'' and ''Public Comments Solicited'' under **SUPPLEMENTARY INFORMATION** for important information.

- Mail: WVNFS Draft PDM Plan Comments, U.S. Fish and Wildlife Service, West Virginia Field Office, 694 Beverly Pike, Elkins, West Virginia 26241.
- Hand Delivery/Courier: Same address as above.
- Electronic mail: *laura_hill@fws.gov.* Include ''WVNFS Draft PDM Plan Comments'' in the subject line of the message.
- Facsimile: 304–636–7824. Include ''WVNFS Draft PDM Plan Comments'' in the subject line.
- Federal eRulemaking Portal: *http://www.regulations.gov.* Follow the instructions for submitting comments.

FOR FURTHER INFORMATION CONTACT: Direct all questions or requests for additional information about the draft PDM Plan to Laura Hill (see **ADDRESSES**). Individuals who are hearing impaired or speech impaired may call the Federal Relay Service at 1–800–877–8337 for TTY assistance, 24 hours a day 7 days a week.

SUPPLEMENTARY INFORMATION:

Background

We published the proposed rule to remove the WVNFS, due to recovery, from the Federal List of Threatened and endangered Wildlife on December 19, 2006 with a 120-day comment period that closed on April 23, 2007. Recovery actions have resulted in reduction in the threats, which has led to: (1) A significant increase in the number of known WVNFS capture sites: (2) multiple generation reproduction; (3) the proven resiliency of the squirrels; and (4) the vast improvement and continued expansion of suitable habitat.

We are currently reviewing the comments received on the proposed rule and preparing responses as appropriate.

Section 4(g)(1) of the ESA requires that we implement a system, in cooperation with the States, to effectively monitor, for not less than 5 years, the status of all species that have been recovered and delisted. Additionally, we are to make prompt use of the emergency listing authority under section 4(b)(7) of the ESA if the recovered species is presented with significant risk to its well being. In order to meet the ESA's monitoring requirement, and to facilitate the efficient collection of data, we have designed a plan to detect changes in the status of the WVNFS.

The WVNFS draft PDM Plan was developed in cooperation with the State resources agencies of West Virginia and Virginia and Virginia and the U.S. Forest Service. Our West Virginia Field Office (WVFO) will have the lead agency responsibility for this monitoring effort, and will coordinate all phases of implementation of the plan and ensure that monitoring requirements outlined within the plan are accomplished. The draft PDM Plan proposes to conduct monitoring annually for at least 10 years. The primary focus will be on WVNFS habitat and implementation of plans or agreements to protect and manage habitat. Distribution and persistency throughout its range will also be monitored.

Viewing Documents

The supporting documents for the draft PDM Plan is available for inspection, by appointment, during normal business hours at our WVFO (see **ADDRESSES**). The comments and materials we receive on the monitoring plan during the comment period will be available for public inspection by appointment during normal business hours at the WVFO, 304–636–6586. Please call to make arrangements to view documents.

Public Comments Solicited

We request comments on the WVNFS draft PDM Plan. All comments received by the date specified above will be considered during preparation of the final PDM Plan. We will take into consideration the relevant comments, suggestions, or objections that we receive by the comment due date indicated above in the DATES section. These comments, suggestions, or objections, and any additional information received, may lead us to adopt a final PDM Plan that differs from this draft PDM Plan. Comments merely stating support or opposition to the draft PDM Plan without providing supporting data are not as helpful.

Public Availability of Comments

Before including your address, phone number, electronic mail address, or other personal identifying information in your comment, you should be aware that your entire document—including your personal identifying information—may be publicly available at any time. While you can ask us in your comments to withhold your personal identifying information from public review, we cannot guarantee that we will be able to do so.

Authority: The authority for this action is the Endangered Species Act of 1973 (16 U.S.C. 1531 *et seq.*).

Dated: September 14, 2007.

Thomas J. Healy,

Acting Regional Director, Region 5, U.S. Fish and Wildlife Service.

[FR Doc. 07–4940 Filed 10–5–07; 8:45 am]

BILLING CODE 4310–55–M

DEPARTMENT OF THE INTERIOR

Bureau of Land Management

Temporary Closure of Public Lands: Broadwater County, MT

AGENCY: Bureau of Land Management, Butte Field Office, Montana.

ACTION: Temporary closure of public land to motorized vehicles in Broadwater County.

SUMMARY: Notice is hereby given that certain roads and areas are temporarily closed to all motor vehicle operation.

The closed area is within the Iron Mask Acquisition and includes all preexisting, undeveloped roads situated in the County of Broadwater, State of Montana, described as follows:

Township 7 North, Range 1 East, Principal Meridian Montana

Section 4: S½.
Section 5: S½.
Section 7: NE¼ and N½ SE¼.
Section 8: W½, W½ E½ and E½ NE¼.
Section 9: NW¼, W½ NE¼, NE¼ NE¼ and W½ SE¼ NE¼.
Section 10: N½ NW¼ lying west of the Montana Rail Link Right of Way.
Section 17: W½ W½ NE¼ and NW¼ SE¼.
Section 18: SE¼ and SW¼ NE¼.
Section 19: Gov Lot 5.

All motor vehicle use will be prohibited during this temporary closure to protect public health and safety, prevent the spread of noxious weeds and to protect cultural and historic values until such time as a resource inventory is completed and public uses can be evaluated through either the resource management planning process or a recreation plan.

Closure signs will be posted and parking areas will be delineated and signed at main entry points to this area. Maps of the closure area and information may be obtained from the Butte Field Office and the Montana Fish, Wildlife and Parks Office.

DATES: This closure will take effect immediately and may be rescinded upon adoption of a resource management or recreation plan.

FOR FURTHER INFORMATION CONTACT: Rick Hotaling, Manager, Butte Field Office, 106 North Parkmont, Butte, MT 59701. (406) 533–7600.

Discussion of the Rules: Under the authority of 43 CFR 9268.3(d)(1)(I) and 43 CFR 8364.1(a), the Bureau of Land Management will enforce the following rule on public lands within the closed area.

You must not operate motor vehicles beyond signed parking areas.

Exemptions: Persons who are exempt from these rules include: Any Federal, State, or local officer or employee in the scope of their duties and any person authorized in writing by the Bureau of Land Management.

Penalties: The authority for this closure is found under section 303(a) of the Federal Land Policy and Management Act of 1976 (43 U.S.C. 1733(a)) and 43 CFR 8360.0–7. Any person who violates this closure may be tried before a United States Magistrate and fined no more than $1,000 or imprisoned for no more than 12 months, or both. Such violations may also be subject to the enhanced fines provided for by 18 U.S.C. 3571.

Dated: August 27, 2007.

Rick Hotaling,

Field Manager, Butte Field Office.

[FR Doc. E7–19702 Filed 10–5–07; 8:45 am]

BILLING CODE 4310–$$–P

DEPARTMENT OF THE INTERIOR

National Park Service

Delaware Water Gap National Recreation Area Citizen Advisory Commission Meeting

AGENCY: National Park Service; Interior.

ACTION: Notice of public meeting.

SUMMARY: This notice announces a public meeting of the Delaware Water Gap National Recreation Area Citizen Advisory Commission. Notice of this meeting is required under the Federal Advisory Committee Act, as amended (5

U.S.C. App. 2). ''An unusual combination of events in the preparation, approval, and transmission of this notice has resulted in the publication of this notice less than 15 days before the date of the meeting. The National Park Service has made extraordinary efforts to provide notification to all Commission members and to the public.''

DATES: Saturday, October 13, 2007, 9 a.m.

ADDRESSES: New Jersey District Office, Walpack, NJ 07881.

The agenda will include reports from Citizen Advisory Commission members including committees such as Cultural and Historical Resources, Natural Resources, and Recreation. Superintendent John J. Donahue will give a report on various park issues, including cultural resources, natural resources, construction projects, and partnership ventures. The agenda is set up to invite the public to bring issues of interest before the Commission.

FOR FURTHER INFORMATION CONTACT: Superintendent John J. Donahue, 570–426–2418.

SUPPLEMENTARY INFORMATION: The Delaware Water Gap National Recreation Area Citizen Advisory Commission was established by Public Law 100–573 to advise the Secretary of the Interior and the United States Congress on matters pertaining to the management and operation of the Delaware Water Gap National Recreation Area, as well as on other matters affecting the recreation area and its surrounding communities.

Dated: August 27, 2007.

John J. Donahue,

Superintendent.

[FR Doc. 07–4970 Filed 10–5–07; 8:45 am]

BILLING CODE 4312–J6–M

DEPARTMENT OF THE INTERIOR

National Park Service

National Register of Historic Places; Notification of Pending Nominations and Related Actions

Nominations for the following properties being considered for listing or related actions in the National Register were received by the National Park Service before September 22, 2007.

Pursuant to § 60.13 of 36 CFR part 60 written comments concerning the significance of these properties under the National Register criteria for evaluation may be forwarded by United States Postal Service, to the National Register of Historic Places, National Park Service, 1849 C St., NW., 2280, Washington, DC 20240; by all other carriers, National Register of Historic Places, National Park Service, 1201 Eye St., NW., 8th floor, Washington DC 20005; or by fax, 202–371–6447. Written or faxed comments should be submitted by October 24, 2007.

J. Paul Loether,

Chief, National Register of Historic Places, National Historic Landmarks Program.

COLORADO

Routt County

Mesa Schoolhouse, (Rural School Buildings in Colorado MPS), 33985 S. U.S. 40., Steamboat Springs, 07001113.

FLORIDA

Broward County

Thorpe, Alfred and Olive, Lustron House, 1001 NE. 2nd St., Fort Lauderdale, 07001114.

Lake County

Blandford, 28242 Lake Terry Dr., Mount Dora, 07001115.

IOWA

Fremont County

Tabor Antislavery Historic District, Park, Center, Orange & Elm Sts., Tabor, 07001117.

MARYLAND

Somerset County

Mt. Zion Memorial Church, 29071 Polks Rd., Princess Anne, 07001116.

Talbot County

Tidewater Inn, 101 E. Dover St., Easton, 07001118.

MISSOURI

Boone County

Wright Brothers Mule Barn, 1101–1107 Hinkson Ave. & 501–507 Fay St., Columbia, 07001119.

St. Louis Independent city, St. Luke's Plaza Apartments, 5602 through 5629 Enright Ave., St. Louis (Independent City), 07001120.

NEW YORK

Chemung County

Erste Deutsche Evangelische Kirche, 160 Madison Ave., Elmira, 07001121.

Trinity Church, 304 N. Main St., Elmira, 07001122.

Columbia County

Dorr, Dr. Joseph P., House, 2745 NY 23, Hillsdale, 07001123.

Onondaga County

Solvay Public Library, 615 Woods Rd., Solvay, 07001124.

Tefft—Steadman House, 18 North St., Marcellus, 07001125.

Orleans County

Millville Cemetery, E. Shelby Rd., Millville, 07001126.

Saratoga County

Wiggins—Collamer House, 450 E. High St., Malta, 07001127.

Washington County

McLean, Thomas, House, NY 29, Battenville, 07001128.

OREGON

Multnomah County

Failing Office Building, (Downtown Portland, Oregon MPS), 620 SW. 5th Ave., Portland, 07001129.

SOUTH CAROLINA

Greenwood County

Ware Shoals Inn, 1 Greenwood Ave. N., Ware Shoals, 07001130.

TEXAS

Harris County

Hill Street Bridge over Buffalo Bayou, (Historic Bridges of Texas MPS), S. Jensen Dr. at Buffalo Bayou, Houston, 07001131.

VIRGINIA

Botetourt County

Lauderdale, 13508 Lee Hwy., Buchanan, 07001132.

Carroll County

Point Pleasant School, Laurel Fork Rd., Laurel Fork, 07001133.

Charlottesville Independent City

Preston Court Apartments, 1600 Grady Ave., Charlottesville (Independent City), 07001134.

Clarke County

Greenway Historic District (Boundary Increase), 14374 Lord Fairfax Hwy., White Post, 07001135.

Cumberland County

Hamilton High School, 1925 Cartersville Rd., Cartersville, 07001136.

Emporia Independent City

Belfield—Emporia Historic District, Roughly bounded by the Petersburg & Danville RR, Atlantic Ave., Budd & Valley Sts., Emporia (Independent City), 07001137.

Fauquier County

Marshall's, John, Leeds Manor Rural Historic District, Centered along Leeds Manor Rd. from Leeds Church to Raven Ln., Markham, 07001138.

Grayson County

Fries Boarding Houses, 362 & 364 Grayson St., Fries, 07001139.

Lynchburg Independent City

Pyramid Motors, 405–407 Federal St., Lynchburg (Independent City), 07001140.

Petersburg Independent City

Cohen House, 32 S. Adams St., Petersburg (Independent City), 07001141.

Prince George County

Chester Plantation, 8401 Golf Course Dr., Disputanta, 07001142.

Rappahannock County

Scrabble School, (Rosenwald Schools in Virginia MPS), 111 Scrabble Rd., Castleton, 07001143.

Rockingham County

Peale, Jonathan, House, 67 Cross Keys Rd., Harrisonburg, 07001144.

Shenandoah County

Lantz Mill, 95 Swover Creek Rd., Edinburg, 07001145.

Wise County

Terrace Park Girl Scout Cabin, 211 Proctor St. N., Big Stone Gap, 07001146.

A request to MOVE has been made for the following resource:

NEW YORK

Suffolk County

Big Duck, The, NY 24, NW of jct. with Bellows Pond Rd., Town of Southampton, Flanders, 97000164.

A request for REMOVAL has been made for the following resources:

IOWA

Linn County

Mittvatsky House, 1035 2nd St. SE., Cedar Rapids, 75000695.

MINNESOTA

Blue Earth County

Mankato Holstein Farm Barn, (Blue Earth County MRA), Cty. Rd. 5, Lime Twp., Mankato, 80001951.

[FR Doc. 07–4961 Filed 10–5–07; 8:45 am]

BILLING CODE 4312–51–P

DEPARTMENT OF LABOR

Office of the Secretary

Submission for OMB Review: Comment Request

October 3, 2007.

The Department of Labor (DOL) hereby announces the submission of the following public information collection requests (ICR) to the Office of Management and Budget (OMB) for review and approval in accordance with the Paperwork Reduction Act of 1995 (Pub. L. 104–13, 44 U.S.C. chapter 35). A copy of each ICR, with applicable supporting documentation; including among other things a description of the likely respondents, proposed frequency of response, and estimated total burden may be obtained from the RegInfo.gov Web site at *http://www.reginfo.gov/public/do/PRAMain* or by contacting Darrin King on 202–693–4129 (this is not a toll-free number)/e-mail: *king.darrin@dol.gov*.

Interested parties are encouraged to send comments to the Office of Information and Regulatory Affairs, Attn: Katherine Astrich, OMB Desk Officer for the Employment and Training Administration (ETA), Office of Management and Budget, Room 10235, Washington, DC 20503, Telephone: 202–395–7316/Fax: 202–395–6974 (these are not toll-free numbers), E-mail: *OIRA_submission@omb.eop.gov* within 30 days from the date of this publication in the **Federal Register**. In order to ensure the appropriate consideration, comments should reference the OMB Control Number (see below).

The OMB is particularly interested in comments which:

- Evaluate whether the proposed collection of information is necessary for the proper performance of the functions of the agency, including whether the information will have practical utility;
- Evaluate the accuracy of the agency's estimate of the burden of the proposed collection of information, including the validity of the methodology and assumptions used;
- Enhance the quality, utility, and clarity of the information to be collected; and
- Minimize the burden of the collection of information on those who are to respond, including through the use of appropriate automated, electronic, mechanical, or other technological collection techniques or other forms of information technology, e.g., permitting electronic submission of responses.

Agency: Employment and Training Administration.

Type of Review: Extension without change of a currently approved collection.

Title: Benefit Appeals Report.

OMB Number: 1205–0172.

Form Number: ETA–5130.

Affected Public: State Governments.

Estimated Number of Respondents: 53.

Estimated Total Annual Burden Hours: 648.

Estimated Total Annual Costs Burden: $0.

Description: The ETA–5130, Benefit Appeals Report, contains information on the number of unemployment insurance appeals and the resultant decisions classified by program, appeals level, cases filed and disposed of (workflow), and decisions by level, appellant, and issue. The data on this report are used by the Department of Labor to monitor the benefit appeals process in the State Workforce Agencies and to develop any needed plans for remedial action. The data are also needed for workload forecasts and to determine administrative funding. If this information were not available, developing problems might not be discovered early enough to allow for timely solutions and avoidance of time consuming and costly corrective action.

Agency: Employment and Training Administration.

Type of Review: Extension without change of a currently approved collection.

Title: Attestations by Employers Using Alien Crewmembers for Longshore Activities in U.S. Ports.

OMB Number: 1205–0309.

Form Number: ETA–9033.

Affected Public: Private Sector: Business or other for-profit.

Estimated Number of Respondents: 1.

Estimated Total Annual Burden Hours: 4.

Estimated Total Annual Costs Burden: $0.

Description: The information collected on the Form ETA–9033 is required by section 258 of the Immigration and Nationality Act (INA) (8 U.S.C. 1288). The INA has a prevailing practice exception to the general prohibition on the performance of longshore work by alien crewmembers in U.S. ports. Under the prevailing practice exception, before any employer may use alien crewmembers to perform longshore activities in U.S. ports, it must submit an attestation to the Secretary of Labor containing the elements prescribed by the INA. The INA further requires that the Secretary of Labor make available for public examination in Washington, DC a list of employers that have filed attestations and, for each of these employers, a copy of the employer's attestation and accompanying documentation received by the Secretary.

Darrin A. King,

Acting Departmental Clearance Officer.

[FR Doc. E7–19805 Filed 10–5–07; 8:45 am]

BILLING CODE 4510–FP–P

DEPARTMENT OF LABOR

Employment and Training Administration

Request for Certification of Compliance—Rural Industrialization Loan and Grant Program

AGENCY: Employment and Training Administration, Labor.

ACTION: Notice.

SUMMARY: The Employment and Training Administration is issuing this notice to announce the receipt of a ''Certification of Non-Relocation and

Market and Capacity Information Report'' (Form 4279–2) for the following:

Applicant/Location: Burbank RE, LLC/Burbank, Ohio.

Principal Product/Purpose: The loan, guarantee, or grant application is to construct a new branch or facility that plans to offer skilled nursing and assisted living services. The NAICS industry codes for this enterprise are: 623110 Skilled nursing facilities; and 623311 Assisted-living facilities with on-site nursing facilities.

DATES: All interested parties may submit comments in writing no later than October 23, 2007. Copies of adverse comments received will be forwarded to the applicant noted above.

ADDRESSES: Address all comments concerning this notice to Anthony D. Dais, U.S. Department of Labor, Employment and Training Administration, 200 Constitution Avenue, NW., Room S–4231, Washington, DC 20210; or e-mail *Dais.Anthony@dol.gov*; or transmit via fax 202–693–3015 (this is not a toll-free number).

FOR FURTHER INFORMATION CONTACT: Anthony D. Dais, at telephone number (202) 693–2784 (this is not a toll-free number).

SUPPLEMENTARY INFORMATION: Section 188 of the Consolidated Farm and Rural Development Act of 1972, as established under 29 CFR part 75, authorizes the United States Department of Agriculture to make or guarantee loans or grants to finance industrial and business activities in rural areas. The Secretary of Labor must review the application for financial assistance for the purpose of certifying to the Secretary of Agriculture that the assistance is not calculated, or likely, to result in: (a) A transfer of any employment or business activity from one area to another by the loan applicant's business operation; or, (b) An increase in the production of goods, materials, services, or facilities in an area where there is not sufficient demand to employ the efficient capacity of existing competitive enterprises unless the financial assistance will not have an adverse impact on existing competitive enterprises in the area. The Employment and Training Administration within the Department of Labor is responsible for the review and certification process. Comments should address the two bases for certification and, if possible, provide data to assist in the analysis of these issues.

Signed at Washington, DC, October 2, 2007.

Gay M. Gilbert,

Administrator, Office of Workforce Investment, Employment and Training Administration.

[FR Doc. E7–19762 Filed 10–5–07; 8:45 am]

BILLING CODE 4510–FN–P

DEPARTMENT OF LABOR

Employment and Training Administration

Request for Certification of Compliance—Rural Industrialization Loan and Grant Program

AGENCY: Employment and Training Administration, Labor.

ACTION: Notice.

SUMMARY: The Employment and Training Administration is issuing this notice to announce the receipt of a ''Certification of Non-Relocation and Market and Capacity Information Report'' (Form 4279–2) for the following:

Applicant/Location: Specialty Protein Producers, LLC/South Sioux City, Nebraska.

Principal Product: The loan, guarantee, or grant application is for a new business venture to purchase and install equipment to manufacture organic soy protein isolates, organic soy coffee creamer, and organic soy fiber. The NAICS industry code for this enterprise is: 311222 Soybean Processing.

DATES: All interested parties may submit comments in writing no later than October 23, 2007. Copies of adverse comments received will be forwarded to the applicant noted above.

ADDRESSES: Address all comments concerning this notice to Anthony D. Dais, U.S. Department of Labor, Employment and Training Administration, 200 Constitution Avenue, NW., Room S–4231, Washington, DC 20210; or e-mail *Dais.Anthony@dol.gov;* or transmit via fax 202–693–3015 (this is not a toll-free number).

FOR FURTHER INFORMATION CONTACT: Anthony D. Dais, at telephone number (202) 693–2784 (this is not a toll-free number).

SUPPLEMENTARY INFORMATION: Section 188 of the Consolidated Farm and Rural Development Act of 1972, as established under 29 CFR part 75, authorizes the United States Department of Agriculture to make or guarantee loans or grants to finance industrial and business activities in rural areas. The Secretary of Labor must review the application for financial assistance for the purpose of certifying to the Secretary of Agriculture that the assistance is not calculated, or likely, to result in: (a) A transfer of any employment or business activity from one area to another by the loan applicant's business operation; or, (b) An increase in the production of goods, materials, services, or facilities in an area where there is not sufficient demand to employ the efficient capacity of existing competitive enterprises unless the financial assistance will not have an adverse impact on existing competitive enterprises in the area. The Employment and Training Administration within the Department of Labor is responsible for the review and certification process. Comments should address the two bases for certification and, if possible, provide data to assist in the analysis of these issues.

Signed at Washington, DC, this 2nd day of October, 2007.

Gay M. Gilbert,

Administrator, Office of Workforce Investment, Employment and Training Administration.

[FR Doc. E7–19763 Filed 10–5–07; 8:45 am]

BILLING CODE 4510–FN–P

LEGAL SERVICES CORPORATION

Sunshine Act Notice of Meeting of the Legal Services Corporation Board of Directors' Search Committee for LSC Inspector General

TIME AND DATE: Legal Services Corporation Board of Directors' *Search Committee for LSC Inspector General* will meet at 9:30 a.m., Eastern Daylight Time, on October 12, 2007.

LOCATION: The Georgetown Suites Hotel, 1111 30th Street, NW., Washington, DC.

STATUS OF MEETING: Closed. The transcript of any portions of the closed session falling within the relevant provision of the Government in Sunshine Act, 5 U.S.C. 552b(c)(2) and (6), and LSC's implementing regulation, 45 CFR 1622.5(a) and (e), will not be available for public inspection. The transcript of any portions not falling within either of these provisions will be available for public inspection.

Matters To Be Considered

Closed Session

1. Approval of Agenda.
2. Interviews of select candidates for the position of LSC Inspector General.

3. Review and discussion regarding qualifications of interviewed and other viable candidates.

4. Consider and act on further steps to be taken in connection with the selection and retention of a finalist for the position of Inspector General.

5. Consider and act on the selection of candidates to recommend to the Board of Directors for the Board's consideration.

6. Consider and act on adjournment of meeting.

CONTACT PERSON FOR INFORMATION: Patricia D. Batie, Manager of Board Operations, at (202) 295–1500.

SPECIAL NEEDS: Upon request, meeting notices will be made available in alternate formats to accommodate visual and hearing impairments. Individuals who have a disability and need an accommodation to attend the meeting may notify Patricia D. Batie, at (202) 295–1500.

October 4, 2007.

Victor M. Fortuno,

Vice President for Legal Affairs, General Counsel & Corporate Secretary.

[FR Doc. 07–4996 Filed 10–4–07; 2:17 pm]

BILLING CODE 7050–01–P

NATIONAL ARCHIVES AND RECORDS ADMINISTRATION

Agency Information Collection Activities: Proposed Collection; Comment Request

AGENCY: National Archives and Records Administration (NARA).

ACTION: Notice.

SUMMARY: NARA is giving public notice that the agency proposes to request extension of three currently approved information collections. The first is used by researchers who wish to do biomedical statistical research in archival records containing highly personal information. The second is an application that is submitted to a Presidential library to request the use of space in the library for a privately sponsored activity. The third is prepared by organizations that want to make paper-to-paper copies of archival holdings with their personal copiers. The public is invited to comment on the proposed information collection pursuant to the Paperwork Reduction Act of 1995.

DATES: Written comments must be received on or before December 10, 2007 to be assured of consideration.

ADDRESSES: Comments should be sent to: Paperwork Reduction Act Comments (NHP), Room 4400, National Archives and Records Administration, 8601 Adelphi Road, College Park, MD 20740–6001; or faxed to 301–713–7409; or electronically mailed to *tamee.fechhelm@nara.gov.*

FOR FURTHER INFORMATION CONTACT: Requests for additional information or copies of the proposed information collection and supporting statement should be directed to Tamee Fechhelm at telephone number 301–837–1694, or fax number 301–713–7409.

SUPPLEMENTARY INFORMATION: Pursuant to the Paperwork Reduction Act of 1995 (Pub. L. 104–13), NARA invites the general public and other Federal agencies to comment on proposed information collections. The comments and suggestions should address one or more of the following points: (a) Whether the proposed information collections are necessary for the proper performance of the functions of NARA; (b) the accuracy of NARA's estimate of the burden of the proposed information collections; (c) ways to enhance the quality, utility, and clarity of the information to be collected; and (d) ways to minimize the burden of the collection of information on respondents, including the use of information technology; and (e) whether small businesses are affected by these collections. The comments that are submitted will be summarized and included in the NARA request for Office of Management and Budget (OMB) approval. All comments will become a matter of public record. In this notice, NARA is soliciting comments concerning the following information collection:

1. *Title:* Statistical Research in Archival Records Containing Personal Information.

OMB number: 3095–0002.

Agency form number: None.

Type of review: Regular.

Affected public: Individuals.

Estimated number of respondents: 1.

Estimated time per response: 7 hours.

Frequency of response: On occasion.

Estimated total annual burden hours: 7 hours.

Abstract: The information collection is prescribed by 36 CFR 1256.28 and 36 CFR 1256.56. Respondents are researchers who wish to do biomedical statistical research in archival records containing highly personal information. NARA needs the information to evaluate requests for access to ensure that the requester meets the criteria in 36 CFR 1256.28 and that the proper safeguards will be made to protect the information.

2. *Title:* Application and Permit for Use of Space in Presidential Library and Grounds.

OMB number: 3095–0024.

Agency form number: NA Form 16011.

Type of review: Regular.

Affected public: Private organizations.

Estimated number of respondents: 1,000.

Estimated time per response: 20 minutes.

Frequency of response: On occasion.

Estimated total annual burden hours: 333 hours.

Abstract: The information collection is prescribed by 36 CFR 1280.94. The application is submitted to a Presidential library to request the use of space in the library for a privately sponsored activity. NARA uses the information to determine whether use will meet the criteria in 36 CFR 1280.94 and to schedule the date.

3. *Title:* Request to use personal paper-to-paper copiers at the National Archives at the College Park facility.

OMB number: 3095–0035.

Agency form number: None.

Type of review: Regular.

Affected public: Business or other for-profit.

Estimated number of respondents: 5.

Estimated time per response: 3 hours.

Frequency of response: On occasion.

Estimated total annual burden hours: 15 hours.

Abstract: The information collection is prescribed by 36 CFR 1254.86. Respondents are organizations that want to make paper-to-paper copies of archival holdings with their personal copiers. NARA uses the information to determine whether the request meets the criteria in 36 CFR 1254.86 and to schedule the limited space available.

Dated: October 2, 2007.

Martha Morphy,

Assistant Archivist for Information Services.

[FR Doc. E7–19845 Filed 10–5–07; 8:45 am]

BILLING CODE 7515–01–P

NATIONAL FOUNDATION ON THE ARTS AND THE HUMANITIES

Institute of Museum and Library Services; Sunshine Act Meeting of the National Museum and Library Services Board

AGENCY: Institute of Museum and Library Services (MLS), NFAH.

ACTION: Notice of meeting.

SUMMARY: This notice sets forth the agenda of the forthcoming meeting of the National Museum and Library Services Board. This notice also describes the function of the Board. Notice of the meeting is required under the Sunshine in Government Act.

TIME AND DATE: Monday, September 22, 2007 from 1 p.m. to 4 p.m.

AGENDA: Executive Briefing of the Twelfth National Museum and Library Service Board Meeting: 1 p.m.–4 p.m., (closed to the public).

PLACE: The meetings will be held in the Board room at the Institute of Museum and Library Services. 1800 M Street, NW., 9th Floor, Washington, DC 20036. Telephone: (202) 653–4676.

TIME AND DATE: Tuesday, September 23, 2007 from 1 p.m. to 4 p.m.

AGENDA: Twelfth National Museum and Library Services Board Meeting:

I. Welcome
II. Approval of Minutes
III. Financial Update
IV. Legislative Update
V. Board Program: International Issues
VI. Board Update
VII. Adjournment
(Open to the Public)

PLACE: The meeting will be held in the Board Room at the Institute of Museum and Library Services, 1800 M Street, NW., 9th Floor, Washington, DC 20036. Telephone: (202) 653–4676.

FOR FURTHER INFORMATION CONTACT: Elizabeth Lyons, Special Events and Board Liaison, Institute of Museum and Library Services, 1800 M Street, NW., 9th Floor, Washington, DC 20036. Telephone: (202) 653–4676.

SUPPLEMENTARY INFORMATION: The National Museum and Library Services Board is established under the Museum and Library Services Act, 20 U.S.C. section 9101 *et seq*. The Board advises the Director of the Institute on general policies with respect to the duties, powers, and authorities related to Museum and Library Services.

The Executive Briefing session, on Monday, September 22, 2007, will be closed pursuant to subsections (c)(4) and (c)(9) of section 552b of Title 5, United States Code because the Board will consider information that may disclose: Trade secrets and commercial or financial information obtained from a person and privileged or confidential; and information the premature disclosure of which would be likely to significantly frustrate implementation of a proposed agency action. The meeting from 1 p.m. until 4 p.m. on Tuesday, September 23, 2007 is open to the public.

If you need special accommodations due to a disability, please contact: Institute of Museum and Library Services, 1800 M Street, NW., 9th Fl., Washington, DC 20036. Telephone: (202) 653–4676; TDD (202) 653–4699 at least seven (7) days prior to the meeting date.

Dated: September 24, 2007/

Kate Fernstrom,

Chief of Staff.

[FR Doc. 07–4976 Filed 10–4–07; 12:57 pm]

BILLING CODE 7036–01–M

NUCLEAR REGULATORY COMMISSION

Biweekly Notice; Applications and Amendments to Facility Operating Licenses Involving No Significant Hazards Considerations

I. Background

Pursuant to section 189a.(2) of the Atomic Energy Act of 1954, as amended (the Act), the U.S. Nuclear Regulatory Commission (the Commission or NRC staff) is publishing this regular biweekly notice. The Act requires the Commission publish notice of any amendments issued, or proposed to be issued and grants the Commission the authority to issue and make immediately effective any amendment to an operating license upon a determination by the Commission that such amendment involves no significant hazards consideration, notwithstanding the pendency before the Commission of a request for a hearing from any person.

This biweekly notice includes all notices of amendments issued, or proposed to be issued from September 13, 2007 to September 26, 2007. The last biweekly notice was published on September 25, 2007 (72 FR 54771).

Notice of Consideration of Issuance of Amendments to Facility Operating Licenses, Proposed No Significant Hazards Consideration Determination, and Opportunity for a Hearing

The Commission has made a proposed determination that the following amendment requests involve no significant hazards consideration. Under the Commission's regulations in 10 CFR 50.92, this means that operation of the facility in accordance with the proposed amendment would not (1) Involve a significant increase in the probability or consequences of an accident previously evaluated; or (2) create the possibility of a new or different kind of accident from any accident previously evaluated; or (3) involve a significant reduction in a margin of safety. The basis for this proposed determination for each amendment request is shown below.

The Commission is seeking public comments on this proposed determination. Any comments received within 30 days after the date of publication of this notice will be considered in making any final determination. Within 60 days after the date of publication of this notice, the licensee may file a request for a hearing with respect to issuance of the amendment to the subject facility operating license and any person whose interest may be affected by this proceeding and who wishes to participate as a party in the proceeding must file a written request for a hearing and a petition for leave to intervene.

Normally, the Commission will not issue the amendment until the expiration of 60 days after the date of publication of this notice. The Commission may issue the license amendment before expiration of the 60-day period provided that its final determination is that the amendment involves no significant hazards consideration. In addition, the Commission may issue the amendment prior to the expiration of the 30-day comment period should circumstances change during the 30-day comment period such that failure to act in a timely way would result, for example in derating or shutdown of the facility. Should the Commission take action prior to the expiration of either the comment period or the notice period, it will publish in the **Federal Register** a notice of issuance. Should the Commission make a final No Significant Hazards Consideration Determination, any hearing will take place after issuance. The Commission expects that the need to take this action will occur very infrequently.

Written comments may be submitted by mail to the Chief, Rulemaking, Directives and Editing Branch, Division of Administrative Services, Office of Administration, U.S. Nuclear Regulatory Commission, Washington, DC 20555–0001, and should cite the publication date and page number of this **Federal Register** notice. Written comments may also be delivered to Room 6D22, Two White Flint North, 11545 Rockville Pike, Rockville, Maryland, from 7:30 a.m. to 4:15 p.m. Federal workdays. Copies of written comments received may be examined at the Commission's Public Document Room (PDR), located at One White Flint North, Public File Area O1F21, 11555 Rockville Pike (first floor), Rockville, Maryland. The filing of requests for a hearing and petitions for leave to intervene is discussed below.

Within 60 days after the date of publication of this notice, the licensee may file a request for a hearing with respect to issuance of the amendment to the subject facility operating license and any person whose interest may be affected by this proceeding and who wishes to participate as a party in the

proceeding must file a written request for a hearing and a petition for leave to intervene. Requests for a hearing and a petition for leave to intervene shall be filed in accordance with the Commission's ''Rules of Practice for Domestic Licensing Proceedings'' in 10 CFR Part 2. Interested persons should consult a current copy of 10 CFR 2.309, which is available at the Commission's PDR, located at One White Flint North, Public File Area 01F21, 11555 Rockville Pike (first floor), Rockville, Maryland. Publicly available records will be accessible from the Agencywide Documents Access and Management System's (ADAMS) Public Electronic Reading Room on the Internet at the NRC Web site, *http://www.nrc.gov/reading-rm/doc-collections/cfr/.* If a request for a hearing or petition for leave to intervene is filed within 60 days, the Commission or a presiding officer designated by the Commission or by the Chief Administrative Judge of the Atomic Safety and Licensing Board Panel, will rule on the request and/or petition; and the Secretary or the Chief Administrative Judge of the Atomic Safety and Licensing Board will issue a notice of a hearing or an appropriate order.

As required by 10 CFR 2.309, a petition for leave to intervene shall set forth with particularity the interest of the petitioner in the proceeding, and how that interest may be affected by the results of the proceeding. The petition should specifically explain the reasons why intervention should be permitted with particular reference to the following general requirements: (1) The name, address, and telephone number of the requestor or petitioner; (2) the nature of the requestor's/petitioner's right under the Act to be made a party to the proceeding; (3) the nature and extent of the requestor's/petitioner's property, financial, or other interest in the proceeding; and (4) the possible effect of any decision or order which may be entered in the proceeding on the requestor's/petitioner's interest. The petition must also set forth the specific contentions which the petitioner/requestor seeks to have litigated at the proceeding.

Each contention must consist of a specific statement of the issue of law or fact to be raised or controverted. In addition, the petitioner/requestor shall provide a brief explanation of the bases for the contention and a concise statement of the alleged facts or expert opinion which support the contention and on which the petitioner/requestor intends to rely in proving the contention at the hearing. The petitioner/requestor must also provide references to those specific sources and documents of which the petitioner is aware and on which the petitioner/requestor intends to rely to establish those facts or expert opinion. The petition must include sufficient information to show that a genuine dispute exists with the applicant on a material issue of law or fact. Contentions shall be limited to matters within the scope of the amendment under consideration. The contention must be one which, if proven, would entitle the petitioner/requestor to relief. A petitioner/requestor who fails to satisfy these requirements with respect to at least one contention will not be permitted to participate as a party.

Those permitted to intervene become parties to the proceeding, subject to any limitations in the order granting leave to intervene, and have the opportunity to participate fully in the conduct of the hearing.

If a hearing is requested, and the Commission has not made a final determination on the issue of no significant hazards consideration, the Commission will make a final determination on the issue of no significant hazards consideration. The final determination will serve to decide when the hearing is held. If the final determination is that the amendment request involves no significant hazards consideration, the Commission may issue the amendment and make it immediately effective, notwithstanding the request for a hearing. Any hearing held would take place after issuance of the amendment. If the final determination is that the amendment request involves a significant hazards consideration, any hearing held would take place before the issuance of any amendment.

A request for a hearing or a petition for leave to intervene must be filed by: (1) First class mail addressed to the Office of the Secretary of the Commission, U.S. Nuclear Regulatory Commission, Washington, DC 20555–0001, Attention: Rulemaking and Adjudications Staff; (2) courier, express mail, and expedited delivery services: Office of the Secretary, Sixteenth Floor, One White Flint North, 11555 Rockville Pike, Rockville, Maryland, 20852, Attention: Rulemaking and Adjudications Staff; (3) e-mail addressed to the Office of the Secretary, U.S. Nuclear Regulatory Commission, *HearingDocket@nrc.gov*; or (4) facsimile transmission addressed to the Office of the Secretary, U.S. Nuclear Regulatory Commission, Washington, DC, Attention: Rulemakings and Adjudications Staff at (301) 415–1101, verification number is (301) 415–1966. A copy of the request for hearing and petition for leave to intervene should also be sent to the Office of the General Counsel, U.S. Nuclear Regulatory Commission, Washington, DC 20555–0001, and it is requested that copies be transmitted either by means of facsimile transmission to (301) 415–3725 or by e-mail to *OGCMailCenter@nrc.gov.* A copy of the request for hearing and petition for leave to intervene should also be sent to the attorney for the licensee.

Nontimely requests and/or petitions and contentions will not be entertained absent a determination by the Commission or the presiding officer of the Atomic Safety and Licensing Board that the petition, request and/or the contentions should be granted based on a balancing of the factors specified in 10 CFR 2.309(a)(1)(i)–(viii).

For further details with respect to this action, see the application for amendment which is available for public inspection at the Commission's PDR, located at One White Flint North, Public File Area 01F21, 11555 Rockville Pike (first floor), Rockville, Maryland. Publicly available records will be accessible from the ADAMS Public Electronic Reading Room on the Internet at the NRC Web site, *http://www.nrc.gov/reading-rm/adams.html.* If you do not have access to ADAMS or if there are problems in accessing the documents located in ADAMS, contact the PDR Reference staff at 1 (800) 397–4209, (301) 415–4737 or by e-mail to *pdr@nrc.gov.*

Duke Power Company LLC, Docket Nos. 50–269, 50–270, and 50–287, Oconee Nuclear Station, Units 1, 2, and 3, Oconee County, SC

Date of amendment request: January 31, 2007.

Description of amendment request: The proposed amendments would revise the Technical Specifications to remove requirements that are no longer applicable due to the completion of the control room intake/booster fan modifications.

Basis for proposed no significant hazards consideration determination: As required by 10 CFR 50.91(a), the licensee has provided its analysis of the issue of no significant hazards consideration, which is presented below:

(1) Involve a significant increase in the probability or consequences of an accident previously evaluated:

The proposed change to Technical Specification 3.7.9 removes out of date requirements associated with temporary extensions of Required Action Completion Times that are not applicable because of the completion of the Control Room Intake/

Booster Fan Modification. As such, the proposed change is administrative. No actual plant equipment, operating practices, or accident analyses are affected by this change. Therefore, the proposed change does not involve a significant increase in the probability or consequences of an accident previously evaluated.

(2) Create the possibility of a new or different kind of accident from any kind of accident previously evaluated:

The proposed change to Technical Specification 3.7.9 removes out of date requirements associated with a temporary extension of Required Actions Completion Times that are no longer applicable because of the completion of the Control Room Intake/Booster Fan Modification. As such, the proposed changes are administrative. No actual plant equipment, operating practices, or accident analyses are affected by this change. No new accident causal mechanisms are created as a result of this change. The proposed change does not impact any plant systems that are accident initiators; neither does it adversely impact any accident mitigating systems. Therefore, this change does not create the possibility of a new or different kind of accident from any accident previously evaluated.

(3) Involve a significant reduction in a margin of safety: The proposed change does not adversely affect any plant safety limits, set points, or design parameters. The change also does not adversely affect the fuel, fuel cladding, Reactor Coolant System, or containment integrity. The proposed change eliminates out of date requirements and is administrative in nature. Therefore the proposed change does not involve a reduction in a margin of safety.

The NRC staff has reviewed the licensee's analysis and, based on this review, it appears that the three standards of 10 CFR 50.92(c) are satisfied. Therefore, the NRC staff proposes to determine that the amendment request involves no significant hazards consideration.

Attorney for licensee: Ms. Lisa F. Vaughn, Associate General Counsel and Managing Attorney, Duke Energy Carolinas, LLC, 526 South Church Street, EC07H, Charlotte, NC 28202.

NRC Branch Chief: Evangelos C. Marinos.

Entergy Operations, Inc., Docket No. 50–368, Arkansas Nuclear One, Unit No. 2, Pope County, AR

Date of amendment request: August 30, 2007.

Description of amendment request: The proposed amendment will revise the Limiting Condition for Operation (LCO) in Arkansas Nuclear One, Unit 2 (ANO–2), Technical Specification 3.1.3.4, ''CEA Drop Time,'' by revising the amount of time for an individual Control Element Assembly (CEA) to travel from a fully withdrawn position until it reaches the 90 percent insertion position. The current limit is ≤ 3.5 seconds. The proposed limit is ≤ 3.7 seconds. The arithmetic average drop time or the associated delay times are not impacted by the proposed change. This change is necessary to support the implementation of Next Generation Fuel in the next operating cycle.

Basis for proposed no significant hazards consideration determination: As required by 10 CFR 50.91(a), the licensee has provided its analysis of the issue of no significant hazards consideration, which is presented below:

1. Does the proposed change involve a significant increase in the probability or consequences of an accident previously evaluated?

Response: No.

The proposed change to the CEA drop time requirements have been evaluated for impact on the ANO–2 accident analyses. The change involves only an acceptance criterion for equipment performance and not physical changes. The CEA drop time acceptance criteria are used to develop trip reactivity insertion rates which are in turn used as inputs to the accident analyses.

Previous analyses demonstrated that the calculated trip reactivity for a realistic distributed CEA drop pattern is the same as the trip reactivity calculated for the nondistributed pattern. The current evaluations reverified this approach. The only difference is the maximum time limit for an individual CEA. Since the trip reactivity assumed in the accident analyses is not adversely impacted by consideration of a distributed CEA drop pattern with a larger distribution around the same average position, the proposed limits will not increase the probability or consequences of an accident previously evaluated.

2. Does the proposed change create the possibility of a new or different kind of accident from any accident previously evaluated?

Response: No.

The proposed change does not involve any new or modified structures, systems, or components; rather, it affects only an acceptance criterion for confirming the required performance of the existing CEA hardware. Therefore, the proposed change would not create the possibility of a new or different kind of accident from any previously evaluated.

3. Does the proposed change involve a significant reduction in a margin of safety?

Response: No.

The margins of safety related to CEA insertion are defined by the analyzed events in the Safety Analysis Report which credit the insertion. As demonstrated above, the proposed limits on the CEA drop time have no adverse impact on the accident analyses. Therefore, the margins of safety reflected in the accident analysis conclusions are not reduced.

The NRC staff has reviewed the licensee's analysis and, based on this review, it appears that the three standards of 10 CFR 50.92(c) are satisfied. Therefore, the NRC staff proposes to determine that the amendment request involves no significant hazards consideration.

Attorney for licensee: Terence A. Burke, Associate General Council—Nuclear Entergy Services, Inc., 1340 Echelon Parkway, Jackson, Mississippi 39213.

NRC Branch Chief: Thomas G. Hiltz.

Entergy Gulf States, Inc., and Entergy Operations, Inc., Docket No. 50–458, River Bend Station, Unit 1, West Feliciana Parish, LA

Date of amendment request: September 13, 2007.

Description of amendment request: The proposed change will add a License Condition 2.C to the Facility Operating License NPF–47 that allows River Bend Station, Unit 1, Technical Specifications (TS) surveillance intervals to be extended on a one-time basis for the fourteenth Fuel Cycle to account for the effects of a delayed refueling outage. The affected surveillances involve the 18-month hydrogen mixing system flow test and the 18-month Channel Calibration and Logic System Functional tests for one channel of a particular reactor water level instrument system. The reactor water level instrument channel provides an automatic signal to the following functions: Main Steam Line Isolation, Primary Containment and Drywell Isolation, Reactor Water Cleanup System Isolation, Secondary Containment and Fuel Building Isolation, and the Control Room Fresh Air System.

Basis for proposed no significant hazards consideration determination: As required by 10 CFR 50.91(a), the licensee has provided its analysis of the issue of no significant hazards consideration, which is presented below:

1. Does the proposed change involve a significant increase in the probability or consequences of an accident previously evaluated?

Response: No.

The requested action is a one-time extension to the performance interval of certain TS surveillance requirements. The performance of the surveillances, or the failure to perform the surveillances, is not a precursor to an accident. Performing the surveillances or failing to perform the surveillances does not affect the probability of an accident. Therefore, the proposed delay in performance of the surveillance requirements in this amendment request does not increase the probability of an accident previously evaluated.

A delay in performing the surveillances does not result in a system being unable to perform its required function. Additionally,

the defense in depth of the system design provides additional confidence that the safety function is maintained. In the case of this one-time extension request, the relatively short period of additional time that the systems and components will be in service before the next performance of the surveillance will not affect the ability of those systems to operate as designed. Therefore, the system required to mitigate accidents will remain capable of performing their required function. No new failure modes have been introduced because of this action and the consequences remain consistent with previously evaluated accidents. Therefore, the proposed delay in performance of the surveillance requirement in this amendment request does not involve a significant increase in the consequences of an accident.

Therefore, the proposed change does not involve a significant increase in the probability or consequences of an accident previously evaluated.

2. Does the proposed change create the possibility of a new or different kind of accident from any accident previously evaluated?

Response: No.

The proposed amendment does not involve a physical alteration of any system, structure, or component (SSC) or a change in the way any SSC is operated. The surveillance intervals of the level instrumentation are currently evaluated for 30 months which bounds the requested interval extension. The proposed amendment does not involve operation of any SSCs in a manner or configuration different from those previously recognized or evaluated. No new failure mechanisms will be introduced by the one-time surveillance requirement deferrals being requested.

Therefore, the proposed change does not create the possibility of a new or different kind of accident from any previously evaluated.

3. Does the proposed change involve a significant reduction in a margin of safety?

Response: No.

The proposed amendment is a one-time extension of the performance interval of certain TS surveillance requirements. Extending the surveillance requirements does not involve a modification of any TS Limiting Conditions for Operation. Extending the surveillance requirements do not involve a change to any limit on accident consequences specified in the license or regulations. Extending the surveillance requirements does not involve a change to how accidents are mitigated or a significant increase in the consequences of an accident. Extending the surveillance requirements does not involve a change in a methodology used to evaluate consequences of an accident. Extending these surveillance requirements does not involve a change in any operating procedure or process. The surveillance intervals of the level instrumentation are currently evaluated for 30 months which bounds the requested interval extension.

The components involved in this request have exhibited reliable operation based on the results of the most recent performances of their 18-month surveillance requirements and the associated functional surveillances.

Based on the limited additional period of time that the systems and components will be in service before the surveillance is next performed, as well as the operating experience that these surveillances are typically successful when performed, it is reasonable to conclude that the margin of safety associated with the surveillance requirement will not be affected by the requested extension.

Therefore, the proposed change does not involve a significant reduction in a margin of safety.

The NRC staff has reviewed the licensee's analysis and, based on this review, it appears that the three standards of 10 CFR 50.92(c) are satisfied. Therefore, the NRC staff proposes to determine that the amendment request involves no significant hazards consideration.

Attorney for licensee: Terence A. Burke, Associate General Council—Nuclear Entergy Services, Inc., 1340 Echelon Parkway, Jackson, Mississippi 39213.

NRC Branch Chief: Thomas G. Hiltz.

Nuclear Management Company, LLC, Docket Nos. 50–282 and 50–306, Prairie Island Nuclear Generating Plant, Units 1 and 2, Goodhue County, MN

Date of amendment request: July 19, 2007.

Description of amendment request: The changes in the proposed amendments are consistent with Regulatory Guide 1.52, ''Design, Inspection, and Testing Criteria for Air Filtration and Adsorption Units of Post-Accident Engineered-Safety-Feature Atmosphere Cleanup Systems in Light-Water-Cooled Nuclear Power Plants, Revision 3.'' The licensee proposed the following changes to technical specifications (TS) for the Prairie Island Nuclear Generating Plant (PINGP) Units 1 and 2:

1. TS 3.6.9, ''Shield Building Ventilation System'': Revise Surveillance Requirement (SR) 3.6.9.1 to require testing for greater than or equal to 15 minutes every 31 days.

2. TS 3.7.12, ''Auxiliary Building Special Ventilation System'': Revise SR 3.7.12.1 to require testing for greater than or equal to 15 minutes every 31 days.

3. TS 3.7.13, ''Spent Fuel Pool Special Ventilation System'': Revise SR 3.173.1 to require testing for greater than or equal to 15 minutes every 31 days.

4. TS 5.5.9, ''Ventilation Filter Testing Program'': Revise the first paragraph of this TS to require performance of the required program testing every 24 months.

Basis for proposed no significant hazards consideration determination: As required by 10 CFR 50.91(a), the licensee has provided its analysis of the issue of no significant hazards consideration, which is presented below:

1. Does the proposed change involve a significant increase in the probability or consequences of an accident previously evaluated?

Response: No.

This license amendment request proposes changes to Surveillance Requirements for the Shield Building Ventilation System, Auxiliary Building Special Ventilation System, and Spent Fuel Pool Special Ventilation System which revise the required system run-time with their filter heaters on. This license amendment request also proposes to revise the Frequency for performance of filter tests for these systems and the Control Room Special Ventilation System.

These systems are not accident initiators and therefore, these changes do not involve a significant increase in the probability of an accident. The proposed system and filter testing changes are consistent with current regulatory guidance for these systems and will continue to assure that these systems perform their design function. Thus these changes do not involve a significant increase in the consequences of an accident.

Therefore, the proposed changes do not involve a significant increase in the probability or consequences of an accident previously evaluated.

2. Does the proposed change create the possibility of a new or different kind of accident from any accident previously evaluated?

Response: No.

This license amendment request proposes changes to Surveillance Requirements for the Shield Building Ventilation System, Auxiliary Building Special Ventilation System, and Spent Fuel Pool Special Ventilation System which revise the required system run-time with their filter heaters on. This license amendment request also proposes to revise the Frequency for performance of filter tests for these systems and the Control Room Special Ventilation System.

The changes proposed for these safeguards ventilation systems do not change any system operations or maintenance activities. Testing requirements will be revised and will continue to demonstrate that the Limiting Conditions for Operation are met and the system components are functional. These changes do not create new failure modes or mechanisms and no new accident precursors are generated.

Therefore, the proposed changes do not create the possibility of a new or different kind of accident from any previously evaluated.

3. Does the proposed change involve a significant reduction in a margin of safety?

Response: No.

This license amendment request proposes changes to Surveillance Requirements for the Shield Building Ventilation System, Auxiliary Building Special Ventilation System, and Spent Fuel Pool Special

Ventilation System which revise the required system run-time with their filter heaters on. This license amendment request also proposes to revise the Frequency for performance of filter tests for these systems and the Control Room Special Ventilation System.

The design basis for the safeguards ventilation systems' heaters is to heat the incoming air which reduces the relative humidity. The heater testing changes proposed in this license amendment request will continue to demonstrate that the heaters are capable of heating the air, will perform their design function and are consistent with regulatory guidance, and thus these changes do not involve a significant reduction in a margin of safety. Periodic testing of the safeguards ventilation systems' filters is required to demonstrate that the filters perform their design function. The Frequency for performance of these filter tests proposed in this license amendment request will continue to demonstrate that the filters perform their intended function, is consistent with regulatory guidance and thus does not involve a significant reduction in a margin of safety.

Therefore, the proposed changes do not involve a significant reduction in a margin of safety.

The NRC staff has reviewed the licensee's analysis and, based on this review, it appears that the three standards of 10 CFR 50.92(c) are satisfied. Therefore, the NRC staff proposes to determine that the amendment requests involve no significant hazards consideration.

Attorney for licensee: Jonathan Rogoff, Esquire, Vice President, Counsel & Secretary, Nuclear Management Company, LLC, 700 First Street, Hudson, WI 54016.

NRC Acting Branch Chief: Travis L. Tate.

Omaha Public Power District, Docket No. 50–285, Fort Calhoun Station, Unit No. 1, Washington County, NE

Date of amendment request: September 11, 2007.

Description of amendment request: In August 2006, OPPD submitted a license amendment request to replace trisodium phosphate with sodium tetraborate (NaTB) for one cycle. By letter dated November 13, 2006, the U.S. Nuclear Regulatory Commission staff approved this request. The proposed amendment will revise Technical Specifications (TS) 2.3(4), ''Containment Sump Buffering Agent Specification and Volume Requirement,'' and TS 3.6, ''Surveillance Requirements,'' to allow the permanent use of NaTB as the containment sump buffering agent.

Basis for proposed no significant hazards consideration determination: As required by 10 CFR 50.91(a), the licensee has provided its analysis of the issue of no significant hazards consideration, which is presented below:

1. Does the proposed change involve a significant increase in the probability or consequences of an accident previously evaluated?

Response: No.

There are no changes to the design or operation of the plant affecting structures, systems, and components (SSCs) or accident functions due to long-term use of sodium tetraborate (NaTB). Similarly, there are no changes to the design or operation of the plant affecting SSCs or accident functions because of revising the volume of buffering agent required during Operating Modes 1 and 2. The changes are necessary due to the lower density of NaTB that will be obtained from a new vendor and provide for additional pH [potential of hydrogen] control margin in the post loss-of-coolant accident (LOCA) sump with minimal impact on electrical equipment qualification (EEQ) margin.

All SSCs function as designed and the performance requirements have been evaluated and found to be acceptable. NaTB will maintain pH ≥ 7.0 in the recirculation water following a LOCA. This function is maintained with the proposed change.

Analysis demonstrates that using NaTB as a buffering agent ensures the post-LOCA containment sump mixture will have a pH ≥ 7.0. The buffering agent is not an accident initiator; therefore, the use of NaTB on a permanent basis will not involve a significant increase in the probability or consequences of an accident previously evaluated.

2. Does the proposed change create the possibility of a new or different kind of accident from any accident previously evaluated?

Response: No.

No new accident scenarios, failure mechanisms, or single failures are introduced because of the proposed changes. All SSCs previously required for mitigation of an event remain capable of fulfilling their intended design function. The proposed changes have no adverse effects on any safety-related system or component and do not challenge the performance or integrity of any safety related system. The long-term use of NaTB as a buffering agent has been evaluated and no new accident scenarios or single failures are introduced.

Therefore, the proposed changes do not create the possibility of a new or different kind of accident from any previously evaluated.

3. Does the proposed change involve a significant reduction in a margin of safety?

Response: No.

Removing the restrictions limiting the use of NaTB to Fuel Cycle 24 to allow long-term operation with NaTB does not affect its capability to maintain the pH of the containment sump ≥ 7.0 post-LOCA. Previous evaluations have shown that NaTB is capable of maintaining the pH of the containment sump ≥ 7.0 post-LOCA. A volume of NaTB that is dependent on hot zero power critical boron concentration has been evaluated previously with respect to neutralization of all borated water and acid sources. These evaluations concluded that there would be no impact on pH control, and hence no reduction in the margin of safety related to post-LOCA conditions.

Therefore, the proposed changes do not involve a significant reduction in a margin of safety.

The NRC staff has reviewed the licensee's analysis and, based on this review, it appears that the three standards of 10 CFR 50.92(c) are satisfied. Therefore, the NRC staff proposes to determine that the amendment request involves no significant hazards consideration.

Attorney for licensee: James R. Curtiss, Esq., Winston & Strawn, 1700 K Street, NW., Washington, DC 20006–3817.

NRC Branch Chief: Thomas G. Hiltz.

Notice of Issuance of Amendments to Facility Operating Licenses

During the period since publication of the last biweekly notice, the Commission has issued the following amendments. The Commission has determined for each of these amendments that the application complies with the standards and requirements of the Atomic Energy Act of 1954, as amended (the Act), and the Commission's rules and regulations. The Commission has made appropriate findings as required by the Act and the Commission's rules and regulations in 10 CFR Chapter I, which are set forth in the license amendment.

Notice of Consideration of Issuance of Amendment to Facility Operating License, Proposed No Significant Hazards Consideration Determination, and Opportunity for A Hearing in connection with these actions was published in the **Federal Register** as indicated.

Unless otherwise indicated, the Commission has determined that these amendments satisfy the criteria for categorical exclusion in accordance with 10 CFR 51.22. Therefore, pursuant to 10 CFR 51.22(b), no environmental impact statement or environmental assessment need be prepared for these amendments. If the Commission has prepared an environmental assessment under the special circumstances provision in 10 CFR 51.22(b) and has made a determination based on that assessment, it is so indicated.

For further details with respect to the action see (1) The applications for amendment, (2) the amendment, and (3) the Commission's related letter, Safety Evaluation and/or Environmental Assessment as indicated. All of these items are available for public inspection at the Commission's Public Document Room (PDR), located at One White Flint

North, Public File Area 01F21, 11555 Rockville Pike (first floor), Rockville, Maryland. Publicly available records will be accessible from the Agencywide Documents Access and Management Systems (ADAMS) Public Electronic Reading Room on the internet at the NRC Web site, *http://www.nrc.gov/reading-rm/adams.html.* If you do not have access to ADAMS or if there are problems in accessing the documents located in ADAMS, contact the PDR Reference staff at 1 (800) 397–4209, (301) 415–4737 or by e-mail to *pdr@nrc.gov.*

AmerGen Energy Company, LLC, Docket No. 50–289, Three Mile Island Nuclear Station, Unit 1 (TMI–1), Dauphin County, PA

Date of application for amendment: December 12, 2006, as supplemented by letters dated May 31 and July 11, 2007.

Brief description of amendment: The amendment revised Technical Specification Sections 3.8 and 4.1 to delete references to radiation monitors RM–G6, RM–G7 and RM–G9. The administrative requirements for these monitors have been removed from the technical specifications and placed into licensee controlled documents.

Date of issuance: September 26, 2007.

Effective date: As of the date of issuance and shall be implemented within 60 days.

Amendment No.: 260.

Facility Operating License No. DPR–50. Amendment revised the license and the technical specifications.

Date of initial notice in ***Federal Register***: July 3, 2007 (72 FR 36521). The supplemental letters dated May 31 and July 11, 2007, provided additional information that clarified the application, did not expand the scope of the application as originally noticed and did not change the NRC staff's original proposed no significant hazards determination. The Commission's related evaluation of the amendment is contained in a Safety Evaluation dated September 26, 2007.

No significant hazards consideration comments received: No.

Dominion Nuclear Connecticut, Inc., Docket No. 50–336 and 50–423, Millstone Power Station, Unit Nos. 2 and 3 New London County, CT

Date of amendment request: September 1, 2006.

Brief description of amendment: The amendment revises the Millstone Power Station, Unit Nos. 2 and 3 Technical Specifications to replace the terms ''trash racks and screens'' with the term ''strainers.''

Date of issuance: September 18, 2007.

Effective date: As of the date of issuance and shall be implemented within 30 days from the date of issuance.

Amendment Nos.: 300 and 240.

Facility Operating License Nos. DPR–65 and NPF–49: Amendment revised the License and Technical Specifications.

Date of initial notice in ***Federal Register:*** October 24, 2006 (71 FR 62308).

The Commission's related evaluation of the amendment is contained in a Safety Evaluation dated September 18, 2007.

No significant hazards consideration comments received: No.

Exelon Generation Company, LLC, and PSEG Nuclear LLC, Docket Nos. 50–277 and 50–278, Peach Bottom Atomic Power Station, Units 2 and 3, York and Lancaster Counties, PA

Date of application for amendments: September 15, 2006.

Brief description of amendments: These amendments modify the Technical Specifications Surveillance Requirement 3.1.4.2, ''Control Rod Scram Times'' frequency from 120 days to 200 days.

Date of issuance: September 14, 2007.

Effective date: As of the date of issuance, and shall be implemented within 60 days.

Amendments Nos.: 262 and 266.

Renewed Facility Operating License Nos. DPR–44 and DPR–56: The amendments revised the License and Technical Specifications.

Date of initial notice in ***Federal Register:*** December 19, 2006 (71 FR 75994).

The Commission's related evaluation of the amendments is contained in a Safety Evaluation dated September 14, 2007.

No significant hazards consideration comments received: No.

Exelon Generation Company, LLC, and PSEG Nuclear LLC, Docket Nos. 50–277 and 50–278, Peach Bottom Atomic Power Station, Units 2 and 3, York and Lancaster Counties, PA

Date of application for amendments: March 6, 2007.

Brief description of amendments: The amendments modify the TS Surveillance Requirement 3.6.1.3.14, ''Primary Containment Isolation Valves.'' Specifically, the proposed change revises the allowed leakage from 11.5 standard cubic feet per hour (scfh) per valve to 46 scfh total leakage through all four valves.

Date of issuance: September 14, 2007.

Effective date: As of the date of issuance, to be implemented within 30 days.

Amendments Nos.: 263 and 267.

Renewed Facility Operating License Nos. DPR–44 and DPR–56: The amendments revised the License and Technical Specifications.

Date of initial notice in ***Federal Register:*** July 24, 2007 (72 FR 40342).

The Commission's related evaluation of the amendments is contained in a Safety Evaluation dated September 14, 2007.

No significant hazards consideration comments received: No.

FPL Energy Duane Arnold, LLC, Docket No. 50–331, Duane Arnold Energy Center, Linn County, IA

Date of application for amendment: February 27, 2004, as supplemented by letters dated August 9, 2004, January 7, 2005, May 11, and August 3, 2007.

Brief description of amendment: The amendment modifies license condition 2.C.(2)(b) to eliminate the requirement to perform a main generator load reject test. The request within the same application to modify license condition 2.C.(2)(b) to remove the requirement to perform a full main steam isolation valve closure test, associated with extended power uprate, resulted in Amendment No. 257, issued on March 17, 2005, under separate correspondence.

Date of issuance: September 20, 2007.

Effective date: As of the date of issuance and shall be implemented within 30 days.

Amendment No.: 266.

Facility Operating License No. DPR–49: The amendment revised the Operating License.

Date of initial notice in ***Federal Register:*** April 13, 2004 (69 FR 19572).

The supplemental letters contained clarifying information, did not change the initial no significant hazards consideration determination, and did not expand the scope of the original **Federal Register** notice.

The Commission's related evaluation of the amendment is contained in a Safety Evaluation dated September 20, 2007.

No significant hazards consideration comments received: No.

Indiana Michigan Power Company, Docket No. 50–316, Donald C. Cook Nuclear Plant, Unit 2, Berrien County, MI

Date of application for amendment: November 3, 2006, as supplemented on June 27, 2007.

Brief description of amendment: The amendment approved elimination of the resistance temperature detector (RTD) bypass piping and installing fast response thermowell-mounted RTDs in

the reactor coolant system loop piping. The amendment also revised Surveillance Requirement 3.3.1.15 of the Technical Specifications, deleting the requirement to perform surveillance on the reactor coolant system RTD bypass loop flow rate.

Date of issuance: September 19, 2007.

Effective date: As of the date of issuance and shall be implemented prior to entry into Mode 2 from the fall 2007 refueling outage.

Amendment No.: 280.

Facility Operating License No. DPR–74: Amendment revises the Technical Specifications.

Date of initial notice in ***Federal Register:*** January 3, 2007 (72 FR 153).

The Commission's related evaluation of the amendment is contained in a Safety Evaluation dated September 19, 2007.

No significant hazards consideration comments received: No.

Indiana Michigan Power Company, Docket No. 50–316, Donald C. Cook Nuclear Plant, Unit 2, Berrien County, MI

Date of application for amendment: September 15, 2006, as supplemented on April 20, July 6 and July 25, 2007.

Brief description of amendment: The amendment approves a plant design change that modifies the turbine control system, and changes the technical specifications, increasing the associated allowable low control fluid oil pressure from greater than or equal to (≥) 57 pounds per square inch gauge (psig) to ≥750 psig.

Date of issuance: September 21, 2007.

Effective date: As of the date of issuance and shall be implemented prior to entry into Mode 1 after the unit's Cycle 17 (fall 2007) refueling outage.

Amendment No.: 281.

Facility Operating License No. DPR–74: Amendment revises the Technical Specifications. The April 20, July 6, and July 25, 2007, supplements provided additional information that clarified the application, did not expand the scope of the application as originally noticed and did not change the NRC staff's original proposed no significant hazards consideration determination as published in the ***Federal Register*** on November 21, 2006 (71 FR 67396).

Date of initial notice in **Federal Register**: November 21, 2006 (71 FR 67396).

The Commission's related evaluation of the amendment is contained in a Safety Evaluation dated September 21, 2007.

No significant hazards consideration comments received: No.

Pacific Gas and Electric Company, Docket No. 50–133, Humboldt Bay Power Plant, Unit 3, Humboldt County, CA

Date of application for amendment: April 4, 2007.

Brief description of amendment: The amendment revises the license to allow the results of near-term surveys, performed on a portion of the plant site, to be included in the eventual Final Status Survey for license termination.

Date of issuance: September 11, 2007.

Effective date: As of the date of issuance and shall be implemented when a cross contamination prevention and monitoring plan is implemented.

Amendment No.: 40.

Facility Operating License No. DPR–7: This amendment revises the license.

Date of initial notice in ***Federal Register:*** *July 31, 2007 (72 FR 41787).*

The Commission's related evaluation of the amendment is contained in a Safety Evaluation dated September 11, 2007.

No significant hazards consideration comments received: No.

Tennessee Valley Authority, Docket Nos. 50–327 and 50–328, Sequoyah Nuclear Plant, Units 1 and 2, Hamilton County, TN

Date of application for amendments: February 26, 2007, as supplemented on July 26, 2007.

Brief description of amendments: The amendments revise the allowable value for Functional Unit 17.A in Technical Specification Table 2.2–1, ''Reactor Trip System Instrumentation Trip Setpoints,'' from greater than or equal to 43 pounds per square inch gauge (psig) to 39.5 psig.

Date of issuance: September 20, 2007.

Effective date: As of the date of issuance and shall be implemented within 45 days.

Amendment Nos: 316 and 306.

Facility Operating License Nos. DPR–77 and DPR–79: Amendments revised the technical specifications.

Date of initial notice in ***Federal Register***: April 24, 2007 (72 FR 20385). The July 26, 2007, supplemental letter provided clarifying information that was within the scope of the initial notice and did not change the initial proposed no significant hazards consideration determination.

The Commission's related evaluation of the amendments is contained in a safety evaluation dated September 20, 2007.

No significant hazards consideration comments received: No.

Dated at Rockville, Maryland, this 27th day of September 2007.

For the Nuclear Regulatory Commission.

Catherine Haney,

Director, Division of Operating Reactor, Licensing Office of Nuclear Reactor Regulation.

[FR Doc. E7–19553 Filed 10–5–07; 8:45 am]

BILLING CODE 7590–01–P

OFFICE OF PERSONNEL MANAGEMENT

Privacy Act of 1974; Computer Matching Program

AGENCY: Office of Personnel Management.

ACTION: Notice—computer matching between the Office of Personnel Management and the Social Security Administration.

SUMMARY: In accordance with the Privacy Act of 1974 (5 U.S.C. 552a), as amended by the Computer Matching and Privacy Protection Act of 1988 (Pub. L. 100–503), Office of Management and Budget (OMB) Guidelines on the Conduct of Matching Programs (54 FR 25818 published June 19, 1989), and OMB Circular No. A–130, revised November 28, 2000, ''Management of Federal Information Resources,'' the Office of Personnel Management (OPM) is publishing notice of its new computer matching program with the Social Security Administration (SSA).

DATES: OPM will file a report of the subject matching program with the Committee on Homeland Security and Governmental Affairs of the Senate, the Committee on Oversight and Government Reform of the House of Representatives and the Office of Information and Regulatory Affairs, Office of Management and Budget (OMB). The matching program will begin 30 days after the **Federal Register** notice has been published or 40 days after the date of OPM's submissions of the letters to Congress and OMB, whichever is later. The matching program will continue for 18 months from the beginning date and may be extended an additional 12 months thereafter. Subsequent matches will run until one of the parties advises the other in writing of its intention to reevaluate, modify and/or terminate the agreement.

ADDRESSES: Send comments to Sean Hershey, Chief, Management Information Branch, Office of Personnel Management, Room 4316, 1900 E Street, NW., Washington, DC 20415.

FOR FURTHER INFORMATION CONTACT: James Sparrow on (202) 606–1803.

SUPPLEMENTARY INFORMATION:

A. General

The Privacy Act (5 U.S.C. 552a), as amended, establishes the conditions under which computer matching involving the Federal government could be performed and adding certain protections for individuals applying for and receiving Federal benefits. Section 7201 of the Omnibus Budget Reconciliation Act of 1990 (Pub. L. 101–508) further amended the Privacy Act regarding protections for such individuals.

The Privacy Act, as amended, regulates the use of computer matching by Federal agencies when records in a system of records are matched with other Federal, State, or local government records. Among other things, it requires Federal agencies involved in computer matching programs to:

(1) Negotiate written agreements with the other agency for agencies participating in the matching programs;

(2) Obtain the approval of the match agreement by the Data Integrity Boards (DIB) of the participating Federal agencies;

(3) Furnish detailed reports about matching programs to Congress and OMB;

(4) Notify applicants and beneficiaries that their records are subject to matching;

(5) Verify match findings before reducing, suspending, termination or denying an individual's benefits or payments.

B. OPM Computer Matches Subject to the Privacy Act

We have taken action to ensure that all of OPM's computer matching programs comply with the requirements of the Privacy Act, as amended.

Notice of Computer Matching Program, Office of Personnel Management (OPM) With the Social Security Administration (SSA)

A. Participating Agencies

OPM and SSA.

B. Purpose of the Matching Program

The purpose of this agreement is to establish the conditions under which SSA agrees to disclose tax return and/or Social Security benefit information to OPM. The SSA records will be used in redetermining and recomputing the benefits of certain annuitants and survivors whose computations are based, in part, on military service performed after December 1956 under the Civil Service Retirement System (CSRS) and certain annuitants and survivors whose annuity computation under the Federal Employees Retirement System (FERS) have a CSRS component.

C. Authority for Conducting the Matching Program

Chapters 83 and 84 of title 5 of the United States Code provide the basis for computing annuities under CSRS and FERS, respectively, and require release of information by SSA to OPM in order to administer data exchanges involving military service performed by an individual after December 31, 1956. The CSRS requirement is codified at section 8332(j) of title 5 of the United States Code; the FERS requirement is codified at section 8422(e)(4) of title 5 of the United States Code. The responsibilities of SSA and OPM with respect to information obtained pursuant to this agreement are also in accordance with the following: The Privacy Act (5 U.S.C. 552a), as amended; section 307 of the Omnibus Budget Reconciliation Act of 1982 (Pub. L. 97–253), codified at section 8332 Note of title 5 of the United States Code; section 1306(a) of title 42 of the United States Code; and section 6103(1)(11) of title 26 of the United States Code.

D. Categories of Records and Individuals Covered by the Match

SSA will disclose data from its MBR file (60–0090, Master Beneficiary Record, SSA/OEEAS) and MEF file (60–0059, Earnings Recording and Self-Employment Income System, SSA/OEEAS) and manually-extracted military wage information from SSA's ''1086'' microfilm file when required (71 FR 1796, January 11, 2006). OPM will provide SSA with an electronic finder file from the OPM system of records published as OPM/Central-1 (Civil Service Retirement and Insurance Records) on October 8, 1999 (64 FR 54930), as amended on May 3, 2000 (65 FR 25775). The system of records involved have routine uses permitting the disclosures needed to conduct this match.

E. Privacy Safeguards and Security

The Privacy Act (5 U.S.C. 552a(o)(1)(G)) requires that each matching agreement specify procedures for ensuring the administrative, technical and physical security of the records matched and the results of such programs.

All Federal agencies are subject to: The Federal Information Security Management Act of 2002 (FISMA) (44 U.S.C. 3541 *et seq.*); related OMB circulars and memorandum (e.g., OMB Circular A–130 and OMB M–06–16); National Institute of Science and Technology (NIST) directives; and the Federal Acquisition Regulations (FAR). These laws, circulars, memoranda, directives and regulations include requirements for safeguarding Federal information systems and personally identifiable information used in Federal agency business processes, as well as related reporting requirements. OPM and SSA recognize that all laws, circulars, memoranda, directives and regulations relating to the subject of this agreement and published subsequent to the effective date of this agreement must also be implemented if mandated.

FISMA requirements apply to all Federal contractors and organizations or sources that possess or use Federal information, or that operate, use, or have access to Federal information systems on behalf of an agency. OPM will be responsible for oversight and compliance of their contractors and agents. Both OPM and SSA reserve the right to conduct onsite inspection to monitor compliance with FISMA regulations.

F. Inclusive Dates of the Match

The matching program shall become effective upon the signing of the agreement by both parties to the agreement and approval of the agreement by the Data Integrity Boards of the respective agencies, but no sooner than 40 days after notice of this matching program is sent to Congress and the Office of Management and Budget or 30 days after publication of this notice in the **Federal Register**, whichever is later. The matching program will continue for 18 months from the effective date and may be extended for an additional 12 months thereafter, if certain conditions are met.

U.S. Office of Personnel Management.

Linda M. Springer,

Director.

[FR Doc. E7–19792 Filed 10–5–07; 8:45 am]

BILLING CODE 6325–38–P

SECURITIES AND EXCHANGE COMMISSION

[Investment Company Act Release No. 28010; 812–13419]

JNF Advisors, Inc. and Northern Lights Variable Trust; Notice of Application

October 2, 2007.

AGENCY: Securities and Exchange Commission (''Commission'').

ACTION: Notice of an application for an order under section 6(c) of the Investment Company Act of 1940 (''Act'') for an exemption from section 15(a) of the Act and rule 18f–2 under

the Act, as well as from certain disclosure requirements.

SUMMARY OF THE APPLICATION: Applicants request an order permitting them to enter into and materially amend subadvisory agreements without shareholder approval and granting relief from certain disclosure requirements.

APPLICANTS: JNF Advisors, Inc. (''JNF Advisors'') and Northern Lights Variable Trust (''Trust'').

FILING DATES: The application was filed on August 24, 2007, and amended on October 1, 2007.

HEARING OR NOTIFICATION OF HEARING: An order granting the application will be issued unless the Commission orders a hearing. Interested persons may request a hearing by writing to the Commission's Secretary and serving applicants with a copy of the request, personally or by mail. Hearing requests should be received by the Commission by October 29, 2007 and should be accompanied by proof of service on applicants, in the form of an affidavit or, for lawyers, a certificate of service. Hearing requests should state the nature of the writer's interest, the reason for the request, and the issues contested. Persons who wish to be notified of a hearing may request by writing to the Commission's Secretary.

ADDRESSES: Secretary, U.S. Securities and Exchange Commission, 100 F Street, NE., Washington, DC 20549–1090. Applicants, c/o JoAnn Strasser, Esq., Thompson Hine, 312 Walnut Street, Cincinnati, Ohio 45202.

FOR FURTHER INFORMATION CONTACT: Donna Tumminio, Law Clerk, at (202) 551–6826, or Nadya B. Roytblat, Assistant Director, at (202) 551–6821 (Office of Investment Company Regulation, Division of Investment Management).

SUPPLEMENTARY INFORMATION: The following is a summary of the application. The complete application may be obtained for a fee at the Commission's Public Reference Branch, 100 F Street, NE., Washington, DC 20549–0102 (telephone (202) 551–5850).

Applicants' Representations

1. The Trust is organized as a Delaware statutory trust and is registered under the Act as an open-end management investment company. JNF Advisors, a Delaware corporation, is registered as an investment adviser under the Investment Advisers Act of 1940 (''Advisers Act'').

2. The Trust currently offers 5 separate series, each with its own investment objective(s), policies and restrictions. JNF Advisors serves as the investment adviser to two of the series of the Trust (each, a ''Fund,'' and collectively, the ''Funds''). JNF Advisors has entered into an investment advisory agreement with the Trust for each Fund (each, an ''Advisory Agreement,'' and collectively, the ''Advisory Agreements'') approved by the board of trustees of the Trust (the ''Board''), including a majority of the trustees who are not ''interested persons,'' as defined in section 2(a)(19) of the Act (the ''Independent Trustees''), and the shareholders of each Fund.[1]

3. The Advisory Agreements permit JNF Advisors to enter into separate advisory agreements (''Sub-Advisory Agreements'') with sub-advisers (''Sub-Advisers''). Each Sub-Adviser will be registered under the Advisers Act. Under the terms of each Sub-Advisory Agreement, the Sub-Adviser will be responsible for the day-to-day decision-making with respect to the Fund's investment program and will determine which securities will be purchased and sold. JNF Advisors will select Sub-Advisers based on an evaluation of their skills and proven abilities in managing assets pursuant to a specific investment style. JNF Advisors will monitor and evaluate the performance of Sub-Advisers and recommend to the Board their hiring, termination and replacement. In return for providing overall investment management services, including Sub-Adviser monitoring and evaluation, JNF Advisors will receive a fee under its Advisory Agreement from each Fund. JNF Advisors will compensate a Sub-Adviser out of the management fee paid to JNF Advisers by the Fund.

4. Applicants request an order to permit JNF Advisors, subject to Board approval, to enter into and materially amend Sub-Advisory Agreements without obtaining shareholder approval. The requested relief will not extend to any Sub-Adviser that is an ''affiliated person,'' as defined in section 2(a)(3) of the Act, of a Fund or JNF Advisors, other than by reason of serving as a Sub-Adviser to one or more of the Funds (''Affiliated Sub-Adviser'').

5. Applicants also request an exemption from the various disclosure provisions described below that may require each Fund to disclose fees paid by JNF Advisors to the Sub-Advisers. An exemption is requested to permit each Fund to disclose (both as a dollar amount and as a percentage of the Fund's net assets) the: (a) Aggregate fees paid to JNF Advisors and any Affiliated Sub-Advisers; and (b) aggregate fees paid to Sub-Advisers other than Affiliated Sub-Advisers (collectively, ''Aggregate Fee Disclosure''). If a Fund employs an Affiliated Sub-Adviser, the Fund will provide separate disclosure of any fees paid to the Affiliated Sub-Adviser.

Applicants' Legal Analysis

1. Section 15(a) of the Act provides, in relevant part, that it is unlawful for any person to act as an investment adviser to a registered investment company except under a written contract that has been approved by a vote of a majority of the company's outstanding voting securities. Rule 18f–2 under the Act provides that each series or class of stock in a series company affected by a matter must approve the matter if the Act requires shareholder approval.

2. Form N–1A is the registration statement used by open-end investment companies. Item 14(a)(3) of Form N–1A requires disclosure of the method and amount of the investment adviser's compensation.

3. Rule 20a–1 under the Act requires proxies solicited with respect to an investment company to comply with Schedule 14A under the Securities Exchange Act of 1934 (''Exchange Act''). Items 22(c)(1)(ii), 22(c)(1)(iii), 22(c)(8) and 22(c)(9) of Schedule 14A, taken together, require a proxy statement for a shareholder meeting at which the advisory contract will be voted upon to include the ''rate of compensation of the investment adviser,'' the ''aggregate amount of the investment adviser's fees,'' a description of the ''terms of the contract to be acted upon,'' and, if a change in the advisory fee is proposed, the existing and proposed fees and the difference between the two fees.

4. Form N–SAR is the semi-annual report filed with the Commission by registered investment companies. Item 48 of Form N–SAR requires investment companies to disclose the rate schedule for fees paid to their investment advisers, including the Sub-Advisers.

5. Regulation S–X sets forth the requirements for financial statements

[1] Applicants also request relief with respect to any future series of the Trust and any other existing or future registered open-end management investment company or series thereof that: (a) Is advised by JNF Advisors or any entity controlling, controlled by, or under common control with JNF Advisors; (b) uses the multi-manager structure described in the application; and (c) complies with the terms and conditions contained in the application (included in the term ''Funds''). The Trust is the only existing investment company that currently intends to rely on the requested order. If the name of any Fund contains the name of a Sub-Adviser (as defined below), the name JNF Advisors or the name of the entity controlling, controlled by, or under common control with JNF Advisors that serves as the primary adviser to such Fund will precede the name of the Sub-Adviser.

required to be included as part of investment company registration statements and shareholders reports filed with the Commission. Sections 6–07(2)(a), (b) and (c) of Regulation S–X require that investment companies include in their financial statements information about investment advisory fees.

6. Section 6(c) of the Act provides that the Commission may exempt any person, security, or transaction or any class or classes of persons, securities, or transactions from any provisions of the Act, or from any rule thereunder, if and to the extent that such exemption is necessary or appropriate in the public interest and consistent with the protection of investors and the purposes fairly intended by the policies and provisions of the Act. Applicants state that the requested relief meets this standard for the reasons discussed below.

7. Applicants assert that the Funds' shareholders rely on JNF Advisors to select and monitor the Sub-Advisers best suited to achieve a Fund's investment objectives. Applicants contend that, from the perspective of the investor, the role of the Sub-Advisers is comparable to that of individual portfolio managers employed by traditional investment advisory firms. Applicants state that requiring shareholder approval of each Sub-Advisory Agreement would impose unnecessary costs and delays on the Funds and may preclude JNF Advisors from acting promptly in a manner considered advisable by the Board. Applicants note that the Advisory Agreement will remain subject to section 15(a) of the Act and rule 18f–2 under the Act.

8. Applicants assert that many Sub-Advisers use a ''posted'' rate schedule to set their fees. Applicants state that, while Sub-Advisers are willing to negotiate fees lower than those posted in the schedule, they are reluctant to do so when the fees are disclosed to other prospective and existing customers. Applicants submit that the requested relief will encourage potential Sub-Advisers to negotiate lower Sub-Advisory fees with JNF Advisors, the benefits of which may be passed on to the Funds' shareholders.

Applicants' Conditions

Applicants agree that any order granting the requested relief will be subject to the following conditions:

1. JNF Advisors will provide general investment management services to each Fund, including overall supervisory responsibility for the general management and investment of the Fund's assets, and subject to review and approval of the Board, will: (a) Set the Fund's overall investment strategies; (b) evaluate, select and recommend Sub-Advisers to manage all or a portion of the Fund's assets; (c) allocate and, when appropriate, reallocate the Fund's assets among multiple Sub-Advisers; (d) monitor and evaluate Sub-Advisers' performance; and (e) implement procedures reasonably designed to ensure that the Sub-Advisers comply with the relevant Fund's investment objective, policies, and restrictions.

2. Before a Fund may rely on the requested order herein, the operation of the Fund in the manner described in the application will be approved by a majority of the Fund's outstanding voting securities, as defined in the Act, or, in the case of a Fund whose public shareholders purchase shares on the basis of a prospectus containing the disclosure contemplated by condition 3 below, by the initial shareholder before such Fund's shares are offered to the public.

3. The prospectus for each Fund will disclose the existence, substance and effect of any order granted pursuant to the Application. In addition, each Fund will hold itself out to the public as employing the manager of managers structure described in the Application. The prospectus will prominently disclose that JNF Advisors has ultimate responsibility, subject to oversight by the Board, to oversee the Sub-Advisers and recommend their hiring, termination, and replacement.

4. Within 90 days of the hiring of any new Sub-Adviser, shareholders of the relevant Fund will be furnished all information about the new Sub-Adviser that would be included in a proxy statement, except as modified to permit Aggregate Fee Disclosure. This information will include Aggregate Fee Disclosure and any change in such disclosure caused by the addition of a new Sub-Adviser. To meet this obligation, JNF Advisors will provide shareholders of the applicable Fund, within 90 days of the hiring of a new Sub-Adviser, with an information statement meeting the requirements of Regulation 14C, Schedule 14C and Item 22 of Schedule 14A under the Exchange Act, except as modified by the order to permit Aggregate Fee Disclosure.

5. No trustee or officer of the Trust or a Fund or director or officer of JNF Advisors will own directly or indirectly (other than through a pooled investment vehicle that is not controlled by such person) any interest in a Sub-Adviser, except for: (a) Ownership of interests in JNF Advisors or any entity that controls, is controlled by, or is under common control with JNF Advisors; or (b) ownership of less than 1% of the outstanding securities of any class of equity or debt of a publicly traded company that is either a Sub-Adviser or an entity that controls, is controlled by, or is under common control with a Sub-Adviser.

6. At all times, at least a majority of the Board will be Independent Trustees, and the nomination of new or additional Independent Trustees will be placed within the discretion of the then-existing Independent Trustees.

7. Whenever a Sub-Adviser change is proposed for a Fund with an Affiliated Sub-Adviser, the Fund's Board, including a majority of the Independent Trustees, will make a separate finding, reflected in the Board minutes, that such change is in the best interests of the Fund and its shareholders and does not involve a conflict of interest from which JNF Advisors or the Affiliated Sub-Adviser derives an inappropriate advantage.

8. Each Fund will disclose in its registration statement the Aggregate Fee Disclosure.

9. Independent legal counsel, as defined in rule 0–1(a)(6) under the Act, will be engaged to represent the Independent Trustees. The selection of such counsel will be within the discretion of the then-existing Independent Trustees.

10. JNF Advisors will provide the Board, no less frequently than quarterly, with information about JNF Advisors' profitability on a per Fund basis. This information will reflect the impact on profitability of the hiring or termination of any Sub-Adviser during the applicable quarter.

11. Whenever a Sub-Adviser is hired or terminated, JNF Advisors will provide the Board with information showing the expected impact on JNF Advisors' profitability.

12. JNF Advisors will not enter into a Sub-Advisory Agreement with any Affiliated Sub-Adviser, without such agreement, including the compensation to be paid thereunder, being approved by the shareholders of the applicable Fund.

13. The requested order will expire on the effective date of rule 15a–5 under the Act, if adopted.

For the Commission, by the Division of Investment Management, under delegated authority.

Nancy M. Morris,

Secretary.

[FR Doc. E7–19753 Filed 10–5–07; 8:45 am]

BILLING CODE 8011–01–P

SECURITIES AND EXCHANGE COMMISSION

[FIle No. 500–1]

In the Matter of Certain Companies Quoted on the Pink Sheets: Alliance Transcription Services, Inc., Prime Petroleum Group, Inc., T.W. Christian, Inc.; Order of Suspension of Trading

October 4, 2007.

It appears to the Securities and Exchange Commission that there is a lack of current and accurate information concerning the securities of the issuers listed below. As set forth below for each issuer, questions have arisen regarding the adequacy and accuracy of publicly-disseminated information concerning, among other things: (1) The companies' assets, (2) the companies' business operations and/or management, (3) the companies' current financial condition, and/or (4) financing arrangements involving the issuance of the companies' shares.

1. *Alliance Transcription Services, Inc.* is a Nevada company with offices in Maine and California. Questions have arisen regarding the adequacy and accuracy of press releases concerning the company's assets and its current operations and financial condition and transactions involving the issuance of the company's shares.

2. *Prime Petroleum Group, Inc.* is a Nevada company with offices in Washington. Questions have arisen regarding the adequacy and accuracy of press releases and other publicly-disseminated information concerning the company's assets and its current operations, management and financial condition.

3. *T.W. Christian, Inc.* is a Minnesota company with offices in Vancouver, British Columbia, Canada. Questions have arisen regarding the adequacy and accuracy of press releases concerning the company's assets and its current operations, management and financial condition.

The Commission is of the opinion that the public interest and the protection of investors require a suspension of trading in the securities of the companies listed above.

Therefore, *it is ordered,* pursuant to section 12(k) of the Securities Exchange Act of 1934, that trading in the securities of the companies listed above is suspended for the period from 9:30 a.m. EDT, October 4, 2007, through 11:59 p.m. EDT, on October 17, 2007.

By the Commission.

Nancy M. Morris,

Secretary.

[FR Doc. 07–4971 Filed 10–4–07; 10:28 am]

BILLING CODE 8011–01–P

SECURITIES AND EXCHANGE COMMISSION

[Release No. 34–56593; File No. SR–NYSEArca–2007–96]

Self-Regulatory Organizations; NYSE Arca, Inc.; Notice of Filing and Order Granting Accelerated Approval of Proposed Rule Change, as Modified by Amendment No. 1 Thereto, To Amend the Initial Listing Standards for Index-Linked Securities

October 1, 2007.

Pursuant to Section 19(b)(1) of the Securities Exchange Act of 1934 (''Act'') [1] and Rule 19b–4 thereunder,[2] notice is hereby given that on September 17, 2007, NYSE Arca, Inc. (''NYSE Arca'' or ''Exchange''), through its wholly owned subsidiary, NYSE Arca Equities, Inc. (''NYSE Arca Equities''), filed with the Securities and Exchange Commission (''Commission'') the proposed rule change as described in Items I and II below, which items have been substantially prepared by the Exchange. On September 27, 2007, the Exchange filed Amendment No. 1 to the proposed rule change. This order provides notice of and approves the proposed rule change, as modified by Amendment No. 1 thereto, on an accelerated basis.

I. Self-Regulatory Organization's Statement of the Terms of Substance of the Proposed Rule Change

The Exchange proposes to amend NYSE Arca Equities Rule 5.2(j)(6)(a) to (i) permit the listing of Index-Linked Securities [3] that do not meet the one million publicly held trading units and/or the 400 minimum number of public holders initial distribution requirements, subject to certain conditions, (ii) decrease the minimum principal amount/market value of $20 million to $4 million for an initial listing of Index-Linked Securities, and (iii) make a non-substantive clarification to the cross-reference to ''General Criteria.'' The text of the proposed rule change is available at the Exchange, the Commission's Public Reference Room, and *www.nyse.com.*

II. Self-Regulatory Organization's Statement of the Purpose of, and Statutory Basis for, the Proposed Rule Change

In its filing with the Commission, the Exchange included statements concerning the purpose of, and basis for, the proposed rule change and discussed any comments it received on the proposed rule change. The text of these statements may be examined at the places specified in Item III below. The Exchange has prepared summaries, set forth in Sections A, B and C below, of the most significant aspects of such statements.

A. Self-Regulatory Organization's Statement of the Purpose of, and Statutory Basis for, the Proposed Rule Change

1. Purpose

The Exchange proposes to amend NYSE Arca Equities Rule 5.2(j)(6)(a) to permit the listing of Index-Linked Securities that do not meet the one million publicly held trading units and/or the 400 minimum number of public holders initial distribution requirements, subject to certain conditions. The Commission has approved a similar proposal filed by the New York Stock Exchange LLC (''NYSE'').[4]

NYSE Arca Equities Rule 5.2(j)(6)(a) generally requires that each issue of Index-Linked Securities have at least one million publicly held trading units and that there be at least 400 public beneficial holders of such securities, provided that, if the issue of Index-Linked Securities is traded in thousand dollar denominations, the 400 minimum public beneficial holders initial distribution requirement would not apply. The Exchange proposes to add an additional exemption from the general requirements of NYSE Arca Equities Rule 5.2(j)(6)(a) such that, if an issue of Index-Linked Securities are redeemable at the option of the holders thereof on at least a weekly basis, both the minimum one million publicly held trading units and 400 beneficial holders initial distribution requirements would not apply.

The Exchange believes that, where there is such a weekly redemption right, the same justification exists for an exemption from the requirement to have one million units issued at the time of listing and the minimum 400 public

---

[1] 15 U.S.C. 78s(b)(1).

[2] 17 CFR 240.19b–4.

[3] Index-Linked Securities are defined as securities that provide for the payment at maturity of a cash amount based on the performance of an underlying index or indexes. *See* NYSE Arca Equities Rule 5.2(j)(6).

[4] *See* Securities Exchange Act Release No. 56271 (August 16, 2007), 72 FR 47107 (August 22, 2007) (SR–NYSE–2007–74).

beneficial holders requirement. The Exchange believes that a weekly redemption right should ensure a strong correlation between the market price of the Index-Linked Securities and the performance of the underlying index or asset, as the case may be, as holders would be unlikely to sell their securities for less than their redemption value if they have a weekly right to be redeemed for their full value. In addition, in the case of those Index-Linked Securities with a weekly redemption feature that are currently listed, as well as all of those that are currently proposed to be listed, the issuer has the ability to issue new Index-Linked Securities from time to time at the indicative value at the time of such sale. This provides a ready supply of new Index-Linked Securities, thereby lessening the possibility that the market price of such securities would be affected by a scarcity of available Index-Linked Securities for sale. The Exchange believes that it also assists in maintaining a strong correlation between the market price and the indicative value, as investors would be unlikely to pay more than the indicative value in the open market if they can acquire Index-Linked Securities from the issuer at that price.

The Exchange states that the ability to list Index-Linked Securities with these characteristics without any minimum number of units issued or holders is important to the successful listing of such securities. Issuers distributing these types of Index-Linked Securities generally do not intend to do so by way of an underwritten offering. Rather, the distribution arrangement is analogous to that of an exchange-traded fund issuance, in that the issue is launched without any significant distribution event, and the float increases over time as investors purchase additional securities from the issuer at the then indicative value. Investors would generally seek to purchase the securities at a point when the underlying index or asset is at a level that they perceive would provide an attractive growth opportunity. In the context of such a distribution arrangement, it is difficult for an issuer to guarantee its ability to sell a specific number of units on the listing date. However, the Exchange believes that this difficulty in ensuring the sale of one million units on the listing date is not indicative of a likely long-term lack of liquidity in the securities or, for the reasons set forth above, of a difficulty in establishing a pricing equilibrium in the securities or a successful two-sided market.

With respect to each issue of Index-Linked Securities, NYSE Arca Equities Rule 5.2(j)(1) generally requires a minimum principal amount/market value of $20 million. The Exchange proposes to amend NYSE Arca Equities Rule 5.2(j)(6)(a) to decrease the minimum principal amount/market value from $20 million to $4 million. The Exchange seeks to conform this minimum principal amount/market value requirement to similar initial listing requirements for Index-Linked Securities of other national securities exchanges.[5]

Finally, the Exchange proposes to make a non-substantive clarification to NYSE Arca Equities Rule 5.2(j)(6)(a) to replace the internal cross-reference to ''General Criteria'' with the reference to NYSE Arca Equities Rule 5.2(j)(1), which sets forth the general initial listing requirements for ''Other Securities,'' such as Index-Linked Securities.

2. Statutory Basis

The Exchange believes that the proposed rule change is consistent with Section 6(b) of the Act,[6] in general, and furthers the objectives of Section 6(b)(5) of the Act,[7] in particular, in that it is designed to prevent fraudulent and manipulative acts and practices, to promote just and equitable principles of trade, to foster cooperation and coordination with persons engaged in facilitating transactions in securities, to remove impediments to and perfect the mechanism of a free and open market and a national market system, and, in general, to protect investors and the public interest.

B. Self-Regulatory Organization's Statement on Burden on Competition

The Exchange does not believe that the proposed rule change will impose any burden on competition that is not necessary or appropriate in furtherance of the purposes of the Act.

C. Self-Regulatory Organization's Statement on Comments on the Proposed Rule Change Received From Members, Participants or Others

Written comments on the proposed rule change were neither solicited nor received.

III. Solicitation of Comments

Interested persons are invited to submit written data, views and arguments concerning the foregoing, including whether the proposed rule change is consistent with the Act. Comments may be submitted by any of the following methods:

Electronic Comments

- Use the Commission's Internet comment form (*http://www.sec.gov/rules/sro.shtml*); or
- Send e-mail to *rule-comments@sec.gov*. Please include File Number SR–NYSEArca–2007–96 on the subject line.

Paper Comments

- Send paper comments in triplicate to Nancy M. Morris, Secretary, Securities and Exchange Commission, 100 F Street, NE., Washington, DC, 20549–1090.

All submissions should refer to File Number SR–NYSEArca–2007–96. This file number should be included on the subject line if e-mail is used. To help the Commission process and review your comments more efficiently, please use only one method. The Commission will post all comments on the Commission's Internet Web site (*http://www.sec.gov/rules/sro.shtml*). Copies of the submission, all subsequent amendments, all written statements with respect to the proposed rule change that are filed with the Commission, and all written communications relating to the proposed rule change between the Commission and any person, other than those that may be withheld from the public in accordance with the provisions of 5 U.S.C. 552, will be available for inspection and copying in the Commission's Public Reference Room, 100 F Street, NE., Washington, DC 20549, on official business days between the hours of 10 a.m. and 3 p.m. Copies of such filing also will be available for inspection and copying at the principal office of the Exchange. All comments received will be posted without change; the Commission does not edit personal identifying information from submissions. You should submit only information that you wish to make available publicly. All submissions should refer to File number SR–NYSEArca–2007–96 and should be submitted on or before October 30, 2007.

IV. Commission's Findings and Order Granting Accelerated Approval of the Proposed Rule Change

After careful consideration, the Commission finds that the proposed rule change is consistent with the requirements of the Act and the rules and regulations thereunder applicable to

[5] *See, e.g.*, Section 703.22(B)(3) of the NYSE Listed Company Manual; Section 107(A)(c) of the American Stock Exchange LLC Company Guide; and Rule 4420(f)(1)(D) of The NASDAQ Stock Market LLC.

[6] 15 U.S.C. 78f(b).

[7] 15 U.S.C. 78f(b)(5).

a national securities exchange[8] and, in particular, the requirements of Section 6 of the Act.[9] Specifically, the Commission finds that the proposed rule change is consistent with Section 6(b)(5) of the Act,[10] which requires, among other things, that the rules of a national securities exchange be designed to promote just and equitable principles of trade, to foster cooperation and coordination with persons engaged in regulating, clearing, settling, processing information with respect to, and facilitating transactions in securities, to remove impediments to and perfect the mechanism of a free and open market and a national market system, and, in general, to protect investors and the public interest.

The Commission believes that the proposal should benefit investors by providing an exception to the minimum public distribution requirements for Index-Linked Securities with a weekly redemption right. The Commission believes that the market price of Index-Linked Securities with a weekly redemption right should exhibit a strong correlation to the performance of the relevant underlying index or asset, since holders of such securities would be unlikely to sell them for less than their redemption value if they have a weekly right to be redeemed for their full value. The Commission believes that this exception is reasonable and should allow for the listing and trading of certain Index-Linked Securities that would otherwise not be able to be listed and traded on the Exchange.

The Commission finds good cause for approving the proposed rule change prior to the 30th day after the date of publication of the notice of filing thereof in the **Federal Register** The Commission notes that it has approved a similar proposal filed by NYSE[11] and similar initial distribution requirements for Index-Linked Securities of other national securities exchanges[12] and does not believe that this proposal raises any novel regulatory issues. Accelerating approval of this proposal should benefit investors by creating, without undue delay, additional competition in the market for Index-Linked Securities. Therefore, the Commission finds good cause, consistent with Section 19(b)(2) of the Act,[13] to approve the proposed rule change on an accelerated basis.

V. Conclusion

It is therefore ordered, pursuant to Section 19(b)(2) of the Act,[14] that the proposed rule change (SR–NYSEArca–2007–96) be, and it hereby is, approved on an accelerated basis.

For the Commission, by the Division of Market Regulation, pursuant to delegated authority.[15]

Nancy M. Morris,

Secretary.

[FR Doc. E7–19764 Filed 10–5–07; 8:45 am]

BILLING CODE 8011–01–P

[8] In approving this proposed rule change, the Commission has considered the proposed rule's impact on efficiency, competition, and capital formation. *See* 15 U.S.C. 78c(f).

[9] 15 U.S.C. 78f.

[10] 15 U.S.C. 78f(b)(5).

[11] *See supra* note 4.

[12] *See supra* note 5.

[13] 15 U.S.C. 78s(b)(2).

[14] *Id.*

[15] 17 CFR 200.30–3(a)(12).

SECURITIES AND EXCHANGE COMMISSION

[Release No. 34–56592; File No. SR–Amex–2007–60]

Self-Regulatory Organizations; American Stock Exchange LLC; Order Granting Approval of a Proposed Rule Change, as Modified by Amendment Nos. 1 and 2 Thereto, Relating to the Listing and Trading of Shares of Eight Funds of the ProShares Trust Based on International Equity Indexes

October 1, 2007.

I. Introduction

On June 15, 2007, the American Stock Exchange, LLC (''Amex'' or ''Exchange'') filed with the Securities and Exchange Commission (''Commission''), pursuant to Section 19(b)(1) of the Securities Exchange Act of 1934 (''Act'')[1] and Rule 19b–4 thereunder, a proposal to list and trade the shares of eight funds of the ProShares Trust based on certain international equity indexes.[2] On July 27, 2007, Amex filed Amendment No. 1 to the proposed rule change. The proposed rule change, as amended, was published for comment in the **Federal Register** on August 15, 2007 for a 15-day comment period.[3] The Commission received no comments on the proposal. On September 7, 2007, Amex filed Amendment No. 2 to the proposed rule change.[4] This order approves the proposed rule change, as modified by Amendment Nos. 1 and 2 thereto.

II. Description of the Proposal

The Exchange proposes to list and trade under Amex Rule 1000A–AEMI the shares (the ''Shares'') of eight funds of the ProShares Trust (the ''Trust'') that are designated as Short Funds (the ''Short Funds'') and UltraShort Funds (the ''UltraShort Funds,'' and together with the Short Funds, collectively referred to as the ''Funds''). The Exchange represents that the Funds will comply with all applicable provisions of Amex Rules 1000A–AEMI and 1001A–1003A.[5] Each of the Funds has a distinct investment objective by attempting, on a daily basis, to correspond to a specified multiple of the inverse performance of a particular equity securities index. The Funds will be based on the following benchmark indexes: (1) MSCI Emerging Markets Index; (2) MSCI Japan Index; (3) MSCI EAFE Index; and (4) FTSE/Xinhua China 25 Index (each, an ''Underlying Index,'' and collectively, the ''Underlying Indexes'').[6] Each of the Underlying Indexes is rebalanced quarterly, calculated in U.S. dollars on a real-time basis, and, consistent with Commentary .02(b)(ii) to Amex Rule 1000A–AEMI, widely disseminated during Exchange trading hours.

Specifically, the Exchange proposes to list and trade Shares of the Short Funds that seek daily investment results, before fees and expenses, that correspond to the inverse or opposite of the daily performance (−100%) of the Underlying Indexes. If each of these Short Funds is successful in meeting its objective, the net asset value (''NAV'') of the Shares of each Short Fund should increase approximately as much, on a percentage basis, as the respective Underlying Index loses when the prices of the securities in the Underlying Index decline on a given day, or should decrease approximately as much, on a

[1] 15 U.S.C. 78s(b)(1).

[2] 17 CFR 240.19b–4.

[3] *See* Securities Exchange Act Release No. 56223 (August 8, 2007), 72 FR 45837 (''Notice'').

[4] In Amendment No. 2, the Exchange clarified that: (a) The value of the MSCI Japan Index will be calculated and disseminated every 15 seconds from 8 p.m. to 2 a.m. Eastern Time (''ET''); (b) the value of the MSCI EAFE Index will be calculated and disseminated every 60 seconds from 8 p.m. to 12 p.m. ET; (c) the value of the FTSE/Xinhua China 25 Index will be calculated and disseminated every 15 seconds from 10 p.m. to 4 a.m. ET; and (d) the Funds are expected to be highly inversely correlated (−0.95 or greater). Because Amendment No. 2 is technical in nature, the Commission is not republishing the notice of filing for public comment.

[5] E-mail from Nyieri Nazarian, Assistant General Counsel, Amex, to Edward Cho, Special Counsel, Division of Market Regulation, Commission, dated September 19, 2007.

[6] A detailed discussion of the Underlying Indexes and dissemination of the values thereof, investment objective of the Funds, portfolio investment methodology, investment techniques, availability of information and key values, creation and redemption of Shares, dividends and distributions, Amex's initial and continued listing standards, Amex trading rules and trading halts, information circular to Exchange members, and other related information regarding the Funds can be found in the Notice. *See* Notice, *supra* note 3.

percentage basis, as the respective Underlying Index gains when the prices of the securities in the Underlying Index rise on a given day, before fees and expenses.

The Exchange also proposes to list and trade Shares of the UltraShort Funds that seek daily investment results, before fees and expenses, that correspond to twice the inverse or opposite (−200%) of the daily performance of the Underlying Indexes. If each of these UltraShort Funds is successful in meeting its objective, the NAV of the Shares of each UltraShort Fund should increase approximately twice as much, on a percentage basis, as the respective Underlying Index loses when the prices of the securities in the Underlying Index decline on a given day, or should decrease approximately twice as much, on a percentage basis, as the respective Underlying Index gains when the prices of the securities in the Underlying Index rise on a given day, before fees and expenses.

III. Commission's Findings and Order Granting Approval of the Proposed Rule Change

After careful review, the Commission finds that the proposed rule change is consistent with the requirements of the Act and the rules and regulations thereunder applicable to a national securities exchange.[7] In particular, the Commission finds that the proposed rule change is consistent with Section 6(b)(5) of the Act,[8] which requires that an exchange have rules designed, among other things, to promote just and equitable principles of trade, to remove impediments to and perfect the mechanism of a free and open market and a national market system, and, in general, to protect investors and the public interest. The Commission notes that it previously approved the original listing and trading of certain inverse leveraged fund shares based on a variety of indexes.[9] The Commission also notes that it has previously approved the listing and trading of exchange-traded funds based on each of the Underlying Indexes.[10]

The Commission further believes that the proposal is consistent with Section 11A(a)(1)(C)(iii) of the Act,[11] which sets forth Congress's finding that it is in the public interest and appropriate for the protection of investors and the maintenance of fair and orderly markets to assure the availability to brokers, dealers, and investors of information with respect to quotations for and transactions in securities. Quotations and last-sale information for the Shares will be disseminated over the CT.[12] In addition, the Exchange will disseminate through the CT the IIV at least every 15 seconds throughout Amex's trading day, the market value of a Share for each Fund, the most recent NAV for each Fund, the number of Shares outstanding for each Fund, and the estimated cash amount and total cash amount per Creation Unit. The Exchange will also make available on its Web site daily trading volume, the closing prices, the NAV, and the final dividend amounts to be paid for each Fund. Furthermore, the value of each Underlying Index will be updated intra-day on a real-time basis as its individual component securities change in price and disseminated at least every 15 or 60 seconds, as applicable, throughout the trading day by Amex or another organization authorized by the relevant Underlying Index provider. The Trust's Web site will contain a variety of other quantitative information for the Shares of each Fund. Finally, each Fund's total portfolio composition will be disclosed on the Web site of the Trust or another relevant Web site as determined by the Trust and/or the Exchange. Web site disclosure of portfolio holdings will be made daily and will include, as applicable, the specific types of Financial Instruments and characteristics of such Financial Instruments and the cash equivalents and amount of cash held in the portfolio of each Fund.

Furthermore, the Commission believes that the proposal to list and trade the Shares is reasonably designed to promote fair disclosure of information that may be necessary to price the Shares appropriately and to prevent trading when a reasonable degree of transparency cannot be assured. The Commission notes that the Exchange will obtain a representation from the Trust (for each Fund), prior to listing, that the NAV per Share for each Fund will be calculated daily and made available to all market participants at the same time.[13] In addition, the Exchange represents that the Web site disclosure of the portfolio composition of each Fund and the disclosure by the Advisor of the IIV File and the PCF will occur at the same time. Commentary .02(b) to Amex Rule 1000A–AEMI provides for ''fire wall'' procedures with respect to personnel who have access to information concerning changes and adjustments to the Underlying Index and the implementation of procedures to prevent the use and dissemination of material non-public information regarding the Underlying Index. Commentary .09 to Amex Rule 1000A–AEMI restricts members or persons associated with members who have knowledge of all material terms and conditions of an order being facilitated or orders being crossed to enter, based on such knowledge, an order to buy or sell a Share that is the subject of the order, an order to buy or sell the overlying option class, or an order to buy or sell any related instrument[14] until all the terms of the order are disclosed to the trading crowd or the trade is no longer imminent in view of the passage of time since the order was received.

The Commission also believes that the Exchange's trading halt rules are reasonably designed to prevent trading in the Shares when transparency is impaired. Amex Rule 1002A(b)(ii) provides that the Exchange will halt

[7] In approving this proposed rule change, the Commission notes that it has considered the proposed rule's impact on efficiency, competition, and capital formation. *See* 15 U.S.C. 78c(f).

[8] 15 U.S.C. 78f(b)(5).

[9] *See* Securities Exchange Act Release Nos. 55117 (January 17, 2007), 72 FR 3442 (January 25, 2007) (SR–Amex–2006–101) (approving the listing and trading of shares of short and ultrashort funds, among others, of the Trust based on certain underlying indexes); 54040 (June 23, 2006), 71 FR 37629 (June 30, 2006) (SR–Amex–2006–41) (approving the listing and trading of shares of bearish funds, among others, of the Trust based on certain underlying indexes); and 52553 (October 3, 2005), 70 FR 59100 (October 11, 2005) (SR–Amex–2004–62) (approving the listing and trading of shares of bearish funds, among others, of the xtraShares Trust based on certain underlying indexes).

[10] *See* Securities Exchange Act Release Nos. 44990 (October 25, 2001), 66 FR 55712 (November 2, 2001) (SR–Amex–2001–45) (approving the listing and trading of shares of funds of iShares, Inc. based on certain foreign stock indexes, including the MSCI Emerging Markets (Free) Index); 36947 (March 8, 1996), 61 FR 10606 (March 14, 1996) (SR–Amex–95–43) (approving the listing and trading of Index Fund Shares based on the MSCI Japan Index, among other indexes); 44700 (August 14, 2001), 66 FR 43927 (August 21, 2001) (SR–Amex–2001–34) (approving the listing and trading of shares of a fund based on the MSCI EAFE Index, among other indexes); 50505 (October 8, 2004), 69 FR 61280 (October 15, 2004) (SR–NYSE–2004–55) (approving the listing and trading of shares of the iShares FTSE/Xinhua China 25 Index Fund); and 50800 (December 6, 2004), 69 FR 72228 (December 13, 2004) (SR–Amex–2004–85) (approving the trading of shares of the iShares FTSE/Xinhua China 25 Index Fund pursuant to unlisted trading privileges).

[11] 15 U.S.C. 78k–1(a)(1)(C)(iii).

[12] E-mail from Nyieri Nazarian, Assistant General Counsel, Amex, to Edward Cho, Special Counsel, Division of Market Regulation, Commission, dated August 21, 2007 (clarifying the information to be disseminated through the CT). Capitalized terms used but not otherwise defined herein shall have the meanings ascribed to such terms in the Notice. *See* Notice, *supra* note 3.

[13] *See* Amex Rule 1002A(a)(ii).

[14] For purposes of Commentary .09, an order to buy or sell a ''related instrument'' means an order to buy or sell securities comprising ten percent or more of the component securities in the Underlying Index or an order to buy or sell a futures contract on any economically equivalent index. *See* Commentary .09 to Amex Rule 1000A–AEMI.

trading in the Shares if the circuit breaker parameters of Amex Rule 117 have been reached. In exercising its discretion to halt or suspend trading in the Shares, the Exchange may consider factors such as those set forth in Amex Rule 918C(b) and other relevant factors. In addition, Amex Rule 1002A(b)(ii) provides that, if the IIV or the Underlying Index value applicable to that series of Index Fund Shares is not being disseminated as required, the Exchange may halt trading during the day in which the interruption to the dissemination of the IIV or the Underlying Index value occurs. If the interruption to the dissemination of the IIV or the Underlying Index value persists past the trading day in which it occurred, the Exchange will halt trading no later than the beginning of the trading day following the interruption.

The Commission further believes that the trading rules and procedures to which the Shares will be subject pursuant to this proposal are consistent with the Act. The Exchange has represented that the Shares are equity securities subject to Amex's rules governing the trading of equity securities.

In support of this proposal, the Exchange has made the following representations:

(1) The Exchange's surveillance procedures are adequate to properly monitor the trading of the Shares. Specifically, Amex will rely on its existing surveillance procedures governing Index Fund Shares.

(2) Prior to the commencement of trading, the Exchange will inform its members and member organizations in an Information Circular regarding the application of Commentary .06 to Amex Rule 1000A–AEMI to the Funds and the prospectus and/or product description delivery requirements that apply to the Funds. The Information Circular will also provide guidance with regard to member firm compliance responsibilities when effecting transactions in the Shares and highlighting the special risks and characteristics of the Funds and Shares, as well as applicable Exchange rules. In addition, the Information Circular will disclose that the procedures for purchases and redemptions of Shares in Creation Units are described in each Fund's prospectus, and that Shares are not individually redeemable, but are redeemable only in Creation Unit aggregations or multiples thereof.

(3) The Exchange represents that the Trust is required to comply with Rule 10A–3 under the Act [15] for the initial and continued listing of the Shares.

This approval order is based on the Exchange's representations.

IV. Conclusion

It is therefore ordered, pursuant to Section 19(b)(2) of the Act,[16] that the proposed rule change (SR–Amex–2007–60), as modified by Amendment Nos. 1 and 2 thereto, be, and it hereby is, approved.

For the Commission, by the Division of Market Regulation, pursuant to delegated authority.[17]

Nancy M. Morris,

Secretary.

[FR Doc. E7–19752 Filed 10–5–07; 8:45 am]

BILLING CODE 8011–01–P

SECURITIES AND EXCHANGE COMMISSION

[Release No. 34–56588; File No. SR–NYSE–2007–92]

Self-Regulatory Organizations; New York Stock Exchange, LLC; Notice of Filing and Immediate Effectiveness of Proposed Rule Change Relating to NYSE Rules 104(b) and 123D

October 1, 2007.

Pursuant to Section 19(b)(1) of the Securities Exchange Act of 1934 (''Act'') [1] and Rule 19b–4 thereunder,[2] notice is hereby given that on September 28, 2007, the New York Stock Exchange, LLC (''NYSE'' or ''Exchange'') filed with the Securities and Exchange Commission (''Commission'') the proposed rule change as described in Items I and II below, which Items have been substantially prepared by the NYSE. The Exchange filed the proposal pursuant to Section 19(b)(3)(A) of the Act [3] and Rule 19b–4(f)(6) thereunder,[4] which renders the proposal effective upon filing with the Commission. The Commission is publishing this notice to solicit comments on the proposed rule change from interested persons.

I. Self-Regulatory Organization's Statement of the Terms of Substance of the Proposed Rule Change

The NYSE proposes to amend its Rule 104(b) to provide for an automated opening message that will be effectuated through the Specialist Application Programmed Interface (''SAPI''), to allow specialists to open a security on a quote. Additionally, the Exchange seeks to amend its Rule 123D (Openings and Halts in Trading) to clarify that specialists may open a security on a trade or a quote. The text of the proposed rule change is available at the Exchange, on the Exchange's Web site at *http://www.nyse.com,* and at the Commission's Public Reference Room.

II. Self-Regulatory Organization's Statement of the Purpose of, and Statutory Basis for, the Proposed Rule Change

In its filing with the Commission, the Exchange included statements concerning the purpose of, and basis for, the proposed rule change and discussed any comments it received on the proposed rule change. The text of these statements may be examined at the places specified in Item IV below. The Exchange has prepared summaries, set forth in Sections A, B, and C below, of the most significant aspects of such statements.

A. Self-Regulatory Organization's Statement of the Purpose of, and Statutory Basis for, the Proposed Rule Change

1. Purpose

The Exchange is filing this proposed rule change to amend its Rules 104(b) and 123D to allow specialists to open a security on a quote by sending a message from the SAPI to the NYSE Display Book® system for publication of a quote when there is no opening trade.[5] The proposed rule change merely provides the specialist with the ability to electronically open a security on a quote, which currently may be accomplished manually.

Proposed Rule 104(b)

The Exchange seeks to add this electronic opening quote message provision to Exchange Rule 104(b), which includes other SAPI trading and quoting messages. The Exchange believes that, with increased automation of trading, specialists should be able to perform their trading and quoting functions both electronically and manually. To do otherwise would unnecessarily limit their effectiveness in

---

[15] 17 CFR 240.10A–3.

[16] 15 U.S.C. 78s(b)(2).

[17] 17 CFR 200.30–3(a)(12).

[1] 15 U.S.C. 78s(b)(1).

[2] 17 CFR 240.19b–4.

[3] 15 U.S.C. 78s(b)(3)(A).

[4] 17 CFR 240.19b–4(f)(6).

[5] The Display Book® system is an order management and execution facility. The Display Book system receives and displays orders to the specialists, contains the Book, and provides a mechanism to execute and report transactions and publish the results to the Consolidated Tape. The Display Book system is connected to a number of other Exchange systems for the purposes of comparison, surveillance, and reporting information to customers and other market data and national market systems.

the market and disadvantage investors. The proposed Rule 104(b) provision refers to proposed Rule 123D, which clarifies that a specialist is permitted to open a security in which he or she is registered on either a trade or a quote.

Rule 123D: Specialist Obligations at the Opening

The provisions of Exchange Rule 123D require a specialist to open the securities in which he or she is registered. According to Rule 123D, specialists must, among other things, do the following when opening and reopening their assigned securities:

- Open a registered security as close to the opening bell as possible;
- Open securities in a timely, fair and orderly manner; and
- Provide timely and impartial information at all phases of the opening process.

The proposed rule change will codify the practice of the specialist in the opening process, which is that the specialist may open an assigned security on a trade or on a quote. The specialist may open a security on a quote when there is no trade upon which to open. The practice has been and will remain that if a specialist opens a security on a quote, he or she must provide the highest bid price and lowest offer price available to them.[6] The proposed amendment to Rule 123D refers to the proposed amendment of Rule 104(b) as described above.

Delayed or Untimely Openings

Specialists' delayed or untimely openings of securities potentially disadvantage market participants, as investors are unable to trade such securities at the NYSE until the security is opened. The ability to open a security on a quote via an automated quoting message will enable the specialist to open their assigned securities in a timely manner, thereby providing investors with access to the NYSE market as close to 9:30 a.m. as possible. Opening securities in a timely, fair and orderly manner is consistent with the specialist's obligations under Exchange Rules 123D and 104. Therefore, the Exchange believes it is imperative to provide the specialist with an automated message that will assist the specialist in opening their assigned securities on a quote. Through this rule filing, the Exchange is merely seeking to automate an approved specialist function that is presently performed manually.

When a specialist on the NYSE fails to timely open a security that also trades on other exchanges, the investor will generally trade that particular security on other exchanges so as not to miss the market. As a consequence of late openings, the NYSE could lose market volume and market data revenue.

2. Statutory Basis

The Exchange believes that the proposed rule change is consistent with Section 6(b)(5) of the Act[7] in that it is designed to promote just and equitable principles of trade, to foster cooperation and coordination with persons engaged in regulating, clearing, settling, processing information with respect to, and facilitating transactions in securities, to remove impediments to and perfect the mechanism of a free and open market and a national market system and, in general, to protect investors and the public interest. The Exchange also believes that the proposed rule change is designed to support the principles of Section 11A(a)(1) of the Act[8] in that it seeks to assure economically efficient execution of securities transactions by making it easier for specialists to open securities in which they are registered on a quote in a timely fashion by providing an automated quoting message that is effectuated through the SAPI.

B. Self-Regulatory Organization's Statement on Burden on Competition

The Exchange does not believe that the proposed rule change will impose any burden on competition that is not necessary or appropriate in furtherance of the purposes of the Act.

C. Self-Regulatory Organization's Statement on Comments on the Proposed Rule Change Received From Members, Participants or Others

The Exchange has neither solicited nor received written comments on the proposed rule change.

III. Date of Effectiveness of the Proposed Rule Change and Timing for Commission Action

Because the forgoing rule change does not: (1) Significantly affect the protection of investors or the public interest; (2) impose any significant burden on competition; and (3) become operative for 30 days after the date of this filing, or such shorter time as the Commission may designate, it has become effective pursuant to Section 19(b)(3)(A) of the Act and Rule 19b–4(f)(6) thereunder.[9]

A proposed rule change filed under 19b–4(f)(6) normally may not become operative prior to 30 days after the date of filing. However, Rule 19b–4(f)(6)(iii) permits the Commission to designate a shorter time if such action is consistent with the protection of investors and the public interest. The Exchange has requested that the Commission waive the 30-day operative delay. The Commission believes that waiving the 30-day operative delay is consistent with the protection of investors and the public interest because it should assist the specialist in its ability to open securities in a timely, fair, and orderly manner. The Commission notes that the Exchange has represented that this proposal would merely automate the ability that specialists currently have to manually open trading in a security on a quote when there is no opening trade. For these reasons, the Commission designates the proposed rule change to be effective and operative upon filing with the Commission.[10]

At any time within 60 days of the filing of such proposed rule change the Commission may summarily abrogate such rule change if it appears to the Commission that such action is necessary or appropriate in the public interest, for the protection of investors or otherwise in furtherance of the purposes of the Act.

IV. Solicitation of Comments

Interested persons are invited to submit written data, views, and arguments concerning the foregoing, including whether the proposed rule change is consistent with the Act. Comments may be submitted by any of the following methods:

Electronic Comments

- Use the Commission's Internet comment form (*http://www.sec.gov/rules/sro.shtml*); or
- Send an e-mail to *rule-comments@sec.gov.* Please include File Number SR–NYSE–2007–92 on the subject line.

[6] The specialist must also be guided by Exchange Rules 79A.30 (one or two points or more away from the last sale) and 115A (Orders at Openings or in Unusual Situations) when opening and reopening securities.

[7] 15 U.S.C. 78(f)(b)(5).

[8] 15 U.S.C. 78k–1(a)(1).

[9] In addition, Rule 19b–4(f)(6) requires a self-regulatory organization to give the Commission written notice of its intent to file the proposed rule change, along with a brief description and text of the proposed rule change, at least five business days prior to the date of filing of the proposed rule change, or such shorter time as designated by the Commission. The NYSE has satisfied this requirement.

[10] For the purposes only of waiving the 30-day operative delay, the Commission has considered the proposed rule's impact on efficiency, competition, and capital formation. *See* 15 U.S.C. 78c(f).

Paper Comments

• Send paper comments in triplicate to Nancy M. Morris, Secretary, Securities and Exchange Commission, 100 F Street, NE., Washington, DC 20549–1090.

All submissions should refer to File Number SR–NYSE–2007–92. This file number should be included on the subject line if e-mail is used. To help the Commission process and review your comments more efficiently, please use only one method. The Commission will post all comments on the Commission's Internet Web site (*http://www.sec.gov/rules/sro.shtml*). Copies of the submission, all subsequent amendments, all written statements with respect to the proposed rule change that are filed with the Commission, and all written communications relating to the proposed rule change between the Commission and any person, other than those that may be withheld from the public in accordance with the provisions of 5 U.S.C. 552, will be available for inspection and copying in the Commission's Public Reference Room. Copies of the filing also will be available for inspection and copying at the principal office of the Exchange. All comments received will be posted without change; the Commission does not edit personal identifying information from submissions. You should submit only information that you wish to make available publicly. All submissions should refer to File Number SR–NYSE–2007–92 and should be submitted on or before October 30, 2007.

For the Commission, by the Division of Market Regulation, pursuant to delegated authority.[11]

Nancy M. Morris,

Secretary.

[FR Doc. E7–19748 Filed 10–5–07; 8:45 am]

BILLING CODE 8011–01–P

[11] 17 CFR 200.30–3(a)(12).

SECURITIES AND EXCHANGE COMMISSION

[Release No. 34–56589; File No. SR–NYSE–2007–85]

Self-Regulatory Organizations; New York Stock Exchange LLC; Notice of Filing and Immediate Effectiveness of a Proposed Rule Change Relating to Temporary Waiver of the Specialist Marketing and Investor Education Fee for Specialists in Certain Listed Investment Company Units

October 1, 2007.

Pursuant to Section 19(b)(1) of the Securities Exchange Act of 1934 (''Act'')[1] and Rule 19b–4 thereunder,[2] notice is hereby given that on September 25, 2007, the New York Stock Exchange LLC (''NYSE'' or ''Exchange'') filed with the Securities and Exchange Commission (''Commission'') the proposed rule change as described in Items I and II below, which Items have been substantially prepared by the Exchange. The Exchange has designated this proposal as one establishing or changing a due, fee, or other charge imposed by NYSE under Section 19(b)(3)(A)(ii) of the Act[3] and Rule 19b–4(f)(2) thereunder,[4] which renders the proposal effective upon filing with the Commission. The Commission is publishing this notice to solicit comments on the proposed rule change from interested persons.

I. Self-Regulatory Organization's Statement of the Terms of Substance of the Proposed Rule Change

The Exchange proposes, for the period from August 1, 2007 to December 1, 2007, to waive the Specialist Marketing and Investor Education Fee (''Fee'') for those specialists in listed Investment Company Units (''ICUs'') otherwise subject to such fee that have been reallocated following the previous specialist's withdrawal from registration as specialist in such ICUs.

II. Self-Regulatory Organization's Statement of the Purpose of, and Statutory Basis for, the Proposed Rule Change

In its filing with the Commission, the Exchange included statements concerning the purpose of, and basis for, the proposed rule change and discussed any comments it received on the proposed rule change. The text of these statements may be examined at the places specified in Item IV below. NYSE has substantially prepared summaries, set forth in Sections A, B, and C below, of the most significant aspects of such statements.

A. Self-Regulatory Organization's Statement of the Purpose of, and Statutory Basis for, the Proposed Rule Change

1. Purpose

The Exchange currently imposes the Fee on Exchange specialists in ICUs in circumstances where the Exchange undertakes to provide funds to a third party for marketing and investor education in connection with the listing of those ICUs (also known as exchange traded funds).[5] The Exchange states that the fee is imposed in a fair and equitable manner on all specialists trading the securities subject to a third party fee or payment.

The amount paid by the specialists is calculated and apportioned following each calendar quarter among the specialist units allocated ICUs that are subject to an Exchange payment to third parties. This amount represents five-sixths (83.33%) of the annual amount payable by the Exchange, as apportioned for the quarter. Such amount is apportioned to specialist units for each ICU that is subject to the Fee, calculated based on the ''Notional NYSE ADV'' for each relevant ICU. Notional NYSE ADV is defined as the average daily share volume on the NYSE for the calendar quarter for the particular ICU multiplied by the average consolidated closing price for the quarter for such ICU.

One of the specialist units previously registered in a number of the ICUs subject to the Fee notified the Exchange in July 2007 of its intention to withdraw from registration as specialist from the Exchange in all listed products. As a result, the Exchange was required to reallocate these ICUs to other specialist units within a short time frame following notification by the previous specialist unit. This reallocation was accomplished on August 1, 2007. Under these circumstances, given that the specialist firms, to which the ICUs were reallocated on short notice, were not able to anticipate or budget for the expense, the Exchange considered it necessary, appropriate, and equitable to waive the Fee with respect to such reallocated ICUs for the period August 1, 2007 to December 1, 2007.

[1] 15 U.S.C. 78s(b)(1).

[2] 17 CFR 240.19b–4.

[3] 15 U.S.C. 78s(b)(3)(A)(ii).

[4] 17 CFR 240.19b–4(f)(2).

[5] *See* Securities Exchange Act Release No. 51872 (June 17, 2005), 70 FR 36683 (June 24, 2005) (SR–NYSE–2005–42).

2. Statutory Basis

The Exchange believes that the proposed rule change is consistent with Section 6(b) of the Act,[6] in general, and furthers the objectives of Section 6(b)(4) of the Act,[7] in particular, in that it is designed to provide for the equitable allocation of reasonable dues, fees, and other charges among Exchange members, issuers, and other persons using the facilities of the Exchange.

B. Self-Regulatory Organization's Statement on Burden on Competition

The Exchange does not believe that the proposed rule change would impose any burden on competition that is not necessary or appropriate in furtherance of the purposes of the Act.

C. Self-Regulatory Organization's Statement on Comments on the Proposed Rule Change Received From Members, Participants, or Others

The Exchange has neither solicited nor received written comments on the proposed rule change.

III. Date of Effectiveness of the Proposed Rule Change and Timing for Commission Action

The foregoing proposed rule change has been designated as a fee change pursuant to Section 19(b)(3)(A)(ii) of the Act[8] and Rule 19b–4(f)(2)[9] thereunder, because it establishes or changes a due, fee, or other charge imposed by the Exchange. Accordingly, the proposal will take effect upon filing with the Commission. At any time within 60 days of the filing of the proposed rule change, the Commission may summarily abrogate such rule change if it appears to the Commission that such action is necessary or appropriate in the public interest, for the protection of investors, or otherwise in the furtherance of the purposes of the Act.

IV. Solicitation of Comments

Interested persons are invited to submit written data, views, and arguments concerning the foregoing, including whether the proposed rule change is consistent with the Act. Comments may be submitted by any of the following methods:

Electronic Comments

- Use the Commission's Internet comment form (*http://www.sec.gov/rules/sro.shtml*); or
- Send an e-mail to *rule-comments@sec.gov*. Please include File Number SR–NYSE–2007–85 on the subject line.

Paper Comments

- Send paper comments in triplicate to Nancy M. Morris, Secretary, Securities and Exchange Commission, 100 F Street, NE., Washington, DC 20549–1090.

All submissions should refer to File Number SR–NYSE–2007–85. This file number should be included on the subject line if e-mail is used. To help the Commission process and review your comments more efficiently, please use only one method. The Commission will post all comments on the Commission's Internet Web site (*http://www.sec.gov/rules/sro.shtml*). Copies of the submission, all subsequent amendments, all written statements with respect to the proposed rule change that are filed with the Commission, and all written communications relating to the proposed rule change between the Commission and any person, other than those that may be withheld from the public in accordance with the provisions of 5 U.S.C. 552, will be available for inspection and copying in the Commission's Public Reference Room, 100 F Street, NE., Washington, DC 20549, on official business days between the hours of 10 a.m. and 3 p.m. Copies of such filing also will be available for inspection and copying at the principal office of the Exchange. All comments received will be posted without change; the Commission does not edit personal identifying information from submissions. You should submit only information that you wish to make available publicly. All submissions should refer to File Number SR–NYSE–2007–85 and should be submitted on or before October 30, 2007.

For the Commission, by the Division of Market Regulation, pursuant to delegated authority.[10]

Nancy M. Morris,

Secretary.

[FR Doc. E7–19749 Filed 10–5–07; 8:45 am]

BILLING CODE 8011–01–P

[6] 15 U.S.C. 78f(b).

[7] 15 U.S.C. 78f(b)(4).

[8] 15 U.S.C. 78s(b)(3)(A)(ii).

[9] 17 CFR 240.19b–4(f)(2).

[10] 17 CFR 200.30–3(a)(12).

SECURITIES AND EXCHANGE COMMISSION

[Release No. 34–56590; File No. SR–NYSE–2007–88]

Self-Regulatory Organizations; New York Stock Exchange LLC; Notice of Filing and Immediate Effectiveness of Proposed Rule Change To Modify the Exchange's Transaction Fees and Certain Trading Floor Fees

October 1, 2007.

Pursuant to Section 19(b)(1) of the Securities Exchange Act of 1934 (''Act''),[1] and Rule 19b–4 thereunder,[2] notice is hereby given that on September 27, 2007, the New York Stock Exchange LLC (''Exchange'' or ''NYSE'') filed with the Securities and Exchange Commission (''Commission'') the proposed rule change as described in Items I, II, and III below, which Items have been substantially prepared by the Exchange. The Commission is publishing this notice to solicit comments on the proposed rule change from interested persons.

I. Self-Regulatory Organization's Statement of the Terms of Substance of the Proposed Rule Change

NYSE proposes to amend its equity transaction fees, effective October 1, 2007. Member Organizations will no longer be charged a fee: (i) If they are posting liquidity on the NYSE and the applicable order is executed against an inbound order; (ii) for non-electronic agency transactions of at least 10,000 shares between floor brokers in the crowd; and (iii) for agency cross transactions of at least 10,000 shares. Member Organizations will be charged $.0008 per share when an executed order takes liquidity from the NYSE. Member organizations will be charged $.0004 per share (on both sides of the transaction) on: (i) Odd lot transactions (including the odd lot portion of partial round lots); (ii) at the opening and at the opening only orders; (iii) market at-the-close and limit at-the-close orders; and (iv) non-electronic agency transactions of less than 10,000 shares between floor brokers in the crowd. Equity transaction fees will be capped at $120 per transaction side. The Exchange is also changing its routing fee from $.0025 per share to $.0030 per share. In addition, the routing fee will now apply to transactions where the related order is placed by a broker on the Exchange trading floor. Finally, the Exchange is eliminating its broker booth fees and the $11,000 per license trading floor

[1] 15 U.S.C. 78s(b)(1).

[2] 17 CFR 240.19b–4.

regulatory fee charged to non-specialist Member Organizations. The text of the proposed rule change is available at NYSE, the Commission's Public Reference Room, and *http://www.nyse.com.*

II. Self-Regulatory Organization's Statement of the Purpose of, and Statutory Basis for, the Proposed Rule Change

In its filing with the Commission, the Exchange included statements concerning the purpose of, and basis for, the proposed rule change. The text of these statements may be examined at the places specified in Item IV below. The Exchange has prepared summaries, set forth in Sections A, B, and C below, of the most significant aspects of such statements.

A. Self-Regulatory Organization's Statement of the Purpose of, and Statutory Basis for, the Proposed Rule Change

1. Purpose

The Exchange proposes to amend its equity transaction fees, effective October 1, 2007. Member Organizations are currently charged a transaction fee of $.000275 per share on all equity transactions whether they are providing or taking liquidity. Under the proposed amendment, Member Organizations will no longer be charged a fee: (i) If they are posting liquidity [3] on the NYSE and the applicable order is executed against an inbound order; (ii) for non-electronic agency transactions of at least 10,000 shares between floor brokers in the crowd; and (iii) for agency cross transactions of at least 10,000 shares, *i.e.*, a trade where a Member Organization has customer orders to buy and sell an equivalent amount of the same security. Member Organizations will be charged $.0008 per share when an executed order takes liquidity from the NYSE. Member organizations will be charged $.0004 per share (on both sides of the transaction) on: (i) Odd lot transactions (including the odd lot portion of partial round lots); (ii) at the opening and at the opening only orders; (iii) market at-the-close and limit at-the-close orders; and (iv) non-electronic agency transactions of less than 10,000 shares between floor brokers in the crowd.

Equity transaction fees will be capped at $120 per side on all equity transactions.[4]

The Exchange is also changing its routing fee (the fee it charges Member Organizations for transactions required under Regulation NMS to be routed to other markets) from $.0025 per share to $.0030 per share. The revised routing fee more closely corresponds to the actual costs the Exchange incurs in paying transaction fees to the other markets to which it routes orders. In addition, the routing fee will now apply to transactions where the related order is placed by a broker on the Exchange trading floor. The routing fee is not subject to the $120 fee cap per equity transaction.

The Exchange's transaction fees and routing fee for Exchange-Traded Fund securities remain unchanged.

The Exchange is also eliminating its booth fees [5] and the $11,000 per license annual trading floor regulatory fee charged to non-specialist Member Organizations.[6]

2. Statutory Basis

The Exchange believes that the proposed rule change is consistent with the objectives of Section 6 of the Act [7] in general and furthers the objectives of Section 6(b)(4) of the Act [8] in particular, in that it is designed to provide for the equitable allocation of reasonable dues, fees, and other charges among its members and other persons using its facilities.

B. Self-Regulatory Organization's Statement on Burden on Competition

The Exchange does not believe that the proposed rule change will impose any burden on competition that is not necessary or appropriate in furtherance of the purposes of the Act.

C. Self-Regulatory Organization's Statement on Comments on the Proposed Rule Change Received From Members, Participants or Others

Written comments were neither solicited nor received.

III. Date of Effectiveness of the Proposed Rule Change and Timing for Commission Action

The foregoing proposed rule change has become effective upon filing pursuant to Section 19(b)(3)(A) of the Act [9] and Rule 19b–4(f)(2) [10] thereunder, because it establishes or changes a due, fee, or other charge imposed by the Exchange.

At any time within 60 days of the filing of the proposed rule change, the Commission may summarily abrogate such rule change if it appears to the Commission that such action is necessary or appropriate in the public interest, for the protection of investors, or otherwise in furtherance of the purposes of the Act.

IV. Solicitation of Comments

Interested persons are invited to submit written data, views, and arguments concerning the foregoing, including whether the proposed rule change is consistent with the Act. Comments may be submitted by any of the following methods:

Electronic Comments

- Use the Commission's Internet comment form (*http://www.sec.gov/rules/sro.shtml*); or
- Send an e-mail to *rule-comments@sec.gov.* Please include File Number SR–NYSE–2007–88 on the subject line.

Paper Comments

- Send paper comments in triplicate to Nancy M. Morris, Secretary, Securities and Exchange Commission, 100 F Street, NE., Washington, DC 20549–1090.

All submissions should refer to File Number SR–NYSE–2007–88. This file number should be included on the subject line if e-mail is used. To help the Commission process and review your comments more efficiently, please use only one method. The Commission will post all comments on the Commissions Internet Web site (*http://www.sec.gov/rules/sro.shtml*). Copies of the submission, all subsequent amendments, all written statements with respect to the proposed rule change that are filed with the Commission, and all written communications relating to the proposed rule change between the Commission and any person, other than those that may be withheld from the public in accordance with the provisions of 5 U.S.C. 552, will be available for inspection and copying in the Commission's Public Reference Room, 100 F Street, NE., Washington, DC 20549, on official business days between the hours of 10 a.m. and 3 p.m. Copies of such filing also will be available for inspection and copying at the principal office of the NYSE. All comments received will be posted without change; the Commission does not edit personal identifying

[3] Including Percentage Orders (more commonly known as ''CAP orders''), as defined in Exchange Rule 13.

[4] Equity transaction fees are currently capped at $80 per side on all equity transactions.

[5] Annual booth fees are currently $7,800 for the Blue Room and Extended Blue Room, $6,000 for the Main Room and Garage, and $2,400 for the QT Room (Post Trade Processing Center).

[6] The trading floor regulatory fee is subject to a $50,000 maximum per annum per Member Organization.

[7] 15 U.S.C. 78f.

[8] 15 U.S.C. 78f(b)(4).

[9] 15 U.S.C. 78s(b)(3)(A).

[10] 17 CFR 19b–4(f)(2).

information from submissions. You should submit only information that you wish to make available publicly. All submissions should refer to File Number SR–NYSE–2007–88 and should be submitted on or before October 30, 2007.

For the Commission, by the Division of Market Regulation, pursuant to delegated authority.[11]

Nancy M. Morris,

Secretary.

[FR Doc. E7–19750 Filed 10–5–07; 8:45 am]

BILLING CODE 8011–01–P

SECURITIES AND EXCHANGE COMMISSION

[Release No. 34–56591; File No. SR–NYSE–2007–89]

Self-Regulatory Organizations; New York Stock Exchange LLC; Notice of Filing and Immediate Effectiveness of Proposed Rule Change To Institute a Revised System of Payments to Specialist Firms

October 1, 2007.

Pursuant to Section 19(b)(1) of the Securities Exchange Act of 1934 (''Act''),[1] and Rule 19b–4 thereunder,[2] notice is hereby given that on September 27, 2007, the New York Stock Exchange LLC (''Exchange'' or ''NYSE'') filed with the Securities and Exchange Commission (''Commission'') the proposed rule change as described in Items I, II, and III below, which Items have been substantially prepared by the Exchange. The Commission is publishing this notice to solicit comments on the proposed rule change from interested persons.

I. Self-Regulatory Organization's Statement of the Terms of Substance of the Proposed Rule Change

NYSE proposes to amend its system of variable payments to specialist firms for liquidity provision (''Liquidity Provision Payments'' or ''LPPs''). For each of the three months in the three-month period commencing October 1, 2007, 20% of Exchange transaction fee revenues will be allocated to the Liquidity Provision Payment pool. In January 2008, and each month thereafter, the percentage allocated will be 17%. The text of the proposed rule change is available at NYSE, the Commission's Public Reference Room, and *http://www.nyse.com.*

II. Self-Regulatory Organization's Statement of the Purpose of, and Statutory Basis for, the Proposed Rule Change

In its filing with the Commission, the Exchange included statements concerning the purpose of, and basis for, the proposed rule change. The text of these statements may be examined at the places specified in Item IV below. The Exchange has prepared summaries, set forth in Sections A, B, and C below, of the most significant aspects of such statements.

A. Self-Regulatory Organization's Statement of the Purpose of, and Statutory Basis for, the Proposed Rule Change

1. Purpose

On September 1, 2007, the Exchange instituted a program to provide variable Liquidity Provision Payments to specialist firms.[3]

Liquidity Provision Payments are based on two revenue sources in NYSE-listed securities (excluding exchange traded funds): (1) The Exchange's share of market data revenue derived from quoting share; and (2) the Exchange's transaction fee revenue.

Under the transaction fee revenue portion of the LPPs, the Exchange distributes among the specialists each month a payment pool consisting of the Exchange's NYSE-listed stock transaction revenue on matched volume (excluding crossing services) in both electronic and manually executed transactions. The pool size was initially set at 25% of the above-noted Exchange transaction revenue and the Exchange noted in the Initial LPP Filing that this percentage may change if the Exchange adjusts its pricing and/or based on other conditions such as specialist performance. The Exchange proposes to reset at 20% the percentage of Exchange transaction fee revenue allocated to the LPP payment pool for each of the three months in the three-month period commencing October 1, 2007. In January 2008, and each month thereafter, the percentage allocated will be 17%.

2. Statutory Basis

The Exchange believes that the proposed rule change is consistent with the objectives of Section 6 of the Act[4] in general and furthers the objectives of Section 6(b)(4) of the Act[5] in particular, in that it is designed to provide for the equitable allocation of reasonable dues, fees, and other charges among its members and other persons using its facilities.

B. Self-Regulatory Organization's Statement on Burden on Competition

The Exchange does not believe that the proposed rule change will impose any burden on competition that is not necessary or appropriate in furtherance of the purposes of the Act.

C. Self-Regulatory Organization's Statement on Comments on the Proposed Rule Change Received From Members, Participants or Others

Written comments were neither solicited nor received.

III. Date of Effectiveness of the Proposed Rule Change and Timing for Commission Action

The foregoing proposed rule change has become effective upon filing pursuant to Section 19(b)(3)(A) of the Act[6] and Rule 19b–4(f)(2)[7] thereunder, because it establishes or changes a due, fee, or other charge imposed by the Exchange.

At any time within 60 days of the filing of the proposed rule change, the Commission may summarily abrogate such rule change if it appears to the Commission that such action is necessary or appropriate in the public interest, for the protection of investors, or otherwise in furtherance of the purposes of the Act.

IV. Solicitation of Comments

Interested persons are invited to submit written data, views, and arguments concerning the foregoing, including whether the proposed rule change is consistent with the Act. Comments may be submitted by any of the following methods:

Electronic Comments

- Use the Commission's Internet comment form (*http://www.sec.gov/rules/sro.shtml*); or
- Send an e-mail to *rule-comments@sec.gov.* Please include File Number SR–NYSE–2007–89 on the subject line.

Paper Comments

- Send paper comments in triplicate to Nancy M. Morris, Secretary, Securities and Exchange Commission, 100 F Street, NE., Washington, DC 20549–1090.

All submissions should refer to File Number SR–NYSE–2007–89. This file number should be included on the

[11] 17 CFR 200.30–3(a)(12).

[1] 15 U.S.C. 78s(b)(1).

[2] 17 CFR 240.19b–4.

[3] *See* Securities Exchange Act Release No. 56337 (August 29, 2007), 72 FR 51287 (September 6, 2007) (SR–NYSE–2007–78) (the ''Initial LPP Filing'').

[4] 15 U.S.C. 78f.

[5] 15 U.S.C. 78f(b)(4).

[6] 15 U.S.C. 78s(b)(3)(A).

[7] 17 CFR 19b–4(f)(2).

subject line if e-mail is used. To help the Commission process and review your comments more efficiently, please use only one method. The Commission will post all comments on the Commissions Internet Web site (*http://www.sec.gov/rules/sro.shtml*). Copies of the submission, all subsequent amendments, all written statements with respect to the proposed rule change that are filed with the Commission, and all written communications relating to the proposed rule change between the Commission and any person, other than those that may be withheld from the public in accordance with the provisions of 5 U.S.C. 552, will be available for inspection and copying in the Commission's Public Reference Room, 100 F Street, NE., Washington, DC 20549, on official business days between the hours of 10 a.m. and 3 p.m. Copies of such filing also will be available for inspection and copying at the principal office of the NYSE. All comments received will be posted without change; the Commission does not edit personal identifying information from submissions. You should submit only information that you wish to make available publicly. All submissions should refer to File Number SR–NYSE–2007–89 and should be submitted on or before October 30, 2007.

For the Commission, by the Division of Market Regulation, pursuant to delegated authority.[8]

Nancy M. Morris,

Secretary.

[FR Doc. E7–19751 Filed 10–5–07; 8:45 am]

BILLING CODE 8011–01–P

[8] 17 CFR 200.30–3(a)(12).

SECURITIES AND EXCHANGE COMMISSION

[Release No. 34–56595; File No. SR–NYSEArca–2007–93]

Self-Regulatory Organizations; NYSE Arca, Inc.; Notice of Filing and Immediate Effectiveness of a Proposed Rule Change as Modified by Amendment No. 2 Thereto Relating to Exchange Fees and Charges

DATE: October 1, 2007.

Pursuant to Section 19(b)(1) of the Securities Exchange Act of 1934 (''Act'')[1] and Rule 19b–4 thereunder,[2] notice is hereby given that on September 18, 2007, NYSE Arca, Inc. (''NYSE Arca'' or ''Exchange'') filed with the Securities and Exchange Commission (''Commission'') the proposed rule change as described in Items I, II, and III below, which Items have been substantially prepared by the Exchange. On September 28, 2007, the NYSE Arca submitted Amendment No. 1 to the proposed rule change. On September 28, 2007, NYSE Arca withdrew Amendment No. 1 and filed Amendment No. 2. NYSE Arca has designated this proposal as one establishing or changing a due, fee, or other charge imposed by NYSE Arca under Section 19(b)(3)(A)(ii) of the Act[3] and Rule 19b–4(f)(2) thereunder,[4] which renders the proposal effective upon filing with the Commission. The Commission is publishing this notice to solicit comments on the proposed rule change, as amended, from interested persons.

[1] 15 U.S.C. 78s(b)(1).

[2] 17 CFR 240.19b–4.

I. Self-Regulatory Organization's Statement of the Terms of Substance of the Proposed Rule Change

NYSE Arca proposes to amend its Schedule of Fees and Charges for Exchange Services (''Rate Schedule''). The text of the proposed rule change is available at the Exchange, the Commission's Public Reference Room, and *http://www.nysearca.com*.

II. Self-Regulatory Organization's Statement of the Purpose of, and Statutory Basis for, the Proposed Rule Change

In its filing with the Commission, the Exchange included statements concerning the purpose of and basis for the proposed rule change and discussed any comments it received on the proposed rule change. The text of these statements may be examined at the places specified in Item IV below. NYSE Arca has substantially prepared summaries, set forth in Sections A, B, and C below, of the most significant aspects of such statements.

A. Self-Regulatory Organization's Statement of the Purpose of, and Statutory Basis for, the Proposed Rule Change

1. Purpose

NYSE Arca states that the purpose of this filing is to amend the existing NYSE Arca Rate Schedule by establishing a pilot program under which the Exchange will cap, on a monthly basis, the Firm Facilitation Fee (''Pilot Program''). The Exchange also proposes to apply the Firm Facilitation Fee when non-OTP Firm[5] accounts, as well as OTP Firm accounts, are used to facilitate customer orders. The Exchange also proposes adding language to the Rate Schedule, to clarify that the Firm Facilitation Fee is applicable to manually executed orders only. Although effective upon filing, the Exchange intends this fee change to become operative on October 1, 2007.

NYSE Arca presently charges OTP Holders a Firm Facilitation Fee of $0.15 per contract. The Firm Facilitation Fee is applicable when a proprietary trading account of an OTP Firm is used to facilitate an order for a customer of the OTP Firm. As part of this filing, the Exchange is now proposing to apply the Firm Facilitation Fee to any transaction in which a firm proprietary account, of either an OTP Firm or non-OTP Firm, is used to facilitate an order for a customer of that same firm.[6] Presently, OTP Firms are charged the Broker Dealer & Firm Manual rate of $0.26 for facilitation trades they execute on behalf of non-OTP firms. According to the proposal, the Exchange will now apply the Firm Facilitation rate of $0.15 to such trades.

The Exchange proposes to establish a pilot program, under which OTP Firms will be eligible for a monthly cap of $50,000 on Firm Facilitation Fees. The $50,000 cap will be applicable to each firm account that is used for facilitating orders of customers of that same firm. Examples of how the Firm Facilitation Fee cap will be applied are shown below.

Example 1

OTP Firm A carries accounts for customers of the firm, for which the firm may, on occasion, facilitate certain option orders. During a given calendar month, the firm facilitates a number of orders for their customers, for which the firm incurs Firm Facilitation Fees totaling $60,000. Under the Pilot Program, the fee cap would have been met, and the Firm would be billed only $50,000.

Example 2

OTP Firm B carries accounts of public customers, as well as accounts of non-OTP Firms, who themselves may wish to facilitate orders for their own customers. During a given calendar month, OTP Firm B represents facilitation orders for a non-OTP Firm for which it incurs Firm Facilitation Fees totaling $60,000. During the same month, OTP Firm B also represents facilitation orders for another non-OTP Firm for which they incur Facilitation Fees totaling $60,000. While OTP Firm B itself has

[3] 15 U.S.C. 78s(b)(3)(A)(ii).

[4] 17 CFR 240.19b–4(f)(2).

[5] A non-OTP Firm is a broker dealer whose proprietary trades clear as Firm (clearance symbol F) with the Options Clearing Corporation (''OCC'') and is not an NYSE Arca OTP holder.

[6] In both instances the Firm Facilitation Fee will be applied to trades that have an OCC clearance account ''F'' on the trade side and an OCC clearance account ''C'' on the contra side of the transaction. Both sides of the trade will clear under the same clearing firm symbol.

incurred $120,000 in total Facilitation Fees for the month, the entire amount is not eligible for the fee cap. Orders on behalf of the first non-OTP Firm, which amounted to $60,000, are capped at $50,000, while orders on behalf of the second non-OTP Firm, which amounted to $60,000, are also capped at $50,000. In this example, OTP Firm B has incurred Facilitation Fees totaling $120,000, but because the fees are eligible for the fee cap under the Pilot Program, OTP Firm B will be billed only $100,000.

Example 3

OTP Firm C carries accounts of public customers, as well as accounts of non-OTP Firms, who themselves may wish to facilitate orders for their own customers. During a given calendar month, OTP Firm C facilitates orders for their customers, for which the firm incurs Firm Facilitation Fees totaling $60,000. During the same calendar month, OTP Firm C represents facilitation orders for a non-OTP Firm for which it incurs Facilitation Fees totaling $60,000. During the same month, OTP Firm C also represents facilitation orders for another non-OTP Firm for which the firm incurs Facilitation Fees totaling $40,000. While OTP Firm C itself has incurred $160,000 in total Firm Facilitation Fees for the month, the entire amount is not eligible for the fee cap. Facilitated orders, executed on behalf of OTP Firm C's customer, which amounted to $60,000, are capped at $50,000. Facilitated orders executed on behalf of the first non-OTP Firm, which amounted to $60,000, are also capped at $50,000, but facilitated orders executed on behalf of the second non-OTP Firm, which amounted to $40,000, are not subject to the fee cap. In this example, OTP Firm C has incurred Firm Facilitation Fees totaling $160,000, but because of the fee cap under the Pilot Program, OTP Firm C will be billed only $140,000.

OTP Firms wishing to take advantage of the fee cap must register for the Pilot Program with the NYSE Arca Finance Department, prior to the end of a calendar month, to ensure that the fee cap is applied correctly for billing purposes, for that month. The enrollment process will require that an OTP Firm supply the Exchange with information concerning the clearing and firm symbols of the OTP Firm's designated clearing account that may be used to facilitate customer orders, and/or the clearing and firm symbols of any non-OTP Firm customers of the OTP Firm that may facilitate their own customer's orders. Enrollment forms will be available from the NYSE Arca Finance Department. The enrollment information can be provided by the initiating firm, clearing firm or executing broker associated with these trades.

Certain classes of options listed on the NYSE Arca have as their underlying security, licensed products that carry a Royalty Fee (or license fee), on every contract traded. Royalty Fees that are incurred by the Exchange are passed-on to the actual participants executing the trade. These passed-through fees are assessed by the issuing agency, and are not Exchange Transaction Fees. The Exchange will not include Royalty Fees, which are passed-on to trade participants in connection with Firm Facilitation trades, when calculating the $50,000 per month fee cap.

By capping this Firm Facilitation Fee, the Exchange states that it hopes to garner additional order flow from market participants that are attracted to the competitive fee structure. The Exchange plans to offer this fee cap on a pilot basis until December 31, 2007. Thirty days prior to the conclusion of the Pilot Program, the Exchange will analyze the effectiveness of the fee cap and will propose, through a subsequent Rule 19b4 filing, to either terminate or extend the Pilot Program, or to make the fee cap permanent.

Facilitation trades, governed by NYSE Arca Rule 6.47, are Crossing Orders, and are manually executed by Floor Brokers. Until such time that the Exchange's electronic trading system's automated crossing mechanism is functional, all Crossing Orders are executed manually. Therefore the Firm Facilitation Fee is only applicable to manual executions. The Exchange proposes at this time to add language to the Rate Schedule to clarify this.

2. Statutory Basis

The Exchange believes that the proposed rule change is consistent with Section 6(b) of the Act [7] in general, and furthers the objectives of Section 6(b)(4) of the Act [8] in particular, in that it is designed to provide for the equitable allocation of reasonable dues, fees, and other charges among NYSE Arca members.

B. Self-Regulatory Organization's Statement on Burden on Competition

The Exchange believes that the proposed rule change will not impose any burden on competition that is not necessary or appropriate in furtherance of the purposes of the Act.

C. Self-Regulatory Organization's Statement on Comments on the Proposed Rule Change Received From Members, Participants, or Others

The Exchange has neither solicited nor received written comments on the proposed rule change.

[7] 15 U.S.C. 78f(b).

[8] 15 U.S.C. 78f(b)(4).

III. Date of Effectiveness of the Proposed Rule Change and Timing for Commission Action

The foregoing proposed rule change has been designated as a fee change pursuant to Section 19(b)(3)(A)(ii) of the Act [9] and Rule 19b–4(f)(2) [10] thereunder, because it establishes or changes a due, fee, or other charge imposed on members by the Exchange. Accordingly, the proposal will take effect upon filing with the Commission. At any time within 60 days of the filing of such proposed rule change, the Commission may summarily abrogate such rule change if it appears to the Commission that such action is necessary or appropriate in the public interest, for the protection of investors, or otherwise in furtherance of the purposes of the Act.[11]

IV. Solicitation of Comments

Interested persons are invited to submit written data, views, and arguments concerning the foregoing, including whether the proposed rule change is consistent with the Act. Comments may be submitted by any of the following methods:

Electronic Comments

- Use the Commission's Internet comment form (*http://www.sec.gov/rules/sro.shtml*); or
- Send an e-mail to *rule-comments@sec.gov.* Please include File Number SR–NYSEArca–2007–93 on the subject line.

Paper Comments

- Send paper comments in triplicate to Nancy M. Morris, Secretary, Securities and Exchange Commission, 100 F Street, NE., Washington, DC 20549–1090.

All submissions should refer to File Number SR–NYSEArca–2007–93. This file number should be included on the subject line if e-mail is used. To help the Commission process and review your comments more efficiently, please use only one method. The Commission will post all comments on the Commission's Internet Web site (*http://www.sec.gov/rules/sro.shtml*). Copies of the submission, all subsequent amendments, all written statements with respect to the proposed rule change that are filed with the Commission, and all written

[9] 15 U.S.C. 78s(b)(3)(A)(ii).

[10] 17 CFR 240.19b–4(f)(2).

[11] For purposes of calculating the 60-day period within which the Commission may summarily abrogate the proposed rule change, the Commission considers the period to commence on September 28, 2007, the date on which the Exchange filed Amendment No. 2. *See* 15 U.S.C. 78s(b)(3)(C).

communications relating to the proposed rule change between the Commission and any person, other than those that may be withheld from the public in accordance with the provisions of 5 U.S.C. 552, will be available for inspection and copying in the Commission's Public Reference Room, 100 F Street, NE., Washington, DC 20549, on official business days between the hours of 10 a.m. and 3 p.m. Copies of such filing also will be available for inspection and copying at the principal office of the Exchange. All comments received will be posted without change; the Commission does not edit personal identifying information from submissions. You should submit only information that you wish to make available publicly. All submissions should refer to File Number SR–NYSEArca–2007–93 and should be submitted on or before October 30, 2007.

For the Commission, by the Division of Market Regulation, pursuant to delegated authority.[12]

Nancy M. Morris,

Secretary.

[FR Doc. E7–19765 Filed 10–5–07; 8:45 am]

BILLING CODE 8011–01–P

[12] 17 CFR 200.30–3(a)(12).

DEPARTMENT OF STATE

[Public Notice 5953]

Termination of Statutory Debarment Pursuant to Section 38(g)(4) of the Arms Export Control Act for Davilyn Corporation

ACTION: Notice.

SUMMARY: Notice is hereby given that the Department of State has terminated the statutory debarment against Davilyn Corporation pursuant to Section 38(g)(4) of the Arms Export Control Act (AECA) (22 U.S.C. 2778).

EFFECTIVE DATE: October 9, 2007.

FOR FURTHER INFORMATION CONTACT: David C. Trimble, Director, Office of Defense Trade Controls Compliance, Directorate of Defense Trade Controls, Bureau of Political-Military Affairs, Department of State (202) 663–2807.

SUPPLEMENTARY INFORMATION: Section 38(g)(4) of the AECA and Section 127.11 of the ITAR prohibit the issuance of export licenses or other approvals to a person, or any party to the export, who has been convicted of violating the AECA and certain other U.S. criminal statutes enumerated at section 38(g)(1)(A) of the AECA and Section 120.27 of the ITAR. A person convicted of violating the AECA is also subject to statutory debarment under Section 127.7 of the ITAR.

In June 2005, Davilyn Corporation was convicted of violating the AECA and the ITAR (U.S. District Court, District of California, CR 05–00432–RMT). Based on this conviction, Davilyn Corporation was statutorily debarred pursuant to Section 38(g)(4) of the AECA and Section 127.7 of the ITAR and, thus, prohibited from participating directly or indirectly in exports of defense articles and defense services. Notice of debarment was published in the **Federal Register** (70 FR 69260, November 16, 2005).

Section 38(g)(4) of the AECA permits termination of debarment after consultation with the other appropriate U.S. agencies and after a thorough review of the circumstances surrounding the conviction and a finding that appropriate steps have been taken to mitigate any law enforcement concerns. The Department of State has determined that Davilyn Corporation has taken appropriate steps to address the causes of the violations and to mitigate any law enforcement concerns. Therefore, in accordance with Section 38(g)(4) of the AECA, the debarment against Davilyn Corporation is rescinded, effective October 9, 2007.

Dated: September 10, 2007.

Stephen D. Mull,

Acting Assistant Secretary of State, Bureau of Political-Military Affairs, Department of State.

[FR Doc. E7–19807 Filed 10–5–07; 8:45 am]

BILLING CODE 4710–25–P

DEPARTMENT OF TRANSPORTATION

Office of the Secretary

[Docket No. OST–2004–16951]

Notice of Request for Renewal of a Previously Approved Collection

AGENCY: Office of the Secretary, DOT.

ACTION: Notice.

SUMMARY: In accordance with the Paperwork Reduction Act of 1995 (44 U.S.C. Chapter 35, as amended), this notice announces that the Information Collection Request (ICR) abstracted below will be forwarded to the Office of Management and Budget (OMB) for renewal and comment. The ICR describes the nature of the information collection and its expected costs and burden. The **Federal Register** Notice with a 60-day comment period soliciting comments on the following collection of information was published on August 1, 2007 [Vol. 72, No. 147, Page 42218]. No comments were received.

DATES: Comments on this notice must be received by November 8, 2007 and sent to the attention of the DOT/OST Desk Officer, Office of Information and Regulatory Affairs, Office of Management and Budget, Docket Library, Room 10102, 725 17th Street, NW., Washington, DC 20503.

ADDRESSES: You may submit comments [identified by DOT DMS Docket Number OST–2004–16951] by any of the following methods:

- *Web Site*: *http://dms.dot.gov*. Follow the instructions for submitting comments on the DOT electronic docket site.
- *Fax*: 1–202–493–2251.
- *Mail*: Docket Management Facility; U.S. Department of Transportation, 1200 New Jersey Avenue, SE., W12–140, Washington, DC 20590.
- *Hand Delivery*: Room W12–140, 1200 New Jersey Avenue, SE., Washington, DC, between 9 a.m. and 5 p.m., Monday through Friday, except on Federal holidays.
- *Federal eRulemaking Portal*: Go to *http://www.regulations.gov*. Follow the online instructions for submitting comments.

Instructions: All submissions must include the agency name and docket number or Regulatory Identification Number (RIN) for this rulemaking. For detailed instructions on submitting comments and additional information on the rulemaking process, see the Public Participation heading of the Supplementary Information section of this document. Note that all comments received will be posted without change to *http://dms.dot.gov* including any personal information provided. Please see the Privacy Act heading under Regulatory Notes.

Docket: For access to the docket to read background documents or comments received, go to *http://dms.dot.gov* at any time or to W12–140, 1200 New Jersey Avenue, SE., Washington, DC, between 9 a.m. and 5 p.m., Monday through Friday, except Federal Holidays.

FOR FURTHER INFORMATION CONTACT: Lauralyn Remo, Air Carrier Fitness Division (X–56), Office of Aviation Analysis, Office of the Secretary, U.S. Department of Transportation, 400 Seventh Street, SW., Washington, DC 20590, (202) 366–9721.

SUPPLEMENTARY INFORMATION:

Title: Aircraft Accident Liability Insurance, 14 CFR Part 205.

OMB Control Number: 2106–0030.

Type of Request: Renewal without change, of a previously approved collection.

Abstract: 14 CFR part 205 contains the minimum requirements for air carrier accident liability insurance to protect the public from losses, and directs that certificates evidencing appropriate coverage must be filed with the Department.

Respondents: U.S. and foreign air carriers.

Estimated Number of Respondents: 4,606.

Estimated Total Burden on Respondents: 5,988 hours.

Comments are invited on: (a) Whether the proposed collection of information is necessary for the proper performance of the functions of the Department, including whether the information will have practical utility; (b) the accuracy of the Department's estimate of the burden of the proposed information collection; (c) ways to enhance the quality, utility and clarity of the information to be collected; and (d) ways to minimize the burden of the collection of information on respondents, including the use of automated collection techniques or other forms of information technology.

All responses to this notice will be summarized and included in the request for OMB approval. All comments will also become a matter of public record.

Issued in Washington, DC on October 2, 2007.

Todd M. Homan,

Director, Office of Aviation Analysis.

[FR Doc. E7–19847 Filed 10–5–07; 8:45 am]

BILLING CODE 4910–9X–P

DEPARTMENT OF TRANSPORTATION

Federal Aviation Administration

Agency Information Collection Activity Seeking OMB Approval

AGENCY: Federal Aviation Administration (FAA), DOT.

ACTION: Notice.

SUMMARY: The FAA invites public comments about our intention to request the Office of Management and Budget's (OMB) approval of a new information collection. The **Federal Register** Notice with a 60-day comment period soliciting comments on the following collection of information was published on November 28, 2006, vol. 71, no. 228, page 68881. The New England Region Aviation Expo database performs conference registration and helps plan the logistics and non-pilot courses for the expo.

DATES: Please submit comments by November 8, 2007.

FOR FURTHER INFORMATION CONTACT: Carla Mauney at *Carla.Mauney@faa.gov.*

SUPPLEMENTARY INFORMATION:

Federal Aviation Administration (FAA)

Title: New England Region Aviation Expo Database.

Type of Request: Approval for a new collection.

OMB Control Number: 2120–XXXX.

Forms(s): There are no FAA forms associated with this collection.

Affected Public: An estimated 500 Respondents.

Frequency: This information is collected once annually.

Estimated Average Burden per Response: Approximately 15 seconds per response.

Estimated annual Burden Hours: An estimated 2 hours annually.

Abstract: The New England Region Aviation Expo database performs conference registration and helps plan the logistics and non-pilot courses for the expo.

ADDRESSES: Interested persons are invited to submit written comments on the proposed information collection to the Office of Information and Regulatory Affairs, Office of Management and Budget. Comments should be addressed to Nathan Lesser, Desk Officer, Department of Transpiration/FAA, and sent via electronic mail to *oira_submission@omb.eop.gov* or faxed to (202) 395–6974.

Comments are invited on: Whether the proposed collection of information is necessary for the proper performance of the functions of the Department, including whether the information will have practical utility; the accuracy of the Department's estimates of the burden of the proposed information collection; ways to enhance the quality, utility, and clarity of the information to be collected; and ways to minimize the burden of the collection of information on respondents, including the use of automated collection techniques or other forms of information technology.

Issued in Washington, DC, on September 27, 2007.

Carla Mauney,

FAA Information Collection Clearance Officer, IT Enterprises Business Services Division, AES–200.

[FR Doc. 07–4960 Filed 10–5–07; 8:45 am]

BILLING CODE 4910–13–M

DEPARTMENT OF TRANSPORTATION

Federal Railroad Administration

[Docket No. FRA–2000–7257]

Notice No. 43; Railroad Safety Advisory Committee; Notice of Meeting

AGENCY: Federal Railroad Administration, Department of Transportation.

ACTION: Notice of the Railroad Safety Advisory Committee meeting.

SUMMARY: The Federal Railroad Administration (FRA) announces the next meeting of the Railroad Safety Advisory Committee (RSAC), a Federal Advisory Committee that develops railroad safety regulations through a consensus process. The RSAC meeting topics include opening remarks from the FRA Administrator, a presentation on the Risk Reduction Program, electronically controlled pneumatic brakes, and sight distances at highway-rail grade crossings. Status reports will be given on the locomotive safety standards, medical standards, passenger safety, railroad operating rules, and continuous welded rail-track standards working groups. The committee will be asked to vote on recommendations on passenger safety, adding and changing Title 49 Code of Federal Regulations 225 Cause Codes. This agenda is subject to change.

DATES: The meeting of the RSAC is scheduled to commence at 9:30 a.m. and conclude at 4 p.m. on Thursday, October 25, 2007.

ADDRESSES: The meeting of the RSAC will be held at the Holiday Inn Capitol, 550 C Street, SW., Washington, DC 20024. The meeting is open to the public on a first-come, first-served basis, and is accessible to individuals with disabilities. Sign and oral interpretation can be made available if requested 10 calendar days before the meeting.

FOR FURTHER INFORMATION CONTACT: Inga Toye, RSAC Coordinator, at: FRA; 1120 Vermont Avenue, NW., Mailstop 25; Washington, DC 20590, telephone (202) 493–6305; or Grady C. Cothen Jr., FRA Deputy Associate Administrator for Safety Standards and Program Development, at: FRA; 1120 Vermont Avenue, NW., Mailstop 25; Washington, DC 20590, telephone (202) 493–6302.

SUPPLEMENTARY INFORMATION: Pursuant to section 10(a)(2) of the Federal Advisory Committee Act (Pub. L. 92–463), FRA is giving notice of a meeting of the RSAC. The meeting is scheduled to begin at 9:30 a.m. and conclude at 4 p.m. on Thursday, October 25, 2007. The meeting of the RSAC will be held

at the Holiday Inn Capitol, 550 C Street, SW., Washington, DC 20024.

The RSAC was established to provide advice and recommendations to FRA on railroad safety matters. The RSAC is comprised of 54 voting representatives from 31 member organizations, representing various rail industry perspectives. In addition, there are nonvoting advisory representatives from the agencies with railroad safety regulatory responsibility in Canada and Mexico, the National Transportation Safety Board, and the Federal Transit Administration. The diversity of the committee ensures the requisite range of views and expertise necessary to discharge its responsibilities.

See the RSAC Web site for details on pending tasks at: *http://rsac.fra.dot.gov/.* Please refer to the notice published in the **Federal Register** on March 11, 1996 (61 FR 9740), for more information about the RSAC.

Issued in Washington, DC on October 2, 2007.

Grady C. Cothen, Jr.,

Deputy Associate Administrator for Safety Standards and Program Development.

[FR Doc. E7–19741 Filed 10–5–07; 8:45 am]

BILLING CODE 4910–06–P

DEPARTMENT OF TRANSPORTATION

National Highway Traffic Safety Administration

Petition for Exemption From the Vehicle Theft Prevention Standard; Fuji Heavy Industries U.S.A., Inc.

AGENCY: National Highway Traffic Safety Administration (NHTSA). Department of Transportation (DOT).

ACTION: Grant of petition for exemption.

SUMMARY: This document grants in full the Fuji Heavy Industries U.S.A., Inc.'s (FUSA) petition for exemption of the Subaru Forester vehicle line in accordance with 49 CFR Part 543, *Exemption from the Theft Prevention Standard.* This petition is granted because the agency has determined that the antitheft device to be placed on the line as standard equipment is likely to be as effective in reducing and deterring motor vehicle theft as compliance with the parts-marking requirements of the Theft Prevention Standard (49 CFR Part 541). FUSA requested confidential treatment for the information and attachments it submitted in support of its petition. In a letter dated July 10, 2007, the agency granted the petitioner's request for confidential treatment of the indicated areas of its petition.

DATES: The exemption granted by this notice is effective beginning with model year (MY) 2009.

FOR FURTHER INFORMATION CONTACT: Ms. Carlita Ballard, International Policy, Fuel Economy and Consumer Programs, NHTSA, 1200 New Jersey Avenue, SE., Washington, DC 20590. Ms. Ballard's phone number is (202) 366–0846. Her fax number is (202) 493–2990.

SUPPLEMENTARY INFORMATION: In a petition dated June 15, 2007, FUSA requested exemption from the parts-marking requirements of the theft prevention standard (49 CFR Part 541) for the Subaru Forester vehicle line, beginning with the 2009 model year. The petition has been filed pursuant to 49 CFR Part 543, *Exemption from Vehicle Theft Prevention Standard,* based on the installation of an antitheft device as standard equipment for an entire vehicle line.

Under § 543.5(a), a manufacturer may petition NHTSA to grant exemptions for one line of its vehicle lines per model year. In its petition, FUSA provided a detailed description and diagram of the identity, design, and location of the components of the antitheft device for the Forester vehicle line. FUSA stated that all Subaru Forester vehicles will be equipped with a passive, transponder-based electronic immobilizer device as standard. Major components of the antitheft device will include an electronic key, a passive immobilizer system, a key ring antenna and an engine control unit (ECU). System immobilization is automatically activated when the key is removed from the vehicle's ignition switch, or after 30 seconds if the ignition is simply moved to the off position and the key is not removed. The device will also have a visible and audible alarm, and panic mode feature. The alarm system will monitor door status and key identification. Unauthorized opening of a door will activate the alarm system causing sounding of the horn and flashing of the hazard lamps. FUSA's submission is considered a complete petition as required by 49 CFR 543.7 in that it meets the general requirements contained in 543.5 and the specific content requirements of 543.6.

FUSA also provided information on the reliability and durability of its proposed device, conducting tests based on its own specified standards. In a letter dated July 10, 2007, NHTSA granted FUSA confidential treatment for its test information. FUSA provided a list of the tests it conducted. FUSA believes that its device is reliable and durable because the device complied with its own specific requirements for each test. Additionally, FUSA stated that the immobilization features are designed and constructed within the vehicle's overall Controller Area Network Electrical Architecture. Therefore, the antitheft system cannot be separated and controlled.

FUSA stated that it believes that historically, NHTSA has seen a decreasing theft rate trend when electronic immobilization has been added to alarm systems. FUSA presented several HLDI Theft Loss Bulletins (February and April 1996, September 1997 and May 2000), as supporting evidence that theft rates have dropped dramatically on vehicles when immobilization devices are introduced. FUSA stated that it presently has immobilizer systems on all of its product lines (*i.e.*, two of six Forester models, all B9 Tribeca, Impreza, Legacy, and Outback models) and it believes the data shows immobilization has had a demonstrable effect in lowering its theft rates. FUSA also noted that recent state-by-state theft results from the National Insurance Crime Bureau reported that in only 2 of the 48 states listed in its results, did any Subaru vehicle appear in the top 10 list of stolen cars. Review of the theft rates published by the agency through MY/CY 2004 also revealed that, while there is some variation, the theft rates for Subaru vehicles have on average, remained below the median theft rate of 3.5826.

FUSA also provided a comparative table showing how its device is similar to other manufacturer's devices that have already been granted an exemption by NHTSA. In its comparison, FUSA makes note of Federal Notices published by NHTSA in which manufacturers have stated that they have seen reductions in theft due to the immobilization systems being used. Specifically, FUSA notes claims by Ford Motor Company that its 1997 Mustangs with immobilizers saw a 70% reduction in theft compared to its 1995 Mustangs without immobilizers. FUSA also noted its reliance on theft rates published by the agency which showed that theft rates were lower for Jeep Grand Cherokee immobilizer-equipped vehicles (model year 1995 through 1998) compared to older parts-marked Jeep Grand Cherokee vehicles (model year 1990 and 1991). FUSA stated that it believes that these comparisons show that its device is no less effective than those installed on lines for which the agency has already granted full exemption from the parts-marking requirements. The agency agrees that the device is substantially similar to devices in other vehicles lines for which

the agency has already granted exemptions.

Pursuant to 49 U.S.C. 33106 and 49 CFR 543.7(b), the agency grants a petition for an exemption from the parts-marking requirements of part 541 either in whole or in part, if it determines that, based upon substantial evidence, the standard equipment antitheft device is likely to be as effective in reducing and deterring motor vehicle theft as compliance with the parts-marking requirements of part 541. The agency finds that FUSA has provided adequate reasons for its belief that the antitheft device will reduce and deter theft. This conclusion is based on the information FUSA provided about its device.

The agency concludes that the device will provide the five types of performance listed in § 543.6(a)(3): Promoting activation; attracting attention to the efforts of unauthorized persons to enter or operate a vehicle by means other than a key; preventing defeat or circumvention of the device by unauthorized persons; preventing operation of the vehicle by unauthorized entrants; and ensuring the reliability and durability of the device.

For the foregoing reasons, the agency hereby grants in full FUSA's petition for exemption for the vehicle line from the parts-marking requirements of 49 CFR Part 541. The agency notes that 49 CFR Part 541, Appendix A–1, identifies those lines that are exempted from the Theft Prevention Standard for a given model year. 49 CFR 543.7(f) contains publication requirements incident to the disposition of all Part 543 petitions. Advanced listing, including the release of future product nameplates, the beginning model year for which the petition is granted and a general description of the antitheft device is necessary in order to notify law enforcement agencies of new vehicle lines exempted from the parts-marking requirements of the Theft Prevention Standard.

If FUSA decides not to use the exemption for this line, it must formally notify the agency, and, thereafter, the line must be fully marked as required by 49 CFR 541.5 and 541.6 (marking of major component parts and replacement parts).

NHTSA notes that if FUSA wishes in the future to modify the device on which this exemption is based, the company may have to submit a petition to modify the exemption. Section 543.7(d) states that a Part 543 exemption applies only to vehicles that belong to a line exempted under this part and equipped with the anti-theft device on which the line's exemption is based. Further, § 543.9(c)(2) provides for the submission of petitions ''to modify an exemption to permit the use of an antitheft device similar to but differing from the one specified in that exemption.''

The agency wishes to minimize the administrative burden that § 543.9(c)(2) could place on exempted vehicle manufacturers and itself. The agency did not intend Part 543 to require the submission of a modification petition for every change to the components or design of an antitheft device. The significance of many such changes could be *de minimis*. Therefore, NHTSA suggests that if the manufacturer contemplates making any changes the effects of which might be characterized as *de minimis*, it should consult the agency before preparing and submitting a petition to modify.

Authority: 49 U.S.C. 33106; delegation of authority at 49 CFR 1.50.

Issued on: October 2, 2007.

Stephen R. Kratzke,

Associate Administrator for Rulemaking.

[FR Doc. E7–19754 Filed 10–5–07; 8:45 am]

BILLING CODE 4910–59–P

DEPARTMENT OF TRANSPORTATION

Surface Transportation Board

[STB Ex Parte No. 670 (Sub-No. 1)]

Notice of Rail Energy Transportation Advisory Committee Meeting

AGENCY: Surface Transportation Board, DOT.

ACTION: Notice of Rail Energy Transportation Advisory Committee meeting.

SUMMARY: Notice is hereby given of a meeting of the Rail Energy Transportation Advisory Committee (RETAC), pursuant to section 10(a)(2) of the Federal Advisory Committee Act, Public Law 92–463, as amended (5 U.S.C., App. 2).

DATES: The meeting will be held on October 24, 2007, beginning at 10 a.m., E.D.T.

ADDRESSES: The meeting will be held in the 1st floor hearing room at the Surface Transportation Board's headquarters at Patriot's Plaza, 395 E Street, SW., Washington, DC 20423–0001.

FOR FURTHER INFORMATION CONTACT: Scott M. Zimmerman (202) 245–0202. [Assistance for the hearing impaired is available through the Federal Information Relay Service (FIRS) at: (800) 877–8339].

SUPPLEMENTARY INFORMATION: RETAC arose from a proceeding instituted by the Board, in *Establishment of a Rail Energy Transportation Advisory Committee*, STB Ex Parte No. 670. RETAC was formed to provide advice and guidance to the Board, and to serve as a forum for discussion of emerging issues regarding the transportation by rail of energy resources, particularly, but not necessarily limited to, coal, ethanol, and other biofuels. The purpose of this meeting is to begin discussions regarding issues such as rail performance, capacity constraints, infrastructure planning and development, and effective coordination among suppliers, carriers, and users of energy resources.

The meeting, which is open to the public, will be conducted pursuant to RETAC's charter and Board procedures. Further communications about this meeting may be announced through the Board's Web site at *http://www.stb.dot.gov.*

This action will not significantly affect either the quality of the human environment or the conservation of energy resources.

Authority: 49 U.S.C. 721, 49 U.S.C. 11101; 49 U.S.C. 11121.

Decided: October 3, 2007.

By the Board, Vernon A. Williams, Secretary.

Vernon A. Williams,

Secretary.

[FR Doc. E7–19806 Filed 10–5–07; 8:45 am]

BILLING CODE 4915–01–P

DEPARTMENT OF THE TREASURY

Submission for OMB Review; Comment Request

September 26, 2007.

The Department of the Treasury has submitted the following public information collection requirement(s) to OMB for review and clearance under the Paperwork Reduction Act of 1995, Public Law 104–13. Copies of the submission(s) may be obtained by calling the Treasury Bureau Clearance Officer listed. Comments regarding this information collection should be addressed to the OMB reviewer listed and to the Treasury Department Clearance Officer, Department of the Treasury, Room 11000, 1750 Pennsylvania Avenue, NW., Washington, DC 20220.

DATES: Written comments should be received on or before November 8, 2007 to be assured of consideration.

Internal Revenue Service (IRS)

OMB Number: 1545–1352.

Type of Review: Extension.

Title: PS–276–76 (Final) Treatment of Gain From Disposition of Certain Natural Resource Recapture Property.

Description: This regulation prescribes rules for determining the tax treatment of gain from the disposition of natural resource recapture property in accordance with Internal Revenue Code section 1254. Gain is treated as ordinary income in an amount equal to the intangible drilling and development costs and depletion deductions taken with respect to the property. The information that taxpayers are required to retain will be used by the IRS to determine whether a taxpayer has properly characterized gain on the disposition of section 1254 property.

Respondents: Businesses and other for-profits.

Estimated Total Burden Hours: 2,000 hours.

OMB Number: 1545–0150.

Type of Review: Extension.

Title: Power of Attorney and Declaration of Representative.

Form: 2848.

Description: Form 2848 is used to authorize someone to act for the respondent in tax matters. It grants all powers that the taxpayer has except signing a return and cashing refund checks. Data is used to identify representatives and to ensure that confidential information is not divulged to unauthorized persons. Form 2848 is also used to input representative on CAF (Central Authorization File).

Respondents: Individuals and households.

Estimated Total Burden Hours: 880,333 hours.

OMB Number: 1545–1909.

Type of Review: Extension.

Title: REG–149519–03 (NPRM) Section 707 Regarding Disguised Sales, Generally.

Description: Section 707(a)(2) provides, in part, that if there is a transfer of money or property by a partner to a partnership and a related transfer of money or property by the partnership to another partner, the transfers will be treated as a disguised sale of a partnership interest between the partners. The regulations provide rules relating to disguised sales of partnership interests and require that the partners or the partnership disclose the transfers and certain assumptions of liabilities, with certain attendant facts, in some situations.

Respondents: Businesses and other for-profits.

Estimated Total Burden Hours: 7,500 hours.

OMB Number: 1545–1746.

Type of Review: Extension.

Title: Recommendation for Juvenile Employment with the Internal Revenue Service.

Form: 13094

Description: The data collected on the form provides the Internal Revenue Service with a consistent method for making suitability determination on juveniles for employment within the Service.

Respondents: Individuals and households.

Estimated Total Burden Hours: 208 hours.

OMB Number: 1545–1345.

Type of Review: Extension.

Title: CO–99–91 (Final) Limitations on Corporate Net Operating Loss.

Description: This regulation modifes the application of segregation rules under section 382 in the case of certain issuances of stock by a loss corporation. This regulation provides that the segregation rules do not apply to small issuances of stock, as defined, and apply only in part to certain other issuances of stock for cash.

Respondents: Businesses and other for-profits.

Estimated Total Burden Hours: 1 hour.

OMB Number: 1545–0901.

Type of Review: Extension.

Title: Mortgage Interest Statement.

Form: 1098.

Description: Form 1098 is used to report $600 or more of mortgage interest received from an individual in the course of the mortgagor's trade or business.

Respondents: Individuals and households.

Estimated Total Burden Hours: 8,038,669 hours.

OMB Number: 1545–1362.

Type of Review: Revision.

Title: Renewable Electricity Production Credit.

Form: 8835.

Description: Filers claiming the general business credit for electricity produced from certain renewable resources under code sections 38 and 45 must file Form 8835.

Respondents: Businesses and other for-profits.

Estimated Total Burden Hours: 943 hours.

OMB Number: 1545–0056.

Type of Review: Extension

Title: Form 1023, Application for Recognition of Exemption Under Section 501(c)(3) of the Internal Revenue Code.

Form: 1023.

Description: Form 1023 is filed by applicants seeking Federal income tax exemption as organization described in section 501(c)(3). IRS uses the information to determine if the applicant is exempt and whether the applicant is a private foundation.

Respondents: Not-for-profit institutions.

Estimated Total Burden Hours: 3,138,550 hours.

OMB Number: 1545–1205.

Type of Review: Revision.

Title: Disabled Access Credit.

Description: The reporting requirements affect U.S. persons that are direct and indirect shareholders of passive foreign investment companies (PFICs). The IRS uses Form 8621 to identify PFICs, U.S. persons that are shareholders, and transactions subject to PFIC taxation and verify income inclusions, excess distributions and deferred tax amounts.

Respondents: Businesses and other for-profits.

Estimated Total Burden Hours: 2,500 hours.

OMB Number: 1545–1148.

Type of Review: Extension.

Title: EE–113–90 (TD 8324) Final and Temporary Regulations Employee Business Expenses—Reporting and Withholding on Employee Business Expense Reimbursements and Allowances.

Description: These temporary and final regulations provide rules concerning the taxation of, and reporting and withholding on, employee business expense reimbursements and other expense allowance arrangements. Respondents: Businesses and other for-profits.

Estimated Total Burden Hours: 709,728 hours.

OMB Number: 1545–1882.

Type of Review: Extension.

Title: Request for Waiver of Annual Income Recertification Requirement for the Low-Income Housing Credit.

Form: 8877.

Description: Owners of low-income housing buildings that are 100% occupied by low-income tenants may request a waiver from the annual recertification of income requirement, as provided by Code section 42(g)(8)(B).

Respondents: Businesses and other for-profits.

Estimated Total Burden Hours: 1,598 hours.

OMB Number: 1545–2038.

Type of Review: Extension.

Title: TD F–90–22.1, Report of Foreign Bank and Financial Accounts.

Form: TD F 90–22.1.

Description: This information is collected because of its high degree of usefulness in criminal, tax, or regulatory investigations or procedures or in the

conduct of intelligence or counter intelligence activities, including analysis, to protect against international terrorism. Respondents include all United States persons who have a financial interest in or signature or other authority over foreign financial accounts with an aggregate value of over $10,000.

Respondents: Individuals and households.

Estimated Total Burden Hours: 93,921 hours.

OMB Number: 1545–1186.

Type of Review: Extension.

Title: Rental Real Estate Income and Expense of a Partnership or an S Corporation.

Form: 8825.

Description: Form 8825 is used to verify that partnerships and S corporations have correctly reported their income and expenses from rental real estate property. The form is filed with either Form 1065 or Form 1120S.

Respondents: Businesses and other for-profits.

Estimated Total Burden Hours: 6,288,600 hours.

Clearance Officer:

Glenn P. Kirkland, (202) 622–3428, Internal Revenue Service, Room 6516, 1111 Constitution Avenue, NW., Washington, DC 20224.

OMB Reviewer: Alexander T. Hunt, (202) 395–7316, Office of Management and Budget, Room 10235, New Executive Office Building, Washington, DC 20503.

Robert Dahl,

Treasury PRA Clearance Officer.

[FR Doc. E7–19813 Filed 10–5–07; 8:45 am]

BILLING CODE 4830–01–P

DEPARTMENT OF THE TREASURY

Submission for OMB Review; Comment Request

October 2, 2007.

The Department of the Treasury has submitted the following public information collection requirement(s) to OMB for review and clearance under the Paperwork Reduction Act of 1995, Public Law 104–13. Copies of the submission(s) may be obtained by calling the Treasury Bureau Clearance Officer listed. Comments regarding this information collection should be addressed to the OMB reviewer listed and to the Treasury Department Clearance Officer, Department of the Treasury, Room 11000, 1750 Pennsylvania Avenue, NW., Washington, DC 20220.

DATES: Written comments should be received on or before November 8, 2007 to be assured of consideration.

Community Development Financial Institutions Fund

OMB Number: 1559–0025.

Type of Review: Reinstatement with Change.

Title: Native American CDFI Assistance (NACA) Program Application.

Description: Through the Native American CDFI Assistance Program, the CDFI Fund will provide technical assistance to CDFIs already serving Native American communities as well as technical assistance to help Native American Communities form new CDFIs.

Respondents: Not-for-profit institutions.

Estimated Total Burden Hours: 2,600 hours.

Clearance Officer: Ashanti McCallum, (202) 622–9018, Community Development Financial Institutions Fund, Department of the Treasury, 601 13th Street, NW., Suite 200 South, Washington, DC 20005.

OMB Reviewer: Alexander T. Hunt, (202) 395–7316, Office of Management and Budget, Room 10235, New Executive Office Building, Washington, DC 20503.

Robert Dahl,

Treasury PRA Clearance Officer.

[FR Doc. E7–19814 Filed 10–5–07; 8:45 am]

BILLING CODE 4810–70–P

Federal Register

Tuesday,
October 9, 2007

Part II

State Justice Institute

Grant Guideline for 2008; Notice

STATE JUSTICE INSTITUTE

Grant Guideline, Notice

AGENCY: State Justice Institute.

ACTION: Proposed Grant Guideline for 2008.

SUMMARY: This Guideline sets forth the administrative, programmatic, and financial requirements attendant to Fiscal Year 2008 State Justice Institute grants, cooperative agreements, and contracts.

DATES: October 9, 2007.

FOR FURTHER INFORMATION CONTACT: Janice Munsterman, Executive Director, State Justice Institute, 1650 King St. (Suite 600), Alexandria, VA 22314, (703) 684–6100 X202, *jmunsterman@statejustice.org*.

SUPPLEMENTARY INFORMATION: Pursuant to the State Justice Institute Act of 1984, 42 U.S.C. 10701, *et seq.*, as amended, the Institute is authorized to award grants, cooperative agreements, and contracts to State and local courts, nonprofit organizations, and others for the purpose of improving the quality of justice in the State courts of the United States.

Final appropriations legislation for fiscal year (FY) 2008 is still pending. The House-passed version (H.R. 3093) includes $4,640,000 for SJI in FY 2008; the Senate Appropriations Committee (S. 1745) version of the bill includes $3,500,000.

Regardless of the final amount provided to SJI for FY 2008, the Institute's Board of Directors intends to solicit grant applications across the range of grant programs available.

The following Grant Guideline is adopted by the State Justice Institute for FY 2008:

Table of Contents

I. The Mission of the State Justice Institute
II. Eligibility for Award
III. Scope of the Program
IV. Applications
V. Application Review Procedures
VI. Compliance Requirements
VII. Financial Requirements
VIII. Grant Adjustments
• Appendix A SJI Libraries: Designated Sites and Contacts
• Appendix B Grant Application Forms
○ Form A—Application and Application Instructions
○ Form B—Certificate of State Approval and Instructions
○ Form C—Project Budget and Instructions
○ Form D—Assurances
○ Disclosure of Lobbying Activities
• Appendix C Scholarship Application Forms (Forms S1 and S2)

I. The Mission of the State Justice Institute

The Institute was established by Public Law 98–620 to improve the administration of justice in the State courts of the United States. Incorporated in the State of Virginia as a private, nonprofit corporation, the Institute is charged, by statute, with the responsibility to:

• Direct a national program of financial assistance designed to assure that each citizen of the United States is provided ready access to a fair and effective system of justice;

• Foster coordination and cooperation with the Federal judiciary;

• Promote recognition of the importance of the separation of powers doctrine to an independent judiciary; and

• Encourage education for judges and support personnel of State court systems through national and State organizations, including universities.

To accomplish these broad objectives, the Institute is authorized to provide funds to State courts, national organizations which support and are supported by State courts, national judicial education organizations, and other organizations that can assist in improving the quality of justice in the State courts. The Institute is supervised by a Board of Directors appointed by the President, with the consent of the Senate. The Board is statutorily composed of six judges; a State court administrator; and four members of the public, no more than two of whom can be of the same political party.

Through the award of grants, contracts, and cooperative agreements, the Institute is authorized to perform the following activities:

A. Support research, demonstrations, special projects, technical assistance, and training to improve the administration of justice in the State courts;

B. Provide for the preparation, publication, and dissemination of information regarding State judicial systems;

C. Participate in joint projects with Federal agencies and other private grantors;

D. Evaluate or provide for the evaluation of programs and projects to determine their impact upon the quality of criminal, civil, and juvenile justice and the extent to which they have contributed to improving the quality of justice in the State courts;

E. Encourage and assist in furthering judicial education; and,

F. Encourage, assist, and serve in a consulting capacity to State and local justice system agencies in the development, maintenance, and coordination of criminal, civil, and juvenile justice programs and services.

II. Eligibility for Award

The Institute is authorized by Congress to award grants, cooperative agreements, and contracts to the following entities and types of organizations:

A. *State and local courts and their agencies (42 U.S.C. 10705(b)(1)(A)).*

B. *National nonprofit organizations controlled by, operating in conjunction with, and serving the judicial branches of State governments (42 U.S.C. 10705(b)(1)(B)).*

C. *National nonprofit organizations for the education and training of judges and support personnel of the judicial branch of State governments (42 U.S.C. 10705(b)(1)(C)).* An applicant is considered a national education and training applicant under section 10705(b)(1)(C) if:

1. The principal purpose or activity of the applicant is to provide education and training to State and local judges and court personnel; and

2. The applicant demonstrates a record of substantial experience in the field of judicial education and training.

D. *Other eligible grant recipients (42 U.S.C. 10705 (b)(2)(A)–(D)).*

1. Provided that the objectives of the project can be served better, the Institute is also authorized to make awards to:

a. Nonprofit organizations with expertise in judicial administration;

b. Institutions of higher education;

c. Individuals, partnerships, firms, corporations (for-profit organizations must waive their fees); and

d. Private agencies with expertise in judicial administration.

2. The Institute may also make awards to State or local agencies and institutions other than courts for services that cannot be adequately provided through nongovernmental arrangements (42 U.S.C. 10705(b)(3)).

E. *Inter-agency Agreements.* The Institute may enter into inter-agency agreements with Federal agencies (42 U.S.C. 10705(b)(4)) and private funders to support projects consistent with the purposes of the State Justice Institute Act.

III. Scope of the Program

SJI is offering five types of grants in FY 2008: Project Grants, Technical Assistance (TA) Grants, Curriculum Adaptation and Training (CAT) Grants, Partner Grants, and Scholarships. Effective beginning in FY 2007, SJI no longer awards Continuation Grants to extend previous or future Project or Partner Grants.

A. Project Grants

Project Grants are intended to support innovative education and training, research and evaluation, demonstration, and technical assistance projects that can improve the administration of justice in State courts locally or nationwide. Project Grants may ordinarily not exceed $300,000. Grant periods for Project Grants ordinarily may not exceed 36 months. No Continuation Grants will be awarded.

Applicants for Project Grants will be required to contribute a cash match of not less than 50% of the total cost of the proposed project. In other words, grant awards by SJI must be matched at least dollar for dollar by grant applicants. Applicants may contribute the required cash match directly or in cooperation with third parties. Prospective applicants should carefully review section VI.8. (matching requirements) and Section VI.16.a. (non-supplantation) of the guidelines prior to beginning the application process. If questions arise, applicants are strongly encouraged to consult with the Institute.

As set forth in Section I., the Institute is authorized to fund projects addressing a broad range of program areas. Though the Board is likely to favor Project Grant applications focused on the Special Interest program categories described below, potential applicants are also encouraged to bring to the attention of the Institute innovative projects outside those categories. Funds will not be made available for the ordinary, routine operations of court systems or that support ordinary operations of courts.

1. Special Interest Program Criteria and Categories

The Institute is interested in funding both innovative programs and programs of proven merit that can be replicated in other jurisdictions. The Institute is especially interested in funding projects that:

- Formulate new procedures and techniques, or creatively enhance existing procedures and techniques;
- Address aspects of the State judicial systems that are in special need of serious attention;
- Have national significance by developing products, services, and techniques that may be used in other States; and
- Create and disseminate products that effectively transfer the information and ideas developed to relevant audiences in State and local judicial systems, or provide technical assistance to facilitate the adaptation of effective programs and procedures in other State and local jurisdictions.

A project will be identified as a Special Interest project if it meets the four criteria set forth above and it falls within the scope of the Board-designated Special Interest program categories listed below. The order of listing does not imply any ranking of priorities among the categories.

a. Immigration Issues

Recent immigration growth is having a significant impact on State and local courts. Courts along the Southwest Border, and other areas of the United States with large immigrant populations, are contending with issues such as how to provide culturally appropriate services; increases in gang-crime cases involving immigrants; and the impact of federal and state immigration policies on court operations. The Institute is interested in projects that highlight the issues State and local courts face in addressing the demands of increased immigration, and potential solutions to those issues. The Institute is also interested in judicial education or other programs that prepare judges and court officials to address immigration issues in their courts, and the development of plans of action to improve service delivery, build community coalitions, and accommodate federal and state immigration policies.

b. Courts and the Media

Recent repeated public attacks on courts have gone largely unanswered, because judges were unwilling and/or courts were unable to respond effectively. No one is better prepared than a judge to describe decision-making on the bench within the law and the Constitution. The Institute is interested in projects that explore the role of judge as public commentator within ethical and professional bounds. The Institute is also interested in judicial education or other programs that prepare judges and court officials to serve as spokesmen in short notice, high profile circumstances, especially in situations where courts lack dedicated press secretaries. Finally, the Institute is interested in promoting initiatives that improve relations between the judiciary and the media, since much of the recent rancor between the two seems based on unfamiliarity with one another's duties, responsibilities, and limitations. In particular, the Institute is interested in proposals that focus on cultivating trust and open communication between the Third Branch and the Fourth Estate on a day-to-day basis, because dialogue between strangers is rarely started and never sustained in a crisis.

c. Elder Issues

This category includes research, demonstration, evaluation, and education projects designed to improve management of guardianship, probate, fraud, Americans with Disability Act, and other types of elder-related cases. The Institute is particularly interested in projects that would develop and evaluate judicial branch education programs addressing elder law and related issues.

d. Performance Standards and Outcome Measures

This category includes projects that will develop and measure performance standards and outcomes for all aspects of court operations. The Institute is particularly interested in projects that take the National Center for State Courts' ''CourTools'' to the next level. Other initiatives designed to further professionalize court staff and operations, or to objectively evaluate the costs and benefits and cost-effectiveness of problem solving courts, are also welcome.

e. Relationship Between State and Federal Courts

This category includes research, demonstration, evaluation, and education projects designed to facilitate appropriate and effective communication, cooperation, and coordination between State and Federal courts. The Institute is also interested in projects that improve relationships between the courts, the legislative and executive branches, and the people.

B. Technical Assistance (TA) Grants

TA Grants are intended to provide State or local courts, or regional court associations, with sufficient support to obtain expert assistance to diagnose a problem, develop a response to that problem, and implement any needed changes. TA Grants may not exceed $30,000, and shall only cover the cost of obtaining the services of expert consultants. Examples of expenses not covered by TA Grants include the salaries, benefits, travel, or training costs of full- or part-time court employees. Grant periods for TA Grants ordinarily may not exceed 24 months. In calculating project duration, applicants are cautioned to fully consider the time required to issue a request for proposals, negotiate a contract with the selected provider, and execute the project.

Applicants for TA Grants will be required to contribute a match of not less than 50% of the grant amount requested, of which 20% must be cash. In other words, a grantee seeking a $30,000 TA Grant must provide a

$15,000 match, of which up to $12,000 can be in-kind and not less than $3,000 must be cash. TA Grant application procedures can be found in section IV.B.

C. Curriculum Adaptation and Training (CAT) Grants

CAT Grants are intended to: (1) Enable courts and regional or national court associations to modify and adapt model curricula, course modules, or conference programs to meet States' or local jurisdictions' educational needs; train instructors to present portions or all of the curricula; and pilot-test them to determine their appropriateness, quality, and effectiveness, or (2) conduct judicial branch education and training programs, led by either expert or in-house personnel, designed to prepare judges and court personnel for innovations, reforms, and/or new technologies recently adopted by grantee courts. CAT Grants may not exceed $20,000. Grant periods for CAT Grants ordinarily may not exceed 12 months.

Applicants for CAT Grants will be required to contribute a match of not less than 50% of the grant amount requested, of which 20% must be cash. In other words, a grantee seeking a $20,000 CAT Grant must provide a $10,000 match, of which up to $8,000 can be in-kind and not less than $2,000 must be cash. CAT Grant application procedures can be found in section IV.C.

D. Scholarships for Judges and Court Managers

Scholarships are intended to enhance the skills, knowledge, and abilities of State court judges and court managers by enabling them to attend out-of-State, or to enroll in online, educational and training programs sponsored by national and State providers that they could not otherwise attend or take online because of limited State, local, and personal budgets. Scholarships may not exceed $1,500. The SJI Board intends to reserve up to $175,000 for scholarships. Scholarship application procedures can be found in section IV.D.

E. Partner Grants

Partner Grants are intended to allow SJI and Federal, State, or local agencies or foundations, trusts, or other private entities to combine financial resources in pursuit of common interests. Though many, if not most, Partner Grants will fall under the Special Interest program categories cited in section III.A. proposals addressing other emerging or high priority court-related problems will be considered on a case-by-case basis. SJI and its financial partners may set any level for Partner Grants, subject to the entire amount of the grant being available at the time of the award; applicants for Partner Grants may request any amount of funding. Grant periods for Partner Grants ordinarily may not exceed 36 months.

Partner Grants are subject to the same cash match requirement as Project Grants. In other words, grant awards by SJI must be matched at least dollar for dollar. Applicants may contribute the required cash match directly or in cooperation with third parties. Partner Grants are coordinated by the funding organizations. Applicants considering Partner Grants are encouraged to contact the State Justice Institute staff to discuss the potential of this mechanism for project funding. Partner Grant application procedures can be found in section IV.E.

IV. Applications

A. Project Grants

An application for a Project Grant must include an application form; budget forms (with appropriate documentation); a project abstract and program narrative; a disclosure of lobbying form, when applicable; and certain certifications and assurances (see below). See Appendix B for the Project Grant application forms. For a summary of the application process, visit the Institute's Web site (*http://www.statejustice.org*) and click on On-Line Tutorials, then Project Grant.

1. Forms

a. Application Form (Form A)

The application form requests basic information regarding the proposed project, the applicant, and the total amount of funding requested from the Institute. It also requires the signature of an individual authorized to certify on behalf of the applicant that the information contained in the application is true and complete; that submission of the application has been authorized by the applicant; and that if funding for the proposed project is approved, the applicant will comply with the requirements and conditions of the award, including the assurances set forth in Form D.

b. Certificate of State Approval (Form B)

An application from a State or local court must include a copy of Form B signed by the State's Chief Justice or Chief Judge, the director of the designated agency, or the head of the designated council. The signature denotes that the proposed project has been approved by the State's highest court or the agency or council it has designated. It denotes further that if the Institute approved funding for the project, the court or the specified designee will receive, administer, and be accountable for the awarded funds.

c. Budget Form (Form C)

Applicants must submit a Form C. In addition to Form C, applicants must provide a detailed budget narrative providing an explanation of the basis for the estimates in each budget category (see subsection A.4. below).

If funds from other sources are required to conduct the project, either as match or to support other aspects of the project, the source, current status of the request, and anticipated decision date must be provided.

d. Assurances (Form D)

This form lists the statutory, regulatory, and policy requirements with which recipients of Institute funds must comply.

e. Disclosure of Lobbying Activities

Applicants other than units of State or local government are required to disclose whether they, or another entity that is part of the same organization as the applicant, have advocated a position before Congress on any issue, and to identify the specific subjects of their lobbying efforts (see section VI.A.7.).

2. Project Abstract

The abstract should highlight the purposes, goals, methods, and anticipated benefits of the proposed project. It should not exceed 1 single-spaced page on 8½ by 11 inch paper.

3. Program Narrative

The program narrative for an application may not exceed 25 double-spaced pages on 8½ by 11 inch paper. Margins must be at least 1 inch, and type size must be at least 12-point and 12 cpi. The pages should be numbered. This page limit does not include the forms, the abstract, the budget narrative, and any appendices containing resumes and letters of cooperation or endorsement. Additional background material should be attached only if it is essential to impart a clear understanding of the proposed project. Numerous and lengthy appendices are strongly discouraged.

The program narrative should address the following topics:

a. Project Objectives

The applicant should include a clear, concise statement of what the proposed project is intended to accomplish. In stating the objectives of the project, applicants should focus on the overall programmatic objective (e.g., to enhance

understanding and skills regarding a specific subject, or to determine how a certain procedure affects the court and litigants) rather than on operational objectives (e.g., provide training for 32 judges and court managers, or review data from 300 cases).

b. Program Areas To Be Covered

The applicant should note the Special Interest criteria and category addressed by the proposed project when appropriate (see section III.A.).

c. Need for the Project

If the project is to be conducted in any specific location(s), the applicant should discuss the particular needs of the project site(s) to be addressed by the project and why those needs are not being met through the use of existing programs, procedures, services, or other resources.

If the project is not site-specific, the applicant should discuss the problems that the proposed project would address, and why existing programs, procedures, services, or other resources cannot adequately resolve those problems. The discussion should include specific references to the relevant literature and to the experience in the field.

d. Tasks, Methods and Evaluations

(1) *Tasks and Methods.* The applicant should delineate the tasks to be performed in achieving the project objectives and the methods to be used for accomplishing each task. For example:

(a) *For research and evaluation projects*, the applicant should include the data sources, data collection strategies, variables to be examined, and analytic procedures to be used for conducting the research or evaluation and ensuring the validity and general applicability of the results. For projects involving human subjects, the discussion of methods should address the procedures for obtaining respondents' informed consent, ensuring the respondents' privacy and freedom from risk or harm, and protecting others who are not the subjects of research but would be affected by the research. If the potential exists for risk or harm to human subjects, a discussion should be included that explains the value of the proposed research and the methods to be used to minimize or eliminate such risk.

(b) *For education and training projects*, the applicant should include the adult education techniques to be used in designing and presenting the program, including the teaching/learning objectives of the educational design, the teaching methods to be used, and the opportunities for structured interaction among the participants; how faculty would be recruited, selected, and trained; the proposed number and length of the conferences, courses, seminars, or workshops to be conducted and the estimated number of persons who would attend them; the materials to be provided and how they would be developed; and the cost to participants.

(c) *For demonstration projects*, the applicant should include the demonstration sites and the reasons they were selected, or if the sites have not been chosen, how they would be identified and their cooperation obtained; and how the program or procedures would be implemented and monitored.

(d) *For technical assistance projects*, the applicant should explain the types of assistance that would be provided; the particular issues and problems for which assistance would be provided; how requests would be obtained and the type of assistance determined; how suitable providers would be selected and briefed; how reports would be reviewed; and the cost to recipients.

(2) *Evaluation.* Projects must include an evaluation plan to determine whether the project met its objectives. The evaluation should be designed to provide an objective and independent assessment of the effectiveness or usefulness of the training or services provided; the impact of the procedures, technology, or services tested; or the validity and applicability of the research conducted. In addition, where appropriate, the evaluation process should be designed to provide ongoing or periodic feedback on the effectiveness or utility of the project in order to promote its continuing improvement. The plan should present the qualifications of the evaluator(s); describe the criteria that would be used to evaluate the project's effectiveness in meeting its objectives; explain how the evaluation would be conducted, including the specific data collection and analysis techniques to be used; discuss why this approach would be appropriate; and present a schedule for completion of the evaluation within the proposed project period.

The evaluation plan should be appropriate to the type of project proposed. For example:

(a) An evaluation approach suited to many research projects is a review by an advisory panel of the research methodology, data collection instruments, preliminary analyses, and products as they are drafted. The panel should be comprised of independent researchers and practitioners representing the perspectives affected by the proposed project.

(b) The most valuable approaches to evaluating educational or training programs reinforce the participants' learning experience while providing useful feedback on the impact of the program and possible areas for improvement. One appropriate evaluation approach is to assess the acquisition of new knowledge, skills, attitudes, or understanding through participant feedback on the seminar or training event. Such feedback might include a self-assessment of what was learned along with the participant's response to the quality and effectiveness of faculty presentations, the format of sessions, the value or usefulness of the material presented, and other relevant factors. Another appropriate approach would be to use an independent observer who might request both verbal and written responses from participants in the program. When an education project involves the development of curricular materials, an advisory panel of relevant experts can be coupled with a test of the curriculum to obtain the reactions of participants and faculty as indicated above.

(c) The evaluation plan for a demonstration project should encompass an assessment of program effectiveness (e.g., how well did it work?); user satisfaction, if appropriate; the cost-effectiveness of the program; a process analysis of the program (e.g., was the program implemented as designed, and/or did it provide the services intended to the targeted population?); the impact of the program (e.g., what effect did the program have on the court, and/or what benefits resulted from the program?); and the replicability of the program or components of the program.

(d) For technical assistance projects, applicants should explain how the quality, timeliness, and impact of the assistance provided would be determined, and develop a mechanism for feedback from both the users and providers of the technical assistance.

Evaluation plans involving human subjects should include a discussion of the procedures for obtaining respondents' informed consent, ensuring the respondents' privacy and freedom from risk or harm, and protecting others who are not the subjects of the evaluation but would be affected by it. Other than the provision of confidentiality to respondents, human subject protection issues ordinarily are not applicable to participants evaluating an education program.

e. Project Management

The applicant should present a detailed management plan, including the starting and completion date for each task; the time commitments to the project of key staff and their responsibilities regarding each project task; and the procedures that would ensure that all tasks are performed on time, within budget, and at the highest level of quality. In preparing the project time line, Gantt Chart, or schedule, applicants should make certain that all project activities, including publication or reproduction of project products and their initial dissemination, would occur within the proposed project period. The management plan must also provide for the submission of Quarterly Progress and Financial Reports within 30 days after the close of each calendar quarter (i.e., no later than January 30, April 30, July 30, and October 30), per section VI.A.13.

Applicants should be aware that the Institute is unlikely to approve a limited extension of the grant period without very good cause. Therefore, the management plan should be as realistic as possible and fully reflect the time commitments of the proposed project staff and consultants.

f. Products

The program narrative in the application should contain a description of the products to be developed (e.g., training curricula and materials, audiotapes, videotapes, DVDs, computer software, CD–ROM disks, articles, guidelines, manuals, reports, handbooks, benchbooks, or books), including when they would be submitted to the Institute. The budget should include the cost of producing and disseminating the product to each in-State SJI library (see Appendix A), State chief justice, State court administrator, and other appropriate judges or court personnel.

(1) *Dissemination Plan.* The application must explain how and to whom the products would be disseminated; describe how they would benefit the State courts, including how they could be used by judges and court personnel; identify development, production, and dissemination costs covered by the project budget; and present the basis on which products and services developed or provided under the grant would be offered to the courts community and the public at large (i.e., whether products would be distributed at no cost to recipients, or if costs are involved, the reason for charging recipients and the estimated price of the product) (see section VI.A.11.b.). Ordinarily, applicants should schedule all product preparation and distribution activities within the project period.

A copy of each product must be sent to the library established in each State to collect the materials developed with Institute support (see Appendix A). Applicants proposing to develop Web-based products should provide for sending a hard-copy document to the SJI-designated libraries and other appropriate audiences to alert them to the availability of the Web site or electronic product (i.e., a written report with a reference to the Web site).

Fifteen (15) copies of all project products must be submitted to the Institute, along with an electronic version in .html or .pdf format.

(2) *Types of Products and Press Releases.* The type of product to be prepared depends on the nature of the project. For example, in most instances, the products of a research, evaluation, or demonstration project should include an article summarizing the project findings that is publishable in a journal serving the courts community nationally, an executive summary that would be disseminated to the project's primary audience, or both. Applicants proposing to conduct empirical research or evaluation projects with national import should describe how they would make their data available for secondary analysis after the grant period (see section VI.A.14.a.).

The curricula and other products developed through education and training projects should be designed for use outside the classroom so that they may be used again by the original participants and others in the course of their duties.

In addition, recipients of project grants must prepare a press release describing the project and announcing the results, and distribute the release to a list of national and State judicial branch organizations. SJI will provide press release guidelines and a list of recipients to grantees at least 30 days before the end of the grant period.

(3) *Institute Review.* Applicants must submit a final draft of all written grant products to the Institute for review and approval at least 30 days before the products are submitted for publication or reproduction. For products in a videotape or CD–ROM format, applicants must provide for Institute review of the product at the treatment, script, rough-cut, and final stages of development, or their equivalents. No grant funds may be obligated for publication or reproduction of a final grant product without the written approval of the Institute (see section VI.A.11.f.).

(4) *Acknowledgment, Disclaimer, and Logo.* Applicants must also include in all project products a prominent acknowledgment that support was received from the Institute and a disclaimer paragraph based on the example provided in section VI.A.11.a.2. in the Guideline. The ''SJI'' logo must appear on the front cover of a written product, or in the opening frames of a video, unless the Institute approves another placement.

g. Applicant Status

An applicant that is not a State or local court and has not received a grant from the Institute within the past three years should state whether it is either a national non-profit organization controlled by, operating in conjunction with, and serving the judicial branches of State governments, or a national non-profit organization for the education and training of State court judges and support personnel (see section II.). If the applicant is a nonjudicial unit of Federal, State, or local government, it must explain whether the proposed services could be adequately provided by non-governmental entities.

h. Staff Capability

The applicant should include a summary of the training and experience of the key staff members and consultants that qualify them for conducting and managing the proposed project. Resumes of identified staff should be attached to the application. If one or more key staff members and consultants are not known at the time of the application, a description of the criteria that would be used to select persons for these positions should be included. The applicant also should identify the person who would be responsible for managing and reporting on the financial aspects of the proposed project.

i. Organizational Capacity

Applicants that have not received a grant from the Institute within the past three years should include a statement describing their capacity to administer grant funds, including the financial systems used to monitor project expenditures (and income, if any), and a summary of their past experience in administering grants, as well as any resources or capabilities that they have that would particularly assist in the successful completion of the project.

Unless requested otherwise, an applicant that has received a grant from the Institute within the past three years should describe only the changes in its organizational capacity, tax status, or

financial capability that may affect its capacity to administer a grant.

If the applicant is a non-profit organization (other than a university), it must also provide documentation of its 501(c) tax-exempt status as determined by the Internal Revenue Service and a copy of a current certified audit report. For purposes of this requirement, ''current'' means no earlier than two years prior to the present calendar year.

If a current audit report is not available, the Institute will require the organization to complete a financial capability questionnaire, which must be signed by a Certified Public Accountant. Other applicants may be required to provide a current audit report, a financial capability questionnaire, or both, if specifically requested to do so by the Institute.

j. Statement of Lobbying Activities

Non-governmental applicants must submit the Institute's Disclosure of Lobbying Activities Form, which documents whether they, or another entity that is a part of the same organization as the applicant, have advocated a position before Congress on any issue, and identifies the specific subjects of their lobbying efforts (see Appendix B).

k. Letters of Cooperation or Support

If the cooperation of courts, organizations, agencies, or individuals other than the applicant is required to conduct the project, the applicant should attach written assurances of cooperation and availability to the application, or send them under separate cover. To ensure sufficient time to bring them to the Board's attention, letters of support sent under separate cover should be received two weeks in advance of the Board meetings which can be seen on the Web site.

4. Budget Narrative

The budget narrative should provide the basis for the computation of all project-related costs. When the proposed project would be partially supported by grants from other funding sources, applicants should make clear what costs would be covered by those other grants. Additional background information or schedules may be attached if they are essential to obtaining a clear understanding of the proposed budget. Numerous and lengthy appendices are strongly discouraged.

The budget narrative should cover the costs of all components of the project and clearly identify costs attributable to the project evaluation. Under OMB grant guidelines incorporated by reference in this Guideline, grant funds may not be used to purchase alcoholic beverages.

a. Justification of Personnel Compensation

The applicant should set forth the percentages of time to be devoted by the individuals who would staff the proposed project, the annual salary of each of those persons, and the number of work days per year used for calculating the percentages of time or daily rates of those individuals. The applicant should explain any deviations from current rates or established written organizational policies. If grant funds are requested to pay the salary and related costs for a current employee of a court or other unit of government, the applicant should explain why this would not constitute a supplantation of State or local funds in violation of 42 U.S.C. 10706(d)(1). An acceptable explanation may be that the position to be filled is a new one established in conjunction with the project or that the grant funds would support only the portion of the employee's time that would be dedicated to new or additional duties related to the project.

b. Fringe Benefit Computation

The applicant should provide a description of the fringe benefits provided to employees. If percentages are used, the authority for such use should be presented, as well as a description of the elements included in the determination of the percentage rate.

c. Consultant/Contractual Services and Honoraria

The applicant should describe the tasks each consultant would perform, the estimated total amount to be paid to each consultant, the basis for compensation rates (e.g., the number of days multiplied by the daily consultant rates), and the method for selection. Rates for consultant services must be set in accordance with section VII.I.2.c. Prior written Institute approval is required for any consultant rate in excess of $800 per day; Institute funds may not be used to pay a consultant more than $1,100 per day. Honorarium payments must be justified in the same manner as consultant payments.

d. Travel

Transportation costs and per diem rates must comply with the policies of the applicant organization. If the applicant does not have an established travel policy, then travel rates must be consistent with those established by the Federal Government. The budget narrative should include an explanation of the rate used, including the components of the per diem rate and the basis for the estimated transportation expenses. The purpose of the travel should also be included in the narrative.

e. Equipment

Grant funds may be used to purchase only the equipment necessary to demonstrate a new technological application in a court or that is otherwise essential to accomplishing the objectives of the project. Equipment purchases to support basic court operations ordinarily will not be approved. The applicant should describe the equipment to be purchased or leased and explain why the acquisition of that equipment is essential to accomplish the project's goals and objectives. The narrative should clearly identify which equipment is to be leased and which is to be purchased. The method of procurement should also be described. Purchases of automated data processing equipment must comply with section VII.I.2.b.

f. Supplies

The applicant should provide a general description of the supplies necessary to accomplish the goals and objectives of the grant. In addition, the applicant should provide the basis for the amount requested for this expenditure category.

g. Construction

Construction expenses are prohibited except for the limited purposes set forth in section VI.A.16.b. Any allowable construction or renovation expense should be described in detail in the budget narrative

h. Telephone

Applicants should include anticipated telephone charges, distinguishing between monthly charges and long distance charges in the budget narrative. Also, applicants should provide the basis used to calculate the monthly and long distance estimates.

i. Postage

Anticipated postage costs for project-related mailings, including distribution of the final product(s), should be described in the budget narrative. The cost of special mailings, such as for a survey or for announcing a workshop, should be distinguished from routine operational mailing costs. The bases for all postage estimates should be included in the budget narrative.

j. Printing/Photocopying

Anticipated costs for printing or photocopying project documents, reports, and publications should be included in the budget narrative, along with the bases used to calculate these estimates.

k. Indirect Costs

Recoverable indirect costs are limited to no more than 75% of a grantee's direct personnel costs, i.e. salaries plus fringe benefits (see section VII.I.4.).

Applicants should describe the indirect cost rates applicable to the grant in detail. If costs often included within an indirect cost rate are charged directly (e.g., a percentage of the time of senior managers to supervise project activities), the applicant should specify that these costs are not included within its approved indirect cost rate. These rates must be established in accordance with section VII.I.4. If the applicant has an indirect cost rate or allocation plan approved by any Federal granting agency, a copy of the approved rate agreement must be attached to the application.

l. Match

Applicants that do not contemplate making matching contributions continuously throughout the course of the project or on a task-by-task basis must provide a schedule within 30 days after the beginning of the project period indicating at what points during the project period the matching contributions would be made (see sections VI.A.8, and VII.E.1.).

5. Submission Requirements

a. Every applicant must submit an original and three copies of the application package consisting of Form A; Form B, if the application is from a State or local court, or a Disclosure of Lobbying Form, if the applicant is not a unit of State or local government; Form C; the Application Abstract; the Program Narrative; the Budget Narrative; and any necessary appendices.

Letters of application may be submitted at any time. Applications received by the first day of the second month in a calendar quarter will be considered at the next Board for that quarter. Please mark PROJECT APPLICATION on the application package envelope and send it to: State Justice Institute, 1650 King Street, Suite 600, Alexandria, VA 22314.

Receipt of each application will be acknowledged by letter or e-mail.

b. Applicants submitting more than one application may include material that would be identical in each application in a cover letter. This material will be incorporated by reference into each application and counted against the 25-page limit for the program narrative. A copy of the cover letter should be attached to each copy of the application.

B. Technical Assistance (TA) Grants

1. Application Procedures

Applicants for TA Grants may submit, at any time, an original and three copies of a detailed letter describing the proposed project, as well as a Forms A, ''State Justice Institute Application'' (see Appendix B) and Form B, Certificate of State Approval from the State Supreme Court, or its designated agency and Form C, ''Project Budget in Tabular Format.'' Letters from regional court associations must be signed by the president of the association. The applications received by the first day of the second month in a calendar quarter will be reviewed in the Board meeting for that quarter.

2. Application Format

Although there is no prescribed form for the letter, or a minimum or maximum page limit, letters of application should include the following information:

a. *Need for Funding*. What is the critical need facing the applicant? How would the proposed technical assistance help the applicant meet this critical need? Why cannot State or local resources fully support the costs of the required consultant services?

b. *Project Description*. What tasks would the consultant be expected to perform, and how would they be accomplished? Which organization or individual would be hired to provide the assistance, and how was this consultant selected? If a consultant has not yet been identified, what procedures and criteria would be used to select the consultant (applicants are expected to follow their jurisdictions' normal procedures for procuring consultant services)? What specific tasks would the consultant(s) and court staff undertake? What is the schedule for completion of each required task and the entire project? How would the applicant oversee the project and provide guidance to the consultant, and who at the court or regional court association would be responsible for coordinating all project tasks and submitting quarterly progress and financial status reports?

If the consultant has been identified, the applicant should provide a letter from that individual or organization documenting interest in and availability for the project, as well as the consultant's ability to complete the assignment within the proposed time frame and for the proposed cost. The consultant must agree to submit a detailed written report to the court and the Institute upon completion of the technical assistance.

c. *Likelihood of Implementation*. What steps have been or would be taken to facilitate implementation of the consultant's recommendations upon completion of the technical assistance? For example, if the support or cooperation of specific court officials or committees, other agencies, funding bodies, organizations, or a court other than the applicant would be needed to adopt the changes recommended by the consultant and approved by the court, how would they be involved in the review of the recommendations and development of the implementation plan?

3. Budget and Matching State Contribution

A completed Form C ''Project Budget, Tabular Format'' and budget narrative must be included with the letter requesting technical assistance.

The budget narrative should provide the basis for all project-related costs, including the basis for determining the estimated consultant costs, if compensation of the consultant is required (e.g., the number of days per task times the requested daily consultant rate). Applicants should be aware that consultant rates above $800 per day must be approved in advance by the Institute, and that no consultant will be paid more than $1,100 per day from Institute funds. In addition, the budget should provide for submission of two copies of the consultant's final report to the Institute.

Recipients of TA Grants do not have to submit an audit report but must maintain appropriate documentation to support expenditures (see section VI.A.3.).

4. Submission Requirements

Letters of application may be submitted at any time and will be considered on a quarterly rolling basis. Applications should be received by the first day of the second month of a calendar quarter in order to be reviewed at the Board meeting for that quarter.

If the support or cooperation of agencies, funding bodies, organizations, or courts other than the applicant would be needed in order for the consultant to perform the required tasks, written assurances of such support or cooperation should accompany the application letter. Support letters also

may be submitted under separate cover; however, to ensure that there is sufficient time to bring them to the attention of the Board's Technical Assistance Grant Committee, letters sent under separate cover must be received by the same date as the technical assistance request being supported.

C. Curriculum Adaptation and Training (CAT) Grants

1. Application Procedures

In lieu of formal applications, applicants should submit an original and three photocopies of a detailed letter as well as a Form A, ''State Justice Institute Application;'' Form B, ''Certificate of State Approval;'' and Form C, ''Project Budget, Tabular Format'' (see Appendices).

2. Application Format

Although there is no prescribed format for the letter, or a minimum or maximum page limit, letters of application should include the following information:

a. For adaptation of a curriculum:

(1) *Project Description.* What is the title of the model curriculum to be adapted and who originally developed it? Why is this education program needed at the present time? What are the project's goals? What are the learning objectives of the adapted curriculum? What program components would be implemented, and what types of modifications, if any, are anticipated in length, format, learning objectives, teaching methods, or content? Who would be responsible for adapting the model curriculum? Who would the participants be, how many would there be, how would they be recruited, and from where would they come (e.g., from a single local jurisdiction, from across the State, from a multi-State region, from across the nation)?

(2) *Need for Funding.* Why are sufficient State or local resources unavailable to fully support the modification and presentation of the model curriculum? What is the potential for replicating or integrating the adapted curriculum in the future using State or local funds, once it has been successfully adapted and tested?

(3) *Likelihood of Implementation.* What is the proposed timeline, including the project start and end dates? On what date(s) would the judicial branch education program be presented? What process would be used to modify and present the program? Who would serve as faculty, and how were they selected? What measures would be taken to facilitate subsequent presentations of the program? [Ordinarily, an independent evaluation of a curriculum adaptation project is not required; however, the results of any evaluation should be included in the final report.]

(4) *Expressions of Interest by Judges and/or Court Personnel.* Does the proposed program have the support of the court system or association leadership, and of judges, court managers, and judicial branch education personnel who are expected to attend? Applicants may demonstrate this by attaching letters of support.

b. For training assistance:

(1) *Need for Funding.* What is the court reform or initiative prompting the need for training? How would the proposed training help the applicant implement planned changes at the court? Why cannot State or local resources fully support the costs of the required training?

(2) *Project Description.* What tasks would the trainer(s) be expected to perform, and how would they be accomplished? Which organization or individual would be hired, if in-house personnel are not the trainers, to provide the training, and how was the trainer selected? If a trainer has not yet been identified, what procedures and criteria would be used to select the trainer? [Note: Applicants are expected to follow their jurisdictions' normal procedures for procuring consultant services.] What specific tasks would the trainer and court staff or regional court association members undertake? What presentation methods will be used? What is the schedule for completion of each required task and the entire project? How would the applicant oversee the project and provide guidance to the trainer, and who at the court or affiliated with the regional court association would be responsible for coordinating all project tasks and submitting quarterly progress and financial status reports?

If the trainer has been identified, the applicant should provide a letter from that individual or organization documenting interest in and availability for the project, as well as the trainer's ability to complete the assignment within the proposed time frame and for the proposed cost. The trainer must agree to submit a detailed written report to the court and the Institute upon completion of the technical assistance.

(3) *Likelihood of Implementation.* What steps have been or would be taken to coordinate the implementation of the new reform, initiative, etc. and the training to support the same? For example, if the support or cooperation of specific court or regional court association officials or committees, other agencies, funding bodies, organizations, or a court other than the applicant would be needed to adopt the reform and initiate the training proposed, how would they be involved in the review of the recommendations and development of the implementation plan?

3. Budget and Matching State Contribution

Applicants should attach a copy of budget Form C and a budget narrative (see subsection A.4. above) that describes the basis for the computation of all project-related costs and the source of the match offered.

4. Submission Requirements

Letters of application may be submitted at any time and will be considered on a quarterly rolling basis. Applications should be received by the first day of the second month of a calendar quarter in order to be reviewed at the Board meeting for that quarter. Dates of Board meetings will be available on the Web site.

For curriculum adaptation requests, applicants should allow at least 90 days between the Board meeting and the date of the proposed program to allow sufficient time for needed planning. Applicants are encouraged to call SJI staff to discuss concerns about timing of submissions.

D. Scholarships

1. Limitations

Applicants may not receive more than one scholarship in a two-year period unless the course specifically assumes multi-year participation or the course is part of a graduate degree program in judicial studies in which the applicant is currently enrolled (neither exception should be taken as a commitment on the part of the SJI Board to approve serial scholarships). Attendance at annual or mid-year meetings of a State or national organization does not qualify as an out-of-State educational program for scholarship purposes, even though it may include workshops or other training sessions.

Scholarship funds may be used only to cover the costs of tuition, transportation, and reasonable lodging expenses (not to exceed $150 per night, including taxes). Transportation expenses may include round-trip coach airfare or train fare. Scholarship recipients are strongly encouraged to take advantage of excursion or other special airfares (e.g., reductions offered when a ticket is purchased 21 days in

advance of the travel date) when making their travel arrangements. Recipients who drive to a program site may receive $.445/mile up to the amount of the advanced-purchase round-trip airfare between their homes and the program sites. Funds to pay tuition, transportation, and lodging expenses in excess of $1,500 and other costs of attending the program—such as meals, materials, transportation to and from airports, and local transportation (including rental cars)—at the program site must be obtained from other sources or borne by the scholarship recipient. Scholarship applicants are encouraged to check other sources of financial assistance and to combine aid from various sources whenever possible. A scholarship is not transferable to another individual. It may be used only for the course specified in the application unless the applicant's request to attend a different course that meets the eligibility requirements is approved in writing by the Institute. Decisions on such requests will be made within 30 days after the receipt of the request letter.

2. Eligibility Requirements

a. *Recipients*. Scholarships can be awarded only to full-time judges of State or local trial and appellate courts; full-time professional, State, or local court personnel with management responsibilities; and supervisory and management probation personnel in judicial branch probation offices. Senior judges, part-time judges, quasi-judicial hearing officers including referees and commissioners, administrative law judges, staff attorneys, law clerks, line staff, law enforcement officers, and other executive branch personnel are not eligible to receive a scholarship.

b. *Courses*. A scholarship can be awarded only for: (1) A course presented in a State other than the one in which the applicant resides or works, or (2) an online course. The course must be designed to enhance the skills of new or experienced judges and court managers; or be offered by a recognized graduate program for judges or court managers.

Applicants are encouraged not to wait for the decision on a scholarship to register for an educational program they wish to attend. SJI does not submit the names of scholarship recipients to educational organizations.

3. Forms

a. *Scholarship Application—Form S1* (Appendix D). The Scholarship Application requests basic information about the applicant and the educational program the applicant would like to attend. It also addresses the applicant's commitment to share the skills and knowledge gained with local court colleagues and to submit an evaluation of the program the applicant attends. The Scholarship Application must bear the original signature of the applicant. Faxed or photocopied signatures will not be accepted. Please be sure to indicate whether the State will be providing funds for the project and, if so, how much. SJI cannot supplant State funds for these scholarships: It can only provide funding above the amount to be covered by the State.

b. *Scholarship Application Concurrence—Form S2* (Appendix D). Judges and court managers applying for scholarships must submit the written concurrence of the Chief Justice of the State's Supreme Court (or the Chief Justice's designee) on the Institute's Judicial Education Scholarship Concurrence form (see Appendix D). The signature of the presiding judge of the applicant's court cannot be substituted for that of the Chief Justice or the Chief Justice's designee. Court managers, other than elected clerks of court, also must submit a letter of support from their immediate supervisors.

4. Submission Requirements

Scholarship applications may be submitted at any time but will be reviewed on a quarterly basis. This means scholarships will be awarded on a ''first come, first considered'' basis, although the Institute will attempt to award programs equitably over the year. The dates for applications to be received by the Institute are February 1, May 1, August 1, and November 1. (These are NOT mailing deadlines. The applications must be received by the Institute by each of these dates.) No exceptions or extensions will be granted. All the required items must be received for an application to be considered. If the Concurrence form or letter of support is sent separately from the application, the postmark date of the last item to be sent will be used in determining the review date.

All applications should be sent by mail or courier (not fax or e-mail) to: Scholarship Program Coordinator, State Justice Institute, 1650 King Street, Suite 600, Alexandria, VA 22314.

E. Partner Grants

SJI and its funding partners may meld, pick and choose, or waive their application procedures, grant cycles, or grant requirements to expedite the award of jointly-funded grants targeted at emerging or high priority problems confronting State and local courts. As often as not, SJI may solicit brief proposals from potential grantees to shop among fellow financial partners as a first step. Should SJI be chosen as the lead grant manager, Project Grant application procedures will apply to the proposed Partner Grant. As with Project Grants, Partner Grants will be targeted at initiatives likely to have a significant national impact.

V. Application Review Procedures

A. Preliminary Inquiries

The Institute staff will answer inquiries concerning application procedures. The staff contact will be named in the Institute's letter or e-mail acknowledging receipt of the application.

B. Selection Criteria

1. Project Grant Applications

a. Project Grant applications will be rated on the basis of the criteria set forth below. The Institute will accord the greatest weight to the following criteria:

(1) The soundness of the methodology;

(2) The demonstration of need for the project;

(3) The appropriateness of the proposed evaluation design;

(4) If applicable, the key findings and recommendations of the most recent evaluation and the proposed responses to those findings and recommendations;

(5) The applicant's management plan and organizational capabilities;

(6) The qualifications of the project's staff;

(7) The products and benefits resulting from the project, including the extent to which the project will have long-term benefits for State courts across the nation;

(8) The degree to which the findings, procedures, training, technology, or other results of the project can be transferred to other jurisdictions;

(9) The reasonableness of the proposed budget; and

(10) The demonstration of cooperation and support of other agencies that may be affected by the project.

(11) The proposed project's relationship to one of the Special Interest Criteria and Categories set forth in section III.A.

b. In determining which projects to support, the Institute will also consider whether the applicant is a State court, a national court support or education organization, a non-court unit of government, or other type of entity eligible to receive grants under the Institute's enabling legislation (see section II.); the availability of financial assistance from other sources for the

project; the amount of the applicant's match; the extent to which the proposed project would also benefit the Federal courts or help State courts enforce Federal constitutional and legislative requirements; and the level of appropriations available to the Institute in the current year and the amount expected to be available in succeeding fiscal years.

2. Technical Assistance (TA) Grant Applications

TA Grant applications will be rated on the basis of the following criteria:

a. Whether the assistance would address a critical need of the applicant;

b. The soundness of the technical assistance approach to the problem;

c. The qualifications of the consultant(s) to be hired or the specific criteria that will be used to select the consultant(s);

d. The commitment of the court or association to act on the consultant's recommendations; and

e. The reasonableness of the proposed budget.

The Institute also will consider factors such as the level and nature of the match that would be provided, diversity of subject matter, geographic diversity, the level of appropriations available to the Institute in the current year, and the amount expected to be available in succeeding fiscal years.

3. Curriculum Adaptation and Training (CAT) Grant Applications

CAT Grant applications will be rated on the basis of the following criteria:

a. For curriculum adaptation projects:

(1) The goals and objectives of the proposed project;

(2) The need for outside funding to support the program;

(3) The appropriateness of the approach in achieving the project's educational objectives;

(4) The likelihood of effective implementation and integration of the modified curriculum into ongoing educational programming; and

(5) Expressions of interest by the judges and/or court personnel who would be directly involved in or affected by the project.

b. For training assistance:

(1) Whether the training would address a critical need of the court or association;

(2) The soundness of the training approach to the problem;

(3) The qualifications of the trainer(s) to be hired or the specific criteria that will be used to select the trainer(s);

(4) The commitment of the court or association to the training program; and

(5) The reasonableness of the proposed budget.

The Institute will also consider factors such as the reasonableness of the amount requested, compliance with match requirements, diversity of subject matter, geographic diversity, the level of appropriations available in the current year, and the amount expected to be available in succeeding fiscal years.

4. Scholarships

Scholarships will be approved only for programs that either (1) Enhance the skills of judges and court managers; or (2) are part of a graduate degree program for judges or court personnel. Scholarships will be awarded on the basis of:

a. The date on which the application and concurrence (and support letter, if required) were sent (''first come, first considered'');

b. The unavailability of State or local funds or scholarship funds from another source to cover the costs of attending the program, or participating online;

c. The absence of educational programs in the applicant's State addressing the topic(s) covered by the educational program for which the scholarship is being sought;

d. Geographic balance among the recipients;

e. The balance of scholarships among educational providers and programs;

f. The balance of scholarships among the types of courts and court personnel (trial judge, appellate judge, trial court administrator) represented; and

g. The level of appropriations available to the Institute in the current year and the amount expected to be available in succeeding fiscal years.

The postmark or courier receipt will be used to determine the date on which the application form and other required items were sent.

5. Partner Grants

The selection criteria for Partner Grants will be driven by the collective priorities of the Institute and other organizations and their collective assessments regarding the needs and capabilities of court and court-related organizations. Having settled on priorities, the Institute and its financial partners will likely contact the courts or court-related organizations most acceptable as pilots, laboratories, consultants, or the like. Should the Institute be chosen as the lead grant manager, Project application review procedures will apply to the proposed Partner Grant.

C. Review and Approval Process

1. Project Grant Applications

The Institute's Board of Directors will review the applications competitively. The Institute staff will prepare a narrative summary and a rating sheet assigning points for each relevant selection criterion. The staff will present the narrative summaries and rating sheets to the Board for its review. The Board will review all application summaries and decide which projects it will fund. The decision to fund a project is solely that of the Board of Directors.

The Chairman of the Board will sign approved awards on behalf of the Institute.

2. Technical Assistance (TA) and Curriculum Adaptation and Training (CAT) Grant Applications

The Institute staff will prepare a narrative summary of each application and a rating sheet assigning points for each relevant selection criterion. The Board of Directors may delegate its authority to approve TA and CAT Grants to the committee established for each program. The Board or the committee will review the applications competitively.

The Chairman of the Board will sign approved awards on behalf of the Institute.

3. Scholarships

A committee of the Institute's Board of Directors will review scholarship applications quarterly. The Board of Directors has delegated its authority to approve scholarships to the committee established for the program. The committee will review the applications competitively. In the event of a tie vote, the Chairman will serve as the tie-breaker.

The Chairman of the Board will sign approved awards on behalf of the Institute.

4. Partner Grants

The Institute's internal process for the review and approval of Partner Grants will depend upon negotiations with fellow financiers. The Institute may use its procedures, a partner's procedures, a mix of both, or entirely unique procedures. All Partner Grants will be approved by the Board of Directors on whatever schedule makes sense at the time.

D. Return Policy

Unless a specific request is made, unsuccessful applications will not be returned. Applicants are advised that Institute records are subject to the provisions of the Federal Freedom of Information Act, 5 U.S.C. 552.

E. Notification of Board Decision

The Institute will send written notice to applicants concerning all Board

decisions to approve, defer, or deny their respective applications. For all applications (except scholarships), the Institute also will convey the key issues and questions that arose during the review process. A decision by the Board to deny an application may not be appealed, but it does not prohibit resubmission of a proposal based on that application in a subsequent funding cycle. The Institute will also notify the State court administrator when grants are approved by the Board to support projects that will be conducted by or involve courts in that State.

F. Response to Notification of Approval

With the exception of those approved for scholarships, applicants have 30 days from the date of the letter notifying them that the Board has approved their application to respond to any revisions requested by the Board. If the requested revisions (or a reasonable schedule for submitting such revisions) have not been submitted to the Institute within 30 days after notification, the approval may be rescinded and the application presented to the Board for reconsideration. In the event an issue will only be resolved after award, such as the selection of a consultant, the final award document will include a Special Condition that will require additional grantee reporting and Institute review and approval. Special Conditions, in the form of incentives or sanctions, may also be used in situations where past poor performance by a grantee necessitates increased grant oversight.

VI. Compliance Requirements

The State Justice Institute Act contains limitations and conditions on grants, contracts, and cooperative agreements awarded by the Institute. The Board of Directors has approved additional policies governing the use of Institute grant funds. These statutory and policy requirements are set forth below.

A. Recipients of Project Grants

1. Advocacy

No funds made available by the Institute may be used to support or conduct training programs for the purpose of advocating particular nonjudicial public policies or encouraging nonjudicial political activities (42 U.S.C. 10706(b)).

2. Approval of Key Staff

If the qualifications of an employee or consultant assigned to a key project staff position are not described in the application or if there is a change of a person assigned to such a position, the recipient must submit a description of the qualifications of the newly assigned person to the Institute. Prior written approval of the qualifications of the new person assigned to a key staff position must be received from the Institute before the salary or consulting fee of that person and associated costs may be paid or reimbursed from grant funds (see section VIII.A.7.).

3. Audit

Recipients of project grants must provide for an annual fiscal audit which includes an opinion on whether the financial statements of the grantee present fairly its financial position and its financial operations are in accordance with generally accepted accounting principles (see section VII.K. for the requirements of such audits). Scholarship recipients, Curriculum Adaptation and Training Grants, and Technical Assistance Grants are not required to submit an audit, but they must maintain appropriate documentation to support all expenditures (see section VIII.K.).

4. Budget Revisions

Budget revisions among direct cost categories that: (a) Transfer grant funds to an unbudgeted cost category, or (b) individually or cumulatively exceed five percent of the approved original budget or the most recently approved revised budget require prior Institute approval (see section VIII.A.1.).

5. Conflict of Interest

Personnel and other officials connected with Institute-funded programs must adhere to the following requirements:

a. No official or employee of a recipient court or organization shall participate personally through decision, approval, disapproval, recommendation, the rendering of advice, investigation, or otherwise in any proceeding, application, request for a ruling or other determination, contract, grant, cooperative agreement, claim, controversy, or other particular matter in which Institute funds are used, where, to his or her knowledge, he or she or his or her immediate family, partners, organization other than a public agency in which he or she is serving as officer, director, trustee, partner, or employee or any person or organization with whom he or she is negotiating or has any arrangement concerning prospective employment, has a financial interest.

b. In the use of Institute project funds, an official or employee of a recipient court or organization shall avoid any action which might result in or create the appearance of:

(1) Using an official position for private gain; or

(2) Affecting adversely the confidence of the public in the integrity of the Institute program.

c. Requests for proposals or invitations for bids issued by a recipient of Institute funds or a subgrantee or subcontractor will provide notice to prospective bidders that the contractors who develop or draft specifications, requirements, statements of work, and/or requests for proposals for a proposed procurement will be excluded from bidding on or submitting a proposal to compete for the award of such procurement.

6. Inventions and Patents

If any patentable items, patent rights, processes, or inventions are produced in the course of Institute-sponsored work, such fact shall be promptly and fully reported to the Institute. Unless there is a prior agreement between the grantee and the Institute on disposition of such items, the Institute shall determine whether protection of the invention or discovery shall be sought. The Institute will also determine how the rights in the invention or discovery, including rights under any patent issued thereon, shall be allocated and administered in order to protect the public interest consistent with ''Government Patent Policy'' (President's Memorandum for Heads of Executive Departments and Agencies, February 18, 1983, and statement of Government Patent Policy).

7. Lobbying

a. Funds awarded to recipients by the Institute shall not be used, indirectly or directly, to influence Executive Orders or similar promulgations by Federal, State or local agencies, or to influence the passage or defeat of any legislation by Federal, State or local legislative bodies (42 U.S.C. 10706(a)).

b. It is the policy of the Board of Directors to award funds only to support applications submitted by organizations that would carry out the objectives of their applications in an unbiased manner. Consistent with this policy and the provisions of 42 U.S.C. 10706, the Institute will not knowingly award a grant to an applicant that has, directly or through an entity that is part of the same organization as the applicant, advocated a position before Congress on the specific subject matter of the application.

8. Matching Requirements

All grantees other than scholarship recipients are required to provide a match. A match is the portion of project costs not borne by the Institute. Match

includes both cash and in-kind contributions. Cash match is the direct outlay of funds by the grantee or a third party to support the project. Examples of cash match are the dedication of funds to support a new employee or purchase new equipment to carry out the project or the application of project income (e.g., tuition or the proceeds of sales of grant products) generated during the grant period to grant costs. In-kind match consists of contributions of time and/or services of current staff members, space, supplies, etc., made to the project by the grantee or others (e.g., advisory board members) working directly on the project or that portion of the grantee's Federally approved indirect cost rate that exceeds the Guideline's limit of permitted charges (75% of salaries and benefits).

Under normal circumstances, allowable match may be incurred only during the project period. When appropriate, and with the prior written permission of the Institute, match may be incurred from the date of the Board of Directors' approval of an award. Match does not include the time of participants attending an education program. The amount and nature of required match depends on the type of grant (see section III.).

The grantee is responsible for ensuring that the total amount of match proposed is actually contributed. If a proposed contribution is not fully met, the Institute may reduce the award amount accordingly, in order to maintain the ratio originally provided for in the award agreement (see section VII.E.1.).

The Board of Directors looks favorably upon any unrequired match contributed by applicants when making grant decisions. The match requirement may be waived in exceptionally rare circumstances upon the request of the Chief Justice of the highest court in the State or the highest ranking official in the requesting organization and approval by the Board of Directors (42 U.S.C. 10705(d)). The Board of Directors encourages all applicants to provide the maximum amount of cash and in-kind match possible, even if a waiver is approved. The amount and nature of match are criteria in the grant selection process (see section V.B.1.b.).

9. Nondiscrimination

No person may, on the basis of race, sex, national origin, disability, color, or creed be excluded from participation in, denied the benefits of, or otherwise subjected to discrimination under any program or activity supported by Institute funds. Recipients of Institute funds must immediately take any measures necessary to effectuate this provision.

10. Political Activities

No recipient may contribute or make available Institute funds, program personnel, or equipment to any political party or association, or the campaign of any candidate for public or party office. Recipients are also prohibited from using funds in advocating or opposing any ballot measure, initiative, or referendum. Officers and employees of recipients shall not intentionally identify the Institute or recipients with any partisan or nonpartisan political activity associated with a political party or association, or the campaign of any candidate for public or party office (42 U.S.C. 10706(a)).

11. Products

a. Acknowledgment, Logo, and Disclaimer

(1) Recipients of Institute funds must acknowledge prominently on all products developed with grant funds that support was received from the Institute. The ''SJI'' logo must appear on the front cover of a written product, or in the opening frames of a video product, unless another placement is approved in writing by the Institute. This includes final products printed or otherwise reproduced during the grant period, as well as reprintings or reproductions of those materials following the end of the grant period. A camera-ready logo sheet is available from the Institute upon request.

(2) Recipients also must display the following disclaimer on all grant products: ''This [document, film, videotape, etc.] was developed under [grant/cooperative agreement] number SJI-[insert number] from the State Justice Institute. The points of view expressed are those of the [author(s), filmmaker(s), etc.] and do not necessarily represent the official position or policies of the State Justice Institute.''

b. Charges for Grant-Related Products/ Recovery of Costs

(1) When Institute funds fully cover the cost of developing, producing, and disseminating a product (e.g., a report, curriculum, videotape, or software), the product should be distributed to the field without charge. When Institute funds only partially cover the development, production, or dissemination costs, the grantee may, with the Institute's prior written approval, recover its costs for developing, producing, and disseminating the material to those requesting it, to the extent that those costs were not covered by Institute funds or grantee matching contributions.

(2) Applicants should disclose their intent to sell grant-related products in the application. Grantees must obtain the written prior approval of the Institute of their plans to recover project costs through the sale of grant products. Written requests to recover costs ordinarily should be received during the grant period and should specify the nature and extent of the costs to be recouped, the reason that such costs were not budgeted (if the rationale was not disclosed in the approved application), the number of copies to be sold, the intended audience for the products to be sold, and the proposed sale price. If the product is to be sold for more than $25, the written request also should include a detailed itemization of costs that will be recovered and a certification that the costs were not supported by either Institute grant funds or grantee matching contributions.

(3) In the event that the sale of grant products results in revenues that exceed the costs to develop, produce, and disseminate the product, the revenue must continue to be used for the authorized purposes of the Institute-funded project or other purposes consistent with the State Justice Institute Act that have been approved by the Institute (see section VII.G.).

c. Copyrights

Except as otherwise provided in the terms and conditions of an Institute award, a recipient is free to copyright any books, publications, or other copyrightable materials developed in the course of an Institute-supported project, but the Institute shall reserve a royalty-free, nonexclusive and irrevocable right to reproduce, publish, or otherwise use, and to authorize others to use, the materials for purposes consistent with the State Justice Institute Act.

d. Due Date

All products and, for TA and CAT grants, consultant and/or trainer reports (see section VI.B.1 & 2) are to be completed and distributed (see below) not later than the end of the award period, not the 90-day close out period. The latter is only intended for grantee final reporting and to liquidate obligations (see section VII.L.).

e. Distribution

In addition to the distribution specified in the grant application, grantees shall send:

(1) Fifteen (15) copies of each final product developed with grant funds to the Institute, unless the product was developed under either a Technical Assistance or a Curriculum Adaptation and Training Grant, in which case submission of 2 copies is required;

(2) An electronic version of the product in .html or .pdf format to the Institute; and

(3) One copy of each final product developed with grant funds to the library established in each State to collect materials prepared with Institute support. A list of the libraries is contained in Appendix A. Labels for these libraries are available on the Institute's Web site, *http://www.statejustice.org.*

(4) Bound copies of products, where possible and cost-effective, rather than hard copies in ring binders, to SJI depository libraries. Grantees that develop Web-based electronic products must send a hard-copy document to the SJI-designated libraries and other appropriate audiences to alert them to the availability of the Web site or electronic product. Recipients of Technical Assistance and Curriculum Adaptation and Training Grants are not required to submit final products to State libraries. (5) A press release describing the project and announcing the results to a list of national and State judicial branch organizations provided by the Institute.

f. Institute Approval

No grant funds may be obligated for publication or reproduction of a final product developed with grant funds without the written approval of the Institute. Grantees shall submit a final draft of each written product to the Institute for review and approval. The draft must be submitted at least 30 days before the product is scheduled to be sent for publication or reproduction to permit Institute review and incorporation of any appropriate changes required by the Institute. Grantees must provide for timely reviews by the Institute of videotape, DVD or CD–ROM products at the treatment, script, rough cut, and final stages of development or their equivalents.

g. Original Material

All products prepared as the result of Institute-supported projects must be originally-developed material unless otherwise specified in the award documents. Material not originally developed that is included in such products must be properly identified, whether the material is in a verbatim or extensive paraphrase format.

12. Prohibition Against Litigation Support

No funds made available by the Institute may be used directly or indirectly to support legal assistance to parties in litigation, including cases involving capital punishment.

13. Reporting Requirements

a. Recipients of Institute funds other than scholarships must submit Quarterly Progress and Financial Status Reports within 30 days of the close of each calendar quarter (that is, no later than January 30, April 30, July 30, and October 30). The Quarterly Progress Reports shall include a narrative description of project activities during the calendar quarter, the relationship between those activities and the task schedule and objectives set forth in the approved application or an approved adjustment thereto, any significant problem areas that have developed and how they will be resolved, and the activities scheduled during the next reporting period. Failure to comply with the requirements of this provision could result in the termination of a grantee's award.

b. The quarterly Financial Status Report must be submitted in accordance with section VII.H.2. of this Guideline. A final project Progress Report and Financial Status Report shall be submitted within 90 days after the end of the grant period in accordance with section VII.L.1. of this Guideline.

14. Research

a. Availability of Research Data for Secondary Analysis

Upon request, grantees must make available for secondary analysis a diskette(s) or data tape(s) containing research and evaluation data collected under an Institute grant and the accompanying code manual. Grantees may recover the actual cost of duplicating and mailing or otherwise transmitting the data set and manual from the person or organization requesting the data. Grantees may provide the requested data set in the format in which it was created and analyzed.

b. Confidentiality of Information

Except as provided by Federal law other than the State Justice Institute Act, no recipient of financial assistance from SJI may use or reveal any research or statistical information furnished under the Act by any person and identifiable to any specific private person for any purpose other than the purpose for which the information was obtained. Such information and copies thereof shall be immune from legal process, and shall not, without the consent of the person furnishing such information, be admitted as evidence or used for any purpose in any action, suit, or other judicial, legislative, or administrative proceedings.

c. Human Subject Protection

Human subjects are defined as individuals who are participants in an experimental procedure or who are asked to provide information about themselves, their attitudes, feelings, opinions, and/or experiences through an interview, questionnaire, or other data collection technique. All research involving human subjects shall be conducted with the informed consent of those subjects and in a manner that will ensure their privacy and freedom from risk or harm and the protection of persons who are not subjects of the research but would be affected by it, unless such procedures and safeguards would make the research impractical. In such instances, the Institute must approve procedures designed by the grantee to provide human subjects with relevant information about the research after their involvement and to minimize or eliminate risk or harm to those subjects due to their participation.

15. State and Local Court Applications

Each application for funding from a State or local court must be approved, consistent with State law, by the State's Supreme Court, or its designated agency or council. The Supreme Court or its designee shall receive, administer, and be accountable for all funds awarded on the basis of such an application (42 U.S.C. 10705(b)(4)). See section VII.C.2.

16. Supplantation and Construction

To ensure that funds are used to supplement and improve the operation of State courts, rather than to support basic court services, funds shall not be used for the following purposes:

a. To supplant State or local funds supporting a program or activity (such as paying the salary of court employees who would be performing their normal duties as part of the project, or paying rent for space which is part of the court's normal operations);

b. To construct court facilities or structures, except to remodel existing facilities or to demonstrate new architectural or technological techniques, or to provide temporary facilities for new personnel or for personnel involved in a demonstration or experimental program; or

c. Solely to purchase equipment.

17. Suspension or Termination of Funding

After providing a recipient reasonable notice and opportunity to submit written documentation demonstrating why fund termination or suspension should not occur, the Institute may terminate or suspend funding of a project that fails to comply substantially with the Act, the Guideline, or the terms and conditions of the award (42 U.S.C. 10708(a)).

18. Title to Property

At the conclusion of the project, title to all expendable and nonexpendable personal property purchased with Institute funds shall vest in the recipient court, organization, or individual that purchased the property if certification is made to and approved by the Institute that the property will continue to be used for the authorized purposes of the Institute-funded project or other purposes consistent with the State Justice Institute Act. If such certification is not made or the Institute disapproves such certification, title to all such property with an aggregate or individual value of $1,000 or more shall vest in the Institute, which will direct the disposition of the property.

B. Recipients of Technical Assistance (TA) and Curriculum Adaptation and Training (CAT) Grants

Recipients of TA and CAT Grants must comply with the requirements listed in section VI.A. (except the requirements pertaining to audits in subsection A.3. above and product dissemination and approval in subsection A.11.e. and f. above) and the reporting requirements below:

1. Technical Assistance (TA) Grant Reporting Requirements

Recipients of TA Grants must submit to the Institute one copy of a final report that explains how it intends to act on the consultant's recommendations, as well as two copies of the consultant's written report.

2. Curriculum Adaptation and Training (CAT) Grant Reporting Requirements

Recipients of CAT Grants must submit one copy of the agenda or schedule, outline of presentations and/or relevant instructor's notes, copies of overhead transparencies, power point presentations, or other visual aids, exercises, case studies and other background materials, hypotheticals, quizzes, and other materials involving the participants, manuals, handbooks, conference packets, evaluation forms, and suggestions for replicating the program, including possible faculty or the preferred qualifications or experience of those selected as faculty, developed under the grant at the conclusion of the grant period, along with a final report that includes any evaluation results and explains how the grantee intends to present the educational program in the future, as well as two copies of the consultant's or trainer's report.

C. Scholarship Recipients

1. Scholarship recipients are responsible for disseminating the information received from the course to their court colleagues locally and, if possible, throughout the State (e.g., by developing a formal seminar, circulating the written material, or discussing the information at a meeting or conference).

Recipients also must submit to the Institute a certificate of attendance at the program, an evaluation of the educational program they attended, and a copy of the notice of any scholarship funds received from other sources. A copy of the evaluation must be sent to the Chief Justice of the scholarship recipient's State. A State or local jurisdiction may impose additional requirements on scholarship recipients.

2. To receive the funds authorized by a scholarship award, recipients must submit a Scholarship Payment Voucher (Form S3) together with a tuition statement from the program sponsor, a transportation fare receipt (or statement of the driving mileage to and from the recipient's home to the site of the educational program), and a lodging receipt.

Scholarship Payment Vouchers must be submitted within 90 days after the end of the course, which the recipient attended.

3. Scholarship recipients are encouraged to check with their tax advisors to determine whether the scholarship constitutes taxable income under Federal and State law.

D. Partner Grants

The compliance requirements for Partner Grant recipients will depend upon the agreements struck between the grant financiers and between lead financiers and grantees. Should SJI be the lead, the compliance requirements for Project Grants will apply.

VII. Financial Requirements

A. Purpose

The purpose of this section is to establish accounting system requirements and offer guidance on procedures to assist all grantees, subgrantees, contractors, and other organizations in:

1. Complying with the statutory requirements for the award, disbursement, and accounting of funds;

2. Complying with regulatory requirements of the Institute for the financial management and disposition of funds;

3. Generating financial data to be used in planning, managing, and controlling projects; and

4. Facilitating an effective audit of funded programs and projects.

B. References

Except where inconsistent with specific provisions of this Guideline, the following circulars are applicable to Institute grants and cooperative agreements under the same terms and conditions that apply to Federal grantees. The circulars supplement the requirements of this section for accounting systems and financial record-keeping and provide additional guidance on how these requirements may be satisfied (circulars may be obtained on the OMB Web site at *http://www.whitehouse.gov/omb*).

1. *Office of Management and Budget (OMB) Circular A–21,* Cost Principles for Educational Institutions.

2. *Office of Management and Budget (OMB) Circular A–87,* Cost Principles for State and Local Governments.

3. *Office of Management and Budget (OMB) Circular A–102,* Uniform Administrative Requirements for Grants-in-Aid to State and Local Governments.

4. *Office of Management and Budget (OMB) Circular A–110,* Grants and Agreements with Institutions of Higher Education, Hospitals and Other Non-Profit Organizations.

5. *Office of Management and Budget (OMB) Circular A–122,* Cost Principles for Non-profit Organizations.

6. *Office of Management and Budget (OMB) Circular A–133,* Audits of States, Local Governments and Non-profit Organizations.

C. Supervision and Monitoring Responsibilities

1. Grantee Responsibilities

All grantees receiving awards from the Institute are responsible for the management and fiscal control of all funds. Responsibilities include accounting for receipts and expenditures, maintaining adequate financial records, and refunding expenditures disallowed by audits.

2. Responsibilities of State Supreme Court

a. Each application for funding from a State or local court must be approved,

consistent with State law, by the State's Supreme Court, or its designated agency or council.

b. The State Supreme Court or its designee shall receive all Institute funds awarded to such courts; be responsible for assuring proper administration of Institute funds; and be responsible for all aspects of the project, including proper accounting and financial record-keeping by the subgrantee.

These responsibilities include:

(1) *Reviewing Financial Operations.* The State Supreme Court or its designee should be familiar with, and periodically monitor, its subgrantees' financial operations, records system, and procedures. Particular attention should be directed to the maintenance of current financial data.

(2) *Recording Financial Activities.* The subgrantee's grant award or contract obligation, as well as cash advances and other financial activities, should be recorded in the financial records of the State Supreme Court or its designee in summary form. Subgrantee expenditures should be recorded on the books of the State Supreme Court or evidenced by report forms duly filed by the subgrantee. Matching contributions provided by subgrantees should likewise be recorded, as should any project income resulting from program operations.

(3) *Budgeting and Budget Review.* The State Supreme Court or its designee should ensure that each subgrantee prepares an adequate budget as the basis for its award commitment. The State Supreme Court should maintain the details of each project budget on file.

(4) *Accounting for Match.* The State Supreme Court or its designee will ensure that subgrantees comply with the match requirements specified in this Guideline (see section VI.A.8.).

(5) *Audit Requirement.* The State Supreme Court or its designee is required to ensure that subgrantees meet the necessary audit requirements set forth by the Institute (see sections K. below and VI.A.3.).

(6) *Reporting Irregularities.* The State Supreme Court, its designees, and its subgrantees are responsible for promptly reporting to the Institute the nature and circumstances surrounding any financial irregularities discovered.

D. Accounting System

The grantee is responsible for establishing and maintaining an adequate system of accounting and internal controls and for ensuring that an adequate system exists for each of its subgrantees and contractors. An acceptable and adequate accounting system:

1. Properly accounts for receipt of funds under each grant awarded and the expenditure of funds for each grant by category of expenditure (including matching contributions and project income);

2. Assures that expended funds are applied to the appropriate budget category included within the approved grant;

3. Presents and classifies historical costs of the grant as required for budgetary and evaluation purposes;

4. Provides cost and property controls to assure optimal use of grant funds;

5. Is integrated with a system of internal controls adequate to safeguard the funds and assets covered, checks the accuracy and reliability of the accounting data, promotes operational efficiency, and assures conformance with any general or special conditions of the grant;

6. Meets the prescribed requirements for periodic financial reporting of operations; and

7. Provides financial data for planning, control, measurement, and evaluation of direct and indirect costs.

E. Total Cost Budgeting and Accounting

Accounting for all funds awarded by the Institute must be structured and executed on a ''*Total Project Cost*'' basis. That is, total project costs, including Institute funds, State and local matching shares, and any other fund sources included in the approved project budget serve as the foundation for fiscal administration and accounting. Grant applications and financial reports require budget and cost estimates on the basis of total costs.

1. Timing of Matching Contributions

Matching contributions need not be applied at the exact time of the obligation of Institute funds. Ordinarily, the full matching share must be obligated during the award period; however, with the written permission of the Institute, contributions made following approval of the grant by the Institute's Board of Directors but before the beginning of the grant may be counted as match. Grantees that do not contemplate making matching contributions continuously throughout the course of a project, or on a task-by-task basis, are required to submit a schedule within 30 days after the beginning of the project period indicating at what points during the project period the matching contributions will be made. If a proposed cash or in-kind match is not fully met, the Institute may reduce the award amount accordingly to maintain the ratio of grant funds to matching funds stated in the award agreement.

2. Records for Match

All grantees must maintain records that clearly show the source, amount, and timing of all matching contributions. In addition, if a project has included, within its approved budget, contributions which exceed the required matching portion, the grantee must maintain records of those contributions in the same manner as it does Institute funds and required matching shares. For all grants made to State and local courts, the State Supreme Court has primary responsibility for grantee/subgrantee compliance with the requirements of this section (see subsection C.2. above).

F. Maintenance and Retention of Records

All financial records, including supporting documents, statistical records, and all other information pertinent to grants, subgrants, cooperative agreements, or contracts under grants, must be retained by each organization participating in a project for at least three years for purposes of examination and audit. State Supreme Courts may impose record retention and maintenance requirements in addition to those prescribed in this section.

1. Coverage

The retention requirement extends to books of original entry, source documents supporting accounting transactions, the general ledger, subsidiary ledgers, personnel and payroll records, canceled checks, and related documents and records. Source documents include copies of all grant and subgrant awards, applications, and required grantee/subgrantee financial and narrative reports. Personnel and payroll records shall include the time and attendance reports for all individuals reimbursed under a grant, subgrant or contract, whether they are employed full-time or part-time. Time and effort reports are required for consultants.

2. Retention Period

The three-year retention period starts from the date of the submission of the final expenditure report.

3. Maintenance

Grantees and subgrantees are expected to see that records of different fiscal years are separately identified and maintained so that requested information can be readily located. Grantees and subgrantees are also obligated to protect records adequately

against fire or other damage. When records are stored away from the grantee's/subgrantee's principal office, a written index of the location of stored records should be on hand, and ready access should be assured.

4. Access

Grantees and subgrantees must give any authorized representative of the Institute access to and the right to examine all records, books, papers, and documents related to an Institute grant.

G. Project-Related Income

Records of the receipt and disposition of project-related income must be maintained by the grantee in the same manner as required for the project funds that gave rise to the income and must be reported to the Institute (see subsection H.2. below). The policies governing the disposition of the various types of project-related income are listed below.

1. Interest

A State and any agency or instrumentality of a State, including institutions of higher education and hospitals, shall not be held accountable for interest earned on advances of project funds. When funds are awarded to subgrantees through a State, the subgrantees are not held accountable for interest earned on advances of project funds. Local units of government and nonprofit organizations that are grantees must refund any interest earned. Grantees shall ensure minimum balances in their respective grant cash accounts.

2. Royalties

The grantee/subgrantee may retain all royalties received from copyrights or other works developed under projects or from patents and inventions, unless the terms and conditions of the grant provide otherwise.

3. Registration and Tuition Fees

Registration and tuition fees may be considered as cash match with the prior written approval of the Institute. Estimates of registration and tuition fees, and any expenses to be offset by the fees, should be included in the application budget forms and narrative.

4. Income From the Sale of Grant Products

If the sale of products occurs during the project period, the income may be treated as cash match with the prior written approval of the Institute. The costs and income generated by the sales must be reported on the Quarterly Financial Status Reports and documented in an auditable manner. Whenever possible, the intent to sell a product should be disclosed in the application or reported to the Institute in writing once a decision to sell products has been made. The grantee must request approval to recover its product development, reproduction, and dissemination costs as specified in section VI.A.11.b.

5. Other

Other project income shall be treated in accordance with disposition instructions set forth in the grant's terms and conditions.

H. Payments and Financial Reporting Requirements

1. Payment of Grant Funds

The procedures and regulations set forth below are applicable to all Institute grant funds and grantees.

a. *Request for Advance or Reimbursement of Funds.* Grantees will receive funds on a ''check-issued'' basis. Upon receipt, review, and approval of a Request for Advance or Reimbursement by the Institute, a check will be issued directly to the grantee or its designated fiscal agent. A request must be limited to the grantee's immediate cash needs. The Request for Advance or Reimbursement, along with the instructions for its preparation, will be included in the official Institute award package.

b. *Termination of Advance and Reimbursement Funding.* When a grantee organization receiving cash advances from the Institute:

(1) Demonstrates an unwillingness or inability to attain program or project goals, or to establish procedures that will minimize the time elapsing between cash advances and disbursements, or cannot adhere to guideline requirements or special conditions;

(2) Engages in the improper award and administration of subgrants or contracts; or

(3) Is unable to submit reliable and/or timely reports; the Institute may terminate advance financing and require the grantee organization to finance its operations with its own working capital. Payments to the grantee shall then be made by check to reimburse the grantee for actual cash disbursements. In the event the grantee continues to be deficient, the Institute may suspend reimbursement payments until the deficiencies are corrected. In extreme cases, grants may be terminated.

c. *Principle of Minimum Cash on Hand.* Grantees should request funds based upon immediate disbursement requirements. Grantees should time their requests to ensure that cash on hand is the minimum needed for disbursements to be made immediately or within a few days.

2. Financial Reporting

a. *General Requirements.* To obtain financial information concerning the use of funds, the Institute requires that grantees/subgrantees submit timely reports for review.

b. *Due Dates and Contents.* A Financial Status Report is required from all grantees, other than scholarship recipients, for each active quarter on a calendar-quarter basis. This report is due within 30 days after the close of the calendar quarter. It is designed to provide financial information relating to Institute funds, State and local matching shares, project income, and any other sources of funds for the project, as well as information on obligations and outlays. A copy of the Financial Status Report, along with instructions for its preparation, is included in each official Institute Award package. If a grantee requests substantial payments for a project prior to the completion of a given quarter, the Institute may request a brief summary of the amount requested, by object class, to support the Request for Advance or Reimbursement.

3. Consequences of Non-Compliance With Submission Requirement

Failure of the grantee to submit required financial and progress reports may result in suspension or termination of grant payments.

I. Allowability of Costs

1. General

Except as may be otherwise provided in the conditions of a particular grant, cost allowability is determined in accordance with the principles set forth in *OMB Circulars A–21,* Cost Principles Applicable to Grants and Contracts with Educational Institutions; *A–87,* Cost Principles for State and Local Governments; and *A–122,* Cost Principles for Non-profit Organizations.

No costs may be recovered to liquidate obligations incurred after the approved grant period. Circulars may be obtained on the OMB Web site at *http://www.whitehouse.gov/omb.*

2. Costs Requiring Prior Approval

a. *Pre-agreement Costs.* The written prior approval of the Institute is required for costs considered necessary but which occur prior to the start date of the project period.

b. *Equipment.* Grant funds may be used to purchase or lease only that equipment essential to accomplishing the goals and objectives of the project.

The written prior approval of the Institute is required when the amount of automated data processing (ADP) equipment to be purchased or leased exceeds $10,000 or software to be purchased exceeds $3,000.

c. *Consultants.* The written prior approval of the Institute is required when the rate of compensation to be paid a consultant exceeds $800 a day. Institute funds may not be used to pay a consultant more than $1,100 per day.

d. *Budget Revisions.* Budget revisions among direct cost categories that (i) Transfer grant funds to an unbudgeted cost category or (ii) individually or cumulatively exceed five percent (5%) of the approved original budget or the most recently approved revised budget require prior Institute approval (see section VIII.A.1.).

3. Travel Costs

Transportation and per diem rates must comply with the policies of the grantee. If the grantee does not have an established written travel policy, then travel rates must be consistent with those established by the Institute or the Federal Government. Institute funds may not be used to cover the transportation or per diem costs of a member of a national organization to attend an annual or other regular meeting of that organization.

4. Indirect Costs

These are costs of an organization that are not readily assignable to a particular project but are necessary to the operation of the organization and the performance of the project. The cost of operating and maintaining facilities, depreciation, and administrative salaries are examples of the types of costs that are usually treated as indirect costs. Although the Institute's policy requires all costs to be budgeted directly, it will accept indirect costs if a grantee has an indirect cost rate approved by a Federal agency as set forth below. However, recoverable indirect costs are limited to no more than 75% of a grantee's direct personnel costs (salaries plus fringe benefits).

a. *Approved Plan Available.*

(1) A copy of an indirect cost rate agreement or allocation plan approved for a grantee during the preceding two years by any Federal granting agency on the basis of allocation methods substantially in accord with those set forth in the applicable cost circulars must be submitted to the Institute.

(2) Where flat rates are accepted in lieu of actual indirect costs, grantees may not also charge expenses normally included in overhead pools, e.g., accounting services, legal services, building occupancy and maintenance, etc., as direct costs.

b. *Establishment of Indirect Cost Rates.* To be reimbursed for indirect costs, a grantee must first establish an appropriate indirect cost rate. To do this, the grantee must prepare an indirect cost rate proposal and submit it to the Institute within three months after the start of the grant period to assure recovery of the full amount of allowable indirect costs. The rate must be developed in accordance with principles and procedures appropriate to the type of grantee institution involved as specified in the applicable OMB Circular.

c. *No Approved Plan.* If an indirect cost proposal for recovery of indirect costs is not submitted to the Institute within three months after the start of the grant period, indirect costs will be irrevocably disallowed for all months prior to the month that the indirect cost proposal is received.

J. Procurement and Property Management Standards

1. Procurement Standards

For State and local governments, the Institute has adopted the standards set forth in Attachment O of *OMB Circular A–102.* Institutions of higher education, hospitals, and other non-profit organizations will be governed by the standards set forth in Attachment O of *OMB Circular A–110.*

2. Property Management Standards

The property management standards as prescribed in Attachment N of *OMB Circulars A–102* and *A–110* apply to all Institute grantees and subgrantees except as provided in section VI.A.18. All grantees/subgrantees are required to be prudent in the acquisition and management of property with grant funds. If suitable property required for the successful execution of projects is already available within the grantee or subgrantee organization, expenditures of grant funds for the acquisition of new property will be considered unnecessary.

K. Audit Requirements

1. Implementation

Each recipient of a Project Grant must provide for an annual fiscal audit. This requirement also applies to a State or local court receiving a subgrant from the State Supreme Court. The audit may be of the entire grantee or subgrantee organization or of the specific project funded by the Institute. Audits conducted in accordance with the Single Audit Act of 1984 and *OMB Circular A–133*, will satisfy the requirement for an annual fiscal audit. The audit must be conducted by an independent Certified Public Accountant, or a State or local agency authorized to audit government agencies. Grantees must send two copies of the audit report to the Institute. Grantees that receive funds from a Federal agency and satisfy audit requirements of the cognizant Federal agency must submit two copies of the audit report prepared for that Federal agency to the Institute in order to satisfy the provisions of this section.

2. Resolution and Clearance of Audit Reports

Timely action on recommendations by responsible management officials is an integral part of the effectiveness of an audit. Each grantee must have policies and procedures for acting on audit recommendations by designating officials responsible for: (1) Follow-up, (2) maintaining a record of the actions taken on recommendations and time schedules, (3) responding to and acting on audit recommendations, and (4) submitting periodic reports to the Institute on recommendations and actions taken.

3. Consequences of Non-Resolution of Audit Issues

Ordinarily, the Institute will not make a subsequent grant award to an applicant that has an unresolved audit report involving Institute awards. Failure of the grantee to resolve audit questions may also result in the suspension or termination of payments for active Institute grants to that organization.

L. Close-Out of Grants

1. Grantee Close-Out Requirements

Within 90 days after the end date of the grant or any approved extension thereof (see subsection L.2. below), the following documents must be submitted to the Institute by grantees (other than scholarship recipients):

a. *Financial Status Report.* The final report of expenditures must have no unliquidated obligations and must indicate the exact balance of unobligated funds. Any unobligated/unexpended funds will be deobligated from the award by the Institute. Final payment requests for obligations incurred during the award period must be submitted to the Institute prior to the end of the 90-day close-out period. Grantees on a check-issued basis, who have drawn down funds in excess of their obligations/expenditures, must return any unused funds as soon as it is determined that the funds are not

required. In no case should any unused funds remain with the grantee beyond the submission date of the final Financial Status Report.

b. *Final Progress Report.* This report should describe the project activities during the final calendar quarter of the project and the close-out period, including to whom project products have been disseminated; provide a summary of activities during the entire project; specify whether all the objectives set forth in the approved application or an approved adjustment have been met and, if any of the objectives have not been met, explain why not; and discuss what, if anything, could have been done differently that might have enhanced the impact of the project or improved its operation. These reporting requirements apply at the conclusion of every grant other than a scholarship.

2. Extension of Close-Out Period

Upon the written request of the grantee, the Institute may extend the close-out period to assure completion of the grantee's close-out requirements. Requests for an extension must be submitted at least 14 days before the end of the close-out period and must explain why the extension is necessary and what steps will be taken to assure that all the grantee's responsibilities will be met by the end of the extension period.

VIII. Grant Adjustments

All requests for programmatic or budgetary adjustments requiring Institute approval must be submitted by the project director in a timely manner (ordinarily 30 days prior to the implementation of the adjustment being requested). All requests for changes from the approved application will be carefully reviewed for both consistency with this Guideline and the enhancement of grant goals and objectives. Failure to submit adjustments in a timely manner may result in the termination of a grantee's award.

A. Grant Adjustments Requiring Prior Written Approval

The following grant adjustments require the prior written approval of the Institute:

1. Budget revisions among direct cost categories that (a) Transfer grant funds to an unbudgeted cost category or (b) individually or cumulatively exceed five percent (5%) of the approved original budget or the most recently approved revised budget (see section VII.I.2.d.).

2. A change in the scope of work to be performed or the objectives of the project (see subsection D. below).

3. A change in the project site.

4. A change in the project period, such as an extension of the grant period and/or extension of the final financial or progress report deadline (see subsection E. below).

5. Satisfaction of special conditions, if required.

6. A change in or temporary absence of the project director (see subsections F. and G. below).

7. The assignment of an employee or consultant to a key staff position whose qualifications were not described in the application, or a change of a person assigned to a key project staff position (see section VI.A.2.).

8. A change in or temporary absence of the person responsible for managing and reporting on the grant's finances.

9. A change in the name of the grantee organization.

10. A transfer or contracting out of grant-supported activities (see subsection H. below).

11. A transfer of the grant to another recipient.

12. Preagreement costs (see section VII.I.2.a.).

13. The purchase of automated data processing equipment and software (see section VII.I.2.b.).

14. Consultant rates (see section VII.I.2.c.).

15. A change in the nature or number of the products to be prepared or the manner in which a product would be distributed.

B. Requests for Grant Adjustments

All grantees must promptly notify their SJI program managers, in writing, of events or proposed changes that may require adjustments to the approved project design. In requesting an adjustment, the grantee must set forth the reasons and basis for the proposed adjustment and any other information the program manager determines would help the Institute's review.

C. Notification of Approval/Disapproval

If the request is approved, the grantee will be sent a Grant Adjustment signed by the Executive Director or his or her designee. If the request is denied, the grantee will be sent a written explanation of the reasons for the denial.

D. Changes in the Scope of the Grant

Major changes in scope, duration, training methodology, or other significant areas must be approved in advance by the Institute. A grantee may make minor changes in methodology, approach, or other aspects of the grant to expedite achievement of the grant's objectives with subsequent notification of the SJI program manager.

E. Date Changes

A request to change or extend the grant period must be made at least 30 days in advance of the end date of the grant. A revised task plan should accompany a request for an extension of the grant period, along with a revised budget if shifts among budget categories will be needed. A request to change or extend the deadline for the final financial report or final progress report must be made at least 14 days in advance of the report deadline (see section VII.L.2.).

F. Temporary Absence of the Project Director

Whenever an absence of the project director is expected to exceed a continuous period of one month, the plans for the conduct of the project director's duties during such absence must be approved in advance by the Institute. This information must be provided in a letter signed by an authorized representative of the grantee/subgrantee at least 30 days before the departure of the project director, or as soon as it is known that the project director will be absent. The grant may be terminated if arrangements are not approved in advance by the Institute.

G. Withdrawal of/Change in Project Director

If the project director relinquishes or expects to relinquish active direction of the project, the Institute must be notified immediately. In such cases, if the grantee/subgrantee wishes to terminate the project, the Institute will forward procedural instructions upon notification of such intent. If the grantee wishes to continue the project under the direction of another individual, a statement of the candidate's qualifications should be sent to the Institute for review and approval. The grant may be terminated if the qualifications of the proposed individual are not approved in advance by the Institute.

H. Transferring or Contracting Out of Grant-Supported Activities

No principal activity of a grant-supported project may be transferred or contracted out to another organization without specific prior approval by the Institute. All such arrangements must be formalized in a contract or other written agreement between the parties involved. Copies of the proposed contract or agreement must be submitted for prior

approval of the Institute at the earliest possible time. The contract or agreement must state, at a minimum, the activities to be performed, the time schedule, the policies and procedures to be followed, the dollar limitation of the agreement, and the cost principles to be followed in determining what costs, both direct and indirect, will be allowed. The contract or other written agreement must not affect the grantee's overall responsibility for the direction of the project and accountability to the Institute.

State Justice Institute Board of Directors

Robert A. Miller, Chairman, Chief Justice (ret.), Supreme Court of South Dakota, Pierre, SD.

Joseph F. Baca, Vice Chairman, Chief Justice (ret.), New Mexico Supreme Court, Albuquerque, NM.

Sandra A. O'Connor, Secretary, States Attorney of Baltimore County, (ret.), Towson, MD.

Keith McNamara, Esq., Executive Committee Member, McNamara & McNamara, Columbus, OH.

Terrence B. Adamson, Esq., Executive Vice President, The National Geographic Society, Washington, DC.

Robert N. Baldwin, Executive Vice President and General Counsel, National Center for State Courts, Richmond, VA.

Carlos R. Garza, Esq., Administrative Judge (ret.), Round Rock, TX.

Sophia H. Hall, Administrative Presiding Judge, Circuit Court of Cook County, Chicago, IL.

Tommy Jewell, Presiding Children's Court Judge (ret.), Albuquerque, NM.

Arthur A. McGiverin, Chief Justice (ret.), Albuquerque, NM.

Janice T. Munsterman, Executive Director (ex officio).

Janice Munsterman,

Executive Director.

Appendix A—SJI Libraries: Designated Sites and Contacts

Alabama

Supreme Court Library

Mr. Timothy A. Lewis, State Law Librarian, Alabama Supreme Court, Judicial Building, 300 Dexter Avenue, Montgomery, AL 36104, (334) 242–4347, *director@alalinc.net.*

Alaska

Anchorage Law Library

Ms. Cynthia S. Fellows, State Law Librarian, Alaska State Court Law Library, 303 K Street, Anchorage, AK 99501, (907) 264–0583, *cfellows@courts.state.ak.us.*

Arizona

Supreme Court Library

Ms. Lani Orosco, Staff Assistant, Arizona Supreme Court, Staff Attorney's Office Library, 1501 W. Washington, Suite 445, Phoenix, AZ 85007, (602) 542–5028, *lorosco@supreme.sp.state.az.us.*

Arkansas

Administrative Office of the Courts

Mr. James D. Gingerich, Director, Administrative Office of the Courts, Supreme Court of Arkansas, Justice Building, 625 Marshall Street, Little Rock, AR 72201, (501) 682–9400, *jd.gingerich@arkansas.gov.*

California

Administrative Office of the Courts

Mr. William C. Vickrey, Administrative Director of the Courts, Administrative Office of the Courts, 455 Golden Gate Avenue, San Francisco, CA 94102, (415) 865–4235, *william.vickrey@jud.ca.gov.*

Colorado

Supreme Court Library

Ms. Linda Gruenthal, Deputy Supreme Court Law Librarian, 2 East 14th Avenue, Denver, CO 80203, (303) 837–3720, *cscltech@state.co.us.*

Connecticut

State Library

Ms. Denise D. Jernigan, Law Librarian, Connecticut State Library, 231 Capitol Avenue, Hartford, CT 06106, (860) 757–6598, *djernigan@cslib.org.*

Delaware

Administrative Office of the Courts

Mr. Michael E. McLaughlin, Deputy Director, Administrative Office of the Courts, Carvel State Office Building, 820 North French Street, 11th Floor, P.O. Box 8911, Wilmington, DE 19801, (302) 577–8481, *michael.mclaughlin@state.de.us.*

District of Columbia

Executive Office, District of Columbia Courts

Ms. Anne B. Wicks, Executive Officer, District of Columbia Courts, 500 Indiana Avenue, NW., Suite 1500, Washington, DC 20001, (202) 879–1700, *Wicksab@dcsc.gov.*

Florida

Administrative Office of the Courts

Ms. Elisabeth H. Goodner, State Courts Administrator, Office of the State Courts Administrator, Florida Supreme Court, Supreme Court Building, 500 South Duval Street, Tallahassee, FL 32399, (850) 922–5081, *goodnerl@flcourts.org.*

Georgia

Administrative Office of the Courts

Mr. David Ratley, Director, Administrative Office of the Courts, 244 Washington Street SW., Suite 300, Atlanta, GA 30334, (404) 656–5171, *ratleydl@gaaoc.us.*

Hawaii

Supreme Court Library

Ms. Ann Koto, State Law Librarian, The Supreme Court Law Library, 417 South King St., Room 119, Honolulu, HI 96813, (808) 539–4964, *Ann.S.Koto@courts.state.hi.us.*

Idaho

AOC Judicial Education Library/State Law Library

Mr. Richard Visser, State Law Librarian, Idaho State Law Library, Supreme Court Building, 451 West State St., Boise, ID 83720, (208) 334–3316, *lawlibrary@isc.state.id.us.*

Illinois

Supreme Court Library

Ms. Brenda Larison, Supreme Court of Illinois Library, 200 East Capitol Avenue, Springfield, IL 62701–1791, (217) 782–2425, *blarison@court.state.il.us.*

Indiana

Supreme Court Library

Ms. Terri L. Ross, Supreme Court Librarian, Supreme Court Library, State House, Room 316, Indianapolis, IN 46204, (317) 232–2557, *tross@courts.state.in.us.*

Iowa

Administrative Office of the Court

Dr. Jerry K. Beatty, Director of Judicial Branch Education, Iowa Judicial Branch, Iowa Judicial Branch Building, 1111 East Court Avenue, Des Moines, IA 50319, (515) 242–0190, *jerry.beatty@jb.state.ia.us.*

Kansas

Supreme Court Library

Mr. Fred Knecht, Law Librarian, Kansas Supreme Court Library, Kansas Judicial Center, 301 S.W. 10th Avenue, Topeka, KS 66612, (785) 296–3257, *knechtf@kscourts.org.*

Kentucky

State Law Library

Ms. Vida Vitagliano, Cataloging and Research Librarian, Kentucky Supreme Court Library, 700 Capitol Avenue, Suite 200, Frankfort, KY 40601, (502) 564–4185, *vidavitagliano@mail.aoc.state.ky.us.*

Louisiana

State Law Library

Ms. Carol Billings, Director, Louisiana Law Library, Louisiana Supreme Court Building, 400 Royal Street, New Orleans, LA 70130, (504) 310–2401, *cbillings@lasc.org.*

Maine

State Law and Legislative Reference Library

Ms. Lynn E. Randall, State Law Librarian, 43 State House Station, Augusta, ME 04333, (207) 287–1600, *lynn.randall@legislature.maine.gov.*

Maryland

State Law Library

Mr. Steve Anderson, Director, Maryland State Law Library, Court of Appeal Building, 361 Rowe Boulevard, Annapolis, MD 21401, (410) 260–1430, *steve.anderson@courts.state.md.us.*

Massachusetts

Middlesex Law Library

Ms. Linda Hom, Librarian, Middlesex Law Library, Superior Court House, 40 Thorndike Street, Cambridge, MA 02141, (617) 494–4148, *midlawlib@yahoo.com.*

Michigan

Michigan Judicial Institute

Dawn F. McCarty, Director, Michigan Judicial Institute, P.O. Box 30205, Lansing, MI 48909, (517) 373–7509, *mccartyd@courts.mi.gov.*

Minnesota

State Law Library (Minnesota Judicial Center)

Ms. Barbara L. Golden, State Law Librarian, G25 Minnesota Judicial Center, 25 Rev. Dr. Martin Luther King Jr. Boulevard, St. Paul, MN 55155, (612) 297–2089, *barb.golden@courts.state.mn.us.*

Mississippi

Mississippi Judicial College

Hon. Leslie G. Johnson, Executive Director, Mississippi Judicial College, P.O. Box 8850, University, MS 38677, (662) 915–5955, *lwleslie@olemiss.edu.*

Montana

State Law Library

Ms. Judith Meadows, State Law Librarian, State Law Library of Montana, P.O. Box 203004, Helena, MT 59620, (406) 444–3660, *jmeadows@mt.gov.*

Nebraska

Administrative Office of the Courts

Mr. Philip D. Gould, Director, Judicial Branch Education, Administrative Office of the Courts/Probation, 521 South 14th St., Suite 200, Lincoln, NE 68508–2707, (402) 471–3072 (office)/(402) 471–3071 (fax), *pgould@nsc.state.ne.us.*

Nevada

Ms. Kathleen Harrington, Law Librarian, Nevada Supreme Court Law Library, 201 S. Carson Street, Suite 100, Carson City, Nevada 89701–4702, (775) 684–1715.

New Hampshire

New Hampshire Law Library

Ms. Mary Searles, Technical Services Law Librarian, New Hampshire Law Library, Supreme Court Building, One Noble Drive, Concord, NH 03301–6160, (603) 271–3777, *msearles@courts.state.nh.us.*

New Jersey

New Jersey State Library

Mr. Thomas O'Malley, Supervising Law Librarian, New Jersey State Law Library, 185 West State Street, P.O. Box 520, Trenton, NJ 08625–0250, (609) 292–6230, *tomalley@njstatelib.org.*

New Mexico

Supreme Court Library

Mr. Thaddeus Bejnar, Librarian, Supreme Court Library, Post Office Drawer L, Santa Fe, NM 87504, (505) 827–4850.

New York

Supreme Court Library

Ms. Barbara Briggs, Law Librarian, Syracuse Supreme Court Law Library, 401 Montgomery Street, Syracuse, NY 13202, (315) 671–1150, *bbriggs@courts.state.ny.us.*

North Carolina

Supreme Court Library

Mr. Thomas P. Davis, Librarian, North Carolina Supreme Court Library, 500 Justice Building, 2 East Morgan Street, Raleigh, NC 27601, (919) 733–3425, *tpd@sc.state.nc.us.*

North Dakota

Supreme Court Library

Ms. Marcella Kramer, Assistant Law Librarian, Supreme Court Law Library, 600 East Boulevard Avenue, Dept. 182, 2nd Floor Judicial Wing, Bismarck, ND 58505–0540, (701) 328–2229, *mkramer@ndcourts.com.*

Northern Mariana Islands

Supreme Court of the Northern Mariana Islands

Ms. Margarita M. Palacios, Director of Courts, Supreme Court of the Commonwealth of the Northern Mariana Islands, P.O. Box 502165, Saipan, MP 96950, (670) 235–9700, *supremecourt@saipan.com.*

Ohio

Supreme Court Library

Mr. Ken Kozlowski, Director, Law Library, Supreme Court of Ohio, 65 South Front Street, 11th Floor, Columbus, OH 43215–3431, (614) 387–9666, *kozlowsk@sconet.state.oh.us.*

Oklahoma

Administrative Office of the Courts

Mr. Michael D. Evans, State Court Administrator, Administrative Office of the Courts, 1915 North Stiles Avenue, Suite 305, Oklahoma City, OK 73105, (405) 521–2450, *mike.evans@oscn.net.*

Oregon

Administrative Office of the Courts

Ms. Kingsley W. Click, State Court Administrator, Oregon Judicial Department, Supreme Court Building, 1163 State Street, Salem, OR 97301, (503) 986–5500, *kingsley.w.click@ojd.state.or.us.*

Pennsylvania

State Library of Pennsylvania

Ms. Kathleen Kline, Collection Management Librarian, State Library of Pennsylvania, Bureau of State Library, 333 Market Street, Harrisburg, PA 17126–1745, (717) 787–5718, *kakline@state.pa.us.*

Puerto Rico

Office of Court Administration

Alfredo Rivera-Mendoza, Esq., Director, Area of Planning and Management, Office of Court Administration, P.O. Box 917, Hato Rey, PR 00919.

Rhode Island

Roger Williams University

Ms. Gail Winson, Director of Law Library/Associate Professor of Law, Roger Williams University, School of Law Library, 10 Metacom Avenue, Bristol, RI 02809, (401) 254–4531, *gwinson@law.rwu.edu.*

South Carolina

Coleman Karesh Law Library (University of South Carolina School of Law)

Mr. Steve Hinckley, Director, Coleman Karesh Law Library, University of South Carolina, Main and Green Streets, Columbia, SC 29208, (803) 777–5944, *hinckley@law.sc.edu.*

South Dakota

State Law Library

Librarian, South Dakota State Law Library, 500 East Capitol, Pierre, South Dakota 57501, (605) 773–4898, *donnis.deyo@ujs.state.sd.ud.*

Tennessee

Tennessee State Law Library

Hon. Cornelia A. Clark, Executive Director, Administrative Office of the Courts, 511 Union Street, Suite 600, Nashville, TN 37219, (615) 741–2687, *cclark@tscmail.state.tn.us.*

Texas

State Law Library

Mr. Marcelino A. Estrada, Director, State Law Library, P.O. Box 12367, Austin, TX 78711, (512) 463–1722, *tony.estrada@sll.state.tx.us.*

U.S. Virgin Islands

Library of the Territorial Court of the Virgin Islands (St. Thomas)

Librarian, The Library, Territorial Court of the Virgin Islands, Post Office Box 70, Charlotte Amalie, St. Thomas, Virgin Islands 00804.

Utah

Utah State Judicial Administration Library

Ms. Jessica Van Buren, Utah State Library, 450 South State Street, P.O. Box 140220, Salt Lake City, UT 84114–0220, (801) 238–7991, *jessicavb@e-mail.utcourts.gov.*

Vermont

Supreme Court of Vermont

Mr. Paul J. Donovan, Law Librarian, Vermont Department of Libraries, 109 State Street, Pavilion Office Building, Montpelier, VT 05609, (802) 828–3268, *paul.donovan@dol.state.vt.us.*

Virginia

Administrative Office of the Courts

Ms. Gail Warren, State Law Librarian, Virginia State Law Library, Supreme Court of Virginia, 100 North Ninth Street, 2nd Floor, Richmond, VA 23219–2335, (804) 786–2075, *gwarren@courts.state.va.us.*

Washington

Washington State Law Library

Ms. Kay Newman, State Law Librarian, Washington State Law Library, Temple of Justice, P.O. Box 40751, Olympia, WA 98504–0751, (360) 357–2136 *kay.newman@courts.wa.gov.*

West Virginia

Supreme Court of Appeals Library

Ms. Kaye Maerz, State Law Librarian, West Virginia Supreme Court of Appeals Library, 1900 Kanawha Boulevard East, Building 1,

Room E–404, Charleston, WV 25305, (304) 558–2607, *kaye.maerz@courts.wv.org.*

Wisconsin

State Law Library

Ms. Jane Colwin, State Law Librarian, State Law Library, 120 M.L.K. Jr. Boulevard, Madison, WI 53703, (608) 261–2340, *jane.colwin@wicourts.gov.*

Wyoming

Wyoming State Law Library

Ms. Kathy Carlson, Law Librarian, Wyoming State Law Library, Supreme Court Building, 2301 Capitol Avenue, Cheyenne, WY 82002, (307) 777–7509, *Kcarlson@courts.state.wy.us.*

National

American Judicature Society

Ms. Deborah Sulzbach, Acquisitions Librarian, Drake University, Law Library, Opperman Hall, 2507 University Avenue, Des Moines, IA 50311–4505, (515) 271–3784, *deborah.sulzbach@drake.edu.*

National Center for State Courts

Ms. Joan Cochet, Library Specialist, National Center for State Courts, 300 Newport Avenue, Williamsburg, VA 23185–4147, (757) 259–1826, *library@ncsc.dni.us.*

National Judicial College

Mr. Randall Snyder, Law Librarian, National Judicial College, Judicial College Building MS 358, Reno, NV 89557, (775) 327–8278, *snyder@judges.org.*

BILLING CODE 6820–SC–P

Appendix B—Grant Application Forms

STATE JUSTICE INSTITUTE
APPLICATION

1. APPLICANT
a. Organization Name _____
b. Street/P.O. Box _____
c. City _____
d. State _____ e. Zip Code _____
f. Phone Number _____
g. Fax Number _____
h. Web Site Address _____
i. Name & Phone Number of Contact Person _____
j. Title _____
k. E-Mail Address _____

2. TYPE OF APPLICANT (Check appropriate box)

□ State Court
□ National organization operating in conjunction with State court
□ National State court support organization
□ College or university
□ Other non-profit organization or agency
□ Individual
□ Corporation or partnership
□ Other unit of government
□ Other _____
(Specify) _____

3. PROPOSED START DATE _____

4. PROJECT DURATION (months) _____

5. APPLICANT FINANCIAL CONTACT
a. Organization Name _____
b. Street/P.O. Box _____
c. City _____
d. State _____ e. Zip Code _____
f. Phone Number _____
g. Fax Number _____
h. Web Site Address _____
i. Name & Phone Number of Contact Person _____
j. Title _____
k. E-Mail Address _____

6. IF THIS APPLICATION HAS BEEN SUBMITTED TO OTHER FUNDING SOURCES, PLEASE PROVIDE THE FOLLOWING INFORMATION:
Source _____
Date Submitted _____
Amount Requested _____
Disposition (if any) or Current Status _____

7. a. AMOUNT REQUESTED FRON SJI $ _____
b. AMOUNT OF MATCH
Cash match $ _____
Non-cash Match $ _____
c. TOTAL MATCH $ _____
d. OTHER CASH $ _____
e. TOTAL PROJECT COST $ _____

8. TITLE OF PROPOSED PROJECT

9. CONGRESSIONAL DISTRICT OF: _____ _____
Name of Representative; District Number — Project location (if different from applicant location): Name of Representative; District Number

10. CERTIFICATION
On behalf of the applicant, I hereby certify that to the best of my knowledge the information in this application is true and complete. I have read the attached assurances (Form D) and understand that if this application is approved for funding, the award will be subject to those assurances. I certify that the applicant will comply with the assurances if the application is approved, and that I am lawfully authorized to make these representations on the behalf of the applicant.

_____ _____ _____
SIGNATURE OF RESPONSIBLE OFFICIAL — TITLE — DATE
(For applications from State and local courts, Form B - Certificate of State Approval, must be attached)

STATE JUSTICE INSTITUTE
INSTRUCTIONS FOR APPLICATION FORM A

1. Legal **name of applicant** (court, entity or individual); **name of the organizational unit**, if any, that will conduct the project; complete **address** of the applicant, including phone and fax numbers and website addresses; and name, phone number, title, and e-mail address of a **contact person** who can provide further information about this application.

2. Type of Applicant:

   a. **State court** includes all appellate, general jurisdiction, limited jurisdiction, and special jurisdiction courts, as well as all offices that are supervised by, or report for, administrative purposes to the chief or presiding justice or judge, or his or her designee.

   b. **National organizations operating in conjunction with State court** include national non-profit organization controlled by, operating in conjunction with, and serving State courts.

   c. **National state court support organization** include national non-profit organizations with primary mission of supporting, serving, or educating judges and other personnel of the judicial branch of State government.

   d. **College or university** includes all institutions of higher education.

   e. **Other non-profit organization or agency** includes those non-profit organizations and private agencies not included in sub-paragraphs (b)-(d).

   f. **Individual** means a person not applying in conjunction with or on behalf of an entity identified in one of the other categories.

   g. **Corporation or partnership** includes for-profit and not-for-profit entities not falling within one of the other categories.

   h. **Other unit of government** includes any governmental agency, office, or organization that is not a State or local court.

3. The **proposed start date** of the project should be the earliest feasible date on which applicant will be able to begin project activities following the date of award (example: 08/01/2007).

4. **Project duration** refers to the number of months the applicant estimates will be needed to complete all project tasks after the proposed start date.

5. The **applicant financial contact** is the court or organization employee that will administer and account for any funding awarded.

6. If this application, or an application requesting support for the same project or a similar project, has been previously submitted to another funding source (Federal or private), enter the name of the **source**, the **date** of submission, the **amount** of funding sought, and the **disposition** (if any) or current status.

7. Requested funding:

   a. Insert the **amount requested** from the State Justice Institute to conduct the project.

   b. The **amount of match** is the amount, if any, to be contributed to the project by the applicant, a unit of State or local government, or private sources. See 42 U.S.C. 10705 (d).

   Cash match refers to funds directly contributed by the applicant, a unit of State or local government, or private sources to support the project.

   Non-cash match refers to in-kind contributions by the applicant, a unit of State or local government or private sources to support the project.

   c. **Total match** refers to the sum of the cash and in-kind contributions to the project.

   d. **Other cash** refers to other funds that may not serve as a match but can be used for a project.

   e. **Total project cost** represents the sum of the amount requested from the Institute and all other contributions to the project.

8. The **title of the proposed project** should reflect the objectives of the activities to be conducted.

9. Enter the name of the applicant's Congressional Representative and the number of the applicant's **Congressional district**, along with the number of the Congressional district(s) in which most of the project activities will take place and the name(s) of the Representative(s) from those districts. If the project activities are not site-specific (for example, a series of training workshops that will bring together participants from around the State, the country, or from a particular region), enter *Statewide*, *national*, or *regional*, as appropriate, in the space provided.

10. **Signature** and title of a duly authorized representative of the applicant and the **date** the application was signed. For applications from State and local courts, Form B, Certificate of State Approval, must be attached.

STATE JUSTICE INSTITUTE

Certificate of State Approval

The _____
Name of State Supreme Court or Designated Agency or Council

has reviewed the application entitled _____

prepared by _____,
Name of Applicant

approves its submission to the State Justice Institute, and

☐ agrees to receive and administer and be accountable for all funds awarded by the Institute pursuant to the application.

☐ designates _____
Name of Trial or Appellate Court or Agency

as the entity to receive, administer, and be accountable for all funds awarded by the Institute pursuant to the application.

_____ _____
Signature *Date*

_____
Name

_____
Title

INSTRUCTIONS

The State Justice Act requires that:

Each application for funding by a State or local court shall be approved, consistent with State law, by the State's Supreme Court, or its designated agency or council, which shall receive, administer, and be accountable for all funds awarded by the Institute to such courts. 42 U.S.C. 10705(b)(4).

FORM B should be signed by the Chief Judge or Chief Justice of the State Supreme Court, or by the director of the designated agency or chair of the designated council.

The term "State Supreme Court" refers to the court of last resort of a State. "Designated agency or council" refers to the office or judicial body which is authorized under State law or by delegation from the State Supreme Court to approve applications for funds and to receive, administer, and be accountable for those funds.

STATE JUSTICE INSTITUTE

PROJECT BUDGET

(TABULAR FORMAT)

Applicant:
Project Title:
For Project Activity from/to:
Total Amount Requested for Project from SJI:

ITEM	SJI FUNDS	STATE FUNDS	FEDERAL FUNDS	APPLICANT FUNDS	OTHER FUNDS	IN-KIND FUNDS	TOTAL
Direct Costs							
Personnel							$ -
Fringe Benefits							$ -
Consultant / Contractual							$ -
Travel							$ -
Equipment							$ -
Supplies							$ -
Telephone							$ -
Postage							$ -
Printing / Photocopying							$ -
Audit							$ -
Other (specify)							$ -
Subtotal, Direct Costs	$ -	$ -	$ -	$ -	$ -	$ -	$ -
Subtotal, Indirect Costs							$ -
Grand Total	$ -	$ -	$ -	$ -	$ -	$ -	$ -

Remarks:

Application Budget Instructions

If the proposed project period is for more than 12 months, separate totals should be submitted for each succeeding twelve-month period or portion thereof beyond 12 months. However, a grand total project budget must also be included for multi-year projects. In addition to Form C, applicants must provide a detailed budget narrative that explains the basis for the estimates in each budget category. If the applicant is requesting indirect costs and has an indirect cost rate that has been approved by a Federal agency, the basis for that rate, together with a copy of the letter or other official document stating that it has been approved, should be attached. Recoverable indirect costs are limited to no more than 75% of personnel and fringe benefit costs. If matching funds from other sources are being sought, the source, current status of the request, and anticipated decision date must be provided.

STATE JUSTICE INSTITUTE

ASSURANCES

The applicant hereby assures and certifies that it possesses legal authority to apply for the award, and that if funds are awarded by the State Justice Institute pursuant to this application, it will comply with all applicable provisions of law and the regulations, policies, guidelines and requirements of the Institute as they relate to the acceptance and use of Institute funds pursuant to this application. The applicant further assures and certifies with respect to this application, that:

1. No person will, on the basis of race, sex, national origin, disability, color, or creed be excluded from participation in, denied the benefits of, or otherwise subjected to discrimination under any program or activity supported by Institute funds, and that the applicant will immediately take any measures necessary to effectuate this assurance.

2. In accordance with 42 U.S.C. 10706(a), funds awarded to the applicant by the Institute will not be used, directly or indirectly, to influence the issuance, amendment, or revocation of any Executive order or similar promulgation by Federal, State or local agencies, or to influence the passage or defeat of any legislation or constitutional amendment by any Federal, State or local legislative body.

3. In accordance with 42 U.S.C. 10706(a) and 10707(c):

   a. It will not contribute or make available Institute funds, project personnel, or equipment to any political party or association, to the campaign of any candidate for public or party office, or to influence the passage or defeat of any ballot measure, initiative, or referendum;

   b. No officer or employee of the applicant will intentionally identify the Institute or the applicant with any partisan or nonpartisan political activity or the campaign of any candidate for public or party office; and,

   c. No officer or employee of the applicant will engage in partisan political activity while engaged in work supported in whole or in part by the Institute.

4. In accordance with 42 U.S.C. 10706(b), no funds awarded by the Institute will be used to support or conduct training programs for the purpose of advocating particular nonjudicial public policies or encouraging nonjudicial political activities.

5. In accordance with 42 U.S.C. 10706(d), no funds awarded by the Institute will be used to supplant State or local funds supporting a program or activity; to construct court facilities or structures, except to remodel existing facilities or to demonstrate new architectural or technological techniques, or to provide temporary facilities for new personnel or for personnel involved in a demonstration or experimental program; or to solely purchase equipment for a court system.

6. It will provide for an annual fiscal audit of the project.

7. It will give the Institute, through any authorized representative, access to and the right to examine all records, books, papers, or documents related to the award.

8. In accordance with 42 U.S.C. 10708 (b) (as amended), research or statistical information that is furnished during the course of the project and that is identifiable to any specific individual, shall not be used or revealed for any purpose other than the purpose for which it was obtained. Such information and copies thereof shall be immune from legal process, and shall not be offered as evidence or used for any purpose in any action suit, or other judicial, legislative, or administrative proceeding without the consent of the person who furnished the information.

9. All research involving human subjects will be conducted with the informed consent of those subjects and in a manner that will ensure their privacy and freedom from risk or harm and the protection of persons who are not subjects of the research but would be affected by it, unless such procedures and safeguards would make the research impractical. In such instances, the Institute must approve procedures designed by the grantee to provide human subjects with relevant information about the research after their involvement and to minimize or eliminate risk or harm to those subjects due to their participation.

10. All products prepared as the result of the project will be originally-developed material unless otherwise specifically provided for in the award documents, and that material not originally developed that is included in such projects must by properly identified, whether the material is in a verbatim or extensive paraphrase format.

11. No funds will be obligated for publication or reproduction of a final product developed with Institute funds without the written approval of the Institute. The recipient will submit a final draft of each such product to the Institute for review and approval prior to submitting that product for publication or reproduction.

12. The following statement will be prominently displayed on all products prepared as a result of the project:
    This [document, film, videotape, etc.] was developed under a [grant, cooperative agreement, contract] from the State Justice Institute. Points of view expressed herein are those of the [author(s), filmmaker(s), etc.] and do not necessarily represent the official position or policies of the State Justice Institute.

13. THE "SJI" logo will appear on the front cover of a written product or in the opening frames of a video production produced with SJI funds, unless another placement is approved in writing by the Institute.

14. Except as otherwise provided in the terms and conditions of an Institute award, the recipient is free to copyright any books, publications, or other copyrightable materials developed in the course of an Institute-supported project, but the Institute shall reserve a royalty-free, non-exclusive and irrevocable right to reproduce, publish, or otherwise use, and to authorize others to use, the materials for purposes consistent with the State Justice Institute Act.

15. It will submit quarterly progress and financial reports within 30 days of the close of each calendar quarter during the funding period (that is, no later than January 30, April 30, July 30, and October 30); that progress reports will include a narrative description of project activities during the calendar quarter, the relationship between those activities and the task schedule and objectives set forth in the approved application or an approved adjustment thereto, any significant problem areas that have developed and how they will be resolved, and the activities scheduled during the next reporting period; and that financial reports will contain the information requested on the financial report form included in the award documents.

16. At the conclusion of the project, title to all expendable and nonexpendable personal property purchased with Institute funds shall vest in the court, organization or individual that purchased the property if certification is made to the Institute that the property will continue to be used for the authorized purposes of the Institute-funded project or other purposes consistent with the State Justice Institute Act, as approved by the Institute. If such certification is not made or the Institute disapproves such certification, title to all such property with an aggregate or individual value of $1,000 or more shall vest in the Institute, which will direct the disposition of the property.

17. The person signing the application is authorized to do so on behalf of the applicant and to obligate the applicant to comply with the assurances enumerated above.

DISCLOSURE OF LOBBYING ACTIVITIES

The State Justice Institute Act prohibits grantees from using funds awarded by the Institute to directly or indirectly influence the passage or defeat of any legislation by Federal, State of local legislative bodies. 42 U.S.C. 10706 (a). It also is the policy of the Institute to award funds only to support applications submitted by organizations that would carry out the objectives of their applications in an unbiased manner.

Consistent with this policy and the provisions of 42 U.S.C. 10706 (a), the Institute will not knowingly award a grant to an applicant that has, directly or through an entity that is part of the same organization as the applicant, advocated a position before Congress on the specific subject matter of the application. As a means of implementing that prohibition, SJI requires organizations submitting applications to the Institute to disclose whether they, or another entity that is part of the same organization as the applicant, have advocated a position before Congress on any issue, and to identify the specific subjects of their lobbying efforts. This form must be submitted with your application.

Name of Applicant: _____

Title of Application: _____

_____

☐ **Yes** ☐ **No** **Has the applicant (or an entity that is part of the same organization as the applicant) directly or indirectly advocated a position before Congress on any issue within the past five years?**

SPECIFIC SUBJECTS OF LOBBYING EFFORTS

If you answered **YES** above, please list the specific subjects on which your organization (or another entity that is part of your organization) has directly or indirectly advocated a position before Congress within the past five years. If necessary, you may continue on the back of this form or on an attached sheet.

Subject	Year

STATEMENT OF VERIFICATION

I declare under penalty of perjury that the information contained in this disclosure statement is correct and that I am authorized to make this verification on behalf of the applicant.

_____

Signature **Name (Typed)**

_____

Title **Date**

SJI Scholarship Application

This application does not serve as a registration for the course. Please contact the education provider.

APPLICANT INFORMATION:

1. Applicant Name: _____
(Last) (First) (M.I.)

2. Position: _____

3. Name of Court: _____

4. Address: _____
Street/P.O. Box
_____
City State Zip Code

5. Telephone No. _____

6. Email Address: _____

7. Congressional District: _____

PROGRAM INFORMATION:

☐ **On-site** ☐ **Online**

8. Course Name: _____

9. Course Dates: _____

10. Course Provider: _____

11. Location Offered: _____

ESTIMATED EXPENSES:

Please note: Scholarships are limited to tuition (excluding the conference fee), reasonable lodging up to $150 per night (including taxes), and transportation expenses to and from the site of the course, up to a maximum of $1,500.

Tuition: $ _____

Transportation: $ _____
(Airfare, train fare, or, if you plan to drive, an amount equal to the approximate distance and mileage rate.)

Lodging: $ _____

Total Amount Requested: $ _____

Are you seeking/have you received a scholarship for this course from another source? ☐ Yes ☐ No

If yes, please specify the source(s) and amount(s), and status (received or pending) _____

_____

Are State or local funds available to support your attendance at the proposed course? ☐ Yes ☐ No

If yes, what amount(s) will be provided? _____

SJI Scholarship Application Page 2

ADDITIONAL INFORMATION:

Please attach a current resume or professional summary, and provide the information requested below.
(You may attach additional pages if necessary.)

1. Please describe your need to acquire the skills and knowledge taught in this course.

2. Please describe how taking this course will benefit you, your court, and the State's courts generally.

3. Is there an educational program currently available through your State on this topic?

4. How long have you served as a judge or court manager?

5. How long do you anticipate serving as a judge or court manager, assuming reelection or reappointment?

6. What continuing professional education programs have you attended in the past year? Please indicate which were mandatory and which were non-mandatory.

STATEMENT OF APPLICANT'S COMMITMENT

If a scholarship is awarded, I will share the skills and knowledge I have gained with my court colleagues locally and, if possible, state-wide, and I will submit an evaluation of the educational program to the State Justice Institute and to the Chief Justice of my State.

_____ _____

Signature **Date**

Please return this form and Form S-2 to:
Scholarship Coordinator, State Justice Institute, 1650 King Street, Suite 600, Alexandria, VA 22314

SJI Scholarship Application

Concurrence

I, _____,

Name of Chief Justice (or Chief Justice's Designee)

have reviewed the application for a scholarship to attend the program entitled: _____

_____,

prepared by _____,
and concur in its submission to the State Justice Institute. The applicant's participation in the program would benefit the State. The applicant's absence to attend the program would not present an undue hardship to the court.

Check box that applies:

❑ 1. Public funds **are not** available to enable the applicant to attend this course, and receipt of a scholarship would not diminish the amount of funds made available by the State for judicial branch education.

❑ 2. Public funds **are** available to support the applicant, but are insufficient to cover total costs. Therefore funding from the Institute is requested.

_____
Signature

_____
Name

_____
Title

_____
Date

[FR Doc. 07–4945 Filed 10–5–07; 8:45 am]
BILLING CODE 6820–SC–C

Federal Register

Tuesday,
October 9, 2007

Part III

Nuclear Regulatory Commission

10 CFR Parts 2, 50, 51, 52, and 100
Limited Work Authorizations for Nuclear Power Plants; Final Rule

NUCLEAR REGULATORY COMMISSION

10 CFR Parts 2, 50, 51, 52, and 100

RIN 3150–AI05

Limited Work Authorizations for Nuclear Power Plants

AGENCY: Nuclear Regulatory Commission.

ACTION: Final rule.

SUMMARY: The Nuclear Regulatory Commission (NRC) is amending its regulations applicable to limited work authorizations (LWAs), which allow certain construction activities on production and utilization facilities to commence before a construction permit or combined license is issued. This final rule modifies the scope of activities that are considered construction for which a construction permit, combined license, or LWA is necessary, specifies the scope of construction activities that may be performed under an LWA, and changes the review and approval process for LWA requests. The NRC is adopting these changes to enhance the efficiency of its licensing and approval process for production and utilization facilities, including new nuclear power reactors.

DATES: The effective date is November 8, 2007.

FOR FURTHER INFORMATION CONTACT: Nanette V. Gilles, Office of New Reactors, U.S. Nuclear Regulatory Commission, Washington, DC 20555–0001; telephone 301–415–1180; e-mail: *NVG@nrc.gov* or Geary Mizuno, Office of the General Counsel, U.S. Nuclear Regulatory Commission, Washington, DC 20555–0001; telephone 301–415–1639; e-mail: *GSM@nrc.gov*.

SUPPLEMENTARY INFORMATION:

I. Background
A. Development of the Supplemental Proposed LWA Rule
1. 10 CFR Part 52 Rulemaking
2. Industry Stakeholder Comments Seeking Changes to LWA Process
B. Publication of Supplemental Proposed LWA Rule and External Stakeholder Interactions During the Public Comment Period
C. Description of Supplemental Proposed LWA Rule
II. Public Comments
A. Overview of Public Comments
B. NRC Response to Public Comments
1. Commission Questions
2. LWA Process
3. SSCs Within Scope of ''Construction''
4. Excavation
5. Compliance With NEPA
6. LWA Application Process
7. Other Topics
III. Discussion
A. History of the NRC's Concept of Construction and the LWA
B. NRC's Concept of Construction and the AEA
C. NRC's LWA Rule Complies With NEPA
1. NRC's Concept of Construction Is Consistent With the Legal Effect of NEPA
2. NRC's Concept of the ''Major Federal Action'' Is Consistent With NEPA Law
3. NRC's Phased Approval Approach Is Not Illegal Segmentation Under NEPA
D. Consideration of Activities as ''Construction.''
1. Driving of Piles
2. Excavation
3. Temporary Structures and Activities in the Excavation
4. Construction SSCs
E. Phased Application and Approval Process
F. EIS Prepared, but Facility Construction Was Not Completed
G. Commission Action on PRM–50–82
IV. Section-by-Section Analysis
V. Availability of Documents
VI. Agreement State Compatibility
VII. Voluntary Consensus Standards
VIII. Environmental Impact—Categorical Exclusion
IX. Paperwork Reduction Act Statement
X. Regulatory Analysis
XI. Regulatory Flexibility Act Certification
XII. Backfit Analysis
XIII. Congressional Review Act

I. Background

A. Development of the Supplemental Proposed LWA Rule

1. 10 CFR Part 52 Rulemaking

This LWA rulemaking originated as a supplement to an NRC rulemaking effort to revise 10 CFR part 52. The NRC issued 10 CFR part 52 on April 18, 1989 (54 FR 15372), to reform its licensing process for future nuclear power plants. 10 CFR part 52 added alternative licensing processes in 10 CFR part 52 for early site permits (ESPs), standard design certifications, and combined licenses. These were additions to the two-step licensing process that already existed in 10 CFR part 50. The processes in 10 CFR part 52 allow for resolving safety and environmental issues early in the licensing proceedings and were intended to enhance the safety and reliability of nuclear power plants through standardization.

The NRC had planned to update 10 CFR part 52 after using the standard design certification process. The proposed rulemaking action began with the issuance of SECY–98–282, ''Part 52 Rulemaking Plan,'' on December 4, 1998. The Commission issued a staff requirements memorandum (SRM) on January 14, 1999 (SRM on SECY–98–282), approving the NRC staff's plan for revising 10 CFR part 52. Subsequently, the NRC obtained considerable stakeholder comments on its planned action, conducted three public meetings on the proposed rulemaking, and twice posted draft rule language on the NRC's rulemaking Web site before issuance of the initial proposed rule on July 3, 2003 (68 FR 40026). However, a number of factors, including the experience gained in using the 10 CFR part 52 early site permit process, led the NRC to question whether the July 2003 proposed rule would meet the NRC's objective of improving the effectiveness of its processes for licensing future nuclear power plants (March 13, 2006; 71 FR 12782). As a result, the NRC decided that a substantial rewrite and expansion of the original proposed rulemaking was desirable so that the agency may more effectively and efficiently implement the licensing and approval processes for future nuclear power plants under part 52. Accordingly, the Commission decided to revise the July 2003 proposed rule and published the revised proposed rule for public comment on March 13, 2006 (71 FR 12782). The public comment period on the March 2006 proposed rule ended on May 30, 2006.

2. Industry Stakeholder Comments Seeking Changes to LWA Process

In a May 25, 2006 comment letter,[1] the Nuclear Energy Institute (NEI) suggested modifications to the NRC's LWA process including: (1) That non-safety-related ''LWA–1'' activities, currently reflected in §§ 50.10(c) and 50.10(e)(1), be allowed to proceed without prior authorization from the NRC, and (2) that the approval process for safety-related ''LWA–2'' activities be accelerated. NEI's comment also stated that the current definition of construction in § 50.10(b) reflects the correct interpretation of the Commission's licensing authority under the Atomic Energy Act of 1954, as amended.

NEI supported its suggested changes to the LWA process, stating that the business environment requires that new plant applicants seek to minimize the time interval between a decision to proceed with a combined license application and the start of commercial operation. To achieve this goal, NEI stated that non-safety-related ''LWA–1'' activities would need to be initiated up to 2 years before the activities currently defined as ''construction'' in § 50.10(b). NEI believes that the current LWA

[1] *See* Letter from Adrian P. Heymer, Nuclear Energy Institute, to Annette L. Vietti-Cook, Secretary, U.S. Nuclear Regulatory Commission, *Pre-Licensing Construction Activity and Limited Work Authorization Issues relating to NRC Proposed Rule, ''Licenses, Certifications and Approvals for Nuclear Power Plants,'' 71 FR 12782 (March 13, 2006) (RIN 3150–AG24)* (May 25, 2006) (ADAMS ML061510471).

approval process would constrain the industry's ability to use modern construction practices and needlessly add 18 months to estimated construction schedules for new plants that did not reference an early site permit with LWA authority. NEI's comment letter stated that ''[t]o the extent the NRC determines that these LWA issues cannot be addressed in the current rulemaking, we ask that the Commission initiate an expedited rulemaking.''

The NRC determined that the changes suggested in the NEI letter could not be incorporated into the final part 52 rule without re-noticing, but that the NEI letter met the sufficiency requirements for a petition for rulemaking as described in 10 CFR 2.802(c). Therefore, the NRC elected to treat the letter as a petition for rulemaking (PRM–50–82).

B. Publication of Supplemental Proposed LWA Rule and External Stakeholder Interactions During the Public Comment Period

The supplemental proposed LWA rule was published in the **Federal Register** on October 17, 2006 (71 FR 61330) for a 30-day public comment period which ended November 16, 2006. During the public comment period, the NRC held a public meeting on November 1, 2006, to answer external stakeholder questions about the supplemental proposed LWA rule. A transcript of the public meeting was made (Agencywide Documents Access and Management System (ADAMS) Accession No. ML063190396), as referenced in the meeting summary (ADAMS Accession No. ML062970517).

In addition, the NRC informally contacted several Federal agencies that traditionally have been interested in environmental impacts statements (EISs) prepared by the NRC before the issuance of LWAs and construction permits, for the purpose of seeking their comments on the supplemental proposed LWA rule. These Federal agencies were the Council on Environmental Quality (CEQ), the U.S. Environmental Protection Agency (EPA), the Federal Energy Regulatory Commission (FERC), and the U.S. Department of the Interior, Fish, and Wildlife Service (FWS).

Finally, the Commission held a public meeting on November 9, 2006, on the overall part 52 rulemaking, at which time industry stakeholders presented additional information on the supplemental proposed LWA rule.

C. Description of Supplemental Proposed LWA Rule

The supplemental proposed LWA rule would narrow the scope of activities requiring permission from the NRC in the form of an LWA by eliminating the concept of ''commencement of construction'' currently described in § 50.10(c) and the authorization described in § 50.10(e)(1). Instead, under the supplemental proposed rule, NRC authorization would be required only before undertaking activities that have a reasonable nexus to radiological health and safety and/or common defense and security (*i.e.*, excavation, subsurface preparation, installation of the foundation, and on-site, in-place fabrication, erection, integration or testing, for any structure, system, or component of a facility required by the Commission's rules and regulations to be described in the site safety analysis report or preliminary or final safety analysis report). While the proposed redefinition of ''construction'' would result in fewer activities requiring NRC permission in the form of an LWA, it also would redefine certain activities (such as the driving of piles) that are currently excluded from the regulatory definition of construction given in § 50.10(b), as construction requiring an LWA.

Further, the supplemental proposed LWA rule provided an optional, phased application and approval procedure for construction permit and combined license applicants to obtain LWAs. The supplemental proposed rule provided for an environmental review and approval process for LWA requests that would allow the NRC to grant an applicant permission to engage in LWA activities after completion of an EIS addressing those activities, but before completion of the comprehensive EIS addressing the underlying request for a construction permit or combined license. The supplemental proposed rule also delineated the environmental review required in situations where the LWA activities are to be conducted at sites for which the Commission has previously prepared an EIS for the construction and operation of a nuclear power plant, and for which a construction permit was issued, but construction of the plant was never completed.

II. Public Comments

A. Overview of Public Comments

The NRC received 13 public comments [2] on the supplemental proposed rule. Ten comments were from external industry stakeholders, consisting of NEI and 7 nuclear power plant licensees—including the 3 applicants for ESPs whose applications are currently pending before the NRC, and 2 companies who have applied (or are expected to apply) for standard design certifications (GE Nuclear and Areva NP). One commenter, Dianne Curran, submitted a comment on behalf of Public Citizen, a consumer advocacy organization, and the Nuclear Information and Resource Service (NIRS), an information and networking organization for organizations concerned about nuclear issues and energy sustainability. One comment was received from the EPA, and one comment was received from an NRC staff individual.

NEI supported the general approach and objective of the supplemental proposed rule, but raised three key issues on the supplemental proposed rule: (1) Inclusion of excavation in the definition of ''construction;'' (2) Designation of structures, systems, and components (SSCs) ''required to be described'' in the standard safety analysis report or final safety analysis report (FSAR) as a key element of the definition of ''construction;'' and (3) Limiting submittal of LWA applications up to 12 months in advance of a combined license application. NEI also proposed a number of changes to the supplemental proposed rule to address three less-significant areas of concern: (1) An LWA applicant's reliance on an earlier EIS for an unconstructed facility; (2) LWA applicant's ability to take advantage of the provisions of § 2.101(a)(9) for an accelerated hearing schedule when submitting an LWA application in advance of a combined license application; and (3) The need for ''grandfathering'' of current ESP applicants. Finally, NEI suggested that § 2.101(a)(5) be modified from the March 2006 proposed rule to allow one part of a combined license application to precede or follow the other part of the application by no more than 12 months. The other industry commenters, including GE Nuclear and Areva NP, generally supported the NEI comments, and in some cases provided additional discussion in support of one or more of NEI's specific comments.

Public Citizen and NIRS opposed granting of an LWA in advance of issuance of a construction permit or combined license, in general because

[2] A public comment dated November 7, 2006, from Westinghouse Electric Company LLC, on the main part 52 rulemaking, was erroneously designated as comment no. 1 on the supplemental proposed LWA rule. This number was later assigned to a comment filed by Diane Curran on behalf of Public Citizen and the NIRS.

these commenters perceived the process as introducing additional complexity to the licensing process, and increasing the cost to individuals who wish to participate in the licensing process. These organizations supported the NRC's proposal to include excavation and the driving of piles in the definition of construction.

The EPA indicated that it had no objections to the supplemental proposed LWA rule, stating that the supplemental rule would ''enhance the efficiency of the NRC's LWA approval process, while maintaining appropriate consideration of environmental effects pursuant to NEPA [National Environmental Policy Act of 1969, as amended].'' In addition, NRC was advised by telephone that CEQ had no objection to the supplemental proposed LWA rule, and therefore would not submit a written comment on the rule.

The NRC staff individual provided eight numbered comments on the supplemental proposed LWA rule. The commenter focused on compliance with the NEPA and the potential adverse effect of the supplemental proposed rule on the NRC staff's resources.

B. NRC Response to Public Comments

The NRC has carefully considered the stakeholder comments, and is adopting a final LWA rule which differs in some respects from the supplemental proposed LWA rule. The final rule is described and discussed in more detail in Sections *III. Discussion,* and *IV. Section-by-Section Analysis* of this document.

The NRC is adopting the LWA rule as a separate final rule, rather than incorporating its provisions into the final part 52 rule. Incorporating the provisions of the final LWA rule into the final part 52 rulemaking would have resulted in a delay in publication of the final part 52 rule, because of the additional time needed for NRC consideration and resolution of the substantial issues raised in the public comments on the supplemental proposed LWA rule. Accordingly, the NRC has adopted the final part 52 rulemaking in a separate action, in advance of this final LWA rule.

1. Commission Questions

In the statement of considerations (SOC) for the supplementary proposed LWA rule, the Commission posed three questions, as follows (October 17, 2006; 71 FR 61340, second column):

> As explained above, this supplemental proposed rule would impact the types of activities that could be undertaken without prior approval from the NRC, with NRC approval in the form of an LWA, and with NRC approval in the form of a construction permit or combined license. Therefore, in addition to the general invitation to submit comments on the proposed rule, the NRC also requests comments on the following questions:
>
> 1. What types of activities should be permitted without prior NRC approval?
> 2. What types of activities should be permitted under an LWA?
> 3. What types of activities should only be permitted after issuance of a construction permit or combined license?

Only one commenter provided separate responses to these three Commission questions; but the responses were simply an abbreviated version of the comments. The remaining commenters addressed the issues raised in these questions in the course of the commenters' discussion on the supplementary proposed LWA rule. Accordingly, the NRC is not providing a separate discussion of these questions and commenters' responses. Instead, the NRC is responding to these issues in the NRC's responses to specific comments.

2. LWA Process

Comment: The Commission should adopt the LWA final rule as a necessary improvement to the existing LWA process. (NEI, Dominion Nuclear North Anna, Duke Energy, Florida Power and Light, Progress Energy, Southern Company, Unistar, Areva, and GE Nuclear)

NRC Response: The NRC agrees with the commenters that the former NRC provisions on LWAs should be amended to improve the LWA process.

Comment: The Commission should not adopt regulations that allow approval of LWA activities in advance of the issuance of a construction permit or combined license. Allowing LWA activities before a plant is licensed would confirm to the public that the licensing process is a sham. The LWA process represents a further segmentation of the licensing process, which will add complexity to the licensing process, and result in further disenfranchisement of the public. (Public Citizen/NIRS 1)

NRC Response: The NRC disagrees with these commenters. The commenters' position fails to recognize that the LWA process has been used by the agency for over 30 years, and therefore the proposed changes to the LWA process would not add to complexity, or otherwise represent further segmentation. The agency's rules include several longstanding requirements directed at avoiding NEPA segmentation. These requirements are retained in their essential form in the final LWA rulemaking.

The NRC does not believe that the final LWA rule adds any further complexity to the licensing process, or otherwise results in further ''disenfranchisement'' of the public. As stated above, the NRC's regulatory regime already includes the LWA process, and the rule does not modify or change the public's ability to participate in the licensing process. Indeed, rather than ''disenfranchising'' the public, the LWA rule may have the effect of enhancing the ability of external stakeholders to participate in a hearing to resolve their issues with respect to a particular nuclear power plant. Because of resource limitations, many public stakeholders have expressed their concern that, because of the broad range of issues addressed by the NRC at each stage of licensing, it is difficult for them to seek resolution in an NRC hearing for the full range of issues that they are interested in. For these stakeholders, the LWA process—by separating out a defined set of issues to be resolved in advance of the underlying combined license or construction permit proceeding—allows public stakeholders to focus their resources on the relevant issues in an LWA hearing. The ''complexity'' of the process provides an orderly sequencing of the overall set of issues that must be resolved, without introducing unlawful segmentation. The NRC believes that if these public stakeholders consider the revised process in this light, they should conclude that the LWA process enhances, rather than detracts from, participation in the licensing process by interested members of the public who are resource-limited.

The NRC does not believe that the NRC's proposed redefinition of ''construction'' constitutes unlawful ''segmentation'' which results in non-compliance with NEPA. Segmentation, as discussed elsewhere in this SOC, embraces the situation where a Federal agency divides what would otherwise be regarded as a single, integrated Federal action into separate, smaller Federal actions, for the purpose of avoiding compliance with NEPA, or otherwise minimizing the apparent impact of the single, integrated Federal action. The NRC's redefinition of construction is not motivated by a desire to avoid compliance with NEPA, nor will it result in a single Federal action being divided into smaller, sequential Federal actions. Rather, the NRC's redefinition reflects its reconsideration of the proper regulatory jurisdiction of the agency, and properly divides what was considered a single Federal action into private action for

which the NRC has no statutory basis for regulation, and the Federal action (licensing of construction activities with a reasonable nexus to radiological health and safety or common defense and security, for which no other regulatory approach is acceptable) which will require compliance with NEPA.

3. SSCs Within Scope of ''Construction''

Comment: The scope of SSCs that must be described in the FSAR is not always clear, even under the words of existing NRC regulations (*e.g.*, 10 CFR 50.34(b)(2)(i)), which requires discussion of certain systems ''insofar as they are pertinent.'' (Areva 1, 2)

NRC Response: The NRC agrees, in part, with these comments and has revised the scope of SSCs that fall within the definition of construction to clearly identify the SSCs that have a reasonable nexus to radiological health and safety, or the common defense and security.

Comment: The NRC's description of activities constituting ''construction,'' which require a combined license or construction permit (October 17, 2006; 71 FR 61337), should be modified to refer to the ''installation or integration of that structure, system, or component into its final plant location and elevation * * *.'' (Progress Energy 4)

NRC Response: The NRC agrees in part with the commenter, and the corresponding language of this SOC has been modified to state ''into its final plant location would require * * *.''

4. Excavation

Comment: It is not necessary to define construction as including excavation of portions of the nuclear power plant facility having a ''reasonable nexus to radiological health and safety.'' Problems identified during excavation should be identified as part of the site characterization and investigation required for preparing a combined license or construction permit. NRC Regulatory Guide (RG) 1.165, ''Identification and Characterization of Seismic Sources and Determination of Safe-Shutdown Earthquake Ground Motion,'' was updated in 1997 to provide that combined license (COL) applicants' FSARs should include a commitment to geologically map all excavations and notify the NRC when excavations are open for inspection. For safety-related SSCs, these excavations and characterization/investigation activities would be conducted under the applicant's quality assurance (QA) program. This could result in relocation of such SSCs. This provides a better process for ensuring safety and would better support an effective licensing process. In addition, NRC will be involved in pre-application activities and may elect to conduct oversight of any activity involving site characterization and site preparation. The examples cited by the NRC in the public meeting as a basis for including excavation within the definition of ''construction'' did not involve questions about the safety of the excavation activities themselves, but rather the conditions that were identified as the result of excavation. In these cases, the commitments to geologic mapping and notification of the NRC are sufficient to meet the NRC's regulatory interests. Accordingly, §§ 50.10(b) and 51.4 should be revised in the final rule to exclude excavation from the definition of construction, provided that the entity conducting excavation geologically maps the excavations and the NRC staff is notified when the excavations are opened for inspection. (NEI 1; GE Nuclear; Progress Energy 1)

NRC Response: The NRC agrees, in part, with this comment and has deleted excavation from the definition of construction in 10 CFR 50.10(a). A construction permit or combined license applicant is responsible, under the current regulations, to demonstrate that the site conditions are acceptable for the proposed facility design. This responsibility exists regardless of whether or not the NRC reviews and approves the proposed excavation activities and inspects the excavation activities as they are accomplished. Inasmuch as NRC inspection and regulatory oversight of the excavation are not necessary for reasonable assurance of adequate protection to public health and safety or common defense and security, and because the applicant bears the burden for accurately characterizing the parent material, the NRC concludes that excavation may be excluded from the definition of construction.

Comment: Excavation and the driving of piles should be considered ''construction.'' Prior agency experience has shown that safety issues have been identified during excavation, citing to the experience of North Anna nuclear power plant, as well as a nuclear power plant in the Midwest where soil conditions identified during excavation necessitated a change in foundation design. Neither the public nor a reviewing court would think that the NRC would be able to make the underlying licensing decision (*i.e.*, granting a construction permit or a combined license) in an unbiased fashion if excavation proceeded in advance of the underlying licensing decision. (Public Citizen/NIRS 2)

NRC Response: The NRC disagrees, in part, with this comment. As discussed in the response immediately above, the NRC concludes that excavation may be excluded from the definition of construction. However, the driving of piles and any other foundation work is defined as construction.

Comment: The SOC for the final rule should specify that excavation includes appropriate erosion control measures necessary to stabilize site excavations pending LWA or license (*i.e.*, combined license or construction permit) approval of construction activities. (NEI 1.5)

NRC Response: The NRC agrees, in part, with this comment. The NRC's definition of construction in the final LWA rule includes: (1) Any change made to the parent material in which the excavation occurs (*e.g.*, soil compaction, rock grouting); and (2) The placement of permanent SSCs that are put into the excavation during or after the excavation (*e.g.*, installation of permanent drainage systems, or placement of mudmats). If the erosion control measures are conducted outside of the excavated hole and do not cover up the exposed soil conditions, then those activities would be allowed under § 50.10(a). However, under the final LWA rule, the placement of temporary SSCs in the excavation, such as retaining walls, drainage systems, and erosion control barriers, all of which are to be removed before fuel load, would not be considered construction.

Comment: ''Construction'' should be limited to above-ground installation of certain SSCs. (Areva 1)

NRC Response: The NRC disagrees. Even under the former provisions of § 50.10(e)(3), construction included the setting of foundations and other work accomplished below grade. The commenter provided no basis for limiting the definition of construction to the above-grade installation of SSCs of interest. No change was made in the final rule as the result of this comment.

Comment: Temporary buildings, structures, and roads, may be located in the eventual location of SSCs for which an LWA is required for excavation under the supplemental proposed LWA rule. If excavation is required for the temporary buildings, structures, and roads, the supplemental proposed rule would appear to prohibit such excavation. The final rule should make clear that excavation for SSCs outside the scope of an LWA, such as temporary buildings, structures, and roads, should be excluded from the definition of construction. (Areva 3)

NRC Response: As discussed previously, the NRC has decided to exclude all excavation from the definition of construction. In addition, the NRC notes that under the final LWA rule, SSCs that are not within the scope of construction may be installed before receipt of an LWA, construction permit, or combined license. Accordingly, the final rule resolves the commenter's issue.

5. Compliance With NEPA

Comment: The impacts of the construction activities that the NRC proposes to exclude from its regulations have been part of the NRC regulations since 1972. What has changed causing the NRC to decided that these activities will not longer be part of the environmental review? Has NRC been doing it wrong for more than 30 years (including the 3 early site permits that are either completed or near completion)? (Kugler 1)

NRC Response: As discussed in the ''Discussion'' section of this final rule (as well as the supplemental proposed rule), the 1972 amendment to the definition of construction in 10 CFR 50.10 was made early in the Federal government's implementation of then-new NEPA. Since that time, the Federal case law on NEPA has evolved, with several U.S. Supreme Court decisions on the requirements of NEPA. In addition, in preparing for the expected next generation of nuclear power plant construction applications, the nuclear power industry has reviewed the overall construction process based upon lessons learned from the construction and licensing process used for currently operating reactors. The industry submitted what is essentially a petition for rulemaking seeking changes to the LWA process, reflecting those lessons learned and their understanding of the current state of NEPA law. The NRC has reviewed the applicable law, and for the reasons stated elsewhere in this SOC, agrees with the petitioner that the current definition of construction and the current LWA requirements in § 50.10 are not compelled by NEPA or the Atomic Energy Act (AEA) of 1954, as amended. While the agency's regulations on construction and LWAs were a reasonable implementation of NEPA as understood in 1972, the NRC believes that, with more than 30 years experience in implementing NEPA and the evolving jurisprudence, the time is appropriate for reconsideration and revamping of these NRC requirements.

Comment: The impacts of the construction of a nuclear power plant that NRC now proposes to exclude from NRC regulations are probably 90 percent of the true environmental impacts of construction. Before even talking to the NRC, a power company can clear and grade the land, build roads and railroad spurs, erect permanent and temporary buildings, build numerous plant structures (*e.g.*, cooling water intake and discharge, cooling towers), and build switchyards and transmission lines. After potentially doing all of that, THEN the company would come to the NRC and ask permission to build the power plant *for which all of this work was* done. How does this comply with NEPA? The commenter asserts that the NRC is going to ignore almost all of the construction impacts of the proposed action. (Kugler 2)

NRC Response: The commenter assumes that, if a private action is preparatory to Federal action, then NEPA provides a statutory basis for the agency to extend its otherwise limited jurisdiction under the AEA to those private, preparatory actions, solely for the purpose of agency consideration of the environmental impacts under NEPA. The commenter has not pointed to, and the NRC has not identified, Federal case law that supports such a position. Indeed, even in a case where the Federal agency had unequivocal statutory authority to grant or deny a Federal permit, the U.S. Supreme Court specifically held that the Federal agency was not compelled to require mitigation based upon environmental considerations identified in the NEPA review. *Robertson* v. *Methow Valley Citizens Council,* 490 U.S. 332 (1989).

The commenter also asserts that the NRC is going to ''ignore all the [pre-]construction impacts of the proposed action.'' On the contrary, as stated elsewhere in this SOC, the pre-construction private actions of clearing, grading, access road construction, etc., will be considered in the cumulative impacts analysis in the LWA EIS as the baseline for analyzing the environmental impacts associated with the Federal action authorizing LWA activities. This information will be used when evaluating the environmental impacts of construction and operation of the proposed nuclear power plant.

Comment: The commenter states that the final rule says NRC won't consider the sunk costs of all of this work in your decision whether to approve the request to build the plant. The commenter asserts that NRC has allowed the company to do most of the environmental damage. Who cleans up the mess if the NRC says no? The commenter states that because the NRC has excluded from its review all of this work that's specifically for the purpose of building the plant, the NRC also can't require any redress plan for the site for those impacts. (Kugler 2.a)

NRC Response: The commenter appears to believe that the NRC has authority to exercise its regulatory jurisdiction in an area where it does not otherwise possess regulatory authority under its organic statute, solely for the purpose of ensuring environmental redress of private activities with significant environmental impacts. The NRC does not agree with the commenter's implicit suggestion. As discussed in the response to the previous comment as well as elsewhere in this SOC, the NRC does not possess statutory authority to regulate activities that do not have an impact upon radiological health and safety or common defense and security, and NEPA does not provide independent statutory authority to extend the agency's jurisdiction solely for the purpose of assuring that adverse environmental impacts are considered and mitigated. While this may be a worthy goal, the NRC may not lawfully act in such a manner, absent additional statutory authority which is not currently provided by either NEPA or the AEA.

Comment: The commenter asserts that NRC won't consider the sunk costs in its review. The commenter also asserts that it sounds like the ''baseline'' for the environmental review will include the environmental damage done by a company in terms of ''pre-application'' activities. In other words, if an applicant for an LWA, CP, or COL has done all of the things NRC now allows without NRC review, the condition of the cleared and partially built site is now the starting point for the environmental review. The commenter states that in terms of comparing this partially built site to any alternative site, NRC has essentially ''pre-selected'' the site chosen by the applicant. The commenter states there will be less environmental impacts at a site that has already had most of the damage done to it as compared to any other site. The commenter believes the NRC has handed its responsibility for the site suitability determination over to the applicant. (Kugler 2.b)

NRC Response: The commenter makes two incorrect assumptions. First, the commenter implicitly assumes that environmental matters are the key determinants of site suitability. The NRC believes that, as a practical matter and as borne out by the history of site suitability determinations in the past, other factors, such as seismic activity and intensity, geological structures, meteorological factors, impediments to development of emergency plans,

security issues, and demographics (population density and distance) from a safety perspective are at least as important, if not more important, than ''environmental'' matters as a key determinant of site suitability.

Second, the commenter assumes that clearing of a site will always tilt the environmental balance in favor of the applicant's ''pre-selected site.'' This may not be true in most cases. For example, even an ''obviously superior'' site from the standpoint of environmental impacts on water—which is likely to be the determining ''environmental'' impact—will require grading and clearing in order to be used. If construction were to be abandoned at the applicant's ''pre-selected site'' and commenced at the ''obviously superior site,'' the environmental impacts of pre-construction activities such as clearing and grading would still have to be performed at the ''obviously superior'' site. In essence, the ''sunk environmental impacts'' associated with preconstruction at the pre-selected site are balanced out by the ''future'' environmental impacts associated with preconstruction at the ''obviously superior'' site. Thus, pre-construction at a ''pre-selected'' site could not, in and of itself, lead to automatic dismissal of otherwise ''obviously superior'' sites.

In any event, the issue of the ''baseline'' for purposes of alternative sites is not addressed directly in the final LWA rule and will be resolved in the development of NRC guidance on implementation of the final LWA rule. Furthermore, the NRC notes that pre-construction impacts will be evaluated as part of the cumulative impacts analysis, which may render moot some aspects of the commenter's concerns in this area.

Comment: How can NRC tell the world in an EIS that the only real impacts of construction of a nuclear power plant will be related to digging a big hole and a few other straggling items that will occur while the structures described in the FSAR are being built? (Kugler 2.c)

NRC Response: The commenter appears to assert that the NRC's EIS for a combined license must attribute to the NRC's Federal action all of the environmental impacts of constructing a nuclear power facility, including the private, pre-construction activities that may be accomplished by the applicant without any NRC approval. The commenter's implicit assertion is incorrect. The NRC's EIS need only describe the environmental impacts of the Federal action as those construction activities, as defined under § 50.10, which can only be accomplished under an LWA and combined license or construction permit.

The environmental impacts of pre-construction activities will also be described in the NRC's EIS because such description is necessary to evaluate the cumulative impacts of the Federal action, in light of the pre-existing impacts of the private, pre-construction action. The cumulative impacts discussion should provide information on the total environmental impacts of constructing the nuclear power plant to both the NRC decisionmaker and the general public.

The NRC notes that, under the final LWA rule, excavation for SSCs that are important from a radiological health and safety or common defense and security standpoint will not be treated as ''construction.'' Therefore, the environmental effects of excavation would not be evaluated as an impact attributable to the Federal licensing action, but instead be added to the environmental baseline for a site.

Comment: How are applicants and NRC going to divide impacts if some of the construction activities now out side (sic.) the NRC's scope are going on at the same time as activities inside NRC's scope? For example, traffic impacts of the construction workforce are often an issue. But how does the NRC deal with it if part of the workforce is building cooling towers and intake systems, and part is building FSAR-listed structures? Another case is property taxes. The property taxes paid by the company are a significant item in the socioeconomic review. Are the applicant and the NRC now going to have to differentiate between taxes paid for FSAR-related facilities and taxes paid for other facilities? (Kugler 2.d)

NRC Response: The commenter raises a number of detailed issues with respect to NRC implementation of the final rule in the course of preparing EISs. None of these matters appear to raise issues that are insurmountable or would be unusually difficult to resolve. For example, the need to apportion the taxes for FSAR-related SSCs, versus taxes on other portions of the facility whose construction does not require NRC approval could be resolved by simply treating all the taxes paid as a benefit of operation, and the impacts from all portions of the plant as an impact of operation. The NRC expects that the staff will develop supplemental guidance to the environmental standard review plan on these and other implementation matters.

Comment: The commenter states that the rule says that if an LWA is issued, the EIS to build and operate a nuclear power plant will be a supplement to the EIS for the LWA. The commenter believes this means that the EIS that evaluates the impacts of building and operating a large commercial power plant will be a supplement to the EIS for digging a big hole. The commenter states that assuming the EIS for the big hole ignores all of the other impacts of construction that may already have taken place, it's going to be pretty limited in scope. The commenter states that this EIS of very limited scope will now become the base document, and the EIS that considers ALL of the impacts of operations will be a supplement to it. (Kugler 3)

NRC Response: The NRC believes that the proposed rule is consistent with NEPA. The commenter presented no rationale why the NRC's proposal violates either NEPA or CEQ's implementing regulations. NEPA itself only requires that a statement be prepared addressing the environmental impacts and alternatives of major Federal actions significantly affecting the environment. The statute does not contain any language specifically constraining the manner in which each EIS for two sequential Federal actions must be prepared. Hence, the NRC is free to select a manner of NEPA compliance which best meets the agency's needs.

The commenter appears to be concerned that, if the LWA applicant chooses to submit an environmental report limited to LWA activities, then the LWA EIS would be a relatively narrow document which cannot be the basis for a supplemental EIS with a greatly expanded scope of subject matters addressed. The NRC does not believe that the commenter's concern is well-founded. First, the CEQ's regulations specifically permit ''tiering'' of EISs to ''eliminate repetitive discussions of the same issues and to focus on the actual issue ripe for consideration at each level of the environmental review * * *'' (40 CFR 1502.20). Although most of the tiering discussion refers to a broad initial EIS followed by more specific EIS tiering on the earlier EIS, 40 CFR 1502.20 also states, ''Tiering may also be appropriate for *different stages of actions* (emphasis added).'' The NRC believes that the LWA is a stage in the overall Federal action of issuing a license for construction (and, in the case of a combined license under part 52, operation) of a nuclear power plant. It is logical to evaluate the environmental impacts of the activities that occur first (*i.e.*, LWA activities), followed by evaluation of the impacts of activities that occur thereafter (*i.e.*, main construction and operation). The

potential for segmentation of the Federal impacts is minimized, as discussed previously, by various provisions of the rule which, *inter alia,* prohibit NRC consideration of sunk costs, require consideration of all environmental impacts and benefits attributable to LWA activities in the supplemental EIS prepared for the underlying combined license or construction permit application, and require the applicant/licensee to develop and, if necessary, implement a redress plan. Second, the CEQ regulations also encourage agencies to incorporate by reference material into an EIS to cut down on bulk without impeding agency and public review of the action. Nothing in the CEQ regulations suggests that incorporation by reference is precluded where the material being incorporated is smaller in bulk than the EIS into which the material is being incorporated. The NRC believes the purpose of incorporation by reference is served by incorporating the LWA EIS into the supplemental EIS prepared at the combined license or construction permit stage.

Comment: The commenter states the LWA EIS will only be looking at the impacts of digging the big hole and pouring the foundation. At what point does the NRC staff evaluate the impacts of construction and operation to determine whether the site is SUITABLE for the construction and operation of a nuclear power plant? Is that done later? Does that mean that NRC could authorize digging the hole at a site that could later be determined by NRC to be unsuitable? (Kugler 4)

NRC Response: The NRC has decided that excavation should not be considered ''construction,'' and that NRC permission is not required to undertake excavation activities. Accordingly, a response to this comment, to the extent that it is focused on NRC consideration of the impacts of excavation as an impact of the issuance of the LWA, construction permit, or combined license, is unnecessary. As discussed elsewhere in this document, the impacts of preconstruction activities performed by the ESP holder, construction permit, or combined license applicant must be described by the applicant in its environmental report, and must be considered in the cumulative impacts analysis.

Under the final LWA rule, the NRC's evaluation of site suitability must be made when it issues a construction permit or combined license, unless the applicant seeks, either as part of an LWA or in advance of the issuance of the construction permit or combined license under subpart F of part 2, an early decision on site suitability and/or the environmental impacts of construction and operation.

Comment: Has the NRC discussed these changes with key stakeholders like EPA, CEQ, and FERC? What do they think of this change? The commenter states that this is a major shift by the NRC away from its NEPA responsibilities, and believes that other agencies may have real problems with it beyond the basic NEPA issues. For example, will FERC commence a review for transmission lines if the power company hasn't submitted an application to the NRC to build the plant for which it's needed? Similarly, will the Corps of Engineers issue Section 404 permits to damage wetlands and dredge if there's no request to build a plant yet? Has anybody talked to them? (Kugler 5)

NRC Response: The NRC sought comments on the proposed rule from four Federal agencies who have historically been interested in NRC construction licensing from an environmental standpoint. Advance copies of the proposed rule as approved by the Commission were provided to the CEQ, the EPA, FERC, and the U.S. Department of the Interior, FWS, and copies of the proposed rule as published in the **Federal Register** were electronically transmitted to cognizant individuals in these agencies on the date of publication of the proposed rule in the **Federal Register** (ADAMS Accession Nos. ML062840445, ML062910051, and ML062910049). Additional telephone calls were made to describe the proposed rule and to answer any questions from these agency officials. As discussed earlier in this document, the NRC has received comments from the EPA, which has no objection to the change. NRC was advised by telephone that CEQ had no objection to the supplemental proposed LWA rule. The NRC has been advised by FERC that it ordinarily would not review transmission line routings for lines commencing at nuclear power facilities. The NRC believes that it has made reasonable efforts to obtain input from other cognizant Federal agencies, and none appear to share the concerns of the commenter. No change from the supplemental proposed LWA rule has been made as the result of this comment.

Comment: How does this change affect the current early site permit applicants? The commenter states that, for example, Exelon and Dominion submitted redress plans for all of the impacts of construction they'd be allowed to carry out before receiving a license to build and operate a plant. The petitioner also believes Southern submitted redress plans. Future applicants won't have to do this. What happens to the Exelon and Dominion redress plans? Do they get out of them now? If so, how does NRC explain that to all of the folks involved in those reviews who relied on the NRC's representations that a redress plan was required (*e.g.*, the public, Federal and State environmental regulatory agencies)? What happens to Southern, which is early in its review? (Kugler 6)

NRC Response: The final rule does not affect the NRC staff's approval of a full-scope redress plan to support LWA activities under the former LWA provisions in §§ 50.10 and 52.17. The three applicants for ESP which are currently before the NRC are required to meet the NRC's requirements in effect at the time of the application, with respect to the content of the application. If the final rule is adopted before ESPs are issued to the current ESP applicants, then the applicant may (but is *not* required to seek to revise its redress plan and seek NRC approval of a (narrowed) redress plan that meets the requirements of the final LWA rule. In such a case, the NRC would advise other Federal and State agencies of the change in NRC's regulatory requirements and any change in the scope of the approved redress plan which may be requested by the ESP applicant. Alternatively, upon issuance of the ESP, the ESP holder may request an amendment to its ESP, consistent with the recently-adopted revisions to 10 CFR part 52, to seek NRC approval of a (narrowed) redress plan which is consistent with the requirements of the final LWA rule. In such an event, the NRC would—as part of its routine procedures—consult with relevant Federal agencies. No change from the supplemental proposed LWA rule was made as a result of this comment.

Comment: Section 51.49(a)(2) should be revised to delete the requirement for an LWA applicant to state the need for an LWA. (Progress Energy 5)

NRC Response: The NRC disagrees with the commenter's proposal. An EIS should state the purpose and need for a proposed action. 10 CFR part 51, appendix A, paragraph 4; 40 CFR 1502.13. Inasmuch as the NRC is acting on a private entity's request in a licensing action, the purpose and need should be, in the first instance, determined by the applicant and be adopted by the NRC. No change was made to the final rule as a result of this comment.

Comment: Sections 51.20(b)(1) and (5), and 51.76(b) and (e) should be revised to allow the NRC staff the option of preparing and issuing an

environmental assessment (EA) if the environmental report shows no significant environmental impacts associated with LWA activities. (Progress Energy 6, 7, 8)

NRC Response: The NRC disagrees with the commenter's proposal. In preparing the supplementary proposed rule, the NRC considered the approach recommended by the commenter. However, the NRC rejected proposing such an approach because it would increase the perception of Federal segmentation, without any significant countervailing benefits, in terms of resources or time necessary to complete the NEPA process. Furthermore, the tiering concept, under CEQ regulations, involves sequential EISs rather than an EA followed by an EIS. The NRC believes that it would not be prudent to pursue a new approach to NEPA compliance, which may result in legal instability in an area of critical interest to industry stakeholders. The commenter presented no information in favor of its proposal. Accordingly, in the absence of new information suggesting that the Commission's initial determination should be revisited, the Commission declines to adopt the commenter's proposal. No change was made to the final rule as a result of this comment.

6. LWA Application Process

Comment: The commenter states that the NRC expects over 15 applications for COLs in the next 3 years or so. Perhaps it can staff up to meet the challenge of preparing those 15 EISs. But can it possibly handle 30? If most or all of the COL applicants choose to submit an LWA application too, which would seem likely, the NRC staff will have to prepare two EISs for each site. Has the NRC considered the resource implications? (And if an applicant chooses to go the ESP route for some reason, there will be three EISs.) (Kugler 7)

NRC Response: The commenter appears to believe that, under a revised LWA rule, the overall resources expended by the NRC in preparing EISs would increase over the current regulatory regime in a time frame that would exacerbate any problems that may be caused by limited NRC staff resources. The NRC disagrees with the commenter. The final LWA rule merely governs the timing of the NRC's environmental review of the overall action of licensing the construction and operation of a nuclear power plant, consistent with NEPA.

Taking the specific example identified by the commenter of a combined license applicant, who both seeks an LWA and references an ESP, it is possible—as the commenter correctly points out—that three EISs may be prepared in the worst case of a less than complete ESP EIS. However, the final LWA rule does not require the NRC staff to prepare entirely new, full-scope EISs at either the LWA or the combined license issuance stages. Instead, the EIS at the LWA stage would be limited to considering the environmental impacts of LWA activities only (assuming that the LWA ER is limited to providing information on the environmental impacts of LWA activities). This is consistent with NRC and CEQ regulations that allow incorporation by reference. Preparation of an LWA EIS limited to those subjects would not be redundant of the ESP EIS, inasmuch as the impacts of construction under this scenario were not addressed in the ESP EIS. Accordingly, there is no unnecessary expenditure of NRC resources attributable to anything in the LWA rule. When the combined license supplemental EIS is prepared, that EIS will be limited to considering new and significant information related to matters concerning construction and operation of the facility which was not addressed in the ESP EIS, unless the matter was discussed in the LWA EIS. In that limited case, the nature and description of the LWA construction impacts are deemed to be resolved, and these impacts would be considered in the overall balancing and decisionmaking on issuance of a combined license without the need to re-examine the nature and description of those LWA impacts. Again, the final LWA rule avoids redundant NRC review to the maximum extent practicable, inasmuch as the combined license EIS relies upon the determinations regarding the nature and impacts of construction and operation which were made at both the ESP and LWA stages. The overall scope of the NRC environmental review is not changed; it is merely the timing of the review for individual issues that is affected by the final LWA rule.

In sum, the NRC does not agree with the commenter that the LWA rule will, as the consequence of its provisions, result in an adverse impact upon the amount and timing of expenditure of NRC resources that cannot be managed in an effective manner. No change from the supplemental proposed LWA rule was made in response to this comment.

Comment: One commenter states that it appears that this new process will require major changes to NRC guidance documents such as RGs and the environmental standard review plan. Almost everything related to the impacts of construction will have to be completely rewritten. Can this be done before the first applicant uses the new rule? (Kugler 8)

NRC Response: The NRC agrees with the commenter that changes to the NRC RGs and the environmental standard review plan will be necessary to provide complete guidance to potential applicants and the NRC review staff with respect to implementation of the new LWA process in the final LWA rule. However, the NRC does not agree with the commenter's implicit assertion that the guidance must be finalized before the first applicant (or several applicants) can use the new LWA process in an effective manner. The NRC has, in many other instances, adopted rules containing substantial changes to its technical and regulatory requirements applicable to nuclear power reactors. Although the NRC does not wish to understate the challenge of implementing new rules, it is confident that the NRC working level technical staff, under careful and timely oversight by NRC staff management, will be able to implement the final LWA rule in a timely, consistent, and effective manner.

Comment: One commenter states that the supplemental proposed rule does not appear to allow an applicant to use both a phased LWA process and the hearing process for early partial decision on site suitability issues, thereby allowing an applicant who wishes to apply for an LWA to also submit the environmental information under § 2.101(a)(5) and proceed with an accelerated hearing on the full scope of environmental matters. The Commission should adopt changes in §§ 50.10(c)(2) and 2.101(a)(5) to allow an applicant to use both processes simultaneously. (NEI 5; Unistar 1)

NRC Response: The NRC believes that the commenter misunderstood the provisions of the supplemental proposed rule. The NRC's intent is that:

- Applicants may submit a two-part (phased) application for an LWA in advance of the application for the underlying combined license or construction permit, *see* § 2.101(a)(9).
- The environmental information submitted in the LWA portion of the application may either be limited to the LWA activities requested, or the full scope of construction and operation impacts, *see* § 51.49(b) and (f).
- An LWA applicant may seek an early decision on siting and environmental matters. If the LWA is submitted in advance of the underlying construction permit or combined license application, the procedures in 10 CFR part 2, subpart F, §§ 2.641 through 2.649 apply. If the LWA is submitted as part of (or after) the construction permit or

combined license application, then the procedures in subpart F, §§ 2.601 through 2.629 would apply because this is the ordinary procedure for obtaining an early decision on siting and environmental matters under the existing provisions of subpart F.

The NRC does not believe the specific language changes to the proposed rule described by the commenter are necessary to accomplish these three objectives. Accordingly, the Commission declines to adopt the changes proposed by the commenter, and no change from the supplemental proposed LWA rule was made in response to this comment.

Comment: One commenter proposed that the timing provisions in 10 CFR 2.101(a)(5), requiring that each part of a two-part combined license application be submitted within 6 months of each other, should be revised to be consistent with 10 CFR 2.101(a)(9) of the supplemental proposed rule, which permits the LWA application to be submitted up to 12 months in advance of the underlying combined license or construction permit. The commenter believes that additional conforming changes should be made to implement this concept, including changes in § 50.10(c)(2). (Unistar 2) Another commenter made the same proposal, but separately suggested that the overall time between parts of applications be lengthened to 18 months. (NEI 6)

NRC Response: The NRC agrees with the commenters that the timing provisions should be consistent. Furthermore, the NRC agrees with the second commenter (NEI) that the overall time between parts of applications may be lengthened to 18 months. The 6 month limitation in former § 2.101(a)(5) for two-part applications was set many years ago and reflected internal NRC administrative considerations, including maximizing efficiency and ensuring continuity of review oversight. The 12-month limitation between submission of the LWA application and the underlying combined license or construction permit application, as proposed in the supplemental proposed LWA rule, was based upon the same considerations, as well as environmental/NEPA considerations. The NRC did not want the time between the initial submission of LWA environmental information and the subsequent consideration of the overall environmental impacts to be lengthened to the point that there would be a substantial likelihood of new and significant information that would require updating. A 12-month limitation was established as a reasonable limitation. No consideration was given to having a consistent limitation in both existing paragraph (a)(5) and proposed paragraph (a)(9).

However, after further consideration based upon public comments, the NRC concludes that the 6-month limitation in paragraph (a)(5) and the proposed 12-month limitation in paragraph (a)(9) are unduly restrictive. The NRC believes that administrative efficiency can be maintained with longer time periods between parts of applications, in view of modern information technology, NRC's restructuring of the licensing process in part 52, the NRC's recent adoption of changes to part 2, subpart D and part 52, appendix N, and the NRC's projected use of design-centered reviews. In addition, the NRC understands, in response to informal inquiries with EPA, that 18 months is well within the time period considered by EPA to be acceptable for referencing a previously-prepared EIS without updating. For these reasons, the Commission is adopting an 18-month limitation in paragraphs (a)(5) and (a)(9) of § 2.101.

7. Other Topics

Comment: The NRC should include a ''grandfathering'' provision in the final rule to make clear that the final rule does not require any change to ESP applications filed before the effective date of the rule, such as supplementing the application to require a showing of technical qualifications. The NRC should also clarify that the final rule would not reduce or limit the authority that such applicants would be entitled to receive upon issuance of their ESPs under the current regulations (*e.g.*, perform construction of non-safety-related SSCs). (NEI 4, Dominion 1)

NRC Response: The NRC agrees with the commenters that the final LWA rule does not require any change to ESP applications filed before the effective date of the rule. Upon further consideration, the NRC has decided to include a ''grandfathering'' provision in the final rule which will provide that ESP applications which are under consideration as of the effective date of the final LWA rule, which include a request to conduct § 50.10(e)(1) activities, need not comply with the ''content of application'' requirements in the final rule.

The NRC does not agree with the commenter's view that the final rule and/or the SOC for the final rule should clarify that the current ESP applicants should be provided with the authority to conduct LWA activities under the former provisions of § 50.10(e)(1), that is, not be bound by the final LWA rule's provisions. The final LWA rule does allow excavation without an LWA. However, the NRC continues to believe that pile driving and other subsurface preparation should be considered construction, inasmuch as none of the comments received addressed this matter or brought information to the NRC's attention that suggests that the NRC's regulatory basis for its position should be reconsidered (the public comments received only addressed excavation *per se,* and did not mention pile driving or other subsurface preparation). In addition, as discussed elsewhere in this SOC, the NRC has redefined and limited the SSCs whose construction requires an LWA, construction permit, or combined license. Thus, the NRC believes that the current ESP applicants will have sufficient authority and flexibility under the final rule, without any grandfathering of the LWA provisions. Furthermore, regulatory stability from the standpoint of backfitting is not relevant, inasmuch as it has been the Commission's longstanding position that backfitting does not protect an applicant from changes to regulatory requirements.

Comment: The commenter states that proposed § 50.10(c)(3)(i) requires the LWA application to: (1) Describe the design and construction information otherwise required to be submitted for a combined license, but limited to the portions of the facility that are within the scope of the limited work authorization; and (2) Demonstrate compliance with ''technically relevant Commission requirements in 10 CFR Chapter I'' applicable to the design of those portions of the facility within the scope of the limited work authorization, is unduly vague. If specific technical requirements are deemed applicable, they should be justified and identified in the rule. (Dominion 3)

NRC Response: The NRC disagrees with the commenter that the language of § 50.10(c)(3)(i) (§ 50.10(d)(3)(i) in the final LWA rule) is unnecessarily vague, or that it would be practical for the rule language to specify the technical requirements which are deemed applicable. The technical requirements that are applicable will depend upon the scope and nature of LWA activities requested. Furthermore, this regulatory requirement is modeled on the provisions of former §§ 50.10(e)(2), (e)(3)(i), and (e)(3)(ii), for which the NRC and the nuclear power industry has had decades of experience. The commenter did not present either alternative language that would address its concern with vagueness, or otherwise present a list of NRC technical requirements that should be specified as applicable. The original commenter whose submission led to this

rulemaking did not identify this aspect of the former rule as presenting a problem which should be addressed as part of the reformulated rule. To modify the rule language to include a list of technically relevant requirements would likely require renoticing of this aspect of the rule for public comment, which would delay issuance of the rule with little benefit, given the 30+ years of experience in implementing analogous rule language in the former versions of § 50.10. Accordingly, the Commission declines to adopt the commenter's proposal, and no change from the supplemental proposed LWA rule was made in response to this comment.

Comment: The commenter states that the finding of technical qualifications should be limited to LWA activities applicable to safety-related activities, because there are no design, construction, or technical requirements in the NRC's rules applicable to non-safety-related construction work. (Dominion 4)

NRC Response: The NRC disagrees with the commenter's proposal, inasmuch as it is based on the longstanding industry misconception that the NRC's regulations in part 50 apply only to ''safety-related'' SSCs and activities relevant to those SSCs, as that term is defined in 10 CFR 50.2. This is not a correct understanding. For example, the general design criteria in 10 CFR part 50, appendix A, apply to SSCs ''important to safety; that is, structures, systems, and components that provide reasonable assurance that the facility can be operated without undue risk to the health and safety of the public.'' *Id.* (first introductory paragraph). There are numerous other regulations applicable to the design, construction, and operation of a nuclear power facility whose applicability extends beyond ''safety-related'' SSCs. It is consistent with Section 182.a of the AEA and the NRC's past practice that a technical qualifications finding be made as part of the finding necessary for NRC issuance of an LWA. Accordingly, the NRC declines to adopt the commenter's proposal, and no change from the supplemental proposed LWA rule was made in response to this comment.

Comment: The commenter states that the reference in § 50.10(d)(2) to § 52.17(c) should be changed to § 50.10(c)(3)(iii), inasmuch as the requirement for a redress plan has been removed from § 52.17(c) and relocated in § 50.19(c)(3)(iii). (Progress Energy 3)

NRC Response: The NRC agrees with the substance of this comment. Inasmuch as the proposed rule has been reorganized in the final rule, the final rule refers to the appropriate paragraph.

Comment: The commenter states that an LWA is not the functional equivalent of an ESP. There are significant differences between them, and the time and level of NRC staff effort necessary to conduct an LWA review should not be as great as for an ESP review. The NRC should clarify the differences between an LWA and ESP in the SOC for the final rule. (Areva 4)

NRC Response: NRC agrees with the commenter that there are some significant differences between an LWA review and an ESP. In particular, issuance of an LWA does not require the NRC to make a finding with respect to site suitability from either a safety or environmental standpoint (although the LWA applicant may, under §§ 2.101(a)(9), 52.17, and 51.49 of the final rule, submit an environmental report addressing the issues of alternative, obviously superior sites, and the impacts of construction and operation of the nuclear power plant, in which case the NRC would make a finding on all environmental matters, including alternative, obviously superior sites). The NRC has modified the section-by-section discussion of the SOC to make clearer the requirements for obtaining an LWA.

Comment: The commenter states that proposed §§ 51.76(e) and 51.49(e) are slightly inconsistent, in that the former refers to the LWA applicant's authority to incorporate by reference an earlier EIS prepared for the same site if a construction permit was issued but construction never commenced. By contrast, § 51.49(e) refers to the LWA applicant's environmental report to reference an earlier EIS prepared for the same site if a construction permit was issued but construction was never completed. The commenter also states that inasmuch as the NRC intended to adopt the more expansive concept embodied in § 51.49(e), the final rule should modify § 51.76(e) to be consistent to refer to construction not being ''completed.'' (NEI 3)

NRC Response: The NRC agrees, and the language of § 51.76(e) has been conformed in the final rule. In addition, conforming changes were made in the subtitles of §§ 51.49(e) and 51.76(e), and the relevant SOC discussion.

III. Discussion

A. History of the NRC's Concept of Construction and the LWA

Section 101 of the AEA prohibits the manufacture, production, or use of a commercial nuclear power reactor, except where the manufacture, production, or use is conducted under a license issued by the NRC. While construction of a nuclear power reactor is not mentioned in Section 101, Section 185 of the AEA requires that the NRC grant construction permits to applicants for licenses to construct or modify production or utilization facilities, if the applications for such permits are acceptable to the NRC. However, the term construction is not defined anywhere in the AEA or in the legislative history of the AEA.

To prevent the construction of production or utilization facilities before a construction permit is issued, the NRC proposed a regulatory definition of construction in 1960 (25 FR 1224; February 11, 1960). The definition of construction was adopted in a final rule that same year and codified in 10 CFR 50.10(b) (25 FR 8712; September 9, 1960). As promulgated, § 50.10(b) stated that no person shall begin the construction of a production or utilization facility on a site on which the facility is to be operated until a construction permit had been issued. Construction was defined in § 50.10(b) as including:

> * * * pouring the foundation for, or the installation of, any portion of the permanent facility on the site; but [not to] include: (1) Site exploration, site excavation, preparation of the site for construction of the facility and construction of roadways, railroad spurs, and transmission lines; (2) Procurement or manufacture of components of the facility; (3) Construction of non-nuclear facilities (such as turbogenerators and turbine buildings) and temporary buildings (such as construction equipment storage sheds) for use in connection with the construction of the facility; and (4) With respect to production or utilization facilities, other than testing facilities, required to be licensed pursuant to Section 104a or Section 104c of the Act, the construction of buildings which will be used for activities other than operation of a facility and which may also be used to house a facility. (For example, the construction of a college laboratory building with space for installation of a training reactor is not affected by this paragraph.) (25 FR 8712; September 9, 1960)

The definition of construction remained unchanged until 1968, when the driving of piles was specifically excluded from the definition (33 FR 2381; January 31, 1968). This change was implemented by amending § 50.10(b)(1) to read: ''Site exploration, site excavation, preparation of the site for construction of the reactor, *including the driving of piles*, and construction of roadways, railroad spurs, and transmission lines.'' The rationale for this change, as articulated in the proposed rule (32 FR 11278; August 3, 1967), seems to have been that the driving of piles was closely related to ''preparation of the site for

construction'' and that the performance of this type of site preparation activity would not affect the NRC's subsequent decision to grant or deny the construction permit. With the exception of the exclusion of the driving of piles from the definition of construction in 1968, the NRC's interpretation of the scope of activities requiring a construction permit *under the AEA* has remained largely unchanged.

However, following the enactment of the NEPA, as amended, the NRC adopted a major amendment to the definition of construction in § 50.10 (37 FR 5745; March 21, 1972). In that rulemaking, the NRC adopted a much more expansive concept of construction. Specifically, a new § 50.10(c) was adopted stating that no person shall effect ''commencement of construction'' of a production or utilization facility on the site on which the facility will be constructed until a construction permit has been issued. ''Commencement of construction'' was defined as:

> * * * any clearing of land, excavation, or other substantial action that would adversely affect the natural environment of a site and construction of non-nuclear facilities (such as turbogenerators and turbine buildings) for use in connection with the facility, but does not mean: (1) Changes desirable for the temporary use of the land for public recreational uses, necessary boring to determine foundation conditions or other preconstruction monitoring to establish background information related to the suitability of the site or to the protection of environmental values; (2) Procurement or manufacture of components of the facility; and (3) With respect to production or utilization facilities, other than testing facilities, required to be licensed pursuant to Section 104a or Section 104c of the Act, the construction of buildings which will be used for activities other than operation of a facility and which may also be used to house a facility * * * (37 FR 5748; March 21, 1972)

The NRC explained that expansion of the NRC's permitting authority was:

> [C]onsistent with the direction of the Congress, as expressed in Section 102 of the NEPA, that, to the fullest extent possible, the policies, regulations, and public laws of the United States shall be interpreted and administered in accordance with the policies set forth in that Act. Since site preparation constitutes a key point from the standpoint of environmental impact, in connection with the licensing of nuclear facilities and materials, these amendments will facilitate consideration and balancing of a broader range of realistic alternatives and provide a more significant mechanism for protecting the environment during the earlier stages of a project for which a facility or materials license is being sought. (37 FR 5746; March 21, 1972)

Thus, the NRC's interpretation of its responsibilities under NEPA, not the AEA, was the driving factor leading to its adoption of § 50.10(c).[3]

The NRC issued § 50.10(e) two (2) years after the expansion of the NRC's permitting authority resulting from the issuance of § 50.10(c) (39 FR 14506; April 24, 1974). This provision created the current LWA process, which was added to allow site preparation, excavation, and certain other onsite activities to proceed before issuance of a construction permit. Before the issuance of § 50.10(e), NRC permission to engage in site preparation activities before a construction permit was issued could only be obtained via an exemption issued under § 50.12. Section 50.10(e) allowed the NRC to authorize the commencement of both safety-related (known as ''LWA–2'' activities) and non-safety-related (known as ''LWA–1'' activities) onsite construction activities before issuance of a construction permit, if the NRC had completed a site suitability report and a final environmental impact statement (FEIS) on the issuance of the construction permit, and the presiding officer in the construction permit proceeding had made the requisite site suitability, environmental and, in the case of an LWA–2, safety-related findings.

B. NRC's Concept of Construction and the AEA

Industry stakeholders have stated that the business environment, today and in the foreseeable future, requires that new plant applicants minimize the time interval between a decision to proceed with the construction of a nuclear power plant and the start of commercial operation. To achieve that goal, these stakeholders have indicated that non-safety-related ''LWA–1'' activities would need to be initiated up to 2 years before the activities currently defined as ''construction'' in § 50.10(b). NEI believes that the current LWA approval process would constrain the nuclear industry's ability to use modern construction/management practices and needlessly add 18 months to estimated construction schedules for new plants that did not reference an early site permit with LWA authority.

Based upon the representations of the industry, the NRC agrees that the agency's regulatory processes should be revised and optimized to ensure that these stakeholder's needs are met, consistent with the NRC's statutory obligations and in a manner that is fair to all stakeholders. Accordingly, the NRC is adopting this LWA final rule which revises 10 CFR 50.10, and makes conforming changes in 10 CFR parts 2, 51, and 52. The LWA final rule narrows the scope of activities requiring permission from the NRC in the form of an LWA by eliminating the concept of ''commencement of construction'' formerly described in § 50.10(c) and the authorization formerly described in § 50.10(e)(1). Instead, under the final LWA rule, NRC authorization would only be required before undertaking activities that have a reasonable nexus to radiological health and safety and/or common defense and security for which regulatory oversight is necessary and/or most effective in ensuring reasonable assurance of adequate protection to public health and safety or common defense and security. While the NRC's redefinition of ''construction'' will result in fewer activities requiring NRC permission in the form of an LWA, construction permit, or combined license, it will also define certain activities (such as the driving of piles) that are currently excluded from the regulatory definition of construction given in § 50.10(b), as construction requiring such NRC review and approval.

The LWA final rule also provides an optional, phased application and approval procedure for construction permit and combined license applicants to obtain LWAs. An applicant may either submit its LWA application jointly with a complete construction permit or combined license application, or submit it in two parts, with the information relevant to issuance of an LWA submitted up to 18 months in advance of the remainder of the application addressing the underlying construction permit or combined license. Furthermore, under the LWA final rule, the NRC need not address the suitability of the site for the operation of a nuclear power plant before issuing an LWA. Site suitability will be addressed as part of the NRC's consideration of the underlying construction permit or combined license. Moreover, under the LWA final rule the applicant could seek a separate determination on site suitability issues under subpart F of 10 CFR part 2.

The phased approach in the final LWA rule also provides for an environmental review and approval

[3] *See Carolina Power and Light Company* (Shearon Harris Nuclear Power Plant, Units 1, 2, 3 and 4), 7 AEC 939, 943 (June 11, 1974) (hereinafter *Shearon Harris*) (''The regulations were revised in 1972, not because of any requirements of the Atomic Energy Act, but rather to implement the precepts of NEPA which had then recently been enacted.''); *Kansas Gas and Electric Company* (Wolf Creek Nuclear Generating Station, Unit No. 1), 5 NRC 1, 5 (January 12, 1977) (explaining that NEPA led the AEC to amend its regulations in several respects, including the changes to § 50.10(c)).

process for LWA requests which allows the NRC to grant an applicant permission to engage in LWA activities after completion of a limited EIS addressing those activities, but before completion of the comprehensive EIS addressing the underlying request for a construction permit or combined license. The final LWA rule also delineates the environmental review required in situations where the LWA activities are to be conducted at sites for which the NRC has previously prepared an EIS for the construction and operation of a nuclear power plant, and for which a construction permit was issued, but construction of the plant was never completed.

The NRC concludes that the LWA final rule is fully consistent with the NRC's radiological health and safety and common defense and security responsibilities under the AEA.[4] As previously mentioned, the term ''construction'' is not defined in the AEA or in the legislative history of the AEA. Instead of expressly defining the term in the AEA, Congress entrusted the agency with the responsibility of determining what activities constitute construction.[5] The NRC has determined that the site-preparation activities that would no longer be considered construction under this proposed rule do not have a reasonable nexus to radiological health and safety, or the common defense and security. Accordingly, the NRC concludes that its definition of the term, ''construction,'' is reasonable and complies with the AEA.

The NRC also concludes that issuance of the LWA in advance of a consideration of site suitability is reasonable and complies with the AEA. Any work under the LWA is done at the risk of the LWA holder.

C. NRC's LWA Rule Complies With NEPA

1. NRC's Concept of Construction is Consistent With the Legal Effect of NEPA

The definition of construction in the LWA final rule is consistent with the legal effect of NEPA. Section 50.10(c) was originally added to part 50 due to the interpretation that the enactment of NEPA, not a change in the powers given to the agency in the AEA, required the NRC to expand its permitting/licensing authority. However, subsequent judicial decisions have made it clear that NEPA is a procedural statute and does not expand the jurisdiction delegated to an agency by its organic statute.[6] Therefore, while NEPA may require the NRC to consider the environmental effects caused by the exercise of its permitting/licensing authority, the statute cannot be the source of the expansion of the NRC's authority to require construction permits, combined licenses, or other forms of permission for activities that are not reasonably related to radiological health and safety or protection of the common defense and security. Since NEPA cannot expand the NRC's permitting/licensing authority under the AEA, the elimination of the blanket inclusion of site preparation activities in the definition of construction under § 50.10(c) does not violate NEPA.

2. NRC's Concept of the ''Major Federal Action'' Is Consistent With NEPA Law

The AEA does not authorize the NRC to require an applicant to obtain permission before undertaking site preparation activities that do not implicate radiological health and safety or common defense and security. As a general matter, the NRC considers these activities to involve ''non-Federal action'' for the purposes of implementing its NEPA responsibilities. Generally, non-Federal actions are not subject to the requirements of NEPA.[7] Further, the NRC believes that these non-Federal site preparation activities would not generally be ''federalized'' if the NRC were to ultimately grant a combined license or construction permit. The grant of a construction permit or combined license by the NRC is not a legal condition precedent to these non-Federal, site preparation activities. While the NRC recognizes that there may be a ''but for'' causal relationship between certain non-Federal site preparation activities and the major Federal action of issuing a construction permit or combined license, such a ''but for'' causal relationship is not sufficient to require non-Federal, site preparation activities to be treated as Federal action for the purposes of NEPA.[8]

In addition, under the narrowed definition of construction in the LWA final rule, the NRC concludes that it does not have the ability or discretion to influence or control the non-Federal, site preparation activities to the extent that its influence or control would constitute practical or factual veto power over the non-Federal action. Further, the NRC does not believe that allowing the non-Federal, site preparation activities to be undertaken would restrict its consideration of alternative sites or the need to assess whether there is an ''obviously superior'' site. Specifically, while the NRC recognizes that narrowing the definition of construction may result in substantial changes to the physical properties of a site, many of the fundamental elements that enter into a determination of the existence of an ''obviously superior'' site would not be affected by the changes to those physical properties. For example, seismology would not be affected in any significant way by the non-Federal site preparation activities. However, while the effects caused by the non-Federal, site preparation activities would not be considered effects of the NRC's licensing action, the effects of the non-Federal activities would be considered during any subsequent ''cumulative impacts'' analysis. Specifically, the effects of the non-Federal activities will be considered in order to establish a baseline against which the incremental effect of the NRC's major Federal action (*i.e.*, issuing an LWA, construction permit, or combined license) would be measured. These incremental impacts may be additive or synergistic. To ensure that the NRC has sufficient information to perform the cumulative impacts analysis in a timely fashion, the final LWA rule includes a requirement, in § 51.45(c), for the environmental report submitted by an applicant for an ESP, construction permit, or combined license to include a description of impacts of the applicant's preconstruction activities at the proposed site (*i.e.*, the activities listed in paragraph (b)(1) through (8) in the definition of construction contained in § 51.4) that are necessary to support the construction and operation of the facility which is the subject of the LWA, construction permit, or combined license application, and an analysis of the cumulative impacts of the activities to be authorized by the LWA, construction permit, or combined license in light of the preconstruction impacts.

3. NRC's Phased Approval Approach Is Not Illegal Segmentation Under NEPA

The phased application and approval of LWAs does not raise the concerns underlying the prohibition of segmentation under NEPA law. Generally, the NEPA segmentation

[4] *See State of New Hampshire* v. *Atomic Energy Commission,* 406 F.2d 170, 174–75 (1st Cir. 1969).

[5] *Shearon Harris,* 7 AEC 939.

[6] *See,e.g., Robertson* v. *Methow Valley Citizens Council,* 490 US 332, 350–52 (1989); *Natural Resources Defense Counsel* v. *U.S. Environmental Protection Agency,* 822 F.2d 104, 129 (D.C. Cir 1987); *Kitchen* v. *Federal Communications Commission,* 464 F.2d 801, 802 (D.C. Cir. 1972).

[7] *Save the Bay, Inc.,* v. *U.S. Army Corps of Engineers,* 610 F.2d 322, 326 (5th Cir. 1980).

[8] *See Landmark West!* v. *U.S. Postal Service,* 840 F. Supp. 994, 1006 (S.D.N.Y. 1993) (citing cases).

problem arises when the environmental impacts of projects are evaluated in a piecemeal fashion and, as a result, the comprehensive environmental impacts of the entire Federal action are never considered or are only considered after the agency has committed itself to continuation of the project. Another associated segmentation problem arises when pieces of a Federal action are evaluated separately and, as a result, none of the individual pieces are considered ''major Federal actions'' requiring an EIS.[9]

Neither of these segmentation concerns are presented by the approach embodied in the LWA final rule. First, under both LWA application options in the LWA final rule, the environmental effects associated with the LWA activities and the project as a whole (*i.e.*, issuance of a construction permit or combined license) would be evaluated in an EIS. Therefore, the segmentation problem of considering a project in phases, thereby avoiding completion of an EIS, is not an issue. In addition, all of the environmental impacts associated with the construction and operation of the proposed plant, *including the impacts associated with the LWA activities*, would be considered together, through incorporation by reference, in the EIS prepared on the construction permit or combined license application. This comprehensive consideration of environmental impacts would take place *before* the NRC is committed to issuing any construction permit or combined license. The fact that the NRC will not have prejudged the ultimate decision of whether to grant a construction permit or a combined license by issuing the LWA, coupled with the requirement that the site redress plan be implemented in the event that the permit or license is ultimately not issued, also ensures that issuance of the LWA would not foreclose reasonable alternatives.

In addition, the proposed application and approval process is consistent with the NRC's previously expressed position that NEPA does not, as a general matter, prohibit an agency from undertaking part of a project without a complete environmental analysis of the whole project.[10] The key factors used to support the Commission's position in *Clinch River* were: (1) That the site preparation activities in that case would not result in irreversible or irretrievable commitments to the remaining portions of the project, and (2) The environmental impacts of the site preparation activities allowed in that case were substantially redressable.[11]

These considerations are reflected in the provisions of the LWA final rule. Specifically, § 50.10(f) states that any activity undertaken pursuant to an LWA are entirely at the risk of the applicant, that the issuance of the LWA has no bearing on whether the construction permit or combined license should be issued, and that the EIS associated with the underlying request will not consider the sunk costs associated with the LWA activities. In addition, § 50.10(d)(3) requires an applicant requesting an LWA to submit a plan for redress of the activities permitted by the LWA, which would to be implemented in the event that the LWA holder is ultimately not issued a construction permit or combined license. The redress plan would achieve this objective by addressing impacts resulting from LWA activities (*e.g.*, pile driving, placement of permanent retaining walls in excavations, and construction of foundations for SSCs within the scope of the LWA final rule). Impacts associated with pre-LWA activities would not be addressed in the redress plan. Further, § 50.10(f) requires that the site redress plan be implemented within a reasonable time and that the redress of the site occur within 18 months of the Commission's final decision denying a construction permit or combined license.

It should be noted that while redress of site impacts may have the practical effect of mitigating some environmental impacts, the redress plan is not a substitute for a thorough evaluation of environmental impacts, or development of mitigation measures that may be necessary to provide relief from environmental impacts associated with the proposed LWA activities. The primary purpose of the site redress plan is to ensure that impacts associated with any LWA activities performed at the site will not prevent the site from being used for a permissible, non-nuclear alternative use. In this way, the redress plan helps to preserve the NRC's ability to objectively evaluate an application for a construction permit or combined license, despite the fact that LWA activities have been undertaken at the site.

In sum, the LWA final rule does not constitute unlawful segmentation in view of the provisions ensuring that the issuance of an LWA does not predispose or bias the NRC's decision on the underlying construction permit or combined license application.

D. Consideration of Activities as ''Construction''

1. Driving of Piles

A significant change proposed in the LWA supplemental proposed rule is the inclusion of the driving of piles for certain SSCs in the definition of construction that are not currently defined as construction in § 50.10(b). Although the driving of piles was not expressly included in the definition of ''construction'' contained in § 50.10(b) before the amendment of § 50.10(b)(1) in 1968, this activity was generally considered to be encompassed in the existing definition of construction at that time (*See* 33 FR 2381; January 31, 1968). The 1967 proposed rule suggested that the driving of piles be expressly excluded from the definition of construction because that activity ''is closely related to, and may be appropriately included in'' site preparation activities, which were not considered construction (32 FR 11278; August 3, 1967).[12] The rationale for non-inclusion of pile driving (and site preparation activities generally) in the definition of construction seems to have been that these activities would have no effect on the NRC's ultimate decision to grant or deny a construction permit, and that these activities were undertaken entirely at the applicant's risk. *See* 32 FR 11278; August 3, 1967.

The NRC does not believe that the exclusion of pile driving from the definition of construction should hinge on these factors. The Commission believes that the driving of piles for certain SSCs (as discussed separately below) has a reasonable nexus to radiological health and safety, and/or common defense and security and, therefore, is properly considered ''construction'' as that term is used in Section 185 of the AEA. In addition, the inclusion of these activities in the definition of construction (*i.e.*, requiring an LWA before they are undertaken), coupled with the phased approval process suggested in this supplemental proposed rule, would allow for early resolution of the safety issues associated with these activities. Early resolution of safety issues is consistent with the general rationale underlying the licensing and permitting processes provided in 10 CFR part 52. Accordingly, the final rule's definition of construction includes the driving of piles for certain SSCs.

[9] Daniel R. Mandelker, *NEPA Law and Litigation,* 9–25 (2nd ed. 2004).

[10] *See Tennessee Valley Authority* (Clinch River Breeder Reactor Plant), 16 NRC 412, 424 (August 17, 1982) (hereinafter *Clinch River*).

[11] *Id.*

[12] The proposed rule language was issued without modification in the final rule. (33 FR 2381; January 31, 1968.)

2. Excavation

The LWA supplemental proposed rule would have included excavation within the definition of construction. The inclusion of excavation within the ambit of construction was based upon two factors: (1) Excavation activities in the past have uncovered potentially adverse geologic, soil, and hydrological conditions not anticipated by the construction permit applicant, which have resulted in design changes; and (2) Excavation activities in the past have caused unanticipated damage to surrounding native rock, which had to be corrected by the construction permit holder. The NRC believed that, in these situations, these considerations provided the ''reasonable nexus to radiological health and safety and/or common defense and security'' necessary to include excavation in the definition of construction.

Upon consideration of stakeholder comments and further evaluation, the NRC has determined that it is not necessary to include excavation within the definition of construction, thus requiring some kind of NRC review and approval before undertaking excavation, to ensure public health and safety or common defense and security in the situations noted previously. With respect to geologic, soils, and hydrological matters, prior NRC review and approval of excavation is not necessary to ensure that any adverse geologic, soil, or hydrological conditions that result in the need for design changes or some other form of mitigation are considered in NRC's review of the associated LWA, construction permit, or combined license application. In the situation where a potential applicant performs excavation activities before submitting its LWA, construction permit, or combined license application, 10 CFR 52.6(a) requires that information provided to the Commission by an applicant for a license be complete and accurate in all material respects. In the situation where an applicant performs excavation activities after submitting its LWA, construction permit, or combined license application, 10 CFR 52.6(b) requires the applicant to notify the Commission of information identified by the applicant as having, for the regulated activity, a significant implication for public health and safety or common defense and security. The staff believes that 10 CFR 52.6 provides an equally-acceptable way of ensuring public health and safety if excavation is eliminated from the definition of construction for those limited situations where excavation activities uncover potentially adverse geologic, soil, and hydrological conditions not anticipated by the applicant, or if excavation activities cause unanticipated damage to the surrounding native rock. The LWA, construction permit, and combined license applicant, as applicable, would be responsible—as is currently the case—for adequately describing the geologic, soil, and hydrologic conditions of the site. The difference with the approach in this final rule is that the approved site description will, in many cases, be based upon actual knowledge of the conditions as revealed or confirmed by the excavation activities, and not only on reasonable assumptions based upon extrapolations from test borings and other indirect information. Therefore, in many cases, the actual foundation and structural design to be approved at the construction permit or combined license stage would be based upon actual geologic, soils, and hydrological information as revealed or confirmed by the excavation.

For these reasons, the Commission concludes that existing regulatory mechanisms provide reasonable assurance of public health and safety and common defense and security without imposition of the regulatory mechanism of prior NRC review and approval of excavation activities. Accordingly, the LWA final rule does not define excavation as being within the ambit of construction.

3. Temporary Structures and Activities in the Excavation

Construction, under the LWA final rule, includes the placement/installation of backfill, concrete, or permanent retaining walls within an excavation. These activities involve the placement/installation of permanent parts of the overall facility, and therefore are properly considered ''construction.'' By contrast, the placement/installation of temporary SSCs which will not become part of the final facility, and therefore are removed, should not be treated as ''construction,'' inasmuch as they have no ongoing nexus to radiological health and safety or common defense and security. Accordingly, activities in the excavation for SSCs within the scope of construction, such as the placement/installation of temporary drainage, erosion control, retaining walls, environmental mitigation, are not considered to be within the purview of ''construction,'' so long as these temporary items are removed from the excavation before fuel load. The NRC chose fuel loading as a convenient, well understood and clear event for delineating the time by which temporary SSCs must be removed from the excavation, in order for those temporary SSCs to be excluded from the definition of construction.

4. Construction SSCs

The LWA supplemental proposed rule revised the former definition of construction in 10 CFR 50.10(c) to include the onsite, in-place fabrication, erection, integration, or testing of any SSC required by the Commission's rules and regulations to be described in the site safety analysis report, preliminary safety analysis report, or final safety analysis report. This definition of construction included basically all SSCs of a facility, except for those SSCs that were specifically excluded by the proposed definition (*e.g.*, potable water systems). However, as stated in the supplemental proposed rule, the Commission has determined that construction should include all of the activities that have a reasonable nexus to radiological health and safety, or common defense and security.

Upon consideration of stakeholder comments and further evaluation, the NRC has determined that there may be some SSCs of a facility which are required to be described in the FSAR, but which do not have a reasonable nexus to radiological health and safety or the common defense and security. These SSCs are those which are required to be described in the FSAR to provide contextual information for understanding the overall design and operation of the facility, but which do not actually directly affect the radiological health and safety of the public or the common defense and security, and their indirect effect on such health and safety or common defense and security is so low as to be considered negligible. The determination of SSCs which do not have a reasonable nexus to radiological health and safety or common defense and security depends on the design of the facility. An example SSC is the administration building. However, an administration building that includes the technical support center would fall within the scope of SSCs covered by the definition of construction. In sum, the NRC has clarified and narrowed the scope of SSCs falling within the scope of construction to exclude those SSCs which have no reasonable nexus to radiological health and safety or common defense and security.

For the LWA final rule, the scope of SSCs falling within the definition of construction was derived from the scope of SSCs that are included in the program for monitoring the effectiveness of maintenance at nuclear power plants, as

defined in 10 CFR 50.65(b). This definition is well understood and there is good agreement on its implementation. The NRC has supplemented the definition in § 50.65(b) to include the SSCs that are necessary to comply with 10 CFR 50.48 and criterion 3 of 10 CFR part 50, appendix A, and the onsite emergency facilities, that is, technical support and operations support centers, that are necessary to comply with 10 CFR 50.47 and 10 CFR part 50, appendix E. These SSCs were added because they have a reasonable nexus to radiological health and safety. The SSCs that are necessary to comply with 10 CFR part 73 were added because they are required for the common defense and security.

E. Phased Application and Approval Process

Another significant change in this final rule is the modification of the procedure for obtaining LWA approval by implementing an optional phased application and approval process. Specifically, § 2.101(a)(9) allows applicants for construction permits and combined licenses the option of submitting either: (1) A complete application, or (2) a two-part application with part one including information required for the NRC to make a decision on the applicant's request to undertake LWA activities, and part two containing all other information required to obtain the underlying license or permit. The final rule allows the NRC to consider the environmental impacts attributable to the requested LWA activities separately, either as part of a comprehensive EIS in the case where a complete application is submitted, or in a separate EIS addressing only the LWA activities in the case of a two-part application. After consideration of the environmental impacts and the relevant safety-related issues associated with the LWA activities, the NRC may allow the applicant to undertake the LWA activities, even if the EIS on the underlying request (*i.e.*, construction permit or combined license) is not complete.

The NRC believes that this phased application and approval process is more efficient because it prevents unnecessary delay in nuclear power plant construction schedules. This delay would result if issuance of an LWA for safety-related activities were delayed until the final EIS and adjudicatory hearing on the entire underlying license application were complete. In addition, the final rule's application and approval process should result in the timely resolution of relevant safety and environmental issues at an earlier stage in the licensing process. As previously discussed, the NRC believes that these efficiencies can be gained without compromising the agency's NEPA responsibilities, as the phased approach presented in this supplemental proposed rule does not constitute illegal segmentation.

F. EIS Prepared, but Facility Construction Was Not Completed

The LWA final rule also addresses the situation where a request is made to perform LWA activities at a site for which an EIS has previously been prepared for the construction and operation of a nuclear power plant, and a construction permit has been issued, but construction of the plant was never completed. In this special situation, the final rule allows an applicant to reference the previous EIS in its environmental report, but requires that the applicant identify any new and significant information material to the matters required to be addressed in the proposed § 51.49(a). Further, in these special cases the final rule provides that the NRC will incorporate by reference the previous EIS when preparing its draft EIS on the LWA activities. The draft EIS on the LWA request is limited to the consideration of any new and significant information dealing with the environmental impacts of construction, relevant to the activities to be carried out under the LWA. Further, in a hearing on issuance of an LWA at such sites, the presiding officer is limited to determining whether there is new and significant information pertaining to the environmental impacts of the construction activities encompassed by the previous EIS that are analogous to the activities to be conducted under the LWA. The presiding officer would evaluate new and significant information in determining whether an LWA should be issued as proposed by either the Director of the Office of New Reactors or the Director of the Office of Nuclear Reactor Regulation, as applicable.

This provision is designed to gain efficiency by using existing EISs to evaluate the environmental impacts of activities to be performed under an LWA. The Commission believes that this practice is appropriate because the referenced environmental review will come in the form of an FEIS prepared by NRC staff for sites on which permission to construct a nuclear power plant was ultimately granted by the Commission. The Commission understands that the activities proposed in a current LWA request may be different from the activities proposed and analyzed in the previous FEIS referenced by an applicant and relied upon by NRC staff. However, it is the Commission's intent that if these differences result in significant changes to the environmental impacts caused by the LWA activities currently proposed by the applicant, then the differences should be considered ''new and significant information'' material to the environmental impacts that may reasonably be expected to result from the LWA activities. Therefore, these differences should be addressed in the applicant's environmental report, analyzed by the NRC staff in a supplement to the existing FEIS, and considered by the presiding officer.

Further, for the reasons previously discussed in Section C.3 of this document, the Commission does not believe that authorizing LWA activities before completion of the FEIS on the combined license or construction permit will have the effect of prejudging the license/permit, or foreclosing reasonable alternatives.

G. Commission Action on PRM–50–82

As discussed previously, the Commission is treating the May 25, 2006, comments of NEI on the March 2006 proposed part 52 rule as a petition for rulemaking, which has been designated PRM–50–82. The petition was effectively granted when the supplemental proposed LWA rule was published (71 FR 61330; October 17, 2006). With the adoption of this final LWA rule, the Commission has completed action on PRM–50–82.

IV. Section-by-Section Analysis

Part 2—Rules of Practice for Domestic Licensing Proceedings and Issuance of Orders

Section 2.101, Filing of Application

Section 2.101 is revised by adding a new paragraph (a)(9), which provides that an applicant for a construction permit or combined license may submit a request for an LWA either as part of a complete application under paragraphs (a)(1) through (4), or in two parts under this paragraph (*i.e.*, a ''phased LWA application''). If the LWA application is submitted as part of a complete construction permit or combined license application, the application must include the information required by § 50.10(d)(3).

If the application is a phased LWA application, the first part must contain the information required by § 50.10(d)(3) on the LWA, as well as the general information required of all production and utilization facility applicants under § 50.33(a) through (f). The second part of the application must

contain the remaining information otherwise required to be filed in a complete application under § 2.101(a)(1) thorough (4). However, the applicant would have the further option of submitting part two in additional subparts in accordance with § 2.101(a–1). The second part (or the first subpart of multiple subparts under § 2.101(a–1)) must be filed no later than 18 months after the filing of part one. Part two of the application (or the first subpart of any additional subparts submitted in accordance with § 2.101(a–1)) must be submitted no later than 18 months after submission of part one of the application.

An applicant for an ESP may *not* submit its LWA application in advance of the underlying ESP application, and therefore is not permitted to use the procedures of subpart F of part 2, or submit its application in two parts under § 2.101(a)(9). Similarly, the holder of an ESP is not permitted to use the procedures of subpart F of part 2, nor to submit its ESP amendment application for LWA authority in two parts under § 2.101(a)(9).

Section 2.102, Administrative Review of Application

Paragraph (a) of § 2.102 is revised by adding an LWA to the list of docketed applications for which the NRC staff must establish a schedule for review of the application.

Section 2.104, Notice of Hearing

The introductory text of paragraph (a) is revised to add LWAs to the list of application types for which the Commission must issue a hearing notice. In addition, paragraph (c)(1) is revised to require the relevant NRC Staff Director to transmit a copy of the notice of hearing for an application for an LWA to state and local officials. In many cases, this is a formality, inasmuch as pre-application interactions between the NRC and the potential LWA applicant will result in informal contacts with those state and local officials.

Subpart F

The title of subpart F is revised to reflect the broader scope of matters covered under this section, as described under § 2.600.

Section 2.600, Scope of Subpart

The statement of scope in § 2.600 is revised to reflect the new set of procedures for phased LWA applications in proposed §§ 2.641 through 2.649. A new paragraph (d) is added to refer to §§ 2.641 through 2.649 as containing the applicable procedures for phased construction permit and combined license applications which also request LWA authority.

Section 2.606, Partial Decision on Site Suitability Issues

Paragraph (a) of § 2.606, which provides that an LWA may not be issued without completion of the ''full review'' required by NEPA, is revised to remove the reference to an LWA, because LWAs are now covered in §§ 2.641 through 2.649.

Section 2.641, Filing Fees

Section 2.641, which is comparable to current § 2.602, provides that a phased LWA application must be accompanied by the applicable filing fees in § 50.30(e) and part 170 of this chapter.

Section 2.643, Acceptance and Docketing of Application for Limited Work Authorization

Section 2.643, which is comparable to current § 2.603, describes the acceptance and docketing requirements for phased LWA applications, and the requirement for publication in the **Federal Register** of a notice of docketing. Paragraph (a) provides that each part of the application, when first received, will be treated as a tendered application and assessed for sufficiency. If the submitted part of the application is determined to be incomplete, the relevant Director will inform the applicant. The determination of completeness will generally be made in 30 days, barring unusual circumstances.

Under paragraph (b), the Director will docket part one of the application only if that part is ''complete.'' The NRC would use the existing guidelines and practices for determining the completeness of applications under this section, as are used in determining completeness under § 2.101. Upon docketing, the Director will assign a docket number that will be used throughout the entire proceeding (including that part of the proceeding on part two of the application).

Under paragraph (c), the Director will make the designated distributions to the Governor of the State in which the nuclear power plant will be located, and publish a notice of docketing in the **Federal Register**. Often in practice, the notice of hearing required by the AEA is included in the notice of docketing, but as with existing applications, this will remain a matter of discretion by the NRC, who will determine the most efficient course of action in this regard.

Paragraph (d) provides that part two of the application will be docketed, as with part one, when it is determined to be complete. The Commission reiterates that ''part two'' could be submitted in several subparts if the applicant chose to take advantage of the provisions of § 2.101(a–1), which provides for submission of applications in three parts.

Finally, under paragraph (e), the Director is required to publish a second notice of docketing in the **Federal Register** for part two of the application. As with the notice of docketing for part one, the notice of docketing for part two may also include a notice of hearing on the second part of the application.

The NRC notes that nothing in § 2.101(a)(9), or any part of subpart F of part 2, requires that the hearing on part one of the application be completed and an initial decision issued by the presiding officer, before part two of the application is filed.

Section 2.645, Notice of Hearing

Section 2.645, which is comparable to current § 2.604, sets forth the content of the notice of hearing for each of the two parts of the proceeding. Paragraph (a) provides that the notice of hearing for part one specify that the hearing will relate only to consideration of the matters related to § 50.33(a) through (f), and the LWA issues under review. Although not explicitly stated in this paragraph, interested persons who seek to intervene in the hearing on part one of the application must file a petition to intervene in accordance with the notice of hearing, and § 2.309.

Under paragraph (b), a supplementary notice of hearing will be published in the **Federal Register** when part two of the application is docketed. This provides a second opportunity for interested persons to file petitions to intervene with respect to the matters relevant to part two of the application. These petitions must be filed within the time specified in the notice of hearing, and must meet the applicable requirements of subpart C of part 2, including the contention requirements in § 2.309.

Paragraph (c) addresses continued participation in a phased application involving a request for advance consideration for an LWA. The provisions of paragraph (c) differ somewhat from the existing procedures in § 2.604 applicable to phased applications which do not involve LWAs, in that the Commission has decided not to allow a party admitted in part one of the proceeding, who did not withdraw or was not otherwise dismissed, to automatically continue as a party in phase two of the proceeding. Instead, each party who wishes to participate in the second phase must submit a second petition to intervene in accordance with § 2.309. The petition

need not, however, address the interest and standing requirements in § 2.309(d). The petition must be filed within the time provided by the supplementary notice of hearing published in the **Federal Register** for part two of the application.

Paragraph (d) makes clear that a non-timely petition for intervention filed under paragraph (b) (incorrectly referred to as paragraph (c) in the supplemental proposed rule) must meet the factors in both 2.309(c)(1)(i) through (iv), as well as 2.309(d). This is no different than non-timely petitions for intervention filed in ordinary, non-phased proceedings.

As noted in the *Section-by-Section Analysis* in this document for § 2.643, nothing in § 2.101(a)(9) or subpart F of part 2 requires that the hearing on part one of the application be completed and an initial decision issued by the presiding officer, before part two of the application is filed. Thus, there may be simultaneous hearings on parts one and two of the application. However, as reflected in paragraph (e), the Commission's intent is that the membership of the Atomic Safety and Licensing Board designated for hearings under part one be the same as for the hearings under part two, to the extent practical and consistent with timely completion of each hearing.

Section 2.647 [Reserved]

This section is reserved for future use by the Commission.

Section 2.649, Partial Decisions on Limited Work Authorization

Section 2.649, which is comparable to § 2.606, denotes the provisions in subparts C and G to part 2 relative to issues such as oral arguments, immediate effectiveness of the presiding officer's initial decision, and petitions for Commission review, that apply to partial initial decisions on an LWA rendered in accordance with this subpart. This section also states that the LWA may not be issued without completion of the environmental review required for LWAs under subpart A of part 51. Finally, this section provides that the time for the Commission to exercise its review and *sua sponte* authority is the same time provided for in part 2 with respect to a final decision on issuance of a construction permit or combined license.

Part 50—Domestic Licensing of Production and Utilization Facilities

50.10, License Required; Limited Work Authorization

Paragraph (a), which is derived from former § 50.10(b), sets forth a new definition of ''construction'' for purposes of this section (the same definition is also used in part 51, *see* 10 CFR 51.4). The definition of construction has been substantially modified from the definition in former § 50.10(b) in both structure and content, and supersedes the definition of construction in former § 50.10(c). The new definition is divided into two parts, with the first specifying the activities deemed to constitute ''construction,'' and the second part specifying activities which are excluded from the definition.

Under the new definition, excavation is excluded from construction. Excavation includes the removal of any soil, rock, gravel, or other material below the final ground elevation to the final parent material. Thus, all these excavation activities may be conducted without an LWA, construction permit, or combined license. However, the placement of permanent, non-structural dewatering materials, mudmats and/or engineered backfill which are placed in advance of the placement of the foundation and associated permanent retaining walls for SSCs within the scope of the definition of construction are not excavation activities, but instead fall within the scope of construction. Any person or entity that conducts excavation, however, should be aware that the NRC expects any subsequent LWA, construction permit, or combined license application to accurately document and address the conditions exposed by excavation, to ensure that the NRC will have an adequate basis for evaluating the relevant portions of the LWA, construction permit, or combined license application.

Whereas former § 50.10(b) allowed the driving of piles for the facility without NRC approval, the LWA final rule does not permit driving of piles for SSCs described in the definition of construction, unless NRC permission is obtained in the form of an LWA, construction permit, or combined license. The ''driving of piles'' not related to ensuring the structural stability or integrity of any SSC within the scope of the definition of construction does not fall within the definition of construction in this paragraph, and therefore may be accomplished without an LWA, construction permit, or combined license. For example, piles driven to support the erection of a bridge for a temporary or permanent access road would not be considered ''construction'' under this section and may be performed without an LWA, construction permit, or combined license.

The SSCs which are within the scope of the definition of construction, and which have a reasonable nexus to radiological health and safety or common defense and security are set forth in paragraph (a)(1). This definition was derived from the scope of SSCs that are included in the program for monitoring the effectiveness of maintenance at nuclear power plants under 10 CFR 50.65, and supplemented with SSCs that are needed for fire protection, security, and onsite emergency facilities. There may be some SSCs of a facility which do not have a reasonable nexus to radiological health and safety or common defense and security. The determination of the SSCs that do not have a reasonable nexus to radiological health and safety or common defense and security will be dependent upon the design of the facility. An example SSC that would not be within the scope of construction is a cooling tower that is used to cool the turbine condenser. However, a cooling system that is used for both safety and non-safety functions would fall within the definition of construction.

Construction, as defined in this paragraph includes installation of the foundation, including soil compaction; the installation of permanent drainage systems and geofabric; the placement of backfill, concrete (*e.g.*, ''mudmats'') or other materials which will not be removed before placement of the foundation of a structure; the placement and compaction of a subbase; the installation of reinforcing bars to be incorporated into the foundation of the structure; the erection of concrete forms for the foundations that will remain in-place permanently (even if non-structural); and placement of concrete or other material constituting the foundation of any SSC within scope of the definition of construction. Foundation installation activities will require an LWA, construction permit, or combined license. The term ''permanent'' in this context, includes anything that will exist in its final, in-place plant location after fuel load. By contrast, the term, ''temporary,'' means anything that will be removed from the excavation before fuel load.

Construction also includes the ''onsite, in-place,'' fabrication, erection, integration, or testing activities for any in-scope SSC. The term, ''onsite, in place, fabrication, erection, integration or testing'' is intended to describe the historical process of constructing a nuclear power plant in its final, onsite plant location, where components or modules are integrated into the final, in-plant location. The definition is intended to exclude persons from

having to obtain an LWA, construction permit, or combined license, to fabricate, assemble, and test components and modules in a shop building, warehouse, or laydown area located onsite. However, the installation or integration of that SSC into its final plant location would require either a construction permit or combined license. The NRC notes that under § 50.10(a)(2)(ix), construction does not include manufacturing of a nuclear power reactor under subpart F of part 52, even if the manufacturing is accomplished onsite, so long as the manufacturing is not done in-place, at the final (permanent) plant location on the site.

Paragraph (b), which is derived from former § 50.10(a), prohibits any person within the United States from transferring or receiving in interstate commerce, manufacturing, producing, transferring, acquiring, possessing, or using any production or utilization facility except as authorized by a license issued by the Commission, or as provided in § 50.11.

Paragraph (c), which is substantially modified from the former § 50.10(b), prohibits any person from beginning the ''construction'' of a production or utilization facility on a site on which the facility is to be operated until that person has been issued a construction permit, a combined license under part 52, or an LWA under paragraph (d) of this section.

Paragraph (d), which is substantially modified from the former § 50.10(e), addresses the need for, nature and contents of an application for an LWA. Paragraph (d)(1) allows the Commission to issue an LWA in advance of a construction permit or combined license, authorizing the holder to perform certain delineated construction requirements.

Paragraph (d)(2) provides that an LWA application may be submitted as:

—Part of a complete application for a construction permit or combined license under § 2.101(a)(1) through (4).
—Part one of a phased application under § 2.101(a)(9).
—Part of a complete application for an ESP under § 2.101(a)(1) through (4).
—An amendment to an already issued ESP.

Paragraph (d)(3) establishes the requirements for the content of an LWA application. The application must include a safety analysis report, an environmental report, and a redress plan. The safety analysis report, which may be a stand-alone document or incorporated into the construction permit or combined license application's preliminary or FSAR, as applicable, must describe the LWA activities that the applicant seeks to perform, provide the final design for the structures to be constructed under the LWA and a safety analysis for those portions of the structure, and provide a safety analysis of the design demonstrating that the activities will be conducted in accordance with applicable Commission safety requirements.

The environmental report must meet the requirements of 10 CFR 51.49, which is discussed in more detail in the *Section-by-Section Analysis* in this document for that provision.

The redress plan must describe the activities that would be implemented by the LWA holder, should construction be terminated by the holder, the LWA is revoked by the NRC, or upon effectiveness of the Commission's final decision denying the associated operating license application or the underlying combined license application, as applicable. The primary purpose of the redress plan is to address the placement of piles and ensure removal of the foundation, which are the only activities which may be accomplished under an LWA. Redress of site impacts resulting from pre-LWA activities will not be required under the redress plan. In addition, while redress of LWA impacts may have the practical effect of mitigating some environmental impacts, the redress plan is not a substitute for a thorough evaluation of environmental impacts, or development of mitigation measures that may be necessary to provide relief from environmental impacts associated with the proposed LWA activities.

Paragraph (e) generally addresses the requirements associated with issuance of an LWA. Paragraph (e)(1) sets forth the requirements for the appropriate Director to issue an LWA under this section. The Director may issue an LWA only after making the appropriate findings on: (1) Necessary technical qualifications, and the matter of foreign ownership or control relevant to the information required by § 50.33(a) through (f), as mandated by Sections 103.d. and 182.a. of the AEA; (2) Making the necessary findings on public health and safety and common defense and security with respect to the activities to be carried out under the LWA; (3) NRC staff issuance of a final EIS on the LWA in accordance with the applicable requirements of part 51; and (4) The presiding officer finding on the environmental issues relevant to the LWA in accordance with the applicable requirements of part 51, and a finding on the safety issues relevant to the LWA.

Paragraph (e)(2) requires that the LWA specify the activities that the holder is authorized to perform, consistent with the LWA application and as modified based upon the NRC's review. In addition, each LWA will be issued with a condition requiring implementation of the redress plan if the LWA holder terminates construction, the LWA is revoked, or upon effectiveness of the Commission's final decision denying the associated operating license application or the underlying combined license application, as applicable. As discussed in the analysis of paragraph (e), this condition survives the merging of the LWA into the underlying construction permit, ESP, or combined license.

Paragraph (f), which is also derived from former § 50.10(e), addresses the legal effect of an issued LWA. Paragraph (f)(1) provides that any activities undertaken under an LWA shall be entirely at the risk of the applicant and, with exception of the matters determined under paragraph (d)(3)(ii) and (iii), the issuance of the LWA shall have no bearing on the issuance of a construction permit or combined license with respect to the requirements of the AEA, and rules, regulations, or orders issued under the AEA. Thus, this paragraph states that the EIS for a construction permit or combined license application for which an LWA was previously issued will not address, and the presiding officer will not consider, the sunk costs of the holder of the LWA in determining the proposed action (*i.e.*, issuance of the construction permit or combined license).

New paragraph (g) requires the LWA holder to begin implementation of the redress plan in a reasonable time, and complete the redress no later than 18 months after termination of construction by the holder, revocation of the LWA, or upon effectiveness of the Commission's final decision denying the associated operating license application, or the underlying construction permit or the combined license application, as applicable.

Part 51—Environmental Protection Regulations for Domestic Licensing and Related Regulatory Functions

Section 51.4, Definitions

Section 51.4 is revised by adding a new definition of ''construction.'' This makes applicable throughout part 51 the definition of construction in proposed § 50.10(a), and has the effect of excluding from an EIS for any ESP, construction permit, combined license,

or an LWA, any discussion, evaluation or consideration of the environmental impacts or benefits associated with non-construction activities as set forth in § 50.10(a). This also removes the need for the NRC decision maker, including a presiding officer, to make a NEPA finding with respect to the environmental impacts or benefits associated with those non-construction activities.

Section 51.17, Information Collection Requirements; OMB Approval

Paragraph (b) is revised by adding a reference to a new § 51.49, which requires submission of an environmental report by LWA applicants. While § 51.49 contains a new information collection requirement, this will not result in a net increase in the burden placed on LWA applicants because the information required under this new section was formerly required to be submitted by these applicants as part of a complete environmental report for the underlying ESP, construction permit or combined license under § 51.50. The primary effect of this final rule would be to allow delayed submission of most of the environmental information to the time that the underlying construction permit or combined license application and environmental report is submitted. Thus, the environmental report submitted under § 51.49 at the LWA stage would, in most cases, be limited in scope to address environmental impacts of LWA activities only.

Section 51.45, Environmental Report

Paragraph (c) is revised by adding a new requirement requiring environmental reports for ESP, construction permits, and combined licenses to include a description of impacts of the applicant's pre-construction activities at the proposed site (*i.e.*, the activities listed in paragraph (b)(1) through (8) in the definition of construction contained in § 51.4) that are necessary to support the construction and operation of the facility which is the subject of the LWA, construction permit, or combined license application, and an analysis of the cumulative impacts of the activities to be authorized by the LWA, construction permit, or combined license in light of the preconstruction impacts.

Section 51.49, Environmental Report-Limited Work Authorization

A new § 51.49 is added to part 51. This new section requires the applicant for an LWA to submit an environmental report containing certain specified information. Both paragraph (a), which applies to an applicant requesting an LWA as part of a complete application, and paragraph (b), which applies to an applicant submitting its application in two parts under § 2.101(a)(9), requires the applicant to submit an environmental report which describes: (1) The activities proposed to be conducted under the LWA; (2) The need to conduct those LWA activities in advance of the main action; (3) A description of the environmental impacts that may reasonably be expected to result from the conduct of the requested LWA activities; (4) The mitigation measures to be implemented to achieve the level of environmental impacts described; and (5) A discussion of the reasons for rejecting other mitigation measures that could be used to further reduce environmental impacts. Regardless of whether an LWA applicant submits an application in two parts, or seeks early consideration and decision on site suitability and environmental siting matters, the environmental report for the LWA should address any impacts attributable to activities for which NRC approval is not required (*i.e.*, the activities excluded from the definition of construction in § 50.12(a)).

Paragraph (c) describes the contents of the environmental report when the request for the LWA is submitted as part of an ESP application. There is no opportunity for an ESP holder to submit its application in two parts, with the LWA information submitted in advance of the main ESP application.

Paragraph (d) describes the contents of the environmental report when the LWA request is submitted by an ESP holder. In this situation, the environmental report need only contain information on the LWA activities and their environmental impact, and would not include the general information required by § 51.50(b).

Paragraph (e) establishes a limited exception from the information required by paragraphs (a) and (b) to be submitted in an environmental report. For those situations where the LWA is to be conducted at a site for which the Commission previously prepared an EIS for the construction and operation of a nuclear power plant, the construction permit was issued, but the construction of the plant was never completed, then the applicant's environmental report may incorporate by reference the earlier EIS. However, in the event of incorporation by reference, the environmental report must identify whether there is new and significant information relative to the matters required to be addressed in the environmental report with respect to the environmental impacts of the requested LWA activities, as specified in paragraphs (a) or (b). In addition, analogous to the requirement in § 51.50(c)(1)(iv) of the 2007 final part 52 rule, the environmental report must include a description of the process for identifying new and significant information. The applicant should have a reasonable process for identifying new and significant information that may have a bearing on the earlier NRC conclusion, and should document the results of this process in an auditable form. Documentation related to the applicant's search for new information and its determination about the significance of that new information should be maintained in an auditable form by the applicant. The NRC staff will verify that the applicant's process for identifying new and significant information is effective.

Paragraph (f) requires, for any application containing an LWA request, that the environmental report must separately evaluate the environmental impacts and proposed alternatives to the activities proposed to be conducted under the LWA. However, at the option of the applicant, the environmental report may also include the information required by § 51.50 to be submitted in the environmental report for the construction permit or combined license application. In those situations, the ''integrated'' environmental report would separately address the total impacts of constructing (including the LWA activities) and operating the proposed facility. This will allow the NRC to prepare in parallel the EIS for the LWA activities and a supplemental EIS for the underlying construction permit or operating license, or a complete EIS at the LWA stage.

Section 51.71, Draft Environmental Impact Statement—Contents

Section 51.71 is revised by redesignating the current paragraph (e) as paragraph (f), and a new paragraph (e) is added to re-emphasize that the draft EIS for the underlying construction permit or combined license will not address or consider the sunk costs associated with the LWA. Paragraph (e) is consistent with § 50.10(f) and new § 51.103(a)(6).

Section 51.76, Draft Environmental Impact Statement—Limited Work Authorization

Section 51.76 is a new section governing the NRC's preparation of a draft EIS to support a decision on an LWA. The internal organization of § 51.76 parallels that of § 51.49.

Paragraph (a) addresses the EIS to be prepared in connection with a complete application for a construction permit or combined license. This section allows the NRC to prepare at the time of the LWA application either an EIS limited to LWA activities (to be followed by a supplemental EIS on the underlying construction permit or combined license), or a single, complete EIS for the construction permit or combined license. The NRC notes that this paragraph addresses the situation where the application for the construction permit or combined license is complete and includes the request and necessary information for an LWA. Paragraph (b), by contrast, addresses the situation where the LWA request is submitted in advance of the complete application for the construction permit or combined license.

Paragraph (b) applies to an EIS prepared in support of a phased LWA under § 2.101(a)(9). In this situation, if the environmental report submitted in part one is limited to the LWA activities, then the NRC will prepare an EIS limited to the LWA activities. Once part two of the application is received, which includes the environmental report required by § 51.50, the NRC will prepare a supplemental EIS for the construction permit or combined license in accordance with § 51.71, and § 51.75(a) or (c), as applicable. By contrast, if the environmental report submitted in part one is a complete environmental report required by § 51.50, then the NRC will prepare at the LWA phase a single, complete EIS for the construction permit or combined license in accordance with § 51.71, and § 51.75(a) or (c), as applicable.

Paragraph (c) applies to an EIS prepared for issuance of an ESP which will also include an LWA. The EIS will address the scope of matters required to be addressed under § 51.75(d), which depends upon the matters which the applicant chooses to address in its environmental report, as well as the environmental impacts of conducting the LWA activities requested.

Paragraph (d) addresses the situation where an ESP holder (as opposed to an applicant) requests an LWA. In this situation, siting and many of the environmental issues have been addressed and resolved in the EIS supporting issuance of the ESP. This paragraph provides for the NRC to prepare a supplemental EIS, addressing the impacts of conducting LWA activities (including any new and significant information that would change the NRC's prior conclusion with respect to those construction activities which would actually be conducted earlier under the LWA instead of referencing a construction permit or combined license), and the adequacy of the proposed redress plan. Other than this updating, the supplemental EIS will not present any updated information on the matters resolved in the ESP EIS.

Paragraph (e) addresses the nature of the EIS prepared for an LWA requested for a site that was approved by the NRC and a construction permit issued, but construction of the nuclear power plant was not completed. In these cases, the EIS will incorporate by reference the earlier EIS, address whether there is any significant new information with respect to the environmental impacts of construction relevant to the scope of activities to be performed under the LWA, and evaluate this type of information in accordance with § 51.71 in determining if the LWA should be issued, or issued with appropriate conditions.

Paragraph (f) indicates that in all cases, the EIS must separately address the impacts of and proposed alternatives to the activities to be conducted under the LWA, to ensure that there are specific environmental findings addressing LWA activities for purposes of transparency of the final NRC NEPA findings and decision on the LWA request. However, this paragraph also makes clear that if the applicant's environmental report contains the comprehensive information necessary to address construction and operation impacts for the proposed facility, as is allowed under 10 CFR 2.101, then the EIS must similarly address those impacts, including the costs and benefits of the underlying proposed action.

Section 51.103, Record of Decision—General

Section 51.103 is revised by adding a new paragraph (a)(6), which specifies that in a construction permit or combined license proceeding where an LWA was previously issued, the Commission's decision on the construction permit or combined license application will not address or consider the sunk costs associated with the LWA. This provision, which is consistent with §§ 50.10(f) and 51.71(e), is intended to ensure that the Commission's decision whether to issue the construction permit or combined license is not biased in favor of issuance in evaluating the environmental impacts and benefits of the construction permit or combined license, and thereby avoid NEPA segmentation claims.

Section 51.104, NRC Proceeding Using Public Hearings; Consideration of Environmental Impact Statement

Section 51.104 is revised by adding a new paragraph (c) specifying that in an LWA proceeding, a party may only take a position and offer evidence on the aspects of the proposed action within the scope of NEPA and this subpart which are within the scope of that party's admitted contention. This paragraph also specifies that, in the LWA phase of the proceeding, the presiding officer will decide the matters in controversy among the parties, *viz.,* the contentions related to the adequacy of the EIS prepared for the LWA. The scope of the EIS will, in turn, depend upon whether the LWA applicant chooses to submit an environmental report limited to LWA impacts, or whether the LWA applicant chooses to submit a more comprehensive environmental report as permitted under 10 CFR 2.101 *and* seeks an early decision on siting matters under subpart F of 10 CFR part 2.

Section 51.105, Public Hearings In Proceedings for Issuance of Construction Permits or Early Site Permits; Limited Work Authorizations

The title of this section is revised to add a reference to LWAs, reflecting the expanded scope of matters addressed in this section. Second, a new paragraph (c) is added to specify the determinations which must be made by the presiding officer in an LWA hearing associated with either a construction permit or early site permit. Under this new paragraph, the presiding officer would:

—Determine whether the requirements of Section 102(2)(A), (C), and (E) of NEPA have been met with respect to the activities to be conducted under the LWA.

—Independently consider the balance among conflicting factors with respect to the LWA.

—Determine whether the applicant's proposed redress plan is reasonably expected, from a technical standpoint, to redress activities conducted under the LWA, should LWA activities be terminated by the holder or the LWA be revoked by the NRC, or upon effectiveness of the Commission's final decision denying the associated construction permit or combined license application, as applicable.

—In an uncontested proceeding, determine whether the NRC's NEPA review has been adequate.

—In a contested proceeding, determine whether the LWA should be issued in

accordance with the regulations in part 51.

Section 51.107, Public hearings in proceedings for issuance of combined licenses; limited work authorizations

Section 51.107 is revised in two respects. The title of this section is revised to add a reference to LWAs, reflecting the expanded scope of matters addressed in this section. Finally, a new paragraph (d) is also added to specify the determinations which must be made by the presiding officer in an LWA hearing associated with a combined license. This paragraph is essentially the same as § 51.105(c).

Part 52—Licenses, Certifications, and Approvals for Nuclear Power Plants

Section 52.1, Definitions

A new definition of LWA is added which would be defined as the authorization provided under § 50.10(d). The NRC notes that an applicant of an ESP who requests authority to perform the activities permitted by § 50.10(d), would not, if the request were granted, receive an LWA separate from its ESP. Instead, the ESP itself would authorize the activities permitted by § 50.10(d). This regulatory approach is consistent with the current language of §§ 52.17(c) and 52.25(b). However once an ESP is issued, the holder could apply for permission to conduct LWA activities under § 52.27 in the form of an amendment to the ESP.

Section 52.17, Contents of Applications; Technical Information

Paragraph (c) of § 52.17 is revised by removing the proposed language with respect to LWAs, and specifying that if the applicant wishes to obtain an LWA, then the information required by § 50.10(d)(3) must be included in the site safety analysis report. This paragraph also makes clear that for early site applications which were submitted before the effective date of the final LWA rule, the new requirements in § 52.17(c) do not apply and their applications need only meet the requirements in former § 52.17(c).

Section 52.24, Issuance of Early Site Permit

Paragraph (c) is revised to state that an ESP must specify the activities under § 50.10 that the permit holder is authorized to perform.

Section 52.27, Limited Work Authorization After Issuance of Early Site Permit

Section 52.27 is redesignated as § 52.26, and a new § 52.27 is added. The new § 52.27 allows an ESP holder to request an LWA in accordance with § 50.10—a matter which was not clear under the former provisions of part 52.

Section 52.80, Content of Applications; Additional Technical Information

Paragraph (b) is revised to state that a combined license application that does not request an LWA must include an environmental report prepared in accordance with § 51.50(c), and that a combined license application that does request an LWA must include an environmental report prepared in accordance with §§ 51.49 and 51.50(c).

Paragraph (c) is revised to require that a combined license application containing a request for an LWA must contain the information otherwise required by 10 CFR 50.10.

Section 52.91, Authorization To Conduct Limited Work Authorization Activities

The heading for § 52.91 is revised. Section 52.91 is revised to reflect the elimination of ''LWA–1'' and ''LWA–2'' in former § 50.10(e). Under paragraph (a) of § 52.91, an applicant for a combined license may undertake LWA activities only if it: (1) References an ESP which includes LWA authority; or (2) the combined license applicant applies for and is granted LWA authority under § 50.10. Paragraph (b) requires the combined license applicant who begins construction under an LWA, to implement the LWA redress plan if the underlying combined license application is withdrawn by the applicant or denied by the NRC.

Section 52.99, Inspection During Construction

Paragraph (a) is revised to replace the reference to 10 CFR 50.10(b) with a reference to 10 CFR 50.10(a).

Part 100—Reactor Site Criteria

Section 100.23, Geologic and Seismic Siting Criteria

Paragraph (b) is revised to reflect the revisions in 10 CFR 50.10 that redefine what is considered ''construction.'' This paragraph formerly stated that the investigations required in 10 CFR 100.23(c) are within the scope of investigations permitted by former 10 CFR 50.10(c)(1). This sentence has been revised to state that the investigations required in 10 CFR 100.23(c) are not considered ''construction'' as defined in 10 CFR 50.10(a).

V. Availability of Documents

The NRC is making the documents identified below available to interested persons through one or more of the following methods as indicated.

Public Document Room (PDR). The NRC PDR is located at 11555 Rockville Pike, Rockville, Maryland. *http://www.nrc.gov/reading-rm/contact-pdr.html.*

The NRC staff contact. Geary Mizuno, Mail Stop O–15D21, Washington, DC 20555–0001; telephone number 301–415–1639.

Document	PDR	Web	ADAMS No.	NRC staff
2006/05/25—Comment (4) submitted by Nuclear Energy Institute, Adrian P. Heymer on Proposed Rules.	X	X	ML061510471	.....
SECY–98–282, Part 52 Rulemaking Plan	.....	.....	ML032801416	.....
Staff Requirements—SECY–98–282—Part 52 Rulemaking Plan	.....	.....	ML032801439	.....
Draft Regulatory Analysis	X	X	ML062750434	X
Final Regulatory Analysis	X	X	ML071870012	X
Regulatory History Index for October 17, 2006 Supplemental Proposed Rule	.....	X	ML070240575	X

VI. Agreement State Compatibility

Under the ''Policy Statement on Adequacy and Compatibility of Agreement States Programs,'' approved by the Commission on June 20, 1997, and published in the **Federal Register** (62 FR 46517; September 3, 1997), this rule is classified as compatibility ''NRC'' regulations. The NRC program elements in this category are those that relate directly to areas of regulation reserved to the NRC by the AEA or provisions of Title 10 of the Code of Federal Regulations, and although an Agreement State may not adopt program elements reserved to NRC, it may wish to inform its licensees of certain requirements via a mechanism that is consistent with the particular State's administrative

procedure laws, but does not confer regulatory authority on the State.

VII. Voluntary Consensus Standards

The National Technology Transfer and Advancement Act of 1995, Pub. L. 104–113, requires that Federal agencies use technical standards that are developed or adopted by voluntary consensus standards bodies unless using such a standard is inconsistent with applicable law or is otherwise impractical. In this rule, the NRC is: (1) Redefining the scope of activities constituting ''construction'' for which NRC approval is required; (2) redefining the scope of activities constituting construction which the NRC may approve in an LWA granted in advance of the issuance of a construction permit or combined license, or which may be conducted by a holder of an ESP; and (3) revising the NRC's procedures for granting LWAs. This rulemaking does not establish standards or substantive requirements with which all applicants and licensees must comply. For these reasons, the Commission concludes that this action does not constitute the establishment that contains generally applicable standards.

VIII. Environmental Impact—Categorical Exclusion

The NRC has determined that the changes made in this rule fall within the types of actions described in categorical exclusions described in 10 CFR 51.22(c)(1) and (c)(3). Specifically, the conforming changes made to 10 CFR part 2 qualify for the categorical exclusion described in § 51.22(c)(1). The changes to parts 50, 51, and 52 that describe procedures for filing and reviewing applications for LWAs qualify for the categorical exclusion described in § 51.22(c)(3)(i). All other changes qualify for the categorical exclusion described in § 51.22(c)(3)(iv).[13] Therefore, neither an EIS nor an EA has been prepared for this rule.

[13] Although the industry's request came in the form of a comment on the proposed part 52 rule (71 FR 12782; March 13, 2006), the comment letter stated; ''To the extent the NRC determines that these LWA issues cannot be addressed in the current rulemaking, we ask that the Commission initiate an expedited rulemaking.'' The NRC has determined that the changes suggested by the industry in Comment 4 (docketed on May 30, 2006) could not be incorporated into the final part 52 rule without re-noticing. Therefore, the Commission has decided to treat the comments submitted by the industry as a petition for expedited rulemaking and published a supplemental proposed rule for public comment. The NRC determined that Comment 4 meets the sufficiency requirements described in 10 CFR 2.802(c), and that it was appropriate to seek public comment on the petition by publishing the supplemental proposed rule developed in response to the petition, as allowed under 10 CFR 2.802(e).

IX. Paperwork Reduction Act Statement

This final rule amends information collection requirements contained in (10 CFR parts 50, 51, and 52 that are subject to the Paperwork Reduction Act of 1995 (44 U.S.C. 3501 et seq.). These requirements were approved by the Office of Management and Budget, approval numbers 3150–0011, 3150–0021, and 3150–0151 and the changes contain new or amended information collection requirements. Existing requirements were approved by the Office of Management and Budget, approval number(s) 3150–0011, 3150–0021, and 3150–0151.

The net burden to the public for the information collections in 10 CFR parts 50, 51, and 52 is estimated to average zero hours per response, as burden is being shifted from part 52 to part 50, and within sections of part 51. The burden to the public for the information collections in 10 CFR part 50 is estimated to average 1,900 hours per response and the burden for the information collections in 10 CFR part 52 is estimated to average a reduction of 1,900 hours per response, resulting in no change in burden. The burden to the public for the information collections in 10 CFR part 51 is estimated to result in no change in burden, as information collection requirements are shifted from one section to another. This includes the time for reviewing instructions, searching existing data sources, gathering and maintaining the data needed, and completing and reviewing the information collection. Send comments on any aspect of these information collections, including suggestions for reducing the burden, to the Records and FOIA/Privacy Services Branch (T–5 F52), U.S. Nuclear Regulatory Commission, Washington, DC 20555–0001, or by Internet electronic mail to *INFOCOLLECTS@NRC.GOV;* and to the Desk Officer, Office of Information and Regulatory Affairs, NEOB–10202, (3150–0011, 3150–0021, 3150–0151; 10 CFR parts 50, 51, and 52), Office of Management and Budget, Washington, DC 20503.

Public Protection Notification

The NRC may not conduct or sponsor, and a person is not required to respond to, a request for information or an information collection requirement unless the requesting document displays a currently valid OMB control number.

X. Regulatory Analysis

The NRC has prepared a regulatory analysis for this rule. The analysis examines the costs and benefits of the alternatives considered by the Commission. Availability of the regulatory analysis is provided in Section V of this document.

XI. Regulatory Flexibility Act Certification

In accordance with the Regulatory Flexibility Act (5 U.S.C. 605(b)), the Commission certifies that this rule will not have a significant economic impact on a substantial number of small entities. This rule affects only the licensing of nuclear power plants. The companies that will apply for an approval, certification, permit, site report, or license in accordance with the regulations in this rule do not fall within the scope of the definition of ''small entities'' set forth in the Regulatory Flexibility Act or the size standards established by the NRC (10 CFR 2.810).

XII. Backfit Analysis

The NRC has determined that the backfit rule does not require the NRC to prepare a backfit analysis for this rulemaking, because the rulemaking does not contain any provisions that would impose backfitting as defined in the backfit rule, 10 CFR 50.109.

There are no current holders of construction permits or combined licenses for nuclear power plants that would be protected by the backfitting restrictions in § 50.109. To the extent that the rulemaking revises the LWA requirements for future ESPs, construction permits, or combined licenses for nuclear power plants, these revisions do not constitute backfits because they are prospective in nature and the backfit rule was not intended to apply to every NRC action which substantially changes the expectations of future applicants. With respect to the ESPs issued by the NRC prior to adoption of the final LWA rule, the rule does not represent backfitting for several reasons. The ESPs issued prior to the effective date of the final rule were granted authority to conduct activities identified in former § 50.10(e)(1), commonly referred to as an LWA–1 activities. Under the final rule, NRC review and approval is not required before applicants can commence these activities. In practical effect, the final rule moots the LWA authority granted in the applicable ESPs. Therefore, the final LWA rule has no applicability to these ESP holders with respect to their already-complete ESP application

process. Finally, the ESP holders are free to seek additional authority under their ESP in accordance with the final LWA rules provisions; in this respect, the current LWA holders are treated no differently than future ESP holders who do not seek LWA authority in their initial ESP application. For these reasons, the NRC concludes that the final LWA rule does not constitute backfitting.

XIII. Congressional Review Act

Under the Congressional Review Act of 1996, the NRC has determined that this action is not a major rule and has verified this determination with the Office of Information and Regulatory Affairs of OMB.

List of Subjects

10 CFR Part 2

Administrative practice and procedure, Byproduct material, Classified information, Environmental protection, Nuclear materials, Nuclear power plants and reactors, Penalties, Sex discrimination, Source material, Special nuclear material, Waste treatment and disposal.

10 CFR Part 50

Antitrust, Classified information, Criminal penalties, Fire protection, Intergovernmental relations, Nuclear power plants and reactors, Radiation protection, Reactor siting criteria, Reporting and recordkeeping requirements.

10 CFR Part 51

Administrative practice and procedure, Environmental Impact Statement, Nuclear materials, Nuclear power plants and reactors, Reporting and recordkeeping requirements.

10 CFR Part 52

Administrative practice and procedure, Antitrust, Backfitting, Combined license, Early site permit, Emergency planning, Fees, Inspection, Limited work authorization, Nuclear power plants and reactors, Probabilistic risk assessment, Prototype, Reactor siting criteria, Redress of site, Reporting and recordkeeping requirements, Standard design, Standard design certification.

10 CFR Part 100

Nuclear power plants and reactors, Reactor siting criteria.

■ For the reasons set forth in the preamble and under the authority of the Atomic Energy Act of 1954, as amended, the Energy Reorganization Act of 1974, as amended, and 5 U.S.C. 552 and 553, the NRC is adopting the following amendments to 10 CFR parts 2, 50, 51, 52 and 100.

PART 2—RULES OF PRACTICE FOR DOMESTIC LICENSING PROCEEDINGS AND ISSUANCE OF ORDERS

■ 1. The authority citation for part 2 continues to read as follows:

Authority: Secs. 161, 181, 68 Stat. 948, 953, as amended (42 U.S.C. 2201, 2231); sec. 191, as amended, Pub. L. 87–615, 76 Stat. 409 (42 U.S.C. 2241); sec. 201, 88 Stat. 1242, as amended (42 U.S.C. 5841); 5 U.S.C. 552; sec. 1704, 112 Stat. 2750 (44 U.S.C. 3504 note).

Section 2.101 also issued under secs. 53, 62, 63, 81, 103, 104, 105, 68 Stat. 930, 932, 933, 935, 936, 937, 938, as amended (42 U.S.C. 2073, 2092, 2093, 2111, 2133, 2134, 2135); sec. 114(f), Pub. L. 97–425, 96 Stat. 2213, as amended (42 U.S.C. 10143(f)), sec. 102, Pub. L. 91–190, 83 Stat. 853, as amended (42 U.S.C. 4332); sec. 301, 88 Stat. 1248 (42 U.S.C. 5871).

Sections 2.102, 2.103, 2.104, 2.105, 2.721 also issued under secs. 102, 103, 104, 105, 183i, 189, 68 Stat. 936, 937, 938, 954, 955, as amended (42 U.S.C. 2132, 2133, 2134, 2135, 2233, 2239). Sections 2.105 also issued under Pub. L. 97–415, 96 Stat. 2073 (42 U.S.C. 2239).

Sections 2.200–2.206 also issued under secs. 161b, i, o, 182, 186, 234, 68 Stat. 948–951, 955, 83 Stat. 444, as amended (42 U.S.C. 2201(b), (i), (o), 2236, 2282); sec. 206, 88 Stat 1246 (42 U.S.C. 5846). Section 2.205(j) also issued under Pub. L. 101–410, 104 Stat. 90, as amended by section 3100(s), Pub. L. 104–134, 110 Stat. 1321–373 (28 U.S.C. 2461 note). Sections 2.600–2.606 also issued under sec. 102, Pub. L. 91–190, 83 Stat. 853, as amended (42 U.S.C. 4332). Sections 2.700a, 2.719 also issued under 5 U.S.C. 554. Sections 2.754, 2.760, 2.770, 2.780 also issued under 5 U.S.C. 557. Section 2.764 also issued under secs. 135, 141, Pub. L. 97–425, 96 Stat. 2232, 2241 (42 U.S.C. 10155, 10161). Section 2.390 also issued under sec. 103, 68 Stat. 936, as amended (42 U.S.C. 2133), and 5 U.S.C. 552. Sections 2.800 and 2.808 also issued under 5 U.S.C. 553. Section 2.809 also issued under 5 U.S.C. 553, and sec. 29, Pub. L. 85–256, 71 Stat. 579, as amended (42 U.S.C. 2039). Subpart K also issued under sec. 189, 68 Stat. 955 (42 U.S.C. 2239); sec. 134, Pub. L. 97–425, 96 Stat. 2230 (42 U.S.C. 10154).

Subpart L also issued under sec. 189, 68 Stat. 955 (42 U.S.C. 2239). Subpart M also issued under sec. 184 (42 U.S.C. 2234) and sec. 189, 68 stat. 955 (42 U.S.C. 2239). Appendix A also issued under sec. 6, Pub. L. 91–550, 84 Stat. 1473 (42 U.S.C. 2135).

■ 2. In § 2.101, paragraphs (a)(1), (a)(2), (a)(3) introductory text, (a)(4), and (a)(5) are revised, paragraphs (a)(6) through (a)(8) are reserved, and paragraph (a)(9) is added to read as follows:

§ 2.101 Filing of application.

(a)(1) An application for a limited work authorization (LWA), a permit, a license, a license transfer, a license amendment, a license renewal, or a standard design approval, shall be filed with the Director of New Reactors, Director of Nuclear Reactor Regulation, or Director of Nuclear Material Safety and Safeguards, as prescribed by the applicable provisions of this chapter. A prospective applicant may confer informally with the NRC staff before filing an application.

(2) Each application for a license for a facility or for receipt of waste radioactive material from other persons for the purpose of commercial disposal by the waste disposal licensee will be assigned a docket number. However, to allow a determination as to whether an application for a limited work authorization, construction permit, operating license, early site permit, standard design approval, combined license, or manufacturing license for a production or utilization facility is complete and acceptable for docketing, it will be initially treated as a tendered application. A copy of the tendered application will be available for public inspection at the NRC Web site, *http://www.nrc.gov,* and/or at the NRC PDR. Generally, the determination on acceptability for docketing will be made within a period of 30 days. However, in selected applications, the Commission may decide to determine acceptability based on the technical adequacy of the application as well as its completeness. In these cases, the Commission, under § 2.104(a), will direct that the notice of hearing be issued as soon as practicable after the application has been tendered, and the determination of acceptability will be made generally within a period of 60 days. For docketing and other requirements for applications under part 61 of this chapter, see paragraph (g) of this section.

(3) If the Director of New Reactors, Director of Nuclear Reactor Regulation, or Director of Nuclear Material Safety and Safeguards, as appropriate, determines that a tendered application for a limited work authorization, construction permit, operating license, early site permit, standard design approval, combined license, or manufacturing license for a production or utilization facility, and/or any environmental report required under subpart A of part 51 of this chapter, or part thereof as provided in paragraphs (a)(5), (a)(9), or (a-1) of this section are complete and acceptable for docketing, a docket number will be assigned to the application or part thereof, and the applicant will be notified of the determination. With respect to the tendered application and/or environmental report or part thereof that

is acceptable for docketing, the applicant will be requested to:

* * * * *

(4) The tendered application for a limited work authorization, construction permit, operating license, early site permit, standard design approval, combined license, or manufacturing license for a production or utilization facility will be formally docketed upon receipt by the Director of New Reactors, Director of Nuclear Reactor Regulation, or Director of Nuclear Material Safety and Safeguards, as appropriate, of the required additional copies. Distribution of the additional copies shall be deemed to be complete as of the time the copies are deposited in the mail or with a carrier prepaid for delivery to the designated addresses. The date of docketing shall be the date when the required copies are received by the Director of New Reactors, Director of Nuclear Reactor Regulation or Director of Nuclear Material Safety and Safeguards, as appropriate. Within 10 days after docketing, the applicant shall submit to the Director of New Reactors, Director of Nuclear Reactor Regulation, or Director of Nuclear Material Safety and Safeguards, as appropriate, an affidavit that distribution of the additional copies to Federal, State, and local officials has been completed in accordance with the requirements of this chapter and written instructions furnished to the applicant by the Director of New Reactors, Director of Nuclear Reactor Regulation, or Director of Nuclear Material Safety and Safeguards, as appropriate. Amendments to the application and environmental report shall be filed and distributed, and an affidavit shall be furnished to the Director of New Reactors, Director of Nuclear Reactor Regulation, or Director of Nuclear Material Safety and Safeguards, as appropriate, in the same manner as for the initial application and environmental report. If it is determined that all or any part of the tendered application and/or environmental report is incomplete and therefore not acceptable for processing, the applicant will be informed of this determination, and the respects in which the document is deficient.

(5) An applicant for a construction permit under part 50 of this chapter or a combined license under part 52 of this chapter for a production or utilization facility which is subject to § 51.20(b) of this chapter, and is of the type specified in § 50.21(b)(2) or (3) or § 50.22 of this chapter or is a testing facility may submit the information required of applicants by part 50 or part 52 of this chapter in two parts. One part shall be accompanied by the information required by § 50.30(f) of this chapter, or § 52.80(b) of this chapter, as applicable. The other part shall include any information required by § 50.34(a) and, if applicable, § 50.34a of this chapter, or §§ 52.79 and 52.80(a), as applicable. One part may precede or follow other parts by no longer than 18 months. If it is determined that either of the parts as described previously is incomplete and not acceptable for processing, the Director of New Reactors, Director of Nuclear Reactor Regulation, or Director of Nuclear Material Safety and Safeguards, as appropriate, will inform the applicant of this determination and the respects in which the document is deficient. A determination of completeness will generally be made within a period of 30 days. Whichever part is filed first shall also include the fee required by §§ 50.30(e) and 170.21 of this chapter and the information required by §§ 50.33, 50.34(a)(1) or 52.79(a)(1), as applicable, and § 50.37 of this chapter. The Director of New Reactors, Director Nuclear Reactor Regulation, or Director of Nuclear Material Safety and Safeguards, as appropriate, will accept for docketing an application for a construction permit under part 50 of this chapter or a combined license under part 52 of this chapter for a production or utilization facility which is subject to § 51.20(b) of this chapter, and is of the type specified in § 50.21(b)(2) or (3) or § 50.22 of this chapter or is a testing facility where one part of the application as described previously is complete and conforms to the requirements of part 50 or part 52 of this chapter, as applicable. The additional part will be docketed upon a determination that it is complete, by the Director of New Reactors, Director of Nuclear Reactor Regulation, or Director of Nuclear Material Safety and Safeguards, as appropriate.

(6)–(8) [Reserved]

(9) An applicant for a construction permit for a utilization facility which is subject to § 51.20(b) of this chapter and is of the type specified in § 50.21(b)(2) or (b)(3) or § 50.22 of this chapter, an applicant for or holder of an early site permit under part 52 of this chapter, or an applicant for a combined license under part 52 of this chapter, who seeks to conduct the activities authorized under § 50.10(d) of this chapter may submit a complete application under paragraphs (a)(1) through (a)(4) of this section which includes the information required by § 50.10(d) of this chapter. Alternatively, the applicant (other than an applicant for or holder of an early site permit) may submit its application in two parts:

(i) Part one must include the information required by § 50.33(a) through (f) of this chapter, and the information required by § 50.10(d)(2) and (d)(3) of this chapter.

(ii) Part two must include the remaining information required by the Commission's regulations in this chapter which was not submitted in part one, *provided, however,* that this information may be submitted in accordance with the applicable provisions of paragraph (a)(5) of this section, or, for a construction permit applicant, paragraph (a)(1) of this section. Part two of the application must be submitted no later than 18 months after submission of part one.

* * * * *

■ 3. In § 2.102, paragraph (a) is revised to read as follows:

§ 2.102 Administrative review of application.

(a) During review of an application by the NRC staff, an applicant may be required to supply additional information. The staff may request any one party to the proceeding to confer with the NRC staff informally. In the case of docketed application for a limited work authorization, construction permit, operating license, early site permit, standard design approval, combined license, or manufacturing license under this chapter, the NRC staff shall establish a schedule for its review of the application, specifying the key intermediate steps from the time of docketing until the completion of its review.

* * * * *

■ 4. In § 2.104, paragraph (a) and paragraph (c)(1) are revised to read as follows:

§ 2.104 Notice of hearing.

(a) In the case of an application on which a hearing is required by the Act or this chapter, or in which the Commission finds that a hearing is required in the public interest, the Secretary will issue a notice of hearing to be published in the **Federal Register**. The notice must be published at least 15 days, and in the case of an application concerning a limited work authorization, construction permit, early site permit, or combined license for a facility of the type described in §§ 50.21(b) or 50.22 of this chapter or a testing facility, at least 30 days, before

the date set for hearing in the notice.[1] In addition, in the case of an application for a limited work authorization, construction permit, early site permit, or combined license for a facility of the type described in § 50.22 of this chapter, or a testing facility, the notice must be issued as soon as practicable after the NRC has docketed the application. If the Commission decides, under § 2.101(a)(2), to determine the acceptability of the application based on its technical adequacy as well as completeness, the notice must be issued as soon as practicable after the application has been tendered.

* * * * *

(c)(1) The Secretary will transmit a notice of hearing on an application for a license for a production or utilization facility, including a limited work authorization, early site permit, combined license, but not for a manufacturing license, for a license for receipt of waste radioactive material from other persons for the purpose of commercial disposal by the waste disposal licensee, for a license under part 61 of this chapter, for a construction authorization for a high-level waste repository at a geologic repository operations area under parts 60 or 63 of this chapter, for a license to receive and possess high-level radioactive waste at a geologic repository operations area under parts 60 or 63 of this chapter, and for a license under part 72 of this chapter to acquire, receive or possess spent fuel for the purpose of storage in an independent spent fuel storage installation (ISFSI) to the governor or other appropriate official of the State and to the chief executive of the municipality in which the facility is to be located or the activity is to be conducted or, if the facility is not to be located or the activity conducted within a municipality, to the chief executive of the county (or to the Tribal organization, if it is to be located or conducted within an Indian reservation).

* * * * *

■ 5. The heading of subpart F is revised to read as follows:

[1] If the notice of hearing concerning an application for a limited work authorization, construction permit, early site permit, or combined license for a facility of the type described in §§ 50.21(b) or 50.22 of this chapter or a testing facility does not specify the time and place of initial hearing, a subsequent notice will be published in the **Federal Register** which will provide at least 30 days notice of the time and place of that hearing. After this notice is given, the presiding officer may reschedule the commencement of the initial hearing for a later date or reconvene a recessed hearing without again providing at least 30 days notice.

Subpart F—Additional Procedures Applicable to Early Partial Decisions on Site Suitability Issues in Connection With an Application for a Construction Permit or Combined License To Construct Certain Utilization Facilities; and Advance Issuance of Limited Work Authorizations

■ 6. In § 2.600, the introductory text is revised, and a new paragraph (d) is added to read as follows:

§ 2.600 Scope of subpart.

This subpart prescribes procedures applicable to licensing proceedings which involve an early submittal of site suitability information in accordance with § 2.101(a–1), and a hearing and early partial decision on issues of site suitability, in connection with an application for a permit to construct a utilization facility which is subject to § 51.20(b) of this chapter and is of the type specified in § 50.21(b)(2) or (3) or § 50.22 of this chapter or is a testing facility. This subpart also prescribes procedures applicable to proceedings for a construction permit for a utilization facility which is subject to § 51.20(b) of this chapter and is of the type specified in § 50.21(b)(2) or (3) or § 50.22 of this chapter, or proceedings for a combined license under part 52 of this chapter, either of which includes a request to conduct the activities authorized under § 50.10(d) of part 50 of this chapter in advance of issuance of the construction permit or combined license, and submits an application in accordance with § 2.101(a)(9).

* * * * *

(d) The procedures in §§ 2.641 through 2.649 apply to phased applications for construction permits or combined licenses which request limited work authorizations to be issued in advance of issuance of the construction permit or combined license (*i.e.*, a phased application).

■ 7. In § 2.606, paragraph (a) is revised to read as follows:

§ 2.606 Partial decision on site suitability issues.

(a) The provisions of §§ 2.331, 2.339, 2.340(b), 2.343, 2.712, and 2.713 apply to any partial initial decision rendered in accordance with this subpart. Section 2.340(c) does not apply to any partial initial decision rendered in accordance with this subpart. No construction permit or combined license may be issued without completion of the full review required by Section 102(2) of the NEPA, as amended, and subpart A of part 51 of this chapter. The authority of the Commission to review such a partial initial decision *sua sponte,* or to raise *sua sponte* an issue that has not been raised by the parties, will be exercised within the same time as in the case of a full decision relating to the issuance of a construction permit or combined license.

* * * * *

■ 8. Following § 2.629, an undesignated center heading and §§ 2.641, 2.643, 2.645, and 2.649 are added and § 2.647 is reserved to read as follows:

Phased Applications Involving Limited Work Authorizations

Sec.
2.641 Filing fees.
2.643 Acceptance and docketing of application for limited work authorization.
2.645 Notice of hearing.
2.647 [Reserved]
2.649 Partial decisions on limited work authorization.

§ 2.641 Filing fees.

Each application which contains a request for limited work authorization under the procedures of § 2.101(a)(9) and this subpart shall be accompanied by any fee required by § 50.30(e) and part 170 of this chapter.

§ 2.643 Acceptance and docketing of application for limited work authorization.

(a) Each part of an application submitted in accordance with § 2.101(a)(9) will be initially treated as a tendered application. If it is determined that any one of the parts as described in § 2.101(a)(9) is incomplete and not acceptable for processing, the Director of New Reactors or the Director of Nuclear Reactor Regulation will inform the applicant of this determination and the respects in which the document is deficient. A determination of completeness will generally be made within a period of 30 days.

(b) The Director will accept for docketing part one of an application for a construction permit for a utilization facility which is subject to § 51.20(b) of this chapter and is of the type specified in § 50.21(b)(2) or (3) or § 50.22 of this chapter or an application for a combined license where part one of the application as described in § 2.101(a)(9) is complete. Part one will not be considered complete unless it contains the information required by § 50.10(d)(3) of this chapter. Upon assignment of a docket number, the procedures in § 2.101(a)(3) and (4) relating to formal docketing and the submission and distribution of additional copies of the application must be followed.

(c) If part one of the application is docketed, the Director will cause to be published in the **Federal Register** and send to the Governor or other appropriate official of the State in which the site is located, a notice of docketing of the application which states the purpose of the application, states the location of the proposed site, states that a notice of hearing will be published, and requests comments on the limited work authorization from Federal, State, and local agencies and interested persons. The notice will state that comments must be submitted to the NRC within 60 days or such other time as may be specified in the notice.

(d) Part two of the application will be docketed upon a determination by the Director that it is complete.

(e) If part two of the application is docketed, the Director will cause to be published in the **Federal Register** and sent to the Governor or other appropriate official of the State in which the site is located, a notice of docketing of part two of the application which states the purpose of the application, states that a notice of hearing will be published, and requests comments on the construction permit or combined license application, as applicable, from Federal, State, and local agencies and interested persons. The notice will state that comments must be submitted to the NRC within 60 days or such other time as may be specified in the notice.

§ 2.645 Notice of hearing.

(a) The notice of hearing on part one of the application must set forth the matters of fact and law to be considered, as required by § 2.104, which will be modified to state that the hearing will relate only to the matters related to § 50.33(a) through (f) of this chapter, and the limited work authorization.

(b) After docketing of part two of the application, as provided in §§ 2.101(a)(9) and 2.643(d), a supplementary notice of hearing will be published under § 2.104 with respect to the remaining unresolved issues in the proceeding within the scope of § 2.104. The supplementary notice of hearing will provide that any person whose interest may be affected by the proceeding and who desires to participate as a party in the resolution of the remaining issues shall, file a petition for leave to intervene within the time prescribed in the notice. The petition to intervene must meet the applicable requirements in subpart C of this part, including § 2.309. This supplementary notice will also provide appropriate opportunities for participation by a representative of an interested State under § 2.315(c) and for limited appearances under § 2.315(a).

(c) Any person who was permitted to intervene under the initial notice of hearing on the limited work authorization and who was not dismissed or did not withdraw as a party, may continue to participate as a party with respect to the remaining unresolved issues only if, within the time prescribed for filing of petitions for leave to intervene in the supplementary notice of hearing, that person files a petition for intervention which meets the applicable requirements in subpart C of this part, including § 2.309, *provided, however,* that the petition need not address § 2.309(d). However, a person who was granted discretionary intervention under § 2.309(e) must address in its petition the factors in § 2.309(e) as they apply to the supplementary hearing.

(d) A party who files a non-timely petition for intervention under paragraph (b) of this section to continue as a party may be dismissed from the proceeding, absent a determination that the party has made a substantial showing of good cause for failure to file on time, and with particular reference to the factors specified in §§ 2.309(c)(1)(i) through (iv) and 2.309(d). The notice will be ruled upon by the Commission or presiding officer designated to rule on petitions for leave to intervene.

(e) To the maximum extent practicable, the membership of the Atomic Safety and Licensing Board, or the individual presiding officer, as applicable, designated to preside in the proceeding on the remaining unresolved issues under the supplemental notice of hearing will be the same as the membership or individual designated to preside in the initial notice of hearing.

§ 2.647 [Reserved]

§ 2.649 Partial decisions on limited work authorization.

The provisions of §§ 2.331, 2.339, 2.340(b), 2.343, 2.712, and 2.713 apply to any partial initial decision rendered in accordance with this subpart. Section 2.340(c) does not apply to any partial initial decision rendered in accordance with this subpart. A limited work authorization may not be issued under 10 CFR 50.10(d) without completion of the review for limited work authorizations required by subpart A of part 51 of this chapter. The authority of the Commission to review such a partial initial decision *sua sponte,* or to raise *sua sponte* an issue that has not been raised by the parties, will be exercised within the same time as in the case of a full decision relating to the issuance of a construction permit or combined license.

PART 50—DOMESTIC LICENSING OF PRODUCTION AND UTILIZATION FACILITIES

■ 9. The authority citation for part 50 continues to read as follows:

Authority: Secs. 102, 103, 104, 105, 161, 182, 183, 186, 189, 68 Stat. 936, 937, 938, 948, 953, 954, 955, 956, as amended, sec. 234, 83 Stat. 444, as amended (42 U.S.C. 2132, 2133, 2134, 2135, 2201, 2232, 2233, 2236, 2239, 2282); secs. 201, as amended, 202, 206, 88 Stat. 1242, as amended, 1244, 1246 (42 U.S.C. 5841, 5842, 5846); sec. 1704, 112 Stat. 2750 (44 U.S.C. 3504 note). Section 50.7 also issued under Pub. L. 95–601, sec. 10, 92 Stat. 2951 (42 U.S.C. 5841). Section 50.10 also issued under secs. 101, 185, 68 Stat. 955, as amended (42 U.S.C. 2131, 2235); sec. 102, Pub. L. 91–190, 83 Stat. 853 (42 U.S.C. 4332). Sections 50.13, 50.54(dd), and 50.103 also issued under sec. 108, 68 Stat. 939, as amended (42 U.S.C. 2138).

Sections 50.23, 50.35, 50.55, and 50.56 also issued under sec. 185, 68 Stat. 955 (42 U.S.C. 2235). Sections 50.33a, 50.55a and Appendix Q also issued under sec. 102, Pub. L. 91–190, 83 Stat. 853 (42 U.S.C. 4332). Sections 50.34 and 50.54 also issued under sec. 204, 88 Stat. 1245 (42 U.S.C. 5844). Sections 50.58, 50.91, and 50.92 also issued under Pub. L. 97–415, 96 Stat. 2073 (42 U.S.C. 2239). Section 50.78 also issued under sec. 122, 68 Stat. 939 (42 U.S.C. 2152). Sections 50.80–50.81 also issued under sec. 184, 68 Stat. 954, as amended (42 U.S.C. 2234). Appendix F also issued under sec. 187, 68 Stat. 955 (42 U.S.C. 2237).

■ 10. Section 50.10 is revised to read as follows:

§ 50.10 License required; limited work authorization.

(a) *Definitions.* As used in this section, *construction* means the activities in paragraph (a)(1) of this section, and does not mean the activities in paragraph (a)(2) of this section.

(1) Activities constituting construction are the driving of piles, subsurface preparation, placement of backfill, concrete, or permanent retaining walls within an excavation, installation of foundations, or in-place assembly, erection, fabrication, or testing, which are for:

(i) Safety-related structures, systems, or components (SSCs) of a facility, as defined in 10 CFR 50.2;

(ii) SSCs relied upon to mitigate accidents or transients or used in plant emergency operating procedures;

(iii) SSCs whose failure could prevent safety-related SSCs from fulfilling their safety-related function;

(iv) SSCs whose failure could cause a reactor scram or actuation of a safety-related system;

(v) SSCs necessary to comply with 10 CFR part 73;

(vi) SSCs necessary to comply with 10 CFR 50.48 and criterion 3 of 10 CFR part 50, appendix A; and

(vii) Onsite emergency facilities, that is, technical support and operations support centers, necessary to comply with 10 CFR 50.47 and 10 CFR part 50, appendix E.

(2) Construction does not include:

(i) Changes for temporary use of the land for public recreational purposes;

(ii) Site exploration, including necessary borings to determine foundation conditions or other preconstruction monitoring to establish background information related to the suitability of the site, the environmental impacts of construction or operation, or the protection of environmental values;

(iii) Preparation of a site for construction of a facility, including clearing of the site, grading, installation of drainage, erosion and other environmental mitigation measures, and construction of temporary roads and borrow areas;

(iv) Erection of fences and other access control measures;

(v) Excavation;

(vi) Erection of support buildings (such as, construction equipment storage sheds, warehouse and shop facilities, utilities, concrete mixing plants, docking and unloading facilities, and office buildings) for use in connection with the construction of the facility;

(vii) Building of service facilities, such as paved roads, parking lots, railroad spurs, exterior utility and lighting systems, potable water systems, sanitary sewerage treatment facilities, and transmission lines;

(viii) Procurement or fabrication of components or portions of the proposed facility occurring at other than the final, in-place location at the facility;

(ix) Manufacture of a nuclear power reactor under a manufacturing license under subpart F of part 52 of this chapter to be installed at the proposed site and to be part of the proposed facility; or

(x) With respect to production or utilization facilities, other than testing facilities and nuclear power plants, required to be licensed under Section 104.a or Section 104.c of the Act, the erection of buildings which will be used for activities other than operation of a facility and which may also be used to house a facility (*e.g.*, the construction of a college laboratory building with space for installation of a training reactor).

(b) *Requirement for license.* Except as provided in § 50.11 of this chapter, no person within the United States shall transfer or receive in interstate commerce, manufacture, produce, transfer, acquire, possess, or use any production or utilization facility except as authorized by a license issued by the Commission.

(c) *Requirement for construction permit, early site permit authorizing limited work authorization activities, combined license, or limited work authorization.* No person may begin the construction of a production or utilization facility on a site on which the facility is to be operated until that person has been issued either a construction permit under this part, a combined license under part 52 of this chapter, an early site permit authorizing the activities under paragraph (d) of this section, or a limited work authorization under paragraph (d) of this section.

(d) *Request for limited work authorization.* (1) Any person to whom the Commission may otherwise issue either a license or permit under Sections 103, 104.b, or 185 of the Act for a facility of the type specified in §§ 50.21(b)(2), (b)(3), or 50.22 of this chapter, or a testing facility, may request a limited work authorization allowing that person to perform the driving of piles, subsurface preparation, placement of backfill, concrete, or permanent retaining walls within an excavation, installation of the foundation, including placement of concrete, any of which are for an SSC of the facility for which either a construction permit or combined license is otherwise required under paragraph (c) of this section.

(2) An application for a limited work authorization may be submitted as part of a complete application for a construction permit or combined license in accordance with 10 CFR 2.101(a)(1) through (a)(5), or as a partial application in accordance with 10 CFR 2.101(a)(9). An application for a limited work authorization must be submitted by an applicant for or holder of an early site permit as a complete application in accordance with 10 CFR 2.101(a)(1) through (a)(4).

(3) The application must include:

(i) A safety analysis report required by 10 CFR 50.34, 10 CFR 52.17 or 10 CFR 52.79 of this chapter, as applicable, a description of the activities requested to be performed, and the design and construction information otherwise required by the Commission's rules and regulations to be submitted for a construction permit or combined license, but limited to those portions of the facility that are within the scope of the limited work authorization. The safety analysis report must demonstrate that activities conducted under the limited work authorization will be conducted in compliance with the technically-relevant Commission requirements in 10 CFR Chapter I applicable to the design of those portions of the facility within the scope of the limited work authorization;

(ii) An environmental report in accordance with § 51.49 of this chapter; and

(iii) A plan for redress of activities performed under the limited work authorization, should limited work activities be terminated by the holder or the limited work authorization be revoked by the NRC, or upon effectiveness of the Commission's final decision denying the associated construction permit or combined license application, as applicable.

(e) *Issuance of limited work authorization.* (1) The Director of New Reactors or the Director of Nuclear Reactor Regulation may issue a limited work authorization only after:

(i) The NRC staff issues the final environmental impact statement for the limited work authorization in accordance with subpart A of part 51 of this chapter;

(ii) The presiding officer makes the finding in § 51.105(c) or § 51.107(d) of this chapter, as applicable;

(iii) The Director determines that the applicable standards and requirements of the Act, and the Commission's regulations applicable to the activities to be conducted under the limited work authorization, have been met. The applicant is technically qualified to engage in the activities authorized. Issuance of the limited work authorization will provide reasonable assurance of adequate protection to public health and safety and will not be inimical to the common defense and security; and

(iv) The presiding officer finds that there are no unresolved safety issues relating to the activities to be conducted under the limited work authorization that would constitute good cause for withholding the authorization.

(2) Each limited work authorization will specify the activities that the holder is authorized to perform.

(f) *Effect of limited work authorization.* Any activities undertaken under a limited work authorization are entirely at the risk of the applicant and, except as to the matters determined under paragraph (e)(1) of this section, the issuance of the limited work authorization has no bearing on the issuance of a construction permit or combined license with respect to the requirements of the Act, and rules, regulations, or orders issued under the Act. The environmental impact statement for a

construction permit or combined license application for which a limited work authorization was previously issued will not address, and the presiding officer will not consider, the sunk costs of the holder of limited work authorization in determining the proposed action (*i.e.*, issuance of the construction permit or combined license).

(g) *Implementation of redress plan.* If construction is terminated by the holder, the underlying application is withdrawn by the applicant or denied by the NRC, or the limited work authorization is revoked by the NRC, then the holder must begin implementation of the redress plan in a reasonable time. The holder must also complete the redress of the site no later than 18 months after termination of construction, revocation of the limited work authorization, or upon effectiveness of the Commission's final decision denying the associated construction permit application or the underlying combined license application, as applicable.

PART 51—ENVIRONMENTAL PROTECTION REGULATIONS FOR DOMESTIC LICENSING AND RELATED REGULATORY FUNCTIONS

■ 11. The authority citation for part 51 continues to read as follows:

Authority: Sec. 161, 68 Stat. 948, as amended, sec. 1701, 106 Stat. 2951, 2952, 2953 (42 U.S.C. 2201, 2297f); secs. 201, as amended, 202, 88 Stat. 1242, as amended, 1244 (42 U.S.C. 5841, 5842); sec. 1704, 112 Stat. 2750 (44 U.S.C. 3504 note). Subpart A also issued under National Environmental Policy Act of 1969, secs. 102, 104, 105, 83 Stat. 853–854, as amended (42 U.S.C. 4332, 4334, 4335); and Pub. L. 95–604, Title II, 92 Stat. 3033–3041; and sec. 193, Pub. L. 101–575, 104 Stat. 2835 (42 U.S.C. 2243). Sections 51.20, 51.30, 51.60, 51.80, and 51.97 also issued under secs. 135, 141, Pub. L. 97–425, 96 Stat. 2232, 2241, and sec. 148, Pub. L. 100–203, 101 Stat. 1330–223 (42 U.S.C. 10155, 10161, 10168). Section 51.22 also issued under sec. 274, 73 Stat. 688, as amended by 92 Stat. 3036–3038 (42 U.S.C. 2021) and under Nuclear Waste Policy Act of 1982, sec. 121, 96 Stat. 2228 (42 U.S.C. 10141). Sections 51.43, 51.67, and 51.109 also issued under Nuclear Waste Policy Act of 1982, sec. 114(f), 96 Stat. 2216, as amended (42 U.S.C. 10134(f)).

■ 12. In § 51.4, a new definition of ''construction'' is added to read as follows:

§ 51.4 Definitions.

* * * * *

Construction means the activities in paragraph (1) of this definition, and does not mean the activities in paragraph (2) of this definition.

(1) Activities constituting construction are the driving of piles, subsurface preparation, placement of backfill, concrete, or permanent retaining walls within an excavation, installation of foundations, or in-place assembly, erection, fabrication, or testing, which are for:

(i) Safety-related structures, systems, or components (SSCs) of a facility, as defined in 10 CFR 50.2;

(ii) SSCs relied upon to mitigate accidents or transients or used in plant emergency operating procedures;

(iii) SSCs whose failure could prevent safety-related SSCs from fulfilling their safety-related function;

(iv) SSCs whose failure could cause a reactor scram or actuation of a safety-related system;

(v) SSCs necessary to comply with 10 CFR part 73;

(vi) SSCs necessary to comply with 10 CFR 50.48 and criterion 3 of 10 CFR part 50, appendix A; and

(vii) Onsite emergency facilities (*i.e.*, technical support and operations support centers), necessary to comply with 10 CFR 50.47 and 10 CFR part 50, appendix E.

(2) Construction does not include:

(i) Changes for temporary use of the land for public recreational purposes;

(ii) Site exploration, including necessary borings to determine foundation conditions or other preconstruction monitoring to establish background information related to the suitability of the site, the environmental impacts of construction or operation, or the protection of environmental values;

(iii) Preparation of a site for construction of a facility, including clearing of the site, grading, installation of drainage, erosion and other environmental mitigation measures, and construction of temporary roads and borrow areas;

(iv) Erection of fences and other access control measures;

(v) Excavation;

(vi) Erection of support buildings (such as, construction equipment storage sheds, warehouse and shop facilities, utilities, concrete mixing plants, docking and unloading facilities, and office buildings) for use in connection with the construction of the facility;

(vii) Building of service facilities, such as paved roads, parking lots, railroad spurs, exterior utility and lighting systems, potable water systems, sanitary sewerage treatment facilities, transmission lines;

(viii) Procurement or fabrication of components or portions of the proposed facility occurring at other than the final, in-place location at the facility;

(ix) Manufacture of a nuclear power reactor under a manufacturing license under subpart F of part 52 of this chapter to be installed at the proposed site and to be part of the proposed facility; or

(x) With respect to production or utilization facilities, other than testing facilities and nuclear power plants, required to be licensed under Section 104.a or Section 104.c of the Act, the erection of buildings which will be used for activities other than operation of a facility and which may also be used to house a facility (*e.g.*, the construction of a college laboratory building with space for installation of a training reactor).

* * * * *

■ 13. In § 51.17, paragraph (b) is revised to read as follows:

§ 51.17 Information collection requirements; OMB approval.

* * * * *

(b) The approved information collection requirements in this part appear in §§ 51.6, 51.16, 51.41, 51.45, 51.49, 51.50, 51.51, 51.52, 51.53, 51.54, 51.55, 51.58, 51.60, 51.61, 51.62, 51.66, 51.68, and 51.69.

■ 14. In § 51.45, paragraph (c) is revised to read as follows:

§ 51.45 Environmental report.

* * * * *

(c) *Analysis.* The environmental report must include an analysis that considers and balances the environmental effects of the proposed action, the environmental impacts of alternatives to the proposed action, and alternatives available for reducing or avoiding adverse environmental effects. An environmental report prepared at the early site permit stage under § 51.50(b), construction permit stage under § 51.50(a), or combined license stage under § 51.50(c) must include a description of impacts of the preconstruction activities performed by the applicant (*i.e.*, those activities listed in paragraph (b)(1) through (b)(8) in the definition of construction contained in § 51.4) necessary to support the construction and operation of the facility which is the subject of the limited work authorization, construction permit, or combined license application. The environmental report must also contain an analysis of the cumulative impacts of the activities to be authorized by the limited work authorization, construction permit, or combined license in light of the preconstruction impacts described in the environmental report. Except for an environmental report prepared at the early site permit stage, or an environmental report prepared at the

license renewal stage under § 51.53(c), the analysis in the environmental report should also include consideration of the economic, technical, and other benefits and costs of the proposed action and its alternatives. Environmental reports prepared at the license renewal stage under § 51.53(c) need not discuss the economic or technical benefits and costs of either the proposed action or alternatives except if these benefits and costs are either essential for a determination regarding the inclusion of an alternative in the range of alternatives considered or relevant to mitigation. In addition, environmental reports prepared under § 51.53(c) need not discuss issues not related to the environmental effects of the proposed action and its alternatives. The analyses for environmental reports shall, to the fullest extent practicable, quantify the various factors considered. To the extent that there are important qualitative considerations or factors that cannot be quantified, those considerations or factors shall be discussed in qualitative terms. The environmental report should contain sufficient data to aid the Commission in its development of an independent analysis.

* * * * *

■ 15. A new § 51.49 is added under the heading Environmental Reports-Production and Utilization Facilities to read as follows:

§ 51.49 Environmental report—limited work authorization.

(a) *Limited work authorization submitted as part of complete construction permit or combined license application*. Each applicant for a construction permit or combined license applying for a limited work authorization under § 50.10(d) of this chapter in a complete application under 10 CFR 2.101(a)(1) through (a)(4), shall submit with its application a separate document, entitled, ''Applicant's Environmental Report—Limited Work Authorization Stage,'' which is in addition to the environmental report required by § 51.50 of this part. Each environmental report must also contain the following information:

(1) A description of the activities proposed to be conducted under the limited work authorization;

(2) A statement of the need for the activities; and

(3) A description of the environmental impacts that may reasonably be expected to result from the activities, the mitigation measures that the applicant proposes to implement to achieve the level of environmental impacts described, and a discussion of the reasons for rejecting mitigation measures that could be employed by the applicant to further reduce environmental impacts.

(b) *Phased application for limited work authorization and construction permit or combined license*. If the construction permit or combined license application is filed in accordance with § 2.101(a)(9) of this chapter, then the environmental report for part one of the application may be limited to a discussion of the activities proposed to be conducted under the limited work authorization. If the scope of the environmental report for part one is so limited, then part two of the application must include the information required by § 51.50, as applicable.

(c) *Limited work authorization submitted as part of an early site permit application*. Each applicant for an early site permit under subpart A of part 52 of this chapter requesting a limited work authorization shall submit with its application the environmental report required by § 51.50(b). Each environmental report must contain the following information:

(1) A description of the activities proposed to be conducted under the limited work authorization;

(2) A statement of the need for the activities; and

(3) A description of the environmental impacts that may reasonably be expected to result from the activities, the mitigation measures that the applicant proposes to implement to achieve the level of environmental impacts described, and a discussion of the reasons for rejecting mitigation measures that could be employed by the applicant to further reduce environmental impacts.

(d) *Limited work authorization request submitted by early site permit holder*. Each holder of an early site permit requesting a limited work authorization shall submit with its application a document entitled, ''Applicant's Environmental Report—Limited Work Authorization under Early Site Permit,'' containing the following information:

(1) A description of the activities proposed to be conducted under the limited work authorization;

(2) A statement of the need for the activities;

(3) A description of the environmental impacts that may reasonably be expected to result from the activities, the mitigation measures that the applicant proposes to implement to achieve the level of environmental impacts described, and a discussion of the reasons for rejecting mitigation measures that could be employed by the applicant to further reduce environmental impacts; and

(4) Any new and significant information for issues related to the impacts of construction of the facility that were resolved in the early site permit proceeding with respect to the environmental impacts of the activities to be conducted under the limited work authorization.

(5) A description of the process used to identify new and significant information regarding NRC's conclusions in the early site permit environmental impact statement. The process must be a reasonable methodology for identifying this new and significant information.

(e) *Limited work authorization for a site where an environmental impact statement was prepared, but the facility construction was not completed*. If the limited work authorization is for activities to be conducted at a site for which the Commission has previously prepared an environmental impact statement for the construction and operation of a nuclear power plant, and a construction permit was issued but construction of the plant was never completed, then the applicant's environmental report may incorporate by reference the earlier environmental impact statement. In the event of such referencing, the environmental report must identify:

(1) Any new and significant information material to issues related to the impacts of construction of the facility that were resolved in the construction permit proceeding for the matters required to be addressed in paragraph (a) of this section; and

(2) A description of the process used to identify new and significant information regarding the NRC's conclusions in the construction permit environmental impact statement. The process must use a reasonable methodology for identifying this new and significant information.

(f) *Environmental Report*. An environmental report submitted in accordance with this section must separately evaluate the environmental impacts and proposed alternatives attributable to the activities proposed to be conducted under the limited work authorization. At the option of the applicant, the ''Applicant's Environmental Report—Limited Work Authorization Stage,'' may contain the information required to be submitted in the environmental report required under § 51.50, which addresses the impacts of construction and operation for the proposed facility (including the environmental impacts attributable to the limited work authorization), and

discusses the overall costs and benefits balancing for the proposed action.

■ 16. In § 51.71, paragraph (e) is redesignated as paragraph (f), and a new paragraph (e) is added to read as follows:

§ 51.71 Draft environmental impact statement—contents.

* * * * *

(e) *Effect of limited work authorization.* If a limited work authorization was issued either in connection with or subsequent to an early site permit, or in connection with a construction permit or combined license application, then the environmental impact statement for the construction permit or combined license application will not address or consider the sunk costs associated with the limited work authorization.

* * * * *

■ 17. Section 51.76 is added to read as follows:

§ 51.76 Draft environmental impact statement—limited work authorization.

The NRC will prepare a draft environmental impact statement relating to issuance of a limited work authorization in accordance with the procedures and measures described in §§ 51.70, 51.71, and 51.73, as further supplemented or modified in the following paragraphs.

(a) *Limited work authorization submitted as part of complete construction permit or combined license application.* If the application for a limited work authorization is submitted as part of a complete construction permit or combined license application, then the NRC may prepare a partial draft environmental impact statement. The analysis called for by § 51.71(d) must be limited to the activities proposed to be conducted under the limited work authorization. Alternatively, the NRC may prepare a complete draft environmental impact statement prepared in accordance with § 51.75(a) or (c), as applicable.

(b) *Phased application for limited work authorization under § 2.101(a)(9) of this chapter.* If the application for a limited work authorization is submitted in accordance with § 2.101(a)(9) of this chapter, then the draft environmental impact statement for part one of the application may be limited to consideration of the activities proposed to be conducted under the limited work authorization, and the proposed redress plan. However, if the environmental report contains the full set of information required to be submitted under § 51.50(a) or (c), then a draft environmental impact statement must be prepared in accordance with § 51.75(a) or (c), as applicable. Siting issues, including whether there is an obviously superior alternative site, or issues related to operation of the proposed nuclear power plant at the site, including need for power, may not be considered. After part two of the application is docketed, the NRC will prepare a draft supplement to the final environmental impact statement for part two of the application under § 51.72. No updating of the information contained in the final environmental impact statement prepared for part one is necessary in preparation of the supplemental environmental impact statement. The draft supplement must consider all environmental impacts associated with the prior issuance of the limited work authorization, but may not address or consider the sunk costs associated with the limited work authorization.

(c) *Limited work authorization submitted as part of an early site permit application.* If the application for a limited work authorization is submitted as part of an application for an early site permit, then the NRC will prepare an environmental impact statement in accordance with § 51.75(b). However, the analysis called for by § 51.71(d) must also address the activities proposed to be conducted under the limited work authorization.

(d) *Limited work authorization request submitted by an early site permit holder.* If the application for a limited work authorization is submitted by a holder of an early site permit, then the NRC will prepare a draft supplement to the environmental impact statement for the early site permit. The supplement is limited to consideration of the activities proposed to be conducted under the limited work authorization, the adequacy of the proposed redress plan, and whether there is new and significant information identified with respect to issues related to the impacts of construction of the facility that were resolved in the early site permit proceeding with respect to the environmental impacts of the activities to be conducted under the limited work authorization. No other updating of the information contained in the final environmental impact statement prepared for the early site permit is required.

(e) *Limited work authorization for a site where an environmental impact statement was prepared, but the facility construction was not completed.* If the limited work authorization is for activities to be conducted at a site for which the Commission has previously prepared an environmental impact statement for the construction and operation of a nuclear power plant, and a construction permit was issued but construction of the plant was not completed, then the draft environmental impact statement shall incorporate by reference the earlier environmental impact statement. The draft environmental impact statement must be limited to a consideration of whether there is significant new information with respect to the environmental impacts of construction, relevant to the activities to be conducted under the limited work authority, so that the conclusion of the referenced environmental impact statement on the impacts of construction would, when analyzed in accordance with § 51.71, lead to the conclusion that the limited work authorization should not be issued or should be issued with appropriate conditions.

(f) *Draft environmental impact statement.* A draft environmental impact statement prepared under this section must separately evaluate the environmental impacts and proposed alternatives attributable to the activities proposed to be conducted under the limited work authorization. However, if the ''Applicant's Environmental Report—Limited Work Authorization Stage,'' also contains the information required to be submitted in the environmental report required under § 51.50, then the environmental impact statement must address the impacts of construction and operation for the proposed facility (including the environmental impacts attributable to the limited work authorization), and discuss the overall costs and benefits balancing for the underlying proposed action, in accordance with § 51.71, and § 51.75(a) or (c), as applicable.

■ 18. In § 51.103, a new paragraph (a)(6) is added to read as follows:

§ 51.103 Record of decision—general.

(a) * * *

(6) In a construction permit or a combined license proceeding where a limited work authorization under 10 CFR 50.10 was issued, the Commission's decision on the construction permit or combined license application will not address or consider the sunk costs associated with the limited work authorization in determining the proposed action.

* * * * *

■ 19. In § 51.104, a new paragraph (c) is added to read as follows:

§ 51.104 NRC proceeding using public hearings; consideration of environmental impact statement.

* * * * *

(c) In any proceeding in which a limited work authorization is requested, unless the Commission orders otherwise, a party to the proceeding may take a position and offer evidence only on the aspects of the proposed action within the scope of NEPA and this subpart which are within the scope of that party's admitted contention, in accordance with the provisions of part 2 of this chapter applicable to the limited work authorization or in accordance with the terms of any notice of hearing applicable to the limited work authorization. In the proceeding, the presiding officer will decide all matters in controversy among the parties.

■ 20. The heading of § 51.105 is revised, and a new paragraph (c) is added to read as follows:

§ 51.105 Public hearings in proceedings for issuance of construction permits or early site permits; limited work authorizations.

* * * * *

(c)(1) In addition to complying with the applicable provisions of § 51.104, in any proceeding for the issuance of a construction permit for a nuclear power plant or an early site permit under part 52 of this chapter, where the applicant requests a limited work authorization under § 50.10(d) of this chapter, the presiding officer shall—

(i) Determine whether the requirements of Section 102(2)(A), (C), and (E) of NEPA and the regulations in the subpart have been met, with respect to the activities to be conducted under the limited work authorization;

(ii) Independently consider the balance among conflicting factors with respect to the limited work authorization which is contained in the record of the proceeding, with a view to determining the appropriate action to be taken;

(iii) Determine whether the redress plan will adequately redress the activities performed under the limited work authorization, should limited work activities be terminated by the holder or the limited work authorization be revoked by the NRC, or upon effectiveness of the Commission's final decision denying the associated construction permit or early site permit, as applicable;

(iv) In an uncontested proceeding, determine whether the NEPA review conducted by the NRC staff for the limited work authorization has been adequate; and

(v) In a contested proceeding, determine whether, in accordance with the regulations in this subpart, the limited work authorization should be issued as proposed.

(2) If the limited work authorization is for activities to be conducted at a site for which the Commission has previously prepared an environmental impact statement for the construction and operation of a nuclear power plant, and a construction permit was issued but construction of the plant was never completed, then in making the determinations in paragraph (c)(1) of this section, the presiding officer shall be limited to a consideration whether there is, with respect to construction activities encompassed by the environmental impact statement which are analogous to the activities to be conducted under the limited work authorization, new and significant information on the environmental impacts of those activities, such that the limited work authorization should not be issued as proposed.

(3) The presiding officer's determination in this paragraph shall be made in a partial initial decision to be issued separately from, and in advance of, the presiding officer's decision in paragraph (a) of this section.

■ 21. In § 51.107, the heading is revised, and a new paragraph (d) is added to read as follows:

§ 51.107 Public hearings in proceedings for issuance of combined licenses; limited work authorizations.

* * * * *

(d)(1) In any proceeding for the issuance of a combined license where the applicant requests a limited work authorization under § 50.10(d) of this chapter, the presiding officer, in addition to complying with any applicable provision of § 51.104, shall:

(i) Determine whether the requirements of Section 102(2)(A), (C), and (E) of NEPA and the regulations in this subpart have been met, with respect to the activities to be conducted under the limited work authorization;

(ii) Independently consider the balance among conflicting factors with respect to the limited work authorization which is contained in the record of the proceeding, with a view to determining the appropriate action to be taken;

(iii) Determine whether the redress plan will adequately redress the activities performed under the limited work authorization, should limited work activities be terminated by the holder or the limited work authorization be revoked by the NRC, or upon effectiveness of the Commission's final decision denying the combined license application;

(iv) In an uncontested proceeding, determine whether the NEPA review conducted by the NRC staff for the limited work authorization has been adequate; and

(v) In a contested proceeding, determine whether, in accordance with the regulations in this subpart, the limited work authorization should be issued as proposed by the Director of New Reactors or the Director of Nuclear Reactor Regulation, as applicable.

(2) If the limited work authorization is for activities to be conducted at a site for which the Commission has previously prepared an environmental impact statement for the construction and operation of a nuclear power plant, and a construction permit was issued but construction of the plant was never completed, then in making the determinations in paragraph (c)(1) of this section, the presiding officer shall be limited to a consideration whether there is, with respect to construction activities encompassed by the environmental impact statement which are analogous to the activities to be conducted under the limited work authorization, new and significant information on the environmental impacts of those activities, so that the limited work authorization should not be issued as proposed by the Director of New Reactors or the Director of Nuclear Reactor Regulation, as applicable.

(3) In making the determination required by this section, the presiding officer may not address or consider the sunk costs associated with the limited work authorization.

(4) The presiding officer's determination in this paragraph shall be made in a partial initial decision to be issued separately from, and in advance of, the presiding officer's decision in paragraph (a) of this section on the combined license.

PART 52—LICENSES, CERTIFICATIONS, AND APPROVALS FOR NUCLEAR POWER PLANTS

■ 22. The authority citation for part 52 continues to read as follows:

Authority: Secs. 103, 104, 161, 182, 183, 185, 186, 189, 68 Stat. 936, 948, 953, 954, 955, 956, as amended, sec. 234, 83 Stat. 444, as amended (42 U.S.C. 2133, 2201, 2232, 2233, 2235, 2236, 2239, 2282); secs. 201, 202, 206, 88 Stat. 1242, 1244, 1246, as amended (42 U.S.C. 5841, 5842, 5846); sec. 1704, 112 Stat. 2750 (44 U.S.C. 3504 note).

■ 23. In § 52.1(a), the definition for ''*Limited work authorization*'' is added to read as follows:

§ 52.1 Definitions.

(a) * * *

Limited work authorization means the authorization provided by the Director of New Reactors or the Director of Nuclear Reactor Regulation under § 50.10 of this chapter.

* * * * *

■ 24. In § 52.17, paragraph (c) is revised to read as follows:

§ 52.17 Contents of applications; technical information.

* * * * *

(c) An applicant may request that a limited work authorization under 10 CFR 50.10 be issued in conjunction with the early site permit. The application must include the information otherwise required by 10 CFR 50.10(d)(3). Applications submitted before, and pending as of November 8, 2007, must include the information required by § 52.17(c) effective on the date of docketing.

■ 25. In § 52.24, paragraph (c) is revised to read as follows:

§ 52.24 Issuance of early site permit.

* * * * *

(c) The early site permit shall specify those 10 CFR 50.10 activities requested under § 52.17(c) that the permit holder is authorized to perform.

■ 26. Section 52.27 is redesignated as § 52.26, and a new § 52.27 is added to read as follows:

§ 52.27 Limited work authorization after issuance of early site permit.

A holder of an early site permit may request a limited work authorization in accordance with § 50.10 of this chapter.

■ 27. In § 52.80, paragraphs (b) and (c) are revised to read as follows:

§ 52.80 Contents of applications; additional technical information.

* * * * *

(b) An environmental report, either in accordance with 10 CFR 51.50(c) if a limited work authorization under 10 CFR 50.10 is not requested in conjunction with the combined license application, or in accordance with §§ 51.49 and 51.50(c) of this chapter if a limited work authorization is requested in conjunction with the combined license application.

(c) If the applicant wishes to request that a limited work authorization under 10 CFR 50.10 be issued before issuance of the combined license, the application must include the information otherwise required by 10 CFR 50.10, in accordance with either 10 CFR 2.101(a)(1) through (a)(4), or 10 CFR 2.101(a)(9).

■ 28. Section 52.91 is revised to read as follows:

§ 52.91 Authorization to conduct limited work authorization activities.

(a) If the application does not reference an early site permit which authorizes the holder to perform the activities under 10 CFR 50.10(d), the applicant may not perform those activities without obtaining the separate authorization required by 10 CFR 50.10(d). Authorization may be granted only after the presiding officer in the proceeding on the application has made the findings and determination required by 10 CFR 50.10(e), and the Director of New Reactors or the Director of Nuclear Reactor Regulation makes the determination required by 10 CFR 50.10(e).

(b) If, after an applicant has performed the activities permitted by paragraph (a) of this section, the application for the combined license is withdrawn or denied, then the applicant shall implement the approved site redress plan.

■ 29. In § 52.99, paragraph (a) is revised to read as follows:

§ 52.99 Inspection during construction.

(a) The licensee shall submit to the NRC, no later that 1 year after issuance of the combined license or at the start of construction as defined in 10 CFR 50.10(a), whichever is later, its schedule for completing the inspections, tests, or analyses in the ITAAC. The licensee shall submit updates to the ITAAC schedules every 6 months thereafter and, within 1 year of its scheduled date for initial loading of fuel, the licensee shall submit updates to the ITAAC schedule every 30 days until the final notification is provided to the NRC under paragraph (c)(1) of this section.

* * * * *

PART 100—REACTOR SITE CRITERIA

■ 30. The authority citation for part 100 continues to read as follows:

Authority: Secs. 103, 104, 161, 182, 68 Stat. 936, 937, 948, 953, as amended (42 U.S.C. 2133, 2134, 2201, 2232); secs. 201, as amended, 202, 88 Stat. 1242, as amended, 1244 (42 U.S.C. 5841, 5842); sec. 1704, 112 Stat. 2750 (44 U.S.C. 3504 note).

■ 31. In § 100.23, paragraph (b) is revised to read as follows:

§ 100.23 Geologic and seismic siting criteria.

* * * * *

(b) *Commencement of construction.* The investigations required in paragraph (c) of this section are not considered ''construction'' as defined in 10 CFR 50.10(a).

* * * * *

Dated at Rockville, Maryland, this 25th day of September 2007.

For the Nuclear Regulatory Commission.

Annette L. Vietti-Cook,

Secretary of the Commission.

[FR Doc. E7–19312 Filed 10–5–07; 8:45 am]

BILLING CODE 7590–01–P

Federal Register

Tuesday,
October 9, 2007

Part IV

Department of Transportation

National Highway Traffic Safety Administration

49 CFR Part 571

Federal Motor Vehicle Safety Standards; Brake Hoses; Final Rule and Proposed Rule

DEPARTMENT OF TRANSPORTATION

National Highway Traffic Safety Administration

49 CFR Part 571

[Docket No. NHTSA–2007–29349]

RIN 2127–AK01

Federal Motor Vehicle Safety Standards; Brake Hoses

AGENCY: National Highway Traffic Safety Administration (NHTSA), Department of Transportation (DOT).

ACTION: Final rule; technical amendments; response to petitions.

SUMMARY: This document, together with a companion notice of proposed rulemaking (NPRM) published in today's edition of the **Federal Register**, responds to petitions for reconsideration of a December 2004 final rule that updated the Federal motor vehicle safety standard on brake hoses, and to a related petition for rulemaking. In that rule, we incorporated updated versions of substantive specifications of several Society of Automotive Engineers (SAE) Recommended Practices relating to hydraulic brake hoses, vacuum brake hoses, air brake hoses, plastic air brake tubing, and end fittings.

In this document, we deny several of the petitions and explain why. We also correct typographical errors in, and inadvertent omissions from, the December 20, 2004 final rule.

In the companion NPRM, we respond to additional issues raised in the petitions, and propose a number of amendments to the brake hose rule in response to the petitions.

DATES: *Effective date:* This final rule becomes effective December 21, 2007.

Compliance date: Optional early compliance is permitted as of October 9, 2007.

Comments: Any petitions for reconsideration of today's final rule must be received by NHTSA not later than November 23, 2007.

ADDRESSES: Petitions for reconsideration should refer to the docket number for this action and be submitted to: Administrator, National Highway Traffic Safety Administration, 1200 New Jersey Avenue, SE., Washington, DC 20590, with a copy to DOT Docket Operations, U.S. Department of Transportation, Rm. W12–140, 1200 New Jersey Avenue, SE., Washington, DC 20590. Please see the Privacy Act heading under Rulemaking Analyses and Notices.

FOR FURTHER INFORMATION CONTACT: For non-legal issues, Mr. Jeff Woods, Vehicle Dynamics Division, Office of Vehicle Safety Standards (Telephone: 202–366–6206) (Fax: 202–366–4921).

For legal issues, Ms. Dorothy Nakama, Office of the Chief Counsel (Telephone: 202–366–2992) (Fax: 202–366–3820).

You may send mail to both of these officials at: National Highway Traffic Safety Administration, 1200 New Jersey Avenue, SE., Washington, DC 20590.

SUPPLEMENTARY INFORMATION:

Table of Contents

I. Background
II. Final Rule of December 20, 2004
III. Petitions
IV. Issues Raised by Petitioners and NHTSA's Responses
A. Hydraulic Brake Hoses
1. Expansion and Burst Strength (Volumetric Expansion) Test
B. Plastic Air Brake Tubing
1. General
2. Specifying Plastic v. Nylon
3. Resistance to Battery Acid
4. High Temperature Burst Strength Test
5. High Temperature Conditioning, Low Temperature Impact Resistance Test
6. Adhesion Test
7. Long Term High Temperature Conditioning and Moisture Absorption Test
V. Listing and Description of Corrections
VI. Statutory Bases for the Final Rule
VII. Effective Date
VIII. Rulemaking Analyses and Notices
Final Rule Regulatory Text

I. Background

On October 30, 1998, a joint petition for rulemaking was filed by Elf Atochem North America, Inc., Mark IV Industrial/Dayco Eastman, and Parker Hannifin Corporation, three brake hose manufacturers. The petitioners petitioned for certain requirements relating to brake hoses, brake hose tubing, and brake hose end fittings administered by the Federal Motor Carrier Safety Administration (FMCSA) to be incorporated into the brake hose standard that is currently administered by the National Highway Traffic Safety Administration (''NHTSA'' or the ''agency''). Specifically, the petitioners sought incorporation of the requirements in section 393.45 (Brake tubing and hose, adequacy) and section 393.46 (Brake tubing and hose connections) of the Federal Motor Carrier Safety Regulations (FMCSR) into section 571.106 (Brake hoses) of the Federal motor vehicle safety standards (''FMVSS''). The petition requested that the application of these SAE specifications be limited to hose, tubing, and fittings used on trucks, truck-trailer combinations, and buses with either a GVWR greater than 10,000 lbs. or which are designed to transport 16 or more people, including the driver. In addition, the petitioners requested that the current versions of the SAE specifications be adopted instead of the older versions cited in the FMCSRs.

NHTSA granted the joint petition for rulemaking, and published a notice of proposed rulemaking on May 15, 2003 (68 FR 26384, DOT Docket No. 03–14483). The agency agreed with the petitioners that there was a safety need to transfer the brake hose, tubing, and fitting requirements currently contained in sections 393.45 and 393.46 of the FMCSRs to FMVSS No. 106, before the FMCSA removes those requirements. NHTSA tentatively concluded that to ensure the continued safety of commercial motor vehicle braking systems, the substantive specifications of the SAE Recommended Practices should be incorporated into FMVSS No. 106, with a few exceptions as noted. This would involve, among other changes, establishing a new category in the standard for plastic air brake tubing, end fittings, and tubing assemblies.

NHTSA's decision to grant the joint petition was also based on the fact that FMVSS No. 106 had not been substantially updated in many years. Revisions over the past 20 years primarily addressed labeling issues, inclusion of metric-sized brake hoses, updating test fluids to match advances in industry, and minor regulatory revisions to individual test conditions such as the whip test and the adhesion test. We noted that most of the substantive requirements in Standard 106, other than the labeling requirements, were originally based on SAE standards and American Society for Testing and Materials (ASTM) standards referenced therein. While the SAE and ASTM standards have been modified over time to keep pace with technological developments in the industry, the substantive requirements of FMVSS No. 106 have remained relatively unchanged. NHTSA's proposed changes to Standard No. 106 intended to take into account the substantial technological developments that have occurred. Incorporating many of the SAE standards' performance requirements is consistent with Office of Management and Budget (OMB) Circular A–119, which directs federal agencies to use and/or develop voluntary consensus industry standards, in accordance with Pub. L. 104–113, the ''National Technology Transfer and Advancement Act of 1995.''

II. Final Rule of December 20, 2004

On December 20, 2004 (69 FR 76298, DOT Docket No. NHTSA–2003–14483), NHTSA published a final rule amending the brake hose standard. The agency's

rule differed in the following respects from that petitioned for by the petitioners—

First, instead of simply incorporating complete SAE standards by reference as the FMCSRs currently do, NHTSA incorporated only the specific requirements/specifications of the SAE standards that are either more rigorous than those in Standard No. 106 or are not present at all in FMVSS No. 106.

Second, the agency did not limit the application of those SAE requirements/specifications to brake hose, tubing, and fittings used on commercial motor vehicles, but made them applicable to all motor vehicles. NHTSA determined that all brake hose, tubing, and fittings can and should meet the requirements/specifications, regardless of their end use.

Third, although NHTSA agreed with the petitioners that changes to FMVSS No. 106 should be based on the most recent versions of the SAE standards, instead of the older versions cited in the FMCSRs, the agency noted that a number of SAE's standards have been updated since the joint petition was filed (in 1998). Accordingly, NHTSA relied on what it believed to be the most recent versions of the SAE standards.

Fourth, the agency did not incorporate SAE standards relating to copper tubing, galvanized steel pipe, or end fittings used with metallic or non-metallic tubing, materials that are occasionally used in chassis plumbing. Since these products are not considered to be brake hoses, NHTSA determined them not to be appropriate to include in FMVSS No. 106, a brake hose standard.

Fifth, NHTSA did not incorporate the material and construction specifications for Type A and Type B tubing contained in SAE J844, *Nonmetallic Air Brake System Tubing,* and SAE J1394, *Metric Nonmetallic Air Brake System Tubing* because the agency tentatively concluded that incorporating those material specifications would be design-restrictive.

Sixth, NHTSA did not incorporate the manufacturer identification requirements in SAE J1401, *Hydraulic Brake Hose Assemblies for Use with Nonpetroleum-Base Hydraulic Fluids,* because it concluded that the manufacturer identification requirements already present in FMVSS No. 106 are sufficient.

III. Petitions

In early 2005, NHTSA received petitions for reconsideration of the December 20, 2004 final rule from Cooper Standard Automotive (Fluid Division), Degussa Corporation, George Apgar Consulting, MPC, Inc., and Parker Hannifin Corporation (with separate submissions from its Brass Division and from its Hose Products Division). In July 2005, Arkema, Inc., submitted a document styled as a petition for reconsideration. NHTSA is treating the document as a petition for rulemaking instead since its regulations (49 CFR 553.35(a)) provide that a document styled as a petition for reconsideration of a final rule and received by the agency more than 45 days after the issuance of that final rule will be treated as a petition for rulemaking. The petitions addressed a wide range of FMVSS No. 106 subjects.

In this document, we deny several of the petitions and explain why. We also correct typographical errors in, and inadvertent omissions from, the December 20, 2004 final rule. In a companion NPRM published in today's edition of the **Federal Register**, we respond to additional issues raised in the petitions, and propose a number of amendments to the brake hose rule in response to the petitions.

IV. Issues Raised by Petitioners and NHTSA's Responses

A. Hydraulic Brake Hoses

1. Expansion and Burst Strength (Volumetric Expansion) Test—Before the final rule was issued, expansion tests were conducted at 1,000 and 1,500 psi. In the final rule, NHTSA added a 2,900 psi expansion test in order to align FMVSS No. 106 with the latest revision of SAE J1401, Road Vehicle-Hydraulic Brake Hose Assemblies for Use with Nonpetroleum-Base Hydraulic Fluids, and incorporated the revised hydraulic expansion requirements in Table I—Maximum Expansion of Free Length Brake Hose (69 FR 76322). The inside diameter of the hoses listed in the first column of Table I are: ⅛ inch, or 3mm or less; 3⁄16 inch or 4–5 mm and ¼ inch or 6 mm or more.

In a request for an interpretation, Eaton Corporation asked for clarification of the set of measurements to use from Table I if the inside diameter of a hydraulic brake hose is greater than ⅛ inch but less than 3⁄16 inch. In a letter dated January 26, 2005, NHTSA explained that the expansion requirements for the 3⁄16 inch brake hose apply to a brake hose that is larger than ⅛ inch but smaller than 3⁄16 inch: ''In other words, the set covers brake hose with inside diameter greater than '⅛ inch or 3mm' and less than '¼ inch or 6 mm.' Thus, the inside diameter of your hydraulic brake hose falls into the category described in Table 1 as '3⁄16 inch or 4 to 5 mm.' ''

In this final rule, NHTSA will make explicit the principle explained in the January 26, 2005 final rule by amending the identifying row titles in the first column of Table 1. The inside diameters will now be identified as: ''⅛ inch, or 3 mm, or less''; ''> [greater than] ⅛ inch or 3 mm, to 3⁄16 inch, or 5 mm''; and ''> 3⁄16 inch or 5 mm.'' Thus, after the changes, it will be evident that hydraulic brake hoses with inside diameters greater than ⅛ inch but less than 3⁄16 inch fall into the category described in Table I as ''> 1/8 inch or 3 mm, to 3⁄16 inch, or 5 mm.''

B. Plastic Air Brake Tubing

1. General—In response to plastic air brake tubing requirements in the final rule, we received requests from four companies. Each of them (Degussa, Parker Brass Division, Apgar, and Arkema) stated that because the agency did not include a requirement that plastic air brake tubing be constructed of nylon (polyamide), there are risks that alternate materials will not provide adequate long-term service in air brake systems. In addition, Arkema petitioned for inclusion of other tests; a battery acid resistance test requirement for copolyester tubing; a high temperature burst strength test; an increase in the length of time for the high temperature conditioning test from 72 hours to 1,000 hours; a quantitative adhesion test (also petitioned for by Degussa); and an increase in the length of time for the long-term high temperature conditioning and moisture absorption test from 100 hours to 720 hours. As explained below, NHTSA has decided it will not make any of these additions to test procedures applicable to plastic air brake tubing.

2. Specifying Plastic v. Nylon—In the December 2004 final rule, the agency adopted the generic term ''plastic'' for air brake tubing, rather than specify that air brake tubing must be constructed from ''nylon.'' As discussed in the final rule, the agency did not intend restrictions in FMVSS No. 106 for material that may be used to manufacture air brake tubing (69 FR 76306). The agency stated that it was adopting 22 performance test requirements (one of these is a dimensional specification of the tubing) to ensure the safety of plastic air brake tubing.

Apgar stated that removing material requirements from standards and regulations is an excellent goal to promote innovation, but makes standards development more difficult because the known properties of specific materials cannot be taken for granted when the material is not

specified. Apgar stated that in the absence of specifying polyamide as the material for air brake tubing, more requirements than those in the agency's final rule are needed. Apgar stated that there is an ongoing activity by an SAE subcommittee to develop a standard designated as SAE J2547 to describe requirements for alternate construction air brake tubing, but that this standard is still a working document.

Degussa stated that the 22 requirements for plastic air brake tubing adopted in the agency's final rule will not guarantee that the tubing material will provide safe service for air brake systems. It stated that none of the requirements in FMVSS No. 106 or in SAE J844 reflects long-term field use, and that many of the requirements are specific to nylon materials and do not cover potential deficiencies of new materials without a proven track record. Degussa cited SAE J2260, Nonmetallic Fuel System Tubing, with One or More Layers, that requires a 5,000-hour fuel exposure at 60 degrees Celsius and heat aging for 1,000 hours at 90 degrees Celsius before tests are conducted. It further stated that nylons used in air brake tubing have a successful track record of many years, but that for new materials, neither the requirements of SAE J844 nor the requirements in the FMVSS No. 106 final rule are sufficient. Degussa proposed that a statement be added that materials used for air brake tubing must demonstrate a track record over several years, or meet long term test requirements agreed upon between material supplier, tubing manufacturer, and end user.

Parker stated its belief that compared to the then-existing rule, the agency's December 20, 2004 final rule compromises vehicle safety, and that the new requirements are less practicable than the previous requirements in FMVSS No. 106, because the agency did not specify nylon for air brake tubing. Parker believes that the burden of compliance will shift from the brake tubing component manufacturers to the assemblers of air brake tubing assemblies, and that the DOT markings on tubing and end fittings will no longer assure that these components are compatible.

Parker stated that numerous entities, including service shops, may have to acquire testing capability for the assemblies made with alternate tubing materials and the agency did not consider costs of such testing capability. Parker stated that the chance of tubing assemblies being put into service that do not meet the requirements of the FMVSS No. 106 final rule is significant. Parker stated that it knows of non-polyamide materials for tubing that can meet the requirements of the final rule for tubing, but when made into assemblies they do not meet the requirements of the final rule. Parker provided no examples of its assertions. A brake hose assembly that does not meet the December 20, 2004 final rule (when it takes effect) would be in noncompliance. A noncompliant assembly would not be permitted on a motor vehicle.

Arkema stated that the strong safety record of polyamides is well established, but it is impossible to foresee what testing will be required upon introduction of countless unknown materials and constructions. It stated that similar challenges were met by the International Standards Organization (ISO) TC22 SC2 Working Group that developed ISO 7628, a standard for plastic air brake tubing that allows some flexibility of composition of the material used in the construction of the tubing. Arkema also mentioned the efforts to develop SAE J2547 but acknowledged that this SAE standard is still a working document. Arkema asked that a list of all approved materials and constructions for the manufacture of nonmetallic air brake tubing be established, and that manufacturers of such alternate materials or constructions apply for approval from either the agency or from the SAE. Arkema asked that the optional early compliance provision in the final rule (that manufacturers may meet the new FMVSS No. 106 requirements starting on February 18, 2005) be rescinded until its requested changes to the final rule are made.

Arkema also stated that tubing made from materials that are more elastomeric (rubbery) than polyamide will probably require fittings designed especially for that tubing. Arkema asked for adoption of several new requirements for plastic air brake tubing including an adhesion test for tubing with multi-layer construction; a chemical resistance test for each layer of multi-layer tubing; a high-temperature burst test (similar to that specified in Deutsches Institüt für Normung e.V. (DIN) 73378); [1] increasing the time of conditioning for the heat aging requirement at S12.11 of FMVSS No. 106 from 72 hours to 1,000 hours; checking the effects of moisture conditioning and hydrolysis on the mechanical performance of alternative materials; and requiring that all currently available SAE J246 and J2494 fittings function correctly with any DOT 106-marked air brake tubing.

We have reviewed the requests and note that in many instances they are similar to the comments submitted by the same commenters in response to the NRPM. The issue of specifying the generic term ''plastic'' versus specifying ''nylon'' was discussed in the final rule (69 FR 76306). The agency determined that it would not be appropriate for FMVSS No. 106 to be design-restrictive regarding the material or construction methods for air brake tubing, but the standard should be performance based to the extent practicable. Arkema's suggestion that a list of approved materials and constructions for plastic air brake tubing be established and that manufacturers of alternate materials or constructions apply for approval from either the agency or the SAE, does not meet 49 U.S.C. Section 30115 *Certification of Compliance* that specifies self-certification by each manufacturer of motor vehicles and motor vehicle equipment.

Specifying nylon as the sole construction material for plastic air brake tubing would not permit alternate materials that can provide safe and satisfactory performance when used in air brake systems. Arkema's comments tacitly recognize this in Arkema's statement that use of new materials and constructions will allow innovation, and will perhaps lead to improved performance and economy. Therefore, the agency will consider only the issue of establishing appropriate minimum performance requirements to ensure the safety of plastic air brake tubing.

Parker and Arkema suggested that because the agency did not specify nylon as the sole material for plastic air brake tubing in the final rule, it was their belief that air brake tubing and end fittings may no longer work together. Parker stated that nylon provides a certain level of hardness and compressive strength that enables end fittings to retain the tubing. These companies also stated that there are non-nylon tubing materials that can meet the new FMVSS No. 106 requirements for the tubing, but will not retain the end fittings. The agency believes that if this were the case, such tubing would be non-compliant with the end fitting retention and performance requirements of air brake tubing assemblies in FMVSS No. 106 (S11.3.17 through S11.3.24) when the December 20, 2004 final rule takes effect. At such

[1] NHTSA notes that DIN 73378 (February 1996) at Section 1 *Scope* states in the English translation: ''This standard specifies requirements for and methods of testing polyamide tubing intended for the transport of fuel in motor vehicles * * *'' Searching on the DIN Web site, we were unable to find a DIN standard for polyamide air brake hose, other than DIN 74323 that covers coiled tubing only. No DIN standard was found for straight air brake tubing used on motor vehicles.

time, the tubing and/or the assembly would be subject to the agency's remedial actions for such non-compliance. Although the agency is not able to analyze hypothetical non-compliance situations, it does not agree that the burden of compliance has changed from the prior requirements under FMVSS No. 106 solely because nylon is not specified as the only material that can be used for air brake tubing.

In the future, if different types of air brake tubing are developed that require unique end fittings, additional rulemaking may be required to differentiate (by labeling or other means) the various types of tubing and end fittings. This is the approach currently taken in FMVSS No. 106 for rubber air brake hoses that are designated as Types A, AI, and AII (and now a Type AIII petitioned for addition by Gates Corporation), that each have unique dimensions and corresponding end fittings.

3. Resistance to Battery Acid—Apgar's petition for reconsideration requested that the agency include the battery acid resistance test from ISO 7628–2 in FMVSS No. 106. ISO 7628–2 includes a battery acid resistance test requirement for copolyester brake tubing. (See Section 7.11 of ISO 7628–2.) The ISO test requires that three samples of tubing be bent around a test cylinder with a radius of five times the outside diameter of the tubing, and then be immersed in a sulfuric acid solution at room temperature for 70 hours. After this conditioning, the tubing must have no dimensional change greater than two percent, no change in weight greater than two percent, nor any evidence of cracking.

In considering whether to propose adopting the ISO 7628–2 requirement into FMVSS No. 106 to ensure the safety of all types of plastic air brake tubing, the agency conducted additional review of SAE J844 and found that under Section 1—Scope, the standard states that the tubing it applies to is not to be used in an area subject to attack by battery acid. In practice, the agency believes that the battery installations on heavy vehicles are such that air brake tubing is not routed in the vicinity of the batteries, so that exposure to battery acid is avoided. There may be other situations (such as transportation of new or used lead-acid batteries) in which air brake tubing could be exposed to battery acid, but the agency believes that adequate environmental and hazardous materials transportation requirements make such exposure unlikely to occur. In addition, we note that the issue of the need for battery acid resistance for plastic air brake tubing was not raised by companies other than Apgar in response to the May 15, 2003 NPRM on air brake hoses or tubing. For these reasons, the part of Apgar's petition asking that FMVSS No. 106 include a battery acid resistance test for plastic air brake tubing incorporated from ISO 7628–2 is denied.

Arkema's petition requested the addition of several other requirements or substantial modifications (all relating to plastic air brake tubing) to the current FMVSS No. 106 requirements published in the agency's December 2004 final rule. These are described in further detail below.

4. High Temperature Burst Strength Test—Arkema asked that a high temperature burst test be added for plastic air brake tubing. Arkema's recommended text would specify filling a 12-inch brake hose assembly with ASTM IRM 903 oil and conditioning the assembly in air at 100 degrees Celsius (212 degrees Fahrenheit) for one hour, and then increasing the oil pressure inside the assembly at a rate of 3,000 psi per minute until burst occurs. The ratio of high temperature burst pressure to room temperature burst pressure is then calculated, and the required performance would be that the ratio must exceed 37 percent. In other words, the burst strength of the tubing at an elevated temperature must be greater than 37 percent of the burst strength at room temperature.

Arkema references DIN 73378, Polyamide Tubing for Use in Motor Vehicles as the reference standard for calculating this ratio. Arkema also provided a table of proposed burst strengths of each size of tubing at room temperature and at 100 degrees Celsius. The data in that table indicate high temperature to low temperature ratio equal to 40 percent.

Degussa recommended that a high temperature burst test from ISO 7628 be added to FMVSS No. 106 for plastic air brake tubing. The ISO test consists of conditioning the tubing in air at 100 degrees Celsius (212 degrees Fahrenheit) for 1 hour, and performing a burst strength test (pressure increased to failure within 15 to 60 seconds) with the tubing at the elevated temperature. The required performance is to withstand 2.50 MPa (363 psi) pressure if the tubing is designated as 1 MPa (145 psi) tubing, or to withstand 3.13 MPa (454 psi) pressure if the tubing is designated as 1.25 MPa (181 psi) tubing.

The agency evaluated the requirements from ISO 7628 to determine the ratio of high temperature burst strength to room temperature burst strength. For example, the required burst strength for a 1 MPa designated tube is 4.00 MPa at room temperature and 2.50 MPa at 100 degrees Celsius, which yields a ratio of 2.50/4.00 = 0.625 or 63 percent. This is a much higher ratio than that in the test proposed by Arkema, although it appears that the ISO 7628 room temperature burst strength requirements (e.g., 4 MPa (580 psi) for 1 MPa type tubing) are not particularly stringent in comparison to FMVSS No. 106 requirements (e.g., 5.5 MPa (800 psi) to 9.7 MPa (1400 psi) depending on tubing size), and even more so considering that trucks in the United States are operating at slightly lower air system pressures than European trucks.

Arkema provided a graph of burst pressures for 5/16 inch polyamide tubing over a temperature range of 50 to 275 degrees Fahrenheit that shows a considerable decrease in burst strength at higher temperatures. The graph shows the burst strength at 200 degrees Fahrenheit is approximately 450 psi or 45 percent of the 1,000 psi burst strength at 75 degrees Fahrenheit.

After reviewing Arkema's and Degussa's submissions, we have decided that there is no safety need that would be met by adding an additional high-temperature test to FMVSS No. 106. Based on requirements in SAE J844, the agency adopted a series of high-temperature conditioning tests in FMVSS No. 106 at S11.3.2, S11.3.8, S11.3.9, and S11.3.10 that use a conditioning temperature of 230 degrees Fahrenheit. Arkema stated that plastic air brake tubing may be subjected to intermittent temperatures under a vehicle hood as high as 248 degrees Fahrenheit. Arkema did not propose any tests be conducted at 248 degrees Fahrenheit.

We believe that vehicle manufacturers are not using plastic air brake tubing in high temperature applications because we have not seen temperature-related thermoplastic air brake tubing failures on vehicles. In a common application of air brake tubing used in the engine compartment of heavy trucks, the air brake tubing is routed to the treadle valve located on the driver's side of the engine compartment while the high-temperature engine exhaust components are typically on the passenger's side of the engine compartment.

In a high-temperature application such as an air compressor discharge line, a wire-reinforced elastomeric hose is used rather than plastic tubing. It is for these reasons that we believe we have not seen instances of plastic tubing failing from high-temperature exposure in vehicle applications. We are aware that the 2007 emission-compliant heavy

duty engines could result in higher underhood temperatures.

We also believe that the SAE Airbrake Tubing and Fittings Subcommittee, working with vehicle manufacturers who are installing the plastic air brake tubing on their vehicles, would be able to identify any need for changes in high-temperature resistance requirements for plastic air brake tubing.

5. High Temperature Conditioning, Low Temperature Impact Resistance—Arkema asked that the high-temperature conditioning (temperature soak at 230 degrees Fahrenheit) component in S11.3.10 *High temperature conditioning, low temperature impact resistance* of FMVSS No. 106, be increased from 72 hours to 1,000 hours. Arkema's justification for this request relates to their comment on intermittent high underhood temperatures that can reach 248 degrees Fahrenheit (measured at the brake tubing) for six minutes or longer upon stopping the truck in high ambient temperature conditions. Arkema stated that based on a service life of 5 years, with such a hot soak occurring four times every twenty-four hours of truck operation, an equivalent of 30 days of continuous exposure to high temperatures would result.

The agency does not dispute that brake tubing may see intermittent high temperatures in underhood applications, particularly under high ambient temperature conditions, but does not conclude that the substantial test burden that would result by increasing the S11.3.10 high temperature soak from 72 hours to 1,000 hours has been shown to be necessary to meet a safety issue. The agency does not conclude that Arkema has provided sufficient technical justification for such an increase in test burden in the absence of an apparent or known safety problem. For these reason, the increase of the high temperature conditioning component in S11.3.10 of FMVSS No. 106 from 72 hours to 1,000 hours is denied.

6. Adhesion Test—Degussa recommended including a quantitative adhesion test as described in S7.13 of SAE J2260, Nonmetallic Fuel System Tubing with One or More Layers, November 20042. This includes a peel test in which a sample of tubing is cut and then separated at the layer interface so that a peel test can be conducted on the strength of the interface bond. Degussa recommended that a minimum layer adhesion of 1 N/mm (5.6 pounds per inch) be achieved using this method.

Arkema recommended a similar test requirement. However, Arkema's suggested procedure would first subject the tubing to one of ten required pre-conditionings, including high temperature conditioning, boiling water conditioning, moisture conditioning, and ultraviolet light conditioning. Arkema's recommended test procedure describes how the layers of the tubing are initially separated using a scalpel, then additionally separated using pliers and clamped in a tensile testing machine for the peel test to be conducted. Arkema recommended a peel strength of 1.0 N/mm for an average value with no instantaneous peel strength less than 0.5 N/mm.

We discussed this issue in detail in both the May 2003 NPRM (68 FR 26400) and the December 2004 final rule (69 FR 76311). In the NPRM, the agency proposed an adhesion test after the tubing was subjected to high temperature conditioning. In the final rule, the agency decided not to include an adhesion test because the industry comments on this issue were divergent as to the peel strength that should be required, and because the test appeared to be problematic from compliance and enforcement standpoints.

In their petitions, neither Arkema nor Degussa have satisfactorily resolved the issues raised in the final rule regarding the adhesion tests. An adhesion test for fuel hose may be suitable for testing plastic tubing manufactured for fuel hoses where truly different layers of materials exist in the tubing for chemical resistance, mechanical strength and other factors. The layers in current plastic air brake tubing are, to the agency's knowledge, uniform in material and fully bonded such that they cannot be readily separated for a peel test. Arkema's proposed method of initiating separation of the layers by using a scalpel evidences the permanence of the bond in plastic air brake hoses. An adhesion test in this situation can ultimately end up testing the tensile strength of the brake tubing material rather than the strength of its bonds, in particular where a particular layer is very thin.

Furthermore, we believe that Arkema's recommendation for conducting ten pre-conditioning tests, each of which would be followed by an adhesion test, would be a substantial compliance test burden on the brake tubing manufacturers, especially since the agency is not aware of any safety problem that has occurred due to poor adhesion characteristics being exhibited by plastic air brake tubing. For these reasons, we see no safety justification to propose to add Arkema's recommended battery of adhesion tests. This portion of Arkema's petition is denied. For technical reasons that have been described regarding conducting adhesion tests on plastic tubing with high interlayer bonding properties, both Arkema's and Degussa's requests to add an adhesion test to FMVSS No. 106 for plastic air brake tubing are also denied.

7. Long-Term High Temperature Conditioning and Moisture Absorption—Arkema cited regional high humidity environments in the United States as a reason that the tubing conditioning in a humid environmental chamber in S12.6, *Moisture absorption and burst strength,* paragraph (c) should be increased from 100 hours to 720 hours. Adopting Arkema's recommendation would substantially increase the compliance test burden without a demonstrated safety need. Arkema's recommendation may be based upon the specific performance of Arkema's brake tubing product as discussed below in further detail.

In its petition, Arkema included a graph of the elongation properties of polyamide (nylon) tubing that shows a substantial decrease in this elongation at approximately 40 days (960 hours) of exposure (a comparison material is mentioned but does not appear in the graph). The agency questions if this also translates into a corresponding decrease in burst strength, and whether plastic air brake tubing in service on motor vehicles experiences this level of degradation. Also, the agency does not know if the degradation of elongation would be mainly a function of exposure to ambient moisture in the atmosphere (as stated by Arkema) or to exposure to moisture contained within the air brake system. The data do not indicate whether the elongation degradation at 960 hours is accompanied by an increase in moisture weight gain or if such weight gain exceeds two percent.

The data provided by Arkema raises many questions. We also note that Arkema's proposed 720 hour conditioning is the time just prior to when the nylon tubing properties begin to substantially degrade, so it would appear the 720 hour value was selected to match the performance curve of this particular material. We further note that Arkema's test data shows a conditioning temperature of 212 degrees Fahrenheit, which is substantially higher than the 75 degree Fahrenheit conditioning temperature that is currently specified in FMVSS No. 106 and in SAE J844.

In reviewing Arkema's petition, the agency has once again reviewed its decision to not include the moisture weight gain portion from the SAE J844 requirements in the final rule. This requirement states that after the tubing is conditioned in the environmental chamber at 100 percent relative

humidity at room temperature for 100 hours, the weight of the tubing sample shall not increase by more than two percent. Such weight gain would be caused by the tubing sample absorbing moisture. In its petition, Arkema stated that some thermoplastics are very sensitive to moisture associated with temperature, leading to degradation of the material (hydrolysis). It stated that the material will get brittle and lose mechanical strength over time.

In the final rule, the agency stated that it did not have a basis for believing that a weight gain of more than two percent would constitute a safety problem. The agency instead included a burst strength test at the end of the test sequence as a check of the mechanical strength of the tubing after conditioning it in the humid environment.

We once again reviewed the comments submitted in response to the May 2003 NPRM and note that Saint-Gobain Performance Plastics objected to the weight gain limit as being designed around nylon and that using weight gain as a performance metric is not appropriate. DuPont did not object to having a weight gain limit but noted that several other tests proposed (and subsequently adopted in the final rule) would be satisfactory in evaluating the resistance of the tubing to degradation from moisture absorption.

Based upon all of the information we have at this time, the agency has again decided not to propose the adoption of a weight gain limit. Therefore, the part of Arkema's petition asking for an increase from 100 to 720 hours in tubing conditioning in a humid environmental chamber in paragraph (c) of S 12.6 moisture absorption and burst strength is denied.

Before undertaking further rulemaking on plastic air brake tubing moisture absorption and burst strength, we would ask for complete test data from Arkema or other manufacturers so that we may review the difference in weight gain for different materials of plastic air brake tubing subjected to both 100-hour and longer conditioning times. We need this information to determine how much moisture various types of tubing materials absorb, and if there is a correlation to a degradation of tubing mechanical properties such as burst strength.

V. Listing and Description of Corrections

In addition, the agency has noted typographical errors or omissions in the final rule of December 20, 2004. In this final rule document, we are making the following corrections:

1. S6.1.3 Calculation of expansion at 1,000 psi, 1,500 psi, and 2,900 psi for hydraulic brake hose. Paragraph (b) of this section incorrectly states that the pressure increase rate is 1,500 psi per minute. The correct rate of 15,000 psi per minute is being restored in this corrections notice.

2. Table III—Air brake hose dimensions. The minimum inside diameter for ¼ inch inside diameter, Type A air brake hose, is shown as 0.277 inches in Table III of the final rule. This is in error and the correct dimension is 0.227 inches, consistent with SAE J1402 (January 2005) Table 1.

3. S7.3 Test requirements for air brake hose. In the final rule, the second sentence of 7.3 states that in addition to the constriction requirements in S7.3.1, air brake hose is subject to the requirements in S7.3.2 through S7.3.14. This is incorrect because it should cite the requirements in S7.3.2 through S7.3.13.

4. S7.3.5 Ozone resistance for air brake hose. The test temperature is specified as 104 degrees Fahrenheit (49 degrees Celsius). The correct metric conversion for 104 degrees Fahrenheit is 40 degrees Celsius.

5. S8.7 Flex strength and air pressure test for air brake hose. This requirement includes a flex test apparatus figure with several specified dimensions. The table accompanying Figure 5 describes the dimensions of the test apparatus for various sizes of air brake hose. The ninth column specifies the ''C'' dimension of Position ''2'' of the test apparatus for a 7/16, ½, or ⅝ inside diameter hose and is shown as 5.00 inches (102 mm). The correct metric conversion for 5.00 inches is 127 mm. This correction is being made to the table accompanying Figure 5.

6. S8.12 End fitting corrosion resistance for air brake hose end fittings. This section states how to conduct the corrosion test in S6.9, using an air brake hose. However, in the final rule S6.9 was changed to incorporate a new dynamic ozone resistance test, and the corrosion test was moved to S6.11. The correct reference to the corrosion resistance test in S6.11 is made to S8.12 in this notice. This revision was inadvertently not included in the NPRM or final rule.

7. S9.1.2 End fittings for vacuum brake hose. The first sentence of this section states ''[e]xcept for an end fitting that is attached by heat striking or by interference fit * * *'' However, the agency notes that the word ''striking'' should be ''shrinking,'' consistent with similar text in S9.1.3. Heat shrinking is a process that may be used to assemble end fittings onto vacuum brake hose. This typographical error is corrected in this notice.

8. S9.2.1 Constriction test for vacuum brake hose and S10.10 corrosion resistance for vacuum brake hose. The citation at the end of S9.2.1 references the constriction test procedure as S10.10. In the December 2004 final rule, S10.10 is the constriction test, however, this conflicts with the existing S10.10 in FMVSS No. 106 that is the end fitting corrosion resistance test. Therefore, the constriction test in the December 2004 final rule is redesignated as S10.11, and the reference in S9.2.1 is changed to S10.11 as well.

We also revise S10.10, corrosion resistance test, to correct a revision that was omitted from the final rule. The reference in S10.10 to ''conduct the test specified in S6.9'' is changed to ''conduct the test specified in S6.11'' to reflect changes that were made in S6 in the December 2004 final rule.

9. S9.2.3 Low temperature resistance for vacuum brake hose. Paragraph (b) of this section references the hydrostatic pressure test as S10.6. This is incorrect, because the hydrostatic pressure test procedure is in S10.1(e). The correction is made in this notice.

10. S10.7 Swell and adhesion test for vacuum brake hose. Paragraph (c) of this section states that after soaking a vacuum brake hose in reference fuel, the constriction test in S10.10 is to be conducted. However, the reference for the constriction test is changed to S10.11 as described in item 8 above. This change is made in S10.7 as well.

11. S10.9 Deformation test for vacuum brake hose. S10.9 states that Table VI specifies the test specimen dimensions to be used for conducting the deformation test. However, the header of the second column in Table VI states ''Specimen dimensions (see fig. 4)'' is incorrect because Figure 4 was changed to Figure 7 in the December 2004 final rule. This revision to the header in Table VI is made in this final rule.

12. *S11.3 Test requirements for plastic air brake tubing.* The final rule states that in addition to the constriction requirements in S11.3.1, plastic air brake tubing is subject to the requirements in S11.3.2 through S11.3.22. This is incorrect. The correct citation is to the requirements of S11.3.2 through S11.3.24.

13. S12.6 Moisture absorption and burst strength for plastic air brake tubing. Paragraph (e) of this section has an equation to calculate the percentage moisture absorption, but a division symbol is missing from the text in the final rule. Paragraph (g) of this section

is missing the letter ''S'' in reference to S12.5. The corrections to both paragraphs (e) and (g) are made in this final rule.

14. S12.10 High temperature resistance test for plastic air brake tubing. The temperature specification for conditioning the tubing is 230 degrees Fahrenheit. The metric equivalent temperature of 110 degrees Celsius, missing from the text, is included in this final rule.

15. S12.15 High temperature conditioning and collapse resistance test for plastic air brake tubing. Paragraph (b)(4) of this section states to condition the holding device and brake hose in an air oven at 230 degrees Fahrenheit (110 degrees Celsius) for 24 hours. However, as stated in the test requirements in S11.3.14, the correct temperature specification is 200 degrees Fahrenheit (93 degrees Celsius).

Paragraph (c) of this of S12.15 includes an equation to calculate the percentage collapse of the outside diameter of the tubing. A division symbol missing from the text in the December 20, 2004 final rule is included in this final rule.

16. S12.17 Oil resistance test for plastic air brake tubing. Paragraph (b) of this section references ASTM 903 oil. The correct reference is ASTM IRM 903 oil.

17. S12.23 Thermal conditioning and end fitting retention test for plastic air brake tubing. Paragraph (a) of this section incorrectly references ASTM IBM 903 oil. The correct reference is ASTM IRM 903 oil.

VII. Effective Date

Because the changes in this final rule are minor ones on the order of correcting typographical errors and other inadvertent omissions in FMVSS No. 106, this final rule will take effect on December 21, 2007. This final rule corrects the final rule of December 20, 2004 (69 FR 76298), which will take effect on December 20, 2007 (See 71 FR 74823, December 13, 2006). Optional early compliance is permitted as of the date this document is published in the **Federal Register**.

VIII. Rulemaking Analyses and Notices

This rule makes technical corrections and has no impact on the regulatory burden of manufacturers. The agency discussed the relevant requirements of Executive Order 12866, the Department of Transportation's regulatory policies and procedures, the Regulatory Flexibility Act, the National Environmental Policy Act, Executive Order 13132 (Federalism), the Unfunded Mandates Act, Civil Justice Reform, the National Technology Transfer and Advancement Act, and the Paperwork Reduction Act in the December 2004 final rule cited above. Those discussions are not affected by these technical amendments.

Privacy Act

Please note that anyone is able to search the electronic form of all documents received into any of our dockets by the name of the individual submitting the document (or signing the document, if submitted on behalf of an association, business, labor union, etc.). You may review DOT's complete Privacy Act Statement in the **Federal Register** published on April 11, 2000 (Volume 65, Number 70; Pages 19477–78).

List of Subjects in 49 CFR Part 571

Imports, Incorporation by Reference, Motor vehicle safety, Motor vehicles, Rubber and rubber products, and Tires.

■ In consideration of the foregoing, NHTSA amends 49 CFR part 571 as follows:

PART 571—FEDERAL MOTOR VEHICLE SAFETY STANDARDS

■ 1. The authority for part 571 continues to read as follows:

Authority: 49 U.S.C. 322, 30111, 30115, 30117 and 30166; delegation of authority at 49 CFR 1.50.

■ 2. Section 571.106 is amended by:
■ a. Revising Table I;
■ b. Revising paragraph (b) of S6.1.3;
■ c. Revising Table III;
■ d. Revising in S7.3, the second sentence;
■ e. Revising S7.3.5;
■ f. Revising the Table Accompanying Figure 5, following S8.7.1;
■ g. Revising S8.12;
■ h. Revising in S9.1.2, the introductory text;
■ i. Revising S9.2.1;
■ j. Revising in S9.2.3, paragraph (b);
■ k. Revising in S10.7, paragraph (c);
■ l. Revising Table VI following S10.9.2(a);
■ m. Redesignating S10.10 as S10.11;
■ n. Adding new S10.10;
■ o. Revising in S11.3, the second sentence;
■ p. Revising in S12.6, paragraphs (e) and (g);
■ q. Revising in S12.10, the first sentence;
■ r. Revising in S12.15, paragraph (b)(4) and paragraph (c);
■ s. Revising in S12.17, in paragraph (b), the first sentence, and
■ t. Revising in S12.23, paragraph (a).

The additions and revisions read as follows:

§ 571.106 Standard No. 106; Brake hoses.

* * * * *

TABLE I.—MAXIMUM EXPANSION OF FREE LENGTH BRAKE HOSE, CC/FT

Hydraulic brake hose, inside diameter	Test pressure					
	1,000 psi		1,500 psi		2,900 psi	
	Regular expansion hose	Low expansion hose	Low expansion hose	Regular expansion hose	Regular expansion hose	Low expansion hose
1/8 inch, or 3mm, or less	0.66	0.33	0.79	0.42	1.21	0.61
> 1/8 inch or 3mm, to 3/16 inch or 5 mm	0.86	0.55	1.02	0.72	1.67	0.91
> 3/16 inch or 5 mm	1.04	0.82	1.30	1.17	*	*

* * * * *

S6.1.3 *Calculation of expansion at 1,000 psi, 1,500 psi, and 2,900 psi.*

* * * * *

(b) Close the valve to the burette, apply pressure at the rate of 15,000 psi per minute, and seal 1,000 psi in the hose (1,500 psi in the second series, and 2,900 psi in the third series).

* * * * *

TABLE III.—AIR BRAKE HOSE DIMENSIONS—INSIDE DIAMETER (ID) AND OUTSIDE DIAMETER (OD) DIMENSIONS IN INCHES (MILLIMETERS)

	Type A—Hose Size—Nominal Inside Diameter					
	1/4	5/16	3/8	7/16	1/2 SP (1)	5/8
Min. I.D.	0.227 (5.8)	0.289 (7.3)	0.352 (8.9)	0.407 (10.3)	0.469 (11.9)	0.594 (15.1)
Max. I.D.	0.273 (6.9)	0.335 (8.5)	0.398 (10.1)	0.469 (11.9)	0.531 (13.5)	0.656 (16.7)
Min. O.D.	0.594 (15.1)	0.656 (16.7)	0.719 (18.3)	0.781 (19.8)	0.844 (21.4)	1.031 (26.2)
Max. O.D.	0.656 (16.7)	0.719 (18.3)	0.781 (19.8)	0.843 (21.4)	0.906 (23.0)	1.094 (27.8)
	Type AI (2)—Hose Size—Nominal Inside Diameter					
	3/16	1/4	5/16	13/32	1/2	5/8
Min. I.D.	0.188 (4.8)	0.250 (6.4)	0.312 (7.9)	0.406 (10.3)	0.500 (12.7)	0.625 (15.9)
Max. I.D.	0.214 (5.4)	0.281 (7.1)	0.343 (8.7)	0.437 (11.1)	0.539 (13.7)	0.667 (16.9)
Min. O.D.	0.472 (12.0)	0.535 (13.6)	0.598 (15.1)	0.714 (18.1)	0.808 (20.5)	0.933 (23.7)
Max. O.D.	0.510 (13.0)	0.573 (14.6)	0.636 (16.2)	0.760 (19.3)	0.854 (21.7)	0.979 (24.9)
	Type AII (2)—Hose Size—Nominal Inside Diameter					
	3/16	1/4	5/16	13/32	1/2	5/8
Min. I.D.	0.188 (4.8)	0.250 (6.4)	0.312 (7.9)	0.406 (10.3)	0.500 (12.7)	0.625 (15.9)
Max. I.D.	0.214 (5.4)	0.281 (7.1)	0.343 (8.7)	0.437 (11.1)	0.539 (13.7)	0.667 (16.9)
Min. O.D.	0.500 (12.7)	0.562 (14.3)	0.656 (16.7)	0.742 (18.8)	0.898 (22.8)	1.054 (26.8)
Max. O.D.	0.539 (13.7)	0.602 (15.3)	0.695 (17.7)	0.789 (20.1)	0.945 (24.0)	1.101 (27.9)

(1) Notes: Type A, sizes 3/8, 7/16, and 1/2 Special can be assembled with reusable end fittings. All sizes can be assembled using permanently-attached (crimped) end fittings.
(2) Types AI and AII, all sizes, can be assembled with reusable or permanently-attached (crimped) end fittings.

* * * * *

S7.3 *Test requirements.* * * * However, a particular hose assembly or appropriate part thereof need not meet further requirements after having met the constriction requirement (S7.3.1) and then having been subjected to any one of the requirements specified in S7.3.2 through S7.3.13.

* * * * *

S7.3.5 *Ozone resistance.* An air brake hose assembly shall not show cracks visible under 7-power magnification after exposure to ozone for 70 hours at 104 degrees Fahrenheit (40 degrees Celsius) when bent around a test cylinder of the radius specified in Table IV for the size of hose tested (S8.4).

* * * * *

TABLE ACCOMPANYING FIGURE 5.—DIMENSIONS IN INCHES (MILLIMETERS)

Free hose length	Nominal hose inside diameter	Dimensions							
		Position "1"				Position "2"			
		A	B	C	R(1)	A	B	C	R(1)
10.00 (254)	3/16, 1/4	3.00 (76)	2.75 (70)	3.75 (95)	1.40 (34)	3.00 (76)	2.75 (70)	3.75 (95)	1.20 (30)
11.00 (279)	5/16, 3/8, 13/32	3.00 (76)	3.50 (89)	4.50 (114)	1.70 (43)	3.00 (76)	3.50 (89)	4.50 (114)	1.30 (33)
14.00 (355)	7/16, 1/2, 5/8	3.00 (76)	4.00 (102)	5.00 (127)	2.20 (56)	3.00 (76)	4.00 (102)	5.00 (127)	1.80 (46)

Note (1): This is an approximate average radius.

* * * * *

S8.12 *End fitting corrosion resistance test.* Conduct the test specified in S6.11 using an air brake hose assembly.

* * * * *

S9.1.2 *End fittings.* Except for an end fitting that is attached by heat shrinking or by interference fit with

plastic vacuum hose or that is attached by deformation of the fitting about a hose by crimping or swaging, at least one component of each vacuum brake hose fitting shall be etched, embossed, or stamped in block capital letters and numerals at least one-sixteenth of an inch high with the following information:

* * * * *

S9.2.1 *Constriction.* Except for that part of an end fitting which does not contain hose, every inside diameter of any section of a vacuum brake hose assembly shall not be less than 75 percent of the nominal inside diameter of the hose if for heavy duty, or 70 percent of the nominal inside diameter of the hose if for light duty (S10.11).

* * * * *

S9.2.3 Low temperature resistance. * * *

* * * * *

(b) Not leak when subjected to a hydrostatic pressure test (S10.1(e)).

* * * * *

S10.7 *Swell and adhesion test.*

* * * * *

(c) Remove fuel and conduct the constriction test in S10.11.

* * * * *

TABLE VI.—DIMENSIONS OF TEST SPECIMEN AND FEELER GAGE FOR DEFORMATION TEST

Hose inside diameter*		Specimen dimensions (see Fig. 7)		Feeler gage dimensions	
in.	mm	Depth (inch)	Length (inch)	Width (inch)	Thickness (inch)
7/32	5	3/64	1	1/8	3/64
1/4	6	1/16	1	1/8	1/16
9/32	.....	1/16	1	1/8	1/16
11/32	8	5/64	1	3/16	5/64
3/8	10	3/32	1	3/16	3/32
7/16	.....	5/64	1	1/4	5/64
15/32	.....	5/64	1	1/4	5/64
1/2	12	1/8	1	1/4	1/8
5/8	16	5/32	1	1/4	5/32
3/4	.....	3/16	1	1/4	3/16
1	.....	1/4	1	1/4	1/4

*These sizes are listed to provide test values for brake hoses manufactured in these sizes. They do not represent conversions.

* * * * *

S10.10 *End fitting corrosion resistance test.* Conduct the test specified in S6.11 using a vacuum brake hose assembly.

* * * * *

S11.3 *Test requirements.* * * * However, a particular tubing assembly or appropriate part thereof need not meet further requirements after having met the constriction requirement (S11.3.1) and then having been subjected to any one of the requirements specified in S11.3.2 through S11.3.24. * * *

* * * * *

S12.6 *Moisture absorption and burst strength.*

* * * * *

(e) Calculate percentage of moisture absorption as follows:

([Conditioned Weight—Initial Weight] ÷ [Initial Weight]) × 100

* * * * *

(g) Conduct the burst strength test in S12.5 except use 80 percent of the burst strength pressure for the size of tubing being tested as specified in Table VIII.

* * * * *

S12.10 *High temperature resistance test.* Condition the tubing in an air oven at 230 degrees Fahrenheit (110 degrees Celsius) for 72 hours. * * *

* * * * *

S12.15 *High temperature conditioning and collapse resistance test.*

* * * * *

(b) *Preparation.*

* * * * *

(4) Condition the holding device and tubing in an air oven at 200 degrees Fahrenheit (93 degrees Celsius) for 24 hours. Remove the holding device and tubing and allow to cool at room temperature for thirty minutes.

* * * * *

(c) *Calculation.* Calculate the percentage collapse of the outside diameter of the tubing as follows: ([Initial Outside Diameter—Final Outside Diameter] ÷ [Initial Outside Diameter]) × 100

* * * * *

S12.17 *Oil resistance test.*

(b) Immerse the tubing in ASTM IRM 903 oil at 212 degrees Fahrenheit (100 degrees Celsius) for 70 hours. * * *

* * * * *

S12.23 *Thermal conditioning and end fitting retention test.* (a) *Apparatus.* A source of hydraulic pressure that includes a pressure gauge or monitoring system, uses ASTM IRM 903 oil, and is constructed so that an air brake tubing assembly mounted to it can be conditioned in an environmental test chamber.

* * * * *

Issued on: September 27, 2007.

Nicole R. Nason,

Administrator.

[FR Doc. E7–19467 Filed 10–5–07; 8:45 am]

BILLING CODE 4910–59–P

DEPARTMENT OF TRANSPORTATION

National Highway Traffic Safety Administration

49 CFR Part 571

[Docket No. NHTSA–2007–29348]

RIN 2127–AK01

Federal Motor Vehicle Safety Standards; Brake Hoses

AGENCY: National Highway Traffic Safety Administration (NHTSA), Department of Transportation (DOT).

ACTION: Notice of proposed rulemaking (NPRM).

SUMMARY: This document, together with a companion final rule; technical amendments; response to petitions; published in today's edition of the **Federal Register**, addresses issues raised in petitions received in response to a December 2004 final rule that updated the Federal motor vehicle safety standard on brake hoses, and a related petition for rulemaking. In that rule, we incorporated updated versions of substantive specifications of several Society of Automotive Engineers (SAE) Recommended Practices relating to hydraulic brake hoses, vacuum brake hoses, air brake hoses, plastic air brake tubing, and end fittings.

In this NPRM, we respond to some issues raised in the petitions and propose a number of amendments to the brake hose rule in response to the petitions.

In the companion document, we deny several of the petitions and also correct typographical errors in, and inadvertent omissions from, the December 20, 2004 final rule.

DATES: Comments must be received on or before December 10, 2007.

ADDRESSES: Comments should refer to the docket number above and be submitted to:

- *Mail:* Docket Management Facility, M–30, U.S. Department of Transportation, West Building, Ground Floor, Rm. W12–140, 1200 New Jersey Avenue, SE., Washington, DC 20590.
- *Hand Delivery:* Documents may be submitted by hand delivery or courier to: Docket Management Facility, West Building, Ground Floor, Rm. W12–140, 1200 New Jersey Avenue, SE., Washington, DC between 9 a.m. and 5 p.m., except for Federal holidays.
- *Fax:* Faxed submissions are accepted at: 202–493–2251.
- *Online:* Alternatively, you may submit your comments electronically by logging onto the Federal Docket Management System (FDMS) Web site at *http://www.regulations.gov*. Follow the online instructions for submitting comments.

Regardless of how you submit your comments, you should mention the docket number of this document.

You may call the Docket at 202–366–9324. Docket hours are 9 a.m. to 5 p.m., Monday through Friday, except for Federal holidays.

Please see the Privacy Act heading under Rulemaking Analyses and Notices.

FOR FURTHER INFORMATION CONTACT:

For non-legal issues, Mr. Jeff Woods, Vehicle Dynamics Division, Office of Vehicle Safety Standards (Telephone: 202–366–6206) (Fax: 202–366–4921). Mr. Woods' mailing address is National Highway Traffic Safety Administration, NVS–122, 1200 New Jersey Avenue, SE., Washington, DC 20590.

For legal issues, Ms. Dorothy Nakama, Office of the Chief Counsel (Telephone: 202–366–2992) (Fax: 202–366–3820). Ms. Nakama's mailing address is National Highway Traffic Safety Administration, NCC–112, 1200 New Jersey Avenue, SE., Washington, DC 20590.

SUPPLEMENTARY INFORMATION:

Table of Contents

I. Background
II. December 20, 2004 Final Rule
III. Petitions
IV. Proposed Revisions to FMVSS No. 106
A. Hydraulic Brake Hoses
1. Compatibility Fluid
B. Air Brake Hoses
1. Overview of Petitions
2. Air Brake Hose Dimensions
3. Type AIII Dimensions for Air Brake Hose- Gates Petition
4. Metric Sizes of Air Brake Hoses
5. High Temperature Resistance
C. Vacuum Brake Hoses
1. Overview of Petitions
2. High Temperature Resistance
3. Deformation
4. Table V
D. Plastic Air Brake Tubing
1. Overview of Petitions
2. Plastic Air Brake Tubing Dimensions
3. Notations to Table VII
4. Plastic Air Brake Tubing Mechanical Properties
5. Impact Test Apparatus
6. Resistance to Corrosive Salt Compounds
7. Resistance to Methyl Alcohol
V. Rulemaking Analyses and Notices
A. Executive Order 12866 and DOT Regulatory Policies and Procedures
B. Regulatory Flexibility Act
C. National Environmental Policy Act
D. Executive Order 13132 (Federalism)
E. Civil Justice Reform
F. Paperwork Reduction Act
G. National Technology Transfer and Advancement Act
H. Unfunded Mandates Reform Act
I. Plain Language
J. Regulation Identifier Number
K. Privacy Act
L. Comments

I. Background

On October 30, 1998, a joint petition for rulemaking was filed by Elf Atochem North America, Inc., Mark IV Industrial/Dayco Eastman, and Parker Hannifin Corporation, three brake hose manufacturers. The petitioners petitioned for certain requirements relating to brake hoses, brake hose tubing, and brake hose end fittings administered by the Federal Motor Carrier Safety Administration (FMCSA) to be incorporated into the brake hose standard that is currently administered by the National Highway Traffic Safety Administration (''NHTSA'' or the ''agency''). Specifically, the petitioners sought incorporation of the requirements in section 393.45 (Brake tubing and hose, adequacy) and section 393.46 (Brake tubing and hose connections) of the Federal Motor Carrier Safety Regulations (FMCSR) into section 571.106 (Brake hoses) of the Federal motor vehicle safety standards (''FMVSS''). The petition requested that the application of these SAE specifications be limited to hose, tubing, and fittings used on trucks, truck-trailer combinations, and buses with either a GVWR greater than 10,000 lbs. or which are designed to transport 16 or more people, including the driver. In addition, the petitioners requested that the current versions of the SAE specifications be adopted instead of the older versions cited in the FMCSRs.

NHTSA granted the joint petition for rulemaking, and published a notice of proposed rulemaking on May 15, 2003 (68 FR 26384, DOT Docket No. 03–14483). The agency agreed with the petitioners that there was a safety need to transfer the brake hose, tubing, and fitting requirements currently contained in sections 393.45 and 393.46 of the FMCSRs to FMVSS No. 106, before those requirements are deleted. NHTSA tentatively concluded that to ensure the continued safety of commercial motor vehicle braking systems, the substantive specifications of the SAE Recommended Practices should be incorporated into FMVSS No. 106, with a few exceptions as noted. This would involve, among other changes, establishing a new category in the standard for plastic air brake tubing, end fittings, and tubing assemblies.

NHTSA's decision to grant the joint petition was also based on the fact that FMVSS No. 106 has not been substantially updated in many years. Revisions over the past 20 years primarily addressed labeling issues,

inclusion of metric-sized brake hoses, updating test fluids to match advances in industry, and minor regulatory revisions to individual test conditions such as the whip test and the adhesion test. We noted that most of the substantive requirements in Standard 106, other than the labeling requirements, were originally based on SAE standards and American Society for Testing and Materials (ASTM) standards referenced therein. While the SAE and ASTM standards have been modified over time to keep pace with technological developments in the industry, the substantive requirements of FMVSS No. 106 have remained relatively unchanged. NHTSA's proposed changes to Standard No. 106 would take into account the substantial technological developments that have occurred and align the standard's requirements with standard industry practices. Incorporating many of the SAE standard's performance requirements is consistent with Office of Management and Budget (OMB) Circular A–119, which directs federal agencies to use and/or develop voluntary consensus industry standards, in accordance with Public Law 104–113, the ''National Technology Transfer and Advancement Act of 1995.''

II. December 2004 Final Rule

On December 20, 2004 (69 FR 76298, DOT Docket No. NHTSA–2003–14483), NHTSA published a final rule amending the brake hose standard. The agency's rule differed in the following respects from that petitioned for by the petitioners—

First, instead of simply incorporating complete SAE standards by reference as the FMCSRs currently do, NHTSA incorporated only the specific requirements/specifications of the SAE standards that are either more rigorous than those in Standard No. 106 or are not present at all in FMVSS No. 106.

Second, the agency did not limit the application of those SAE requirements/specifications to brake hose, tubing, and fittings used on commercial motor vehicles. NHTSA determined that all brake hose, tubing, and fittings can and should meet the requirements/specifications, regardless of their end use.

Third, although NHTSA agreed with the petitioners that changes to FMVSS No. 106 should be based on the most recent versions of the SAE standards, instead of the older versions cited in the FMCSRs, the agency noted that a number of SAE's standards have been updated since the joint petition was filed (in 1998). Accordingly, NHTSA relied on what it believed to be the most recent versions of the SAE standards.

Fourth, the agency did not incorporate SAE standards relating to copper tubing, galvanized steel pipe, or end fittings used with metallic or non-metallic tubing, materials that are occasionally used in chassis plumbing. Since these products are not considered to be brake hoses, NHTSA determined them not to be appropriate to include in FMVSS No. 106, a brake hose standard.

Fifth, NHTSA did not incorporate the material and construction specifications for Type A and Type B tubing contained in SAE J844, *Nonmetallic Air Brake System Tubing*, and SAE J1394, *Metric Nonmetallic Air Brake System Tubing* because the agency tentatively concluded that incorporating those material specifications would be design-restrictive.

Sixth, NHTSA did not incorporate the manufacturer identification requirements in SAE J1401, *Hydraulic Brake Hose Assemblies for Use with Nonpetroleum-Base Hydraulic Fluids*, because it concluded that the manufacturer identification requirements already present in FMVSS No. 106 are sufficient.

III. Petitions

In early 2005, NHTSA received petitions for reconsideration of the December 20, 2004 final rule from Cooper Standard Automotive (Fluid Division), Degussa Corporation, George Apgar Consulting, MPC, Inc., and Parker Hannifin Corporation (with separate comments from its Brass Division and from its Hose Products Division). In July 2005, Arkema, Inc., submitted a document styled as a petition for reconsideration. NHTSA is treating the document as a petition for rulemaking instead since its regulations (49 CFR 553.35(a)) provide that a document styled as a petition for reconsideration of a final rule and received by the agency more than 45 days after the issuance of that final rule will be treated as a petition for rulemaking. The petitions addressed a wide range of FMVSS No. 106 subjects.

We are addressing a number of the petitions by proposing amendments to FMVSS No. 106 in this NPRM. In a companion document published in today's edition of the **Federal Register**, we are addressing other issues raised in the petitions and in some instances, are denying the petitions. In some cases, in this NPRM, we are proposing changes based on suggestions or petitions, but which deviate from the requested changes. Thus, several petitions are partially granted in this respect.

IV. Proposed Revisions to FMVSS No. 106

A. Hydraulic Brake Hoses

1. Compatibility Fluid—In the final rule, the agency adopted a revised SAE compatibility brake fluid, RM–66–04, incorporated by reference in FMVSS No. 106, S5.3.9, Brake Fluid Compatibility, Constriction, and Burst Strength test requirements. Since the publication of the December 2004 final rule, we have discovered that SAE J1703 was revised in April 2004. Appendix B of SAE J1703 (April 2004) references a new compatibility brake fluid, RM–66–05. In this NPRM, we propose to incorporate the reference to the current version of SAE compatibility brake fluid, RM–66–05.

We have checked the SAE Web site (*http://www.sae.org*) for information on the availability of the RM–66–05 compatibility brake fluid, since we have been made aware by SAE that it would no longer be selling this referee material. However, as indicated on the SAE website, the compatibility brake fluid is now available for purchase from Greening Associates, Inc. in Detroit, Michigan. As long as SAE continues to identify the supplier of the compatibility brake fluid, NHTSA sees no need to provide this information in FMVSS No. 106. Therefore, we are not proposing to identify the supplier in this notice. We welcome comments on this issue.

B. Air Brake Hoses

1. Overview of Petitions—In response to the agency's final rule, there was one petition received on air brake hose from Parker Hannifin, Hose Products Division. Parker provided suggestions for changes to the construction and labeling information provided in Table III of FMVSS No. 106. Parker also petitioned for changes to the high temperature resistance test for air brake hose. We also address a petition for rulemaking from Gates Corporation that requests adding Type AIII air brake hose to Table III. All these issues are discussed in further detail below.

2. Air Brake Hose Dimensions—Parker stated in its petition that the footnotes for Table III in FMVSS No. 106 should indicate that all types of air brake hose (Type A, AI, and AII) can be used with either reusable or permanently attached end fittings, and that fittings types are not interchangeable with hose types due to differences in outside diameters of Type A, AI, and AII hose. In addition, in this NPRM, we address a petition for rulemaking from Gates Corporation that asks that we add Type AIII air brake hose to Table III. Gates also petitioned

for a change in the applicability so that Table III applies only to air brake hoses for use with reusable end fittings. As is addressed in more detail below, in response to the Gates petition, we propose that Table III be revised so that it applies to air brake hoses only for use with reusable end fittings, meaning that there would no longer be a need for the table's footnotes. Therefore, in this notice we are not proposing any changes to the footnotes as requested by Parker. Instead, we are proposing to remove all of the footnotes from Table III.

3. Type AIII Dimensions for Air Brake Hose—Gates' Petition for Rulemaking—In a submission dated November 22, 2005, Gates Corporation (Gates) petitioned NHTSA to amend the December 20, 2004 version of FMVSS No. 106. In particular, Gates asked us to amend S7.1 *Construction* for the following reason:

> The revised wording now places dimensional limits, that were not present in the previous version, on hoses manufactured for use with permanently attached brake hose end fittings only. Gates Corporation manufactures such hoses and this new ruling would exclude Gates Corporation from providing air brake assemblies which it currently supplies under FMVSS 106. These current air brake assemblies meet all the performance requirements of the current version of FMVSS 106 and will continue to meet the performance requirements set forth in the above listed final ruling [referring to FMVSS No. 106 in the October 1, 2000 edition of Title 49 of the Code of Federal Regulations, Parts 400 to 599].

Gates petitioned to amend FMVSS No. 106 as follows: First, to amend S7.1, *Construction*, by reverting to the regulatory text that exists now (before the December 20, 2004 final rule text takes effect) so that Table III, that specifies dimensional requirements for air brake hoses, only applies to air brake hoses that are assembled with reusable end fittings. Second, Gates asked that the statement ''except for brake hose manufactured in metric sizes'' (having the effect that metric sizes of brake hose for use with reusable fittings could be sold without meeting any dimensional requirements specified in FMVSS No. 106) be added.

Third, Gates petitioned to add Type AIII dimensions for air brake hose to Table III in FMVSS No. 106. Table III already includes dimensions for Type A, Type AI, and Type AII air brake hoses. According to its petition, Gates manufactures Type AIII, an air brake hose used only with permanently attached end fittings.

The agency has reviewed Gates' petition and has decided to grant it for the following reasons. We have determined that amending S7.1 in the way Gates has petitioned for would mean, as was the case prior to the agency's December 20, 2004 final rule, that the Table III designations would apply only to air brake hoses that are assembled with reusable end fittings. Although Gates did not indicate why it wants Type AIII added to Table III when Gates has no stated intention of using this hose with reusable end fittings, the agency believes that adding the Type AIII designation would not be problematic or adversely affect safety.

The agency believes that it may not be as critical to specify dimensions for air brake hoses that are only assembled with permanently attached end fittings, because specialized equipment is needed to produce such brake hose assemblies. Many of the assemblers doing this work on a repair basis (as evidenced by the agency's listing of registered brake hose assemblers) are small businesses that purchase or use a complete system of compatible end fittings, brake hoses, and crimping or swaging equipment for a particular brand of brake hoses. Thus the agency believes that it is not likely for an assembler with specialized knowledge and equipment to mix improper components when assembling air brake hoses with permanently attached end fittings, compared to a person making field repairs to an air brake hose with reusable end fittings that do not require specialized equipment to disassemble and reassemble the end fittings.

4. Metric Sizes of Air Brake Hoses—In the final rule of December 20, 2004, Table III specifies hose sizes only in English units of measurement (i.e., 3/16 inch, 1/4 inch, 5/16 inch). In contrast, metric measurements are metric units expressed in whole millimeters such as 5 millimeters or 8 millimeters.[1] In the December 20, 2004 final rule, at page 76,303, NHTSA addressed the issue of specifying metric measurements for air brake hoses:

> Regarding metric sizes of air brake hose, in the NPRM, NHTSA noted that dimensions for metric air brake hoses are not included in FMVSS No. 106, and solicited comments on the dimensions for metric air brake hose (for use with permanently attached, or reusable end fittings) that may be appropriate to include in FMVSS No. 106. Since it received no comments on this subject, NHTSA will not include metric air brake hoses in Table III.

In order to assure standardization and compatibility of the hose and end fittings and to ensure the safety of replacement brake hoses used with existing end fittings, in this NPRM, the agency proposes, for air brake hoses in metric measurements, to permit air brake hoses with permanently attached end fittings only. Therefore, the agency does not propose to change the regulatory text in S7.1 as requested by Gates to exclude metric brake hoses for use with reusable end fittings from having dimensional requirements specified in Table III. Metric air brake hoses would still be permitted to be assembled and sold with permanently attached end fittings under this proposal. This issue is ambiguous under the regulatory text of the December 20, 2004 final rule because metric air brake hoses are referred to in the labeling requirements of S7.2 (without specifying whether the metric air brake hoses are those with permanently-attached or reusable end fittings), while every air brake hose was required to meet the dimensional requirements in Table III and no ''metric measurement'' sizes were included in that table.

This NPRM seeks to resolve the ambiguity by proposing to specify metric air brake hose for use only with permanently attached end fittings. As explained above, we believe that it may not be as critical to specify dimensions for air brake hoses that are only assembled with permanently-attached end fittings, because specialized equipment is needed to produce such brake hose assemblies. Therefore, before a manufacturer may manufacture or sell new metric air brake hose for use with reusable end fittings, the metric hose dimensions must first be added to Table III in FMVSS No. 106 through the agency's rulemaking process.

We agree that it would be appropriate to propose adding Type AIII air brake hoses to Table III in FMVSS No. 106 as requested by Gates. In its petition, Gates stated that it had initiated a project with the SAE to have Type AIII air brake hose added to the dimensional tables in recommended practice SAE J1402, *Automotive Air Brake Hose and Hose Assemblies*. However, since amended SAE J1402 has not yet been issued by the SAE, NHTSA has decided not to wait for issuance of an amended J1402, and then propose to incorporate by reference the amended J1402 into FMVSS No. 106. In this NPRM, we propose to include in FMVSS No. 106, the Type AIII air brake hose dimensions from the draft J1402 document.

By proposing to include the Type AIII designation for brake hose in Table III, NHTSA is not proposing to require that the hoses be assembled with reusable fittings. However, to meet Gates' petition for their hose designation to be

[1] NHTSA does not consider the inside diameter and outside diameter conversions of English units into metric measurements (resulting in numbers such as 5.8 millimeters or 16.7 millimeters) to be ''metric-sized air brake hose.''

added to FMVSS No. 106, S7.1 would need additional language so that if a hose is manufactured to the specifications in Table III it must be labeled as such. The agency is proposing that language in this notice at S7.2.1(e).

We also reviewed the footnotes of various revisions of J1402 and found that while Type AI and AII hoses could be installed with either permanently attached end fittings or reusable end fittings, only three sizes of Type A hose (3/8 inch, 7/16 inch, and 1/2 SP (''special'') inch) are designated in J1402 for use with reusable end fittings, and the remaining three sizes (1/4 inch, 5/16 inch, and 5/8 inch) are designated for use with permanently attached end fittings only. NHTSA's proposal, if made final, would eliminate the need for footnotes, since various types of hoses can be included in Table III regardless of whether they are used with reusable or permanently attached end fittings.

We therefore propose to remove all footnotes to Table III. These footnotes were added in the December 20, 2004 brake hose final rule to identify brake hoses that can be used with reusable and/or permanently attached end fittings. With the proposed revision of S7.1 and S7.2.1(e), the footnotes would no longer serve any purpose. In addition, NHTSA proposes that any one of the designations of brake hoses proposed for Table III, as well as hose types that are not listed in Table III, be permitted to be assembled with permanently-attached end fittings.

Public comment is sought on whether the proposed Type AIII designated hoses should be applicable both to hoses with permanently-attached end fittings and to hoses with reusable end fittings.

5. High Temperature Resistance—In its rulemaking to update FMVSS No. 106, the agency adopted the substantive requirements of SAE J1402, *Automotive Air Brake Hose and Hose Assemblies*, June 1985, into FMVSS No. 106. Revisions in the final rule included modification of the FMVSS No. 106 requirements in S7.3.2, High temperature resistance test, in which an air brake hose is secured around a test cylinder and conditioned at 100 degrees Celsius (212 degrees Fahrenheit) for 70 hours. After this conditioning, the hose is cooled and examined on the inside and outside for cracks, charring, or disintegration. In the final rule, the test cylinder specification was revised to include smaller test cylinders for each size of air brake hose that are specified in SAE J1402 (June 1985).

Parker's comment submitted in response to the final rule stated that SAE J1402 was in the process of being revised to change the dimensions of the test cylinders for the high temperature resistance test, and requested that the agency now consider adopting the new sizes of test cylinders in FMVSS No. 106. The agency has reviewed the revised standard, SAE J1402, *Automotive Air Brake Hose and Hose Assemblies* (January 2005), and finds that it includes revisions to the test cylinders for the high temperature test. The sizes of the high temperature test cylinders were increased to be the same size as the test cylinders used for other tests in SAE J1402, including the low temperature resistance test, ozone resistance test, and the adhesion test for air brake hose reinforced by wire.

The agency proposes that the latest requirements for the size of the test cylinders for the high temperature test as stated in SAE J1402 (January 2005) be adopted in FMVSS No. 106 as well. The stringency of the high temperature resistance test would be reduced slightly, due to larger test cylinders being used, but this would also result in only one size of test cylinders being needed for all of the test requirements for air brake hose in FMVSS No. 106 where the use of test cylinders is required, and in addition, FMVSS No. 106 would be aligned with the latest revision of SAE J1402. The net effect of this proposed change is that the test cylinder dimensions for the high temperature resistance test would be changed back to their original values (prior to the agency's extensive recent rulemaking on brake hoses) that were in effect for many years.

C. Vacuum Brake Hose

1. Overview of Petitions—In the May 15, 2003 NPRM to amend FMVSS No. 106, the agency indicated that it was aware that plastic vacuum brake tubing is being used in automotive applications as an alternative material to rubber vacuum brake hose (68 FR 26397). The agency stated that it was not aware of SAE or other industry standards for plastic vacuum tubing, but that if a suitable industry standard were developed, we would consider adopting performance requirements from that standard into FMVSS No. 106. In response to the final rule, Degussa, Cooper, and MPC have petitioned for changes to the requirements in FMVSS No. 106 for vacuum brake hose constructed of plastic. The requirements in FMVSS No. 106 at issue are S9.2.2, High temperature resistance, and S9.2.9, Deformation.

Degussa stated that there are no industry standards for plastic vacuum brake tubing and believes that it is not feasible to create a complete separate set of requirements for plastic vacuum brake tubing within FMVSS No. 106. However, it and other petitioners submitted two proposed changes specific to plastic vacuum brake tubing that could be incorporated within the S9 and S10 requirements for vacuum brake tubing in FMVSS No. 106.

MPC, Degussa, and Cooper provided the view that plastic vacuum brake tubing has advantages over rubber vacuum brake hose in certain automotive applications, including recyclability, smaller packaging size, lighter weight, improved abrasion and leak resistance, and ease of assembly. Cooper stated that the majority of European automakers that import motor vehicles into the United States use plastic vacuum brake tubing, and that this product has been used in Europe for more than a decade.

MPC stated that it could not locate Table V or Table VI in the final rule or in the agency's compliance test procedure. The agency notes that since these tables were not revised in the brake hose rulemaking, they did not appear in the final rule, but they are included in FMVSS No. 106 (49 CFR 571.106). However, as discussed below, the agency is now considering revisions to Table V and the proposed revisions to the table are included in this notice.

2. High Temperature Resistance—The requirements in S9.2.2 and S10.1 of FMVSS No. 106 include conditioning the hose at an elevated temperature of 257 degrees Fahrenheit (125 degrees Celsius) under an internal vacuum of 26 inches of mercury for 96 hours. Upon completion of that conditioning, the collapse of the outside diameter shall not exceed 10 percent for a heavy-duty vacuum brake hose or 15 percent for a light duty vacuum brake hose. Next, the hose is cooled to room temperature and bent around a mandrel with a diameter equal to five times the initial outside diameter of the hose. Upon inspection, while still bent around the mandrel, the hose must not exhibit any indications of cracks, charring, or disintegration. Finally, the hose is removed from the mandrel and subjected to a 175 psi hydrostatic burst test for one minute with no leakage permitted.

MPC stated that plastic tubing is more rigid than rubber hose and they have a concern that the tubing may kink when bent around the mandrel. The kinking can cause stress marks on the outside of the tubing, and although these marks are not associated with mechanical failure of the tubing, the marks could be interpreted as cracks resulting in failure of the test. MPC states that a typical 12.7 mm outside diameter tube will kink at

mandrel diameters below 100 mm (or approximately 8 times the outside diameter of the tube). MPC recommends that the mandrel size be increased to a diameter in excess of 8 times the outside diameter of the plastic tube.

The agency agrees that vacuum tubing manufactured from plastic typically is less flexible than a vacuum hose constructed of rubber and therefore a larger mandrel should be considered for this test requirement. The agency is proposing that the mandrel diameter be changed to eight times the outside diameter of the tubing if the tubing is constructed of plastic.

3. Deformation—The vacuum brake hose deformation requirements are specified in S9.2.10 of FMVSS No. 106, and the deformation test procedure is specified in S10.9. In this performance test, a one-inch long sample of vacuum brake hose is compressed so that the inside diameter is flattened to a specified value, and then the compressive force is released. This is repeated four more times, and upon completion of the compression test sequence the inside diameter of the vacuum brake hose shall be at least 90 percent of its original inside diameter, or, in the case of a vacuum brake hose reinforced with wire, it shall return to at least 85 percent of its original diameter. The compressive force application for a heavy-duty vacuum brake hose shall not exceed 70 pounds in the first compressive cycle, and shall be at least 40 pounds in the fifth compressive cycle. The compressive force application for a light-duty vacuum brake hose shall not exceed 50 pounds in the first compressive cycle, and shall be at least 20 pounds in the fifth compressive cycle.

In summary, this performance test requires that the hose has at least a minimum amount of flexibility (specified through an upper limit of compressive force application) and shape recovery so it returns nearly to its original shape after several applications of compressive force.

Degussa stated that the deformation requirements as currently included in FMVSS No. 106 would, in effect, prohibit the use of plastic tubing. It stated that the high shape recovery requirements and low compression force are typical for elastomers but that plastics are typically stronger and cannot meet these requirements. Degussa recommended either removing these requirements from FMVSS No. 106, or changing the post-compression recovery criteria to 60 percent of original outside diameter with a first compression force of less than 500 pounds.

Cooper cited similar reasons to exclude plastic tubing from the deformation requirements or to adopt an alternative requirement of a post-compression recovery of 60 percent of original outside diameter with a first compressive application force of no more than 500 pounds. Cooper stated that plastic tubing is constructed of a stronger material than that of elastomeric hose and that the stronger plastic tubing does not deform as easily under the low compressive forces in the deformation test.

MPC stated similar concerns. It stated that the thermoplastic tubes will not compress with loads as low as 70 pounds and will not have the shape recovery of an elastomeric hose, and that it would take a significantly higher amount of force to compress the plastic tubing. MPC recommended that the deformation test be eliminated for plastic tubing, or as an alternative, that if no deformation occurs at a compressive force of 70 pounds for a sample of tubing one inch in length, then the tubing would meet the deformation requirement.

The agency agrees that plastic vacuum brake tubing has properties that are substantially different than those of an elastomeric (rubber) vacuum brake hose. Principal among these differences is the increased stiffness of the plastic tubing that would not result in substantial collapse upon application of compressive forces in the 20 to 70-pound range for a test sample that is one inch in length (the specified sample length for all diameters of brake hose in Table VI).

After consideration of the suggested alternatives for plastic vacuum brake hose, the agency has decided to propose that a compressive force of 70 pounds be applied to the hose for five cycles, and that the recovery shall be at least 90 percent of the original outside diameter. This approach keeps the test parameters within the original specifications of the deformation test, and recognizes the increased mechanical strength of the plastic hose.

The agency also proposes to modify Table V to accommodate the proposed deformation test. The agency proposes to remove the ninth column of Table V that specifies the collapsed hose inside dimension for the deformation test, because these dimensions are redundant with the same dimensions in column six of Table VI. The agency prefers to have these specifications included in only one table where it is most relevant, which the agency proposes to be Table VI.

4. Table V—In addition, the agency notes that Table V—Vacuum Brake Hose Test Requirements, was not revised in the recent brake hose rulemaking to be consistent with the high temperature resistance requirements in the final rule. The third and fourth columns of the table indicate hose test sample length and test cylinder radius, respectively, for the high temperature resistance test. However, since the test cylinder radius or diameter was changed to a specification as a multiple of the vacuum brake hose initial outside diameter (five times the outside diameter of the brake hose), column four of Table V should be deleted.

The agency also notes that the length of the test sample of brake hose in column three of Table V deviates from SAE J1403 Vacuum Brake Hose (July 1989) which indicates that a 300 mm (11.8 inch) length of vacuum brake hose is used in this test. Therefore, the agency proposes to revise S10.1 to specify the length of the brake hose test sample as specified in SAE J1403, and remove column three from Table V. However, considering that the agency is also proposing a larger test cylinder radius for plastic vacuum brake tubing, a longer length of hose specimen would be needed for plastic hoses. Therefore, the agency proposes that test samples of plastic vacuum brake tubing be 450 mm (17.7 inches) in length.

D. Plastic Air Brake Tubing

1. Overview of Petitions—The agency received four petitions regarding plastic air brake tubing in response to the final rule. NHTSA also received a letter dated June 19, 2007 from Philatron International, asking for changes in plastic air brake tubing requirements. Because the letter was not submitted in time to be considered a petition for reconsideration, NHTSA will consider Philatron's letter to be a petition for rulemaking.

Each of the organizations petitioning for reconsideration (Degussa, Parker Brass Division, Apgar, and Arkema) stated that because the agency did not include a requirement that plastic air brake tubing be constructed of nylon (polyamide), there are risks that alternate materials will not provide adequate long-term service in air brake systems. Each petitioner noted that SAE J844, upon which the agency based its new requirements for plastic air brake tubing, is based on the assumption the nylon specified in that standard has known properties that other materials may not possess, such as material hardness that could affect end fitting retention. However, the agency notes that it went beyond solely the SAE J844 requirements and incorporated substantive requirements from SAE

J1131 as well to address such issues to the extent practicable. The agency is not aware of what additional steps it could take to further ensure that plastic air brake tubing and end fittings could be more compatible.

Parker stated that the agency's final rule now shifts the burden of qualification such that the entity assembling a plastic air brake tube to its end fittings must bear the entire burden of compliance, and that the final rule changes the business model significantly. The agency disagrees. Under the newly adopted requirements of the December 20, 2004 final rule, there are plastic tubing specifications including dimensional requirements, tensile strength, etc., that qualify the tubing, and then there are assembly requirements that qualify plastic air brake tubing assemblies with the end fittings installed. The requirements for assemblers were not changed in the final rule such that additional compliance burdens were placed on them.

Apgar and Arkema cited the efforts of the SAE committee to develop SAE J2547 to address specifications for plastic air brake tubing that is constructed from materials other than nylon, but the agency notes that this effort has been ongoing for several years and work on this standard has still not been completed, nor has any draft of that standard been provided to the agency. Both companies stated that SAE J2547 is still a working document and is only for use within the subcommittee. Thus the agency has not been able to consider this document in addressing the petitions.

Degussa, Parker, Apgar, and Arkema all stated that by not adopting the nylon (polyamide) material specification from SAE J844, the safety of air brake tubing is potentially reduced because alternative materials that could be used in air brake tubing may not have the same demonstrated performance as nylon. However, as discussed at length in the December 20, 2004 final rule (69 FR 76307), the agency has determined that the specification of nylon construction would be unnecessarily design-restrictive. The agency believes it is more appropriate, and enforceable, to measure the pass/fail performance of any air brake tubing through appropriate performance tests that are included in FMVSS No. 106.

Degussa, Apgar, and Arkema provided recommendations for additional performance tests for plastic air brake tubing. Sources for these additional tests include SAE 2260, Nonmetallic Fuel System Tubing, with One or More Layers (November 2004); ISO 7628–2, Road Vehicles—Thermoplastics Tubing for Air Brake Systems (1998); and independent or proprietary performance tests that were developed and proposed by the commenters. We have reviewed these performance tests and decided that certain aspects could be adopted into FMVSS No. 106 and these are proposed in this notice for public comment. However, the agency is not proposing to adopt the extensive additional performance requirements recommended by Arkema and Degussa. In the companion document published in today's **Federal Register**, we are denying substantial portions of these petitions.

2. *Plastic Air Brake Tubing Dimensions*—Apgar brought to the agency's attention that several minor changes to the dimensions of plastic air brake tubing were made by the SAE subcommittee in the most recent revision of SAE J844 (November 2004). The requirements from SAE J1394, Metric Nonmetallic Air Brake Tubing (April 2000) were also incorporated into SAE J844 so that one standard would cover both inch-dimensioned and metric sizes of tubing.

Apgar submitted changes to the dimensional requirements in Table I of SAE J844 that were made in the November 2004 revision of SAE J844. These are recommended by Apgar to be adopted into Table VII of FMVSS No. 106. The agency is requesting comments on whether to make these changes. A notable change to SAE J844, and proposed for FMVSS No. 106, is that three sizes of metric tubing (4-mm, 8-mm, and 19-mm) are sized the same as three sizes of inch-dimensioned tubing (5/32 inch, 5/16 inch, and 3/4 inch).

Two of the metric sizes, 4 mm and 19 mm, are new designations for metric-sized tubing. 8 mm tubing was previously included in both SAE J1394 and in the final rule specifications of FMVSS No. 106. The two metric sizes, however, were subsequently moved from SAE J1394 to SAE J844, and Apgar submitted revisions from SAE J844 to the 5/16 inch dimensions to make that size of tubing the same as 8-mm tubing. The agency proposes to make 5/16 inch dimensions the same size as 8 mm tubing in FMVSS No. 106 in this NPRM and finds that if made final, there will be a slight increase (0.8 percent) in the overall diameter of 5/16 inch brake tubing. The agency does not believe this slight increase in overall diameter of 5/16 inch brake tubing will result in incompatibility for new tubing manufactured to these dimensions with the existing end fittings on motor vehicles, as this change is small, but the agency welcomes comments on this issue.

Since SAE J844 no longer includes measurements in inches, the agency has converted dimensions of millimeters to inches and is presenting these proposed revisions to Table VII in FMVSS No. 106 in this notice. A detailed description of the changes proposed for each size of tubing in Table VII is provided below. Unless otherwise noted, the dimensional changes provided here, as recommended by Apgar, are considered to be very minor deviations from the dimensions published in the December 20, 2004 final rule. The changes are on the order of hundredths of a millimeter (i.e., from 2.01-mm to 2.02-mm) and thousandths of an inch (i.e., from 0.079 inch to 0.080 inch):

1/8 inch O.D.—The maximum O.D. is proposed to change from 3.25 to 3.26 mm. The inch equivalent is proposed to remain unchanged at 0.128 inches. The nominal inside diameter is proposed to be changed from 2.01 to 2.02 mm. The inch equivalent is proposed to be changed from 0.079 to 0.080 inches.

5/32 inch O.D.—The maximum O.D. is proposed to change from 4.04 to 4.08 mm. The inch equivalent is proposed to change from 0.159 to 0.161 inches. The minimum O.D. is proposed to change from 3.89 to 3.92 mm. The inch equivalent is proposed to change from 0.153 to 0.154 inches. The nominal I.D. is proposed to change from 2.34 to 2.38 mm. The inch equivalent then is proposed to change from 0.092 to 0.094 inches. If made final, these changes would represent a small increase in the overall size of 5/32 inch O.D. tubing. Also, SAE J844 now designates this size of tubing as equivalent to metric-sized 4 mm O.D. tubing, which is a new size that now appears in that SAE standard. The agency proposes that this new size also be incorporated in FMVSS No. 106.

1/4 inch O.D.—The nominal I.D. is proposed to change from 4.32 to 4.35 mm. The inch equivalent is proposed to change from 0.170 to 0.171 inches. The nominal wall thickness is proposed to be changed from 1.02 to 1.00 mm. The inch equivalent then is proposed to be changed from 0.040 to 0.039 inches.

5/16 inch O.D.—The maximum O.D. is proposed to change from 8.03 to 8.10 mm. The inch equivalent is proposed to be changed from 0.316 to 0.319 inches. The minimum O.D. is proposed to be changed from 7.82 to 7.90 mm. The inch equivalent then is proposed to be changed from 0.308 to 0.311 inches. The nominal I.D. is proposed to be changed from 5.89 to 6.00 mm. The inch equivalent then is proposed to be changed from 0.232 to 0.236. The nominal wall thickness is proposed to

be changed from 1.02 to 1.00 mm. The inch equivalent then is proposed to be changed from 0.040 to 0.039 inches. If made final, these changes would represent a moderate increase in the overall diameter of 5/16 O.D. tubing, and would make it identical to 8 mm metric-sized air brake tubing.

3/8 inch O.D.—The minimum O.D. is proposed to change from 9.42 to 9.43 mm. The inch equivalent is proposed to remain unchanged at 0.371 inches. The nominal inside diameter is proposed to change from 6.38 to 6.39 mm. The inch equivalent is then proposed to change from 0.251 to 0.252 inches.

1/2 inch O.D.—The nominal I.D. is proposed to change from 9.55 to 9.56 mm. The inch equivalent is proposed to remain unchanged at 0.376 inches.

5/8 inch O.D.—The maximum O.D. is proposed to change from 16.00 to 16.01 mm. The inch equivalent is proposed to remain unchanged at 0.630 inches.

3/4 inch O.D.—The nominal I.D. is proposed to change from 14.38 to 14.37 mm. The inch equivalent is proposed to remain unchanged at 0.566 inches.

4 mm O.D.—This is a new size of metric-dimensioned air brake tubing proposed to be added to Table VII of FMVSS No. 106 as discussed above. It is proposed to be identical in size to 5/32 inch O.D. tubing.

6 mm O.D.—The maximum O.D. is proposed to change from 6.10 to 6.08 mm. The inch equivalent is proposed to change from 0.240 to 0.239 inches. The minimum O.D. is proposed to change from 5.90 to 5.92 mm. The inch equivalent is then proposed to change from 0.232 to 0.233 inches. The wall thickness tolerance is proposed to change from 0.10 mm to 0.08 mm. The inch equivalent is then proposed to change from 0.004 to 0.003 inches.

8 mm O.D.—No changes are proposed for this size of tubing, but minor changes to 5/16 inch O.D. tubing are proposed so that it will be identical to 8 mm O.D. tubing, as described above.

10 mm O.D.—Apgar stated that the nominal I.D. of 7.00 mm as published in the agency's final rule is the correct value for this dimension. However, the value of 8.50 mm that is in the November 2004 revision of SAE J844 is in error, and the SAE committee working on that standard will make the correction in the next revision of SAE J844. No changes to the 10 mm O.D. in FMVSS No. 106 are proposed in this NPRM.

12 mm O.D.—Apgar stated that the nominal I.D. of 9.00 mm as published in the agency's final rule is the correct value for this dimension. However, the value of 10.50 mm that is in the November 2004 revision of SAE J844 is in error, and the SAE committee working on that standard will make the correction in the next revision of SAE J844. No changes to the 12 mm O.D. in FMVSS No. 106 are proposed in this NPRM.

19 mm O.D.—This is a new size of metric air brake tubing that is proposed to be added to Table VII in FMVSS No. 106. It is proposed to be dimensionally identical to 3/4 inch O.D. tubing as described above.

3. *Table VII*—Philatron International petitioned the agency to amend the tubing dimension requirements by distinguishing air brake tubing used in conjunction with replaceable and/or reusable end fittings from air brake tubing assemblies manufactured with permanent end fittings. Philatron stated that these differences existed prior to the agency's December 20, 2004 final rule. Because of the outer dimension requirements, there is no longer an allowance for the construction of air brake assemblies with permanent end fittings. To resolve the situation, Philatron asked that the title of Table VII be changed to specifically state that it only applies to air brake tubing with reusable end fittings, and the regulatory text of S11.1 *Construction* reflect that change.

NHTSA agrees with Philatron's request. We did not intend to drop the distinction between permanent end fittings and those that can be reused and/or replaced. However, rather than changing the title of Table VII as suggested by the petitioner, the agency proposes to change the regulatory text in S11.1 to reflect that the outer dimensions in Table VII do not apply to air brake assemblies with permanently attached end fittings.

We propose to add notation to Table VII to indicate that the following sizes of tubing are identical, and that they can be labeled with either or both size identification labeling: 5/32 inch and 4mm; 5/16 inch and 8 mm; and 3/4 inch and 19 mm.

4. *Plastic Air Brake Tubing Mechanical Properties*—As the agency is proposing to add two new sizes (4 mm and 19 mm) of air brake tubing to FMVSS No. 106, it is necessary to provide updates to Table VIII— Plastic Air Brake Tubing Mechanical Properties. The agency proposes to adopt the burst strength pressure, supported bend radii, and unsupported bend radii for these new sizes of tubing directly from SAE J844 as follows:

4 mm O.D.—The agency proposes to adopt mechanical properties from 5/32 inch tubing that is the same size as 4 mm tubing, as follows: Burst strength pressure 8,300 kPa (1,200 psi), supported bend radius 12.7 mm (0.50 inches), and unsupported bend radius 12.7 mm (0.50 inches). The proposed conditioned tensile load strength is 178 N (40 lbf).

19 mm O.D.—The agency proposes to adopt mechanical properties from 3/4 inch tubing that is the same size as 19 mm tubing, as follows: Burst strength pressure 5,500 kPa (800 psi), supported bend radius 76.2 mm (3.00 inches), and unsupported bend radius 88.9 mm (3.50 inches). The proposed conditioned tensile load strength is 1,557 N (350 lbf).

In addition, the agency proposes to make the following changes to the supported and unsupported bend radii for the following sizes of plastic air brake tubing that are in agreement with the latest revision of SAE J844:

5/16 inch O.D.—Supported bend radius is proposed to be changed from 31.8 mm (1.25 inches) to 32.0 mm (1.26 inches).

6 mm O.D.—Supported bend radius is proposed to be changed from 20.0 mm (0.75 inches) to 25.4 mm (1.00 inches).

8 mm O.D.—Supported bend radius is proposed to be changed from 31.8 mm (1.25 inches) to 32.0 mm (1.26 inches).

12 mm O.D.—Supported bend radius is proposed to be changed from 44.5 mm (1.75 inches) to 45.0 mm (1.77 inches). Unsupported bend radius is proposed to be changed from 63.5 mm (2.50 inches) to 56.3 mm (2.22 inches).

16 mm O.D.—Supported bend radius is proposed to be changed from 69.9 mm (2.75 inches) to 70.0 mm (2.76 inches). Unsupported bend radius is proposed to be changed from 76.2 mm (3.00 inches) to 84.0 mm (3.31 inches).

5. *Impact Test Apparatus*—Since the agency is proposing to revise the dimensional specifications for some sizes of tubing, it is also necessary to revise the dimensions of the impact test apparatus with regard to the hole diameters in its base. The agency has reviewed SAE J844 and found that some sizes for the impact test apparatus were changed slightly in the November 2004 revision, and references to 4 mm and 19 mm brake tubing were added. The agency proposes to change the table accompanying Figure 8 in FMVSS No. 106 to reflect the latest revisions to J844.

6. *Resistance to Corrosive Salt Compounds*—In its final rule to amend FMVSS No. 106, the agency included a zinc chloride resistance test for plastic air brake tubing in S11.3.12, Zinc Chloride Resistance, consisting of immersion of a sample of tubing bent around a test cylinder and submerged in a 50 percent zinc chloride aqueous solution for 200 hours. The required performance is that the outer surface of the tubing shall not show cracks visible under 7-power magnification. Such

cracks are most likely to occur along the bent section of tubing where the stresses are highest. This zinc chloride resistance test was based on identical requirements in SAE J844.

Comments to the NPRM indicated that the zinc chloride resistance test proposed by the agency, and adopted in the final rule, was not particularly severe in evaluating the resistance of plastic materials to salts. However, the agency did not adopt any more stringent requirements than it had proposed in the NPRM. We are revisiting this issue based upon two petitions and also comments received previously in response to the NPRM, and are proposing a moderate increase in severity of this test requirement by changing to a mixture of five salt compounds as specified in ISO 7628–2 Road Vehicles—Thermoplastic Tubing for Air Brake Systems (1998–08–15), and by exposing the cut ends of tubing to the salt solution.

In their petitions, both Degussa and Arkema recommended adopting the zinc chloride resistance test from SAE J2260, Nonmetallic Fuel System Tubing with One or More Layers (November 1, 1996) to FMVSS No. 106. In section 7.5 of SAE J2260 it states that a sample of plastic fuel tubing is prepared with end fittings, bent 180 degrees, and then submerged, in a 50 percent aqueous solution of zinc chloride at 23 degrees Celsius for 200 hours. The requirements are specific in stating that the tubing is submerged in the salt solution with both cut ends of the tubing submerged, but the solution is not permitted to enter through the fittings to the inside of the tubing. This exposes each layer of the tubing at its cut ends. Although the agency does not have detailed information on the styles of end fittings used with this tubing, there is flexibility provided in standard J2260 for the selection of end fittings used in this test. This would be a variable in the test procedure regarding stresses at the cut ends of the tubing because different sizes of end fittings or plugs would impart different levels of stress on the tubing depending on how much the ends of the tubing are expanded.

Other than the treatment and exposure of the tubing ends, the requirements in J844 are similar to those in J2260 with regard to salt solution composition, solution temperature, and exposure time.

In its petition, Arkema recommends a requirement for test mandrels (tubing end plugs) that would be specified for exposing the cut tubing ends in salt resistance test. The recommended mandrels described by Arkema are in Table X on page 11 of its petition and range from 145 percent to 130 percent of the nominal inside diameter of the tubing. Mandrels of these sizes would substantially expand the tubing and induce large stresses at the ends of the tubing. Since plastic air brake tubing is not particularly flexible in expansion, inserting mandrels of these sizes would require considerable force and would result in high stresses at the tubing end. Arkema further recommends that tubing manufactured from more than one layer be abraded through at least 25 percent of the wall thickness and exposed to zinc chloride.

We reviewed two SAE standards describing push-to-connect end fittings for use with air brake tubing to see if they could provide information on the expansion of plastic air brake tubing at the end fittings: J2494, Push-to-Connect Tube Fittings for Use in the Piping of Vehicular Air Brake; and J2494–2 Dimensional Specifications for Non-Metallic Body Push-to-Connect Fittings Used on a Vehicular Air Brake System. These standards provide external dimensions of push-to-connect end fittings but do not provide dimensions of the tube support that is inserted into the inside diameter of the tubing during assembly.

The agency also reviewed SAE J246, Spherical and Flanged Sleeve (Compression) Tube Fittings and determined that the tube supports described in *Table 4 Dimensions of Tube Support,* for these fittings are smaller than the inside diameter of SAE J844 air brake tubing described in *Table 1—Dimensions and Tolerances,* of that standard. It appears that assembling air brake tubing with these end fittings would not result in expansion of the ends of the tubing during assembly, and therefore these standards do not provide any insight into what size of test mandrels might be suitable for use in the salt resistance test.

The agency believes that the mandrel sizes recommended by Arkema that are between 130 and 145 percent of tubing nominal inside diameter would be too large for typical plastic air brake tubing, and instead we are proposing that the plugs be 5 percent larger than the nominal inside diameter of the tubing. The agency believes this specification would satisfactorily plug the tubing without inducing excessive stresses at the ends of the tubing. The agency also is proposing a change to S11.3.12 in FMVSS No. 106 to include submersion of the cut ends of the tubing during the immersion of the tubing sample in the salt solution. By exposing the cut ends of the tubing, and therefore each layer that exists in the tubing, it would not be necessary to conduct salt compound resistance tests as recommended by Arkema by partially abrading the samples of brake tubing.

Regarding the composition of the salt solution, the agency is proposing to change from a simple zinc chloride salt solution to a mixture of salts specified in ISO 7628–2 Road Vehicles—Thermoplastic Tubing for Air Brake Systems (1998–08–15). The agency discussed this issue in the final rule (69 FR 76310) and noted that comments received from DuPont Engineered Polymers and Saint-Gobain Performance Plastics in response to the NPRM indicated that those companies believed it may be appropriate to consider adopting the salt solution specified in ISO 7628–2.

The salt resistance test in Section 7.9 of ISO 7628–2 requires that six samples of tubing be bent to a radius of 5.5 times the outside diameter of the tubing and then submerged in a salt bath to within 5 mm of the cut ends of the tubing. The salt bath consists of a mixture of 30 percent copper chloride, 20 percent sodium chloride, 20 percent potassium chloride, 30 percent zinc chloride, with this mixture added to one part water to produce a 50 percent aqueous solution. The bent tubing is removed from the salt bath after five minutes and then placed in an environmental chamber at a temperature of 60 degrees Celsius (140 degrees Fahrenheit) and a relative humidity of at least 85 percent for 24 hours. The immersion and environmental conditioning is repeated for a total of 8 cycles (one environmental conditioning period is permitted to be 72 hours rather than 24 hours).

After this conditioning, the tubing is subjected to a burst test at 23 degrees Celsius (73.4 degrees Fahrenheit) with the required performance of withstanding 4 MPa (580 psi) if the tubing is designated as 1 MPa (145 psi) tubing or 5 MPa (725 psi) if it is 1.25 MPa (181 psi) tubing. Annex D of the standard requires testing of the end fitting area of the tubing if it is assembled using barbed (fir-tree) end fittings and the tubing is constructed of copolyester, but this test does not include submerging the cut ends of the tubing in the salt bath. It does subject the ends of the tubing to exposure (to within 5 mm of the cut ends) in an area of high stress where the tubing has been expanded over the barbed end fitting. However, the agency is proposing to minimize the tubing stress at the cut ends by using plugs that are 105 percent of the inside diameter of the tubing. Further, the agency is not aware of any barbed-type end fittings being used with plastic air brake tubing in the U.S.

The agency proposes to maintain the 200-hour immersion requirement for the salt resistance test in S11.3.12 of FMVSS No. 106. The agency invites comments on the proposal to adopt the salt solution from ISO 7628 into FMVSS No. 106, and to add requirements to test the cut ends of plastic tubing by fully immersing the tubing sample in the salt solution.

7. *Resistance to Methyl Alcohol*—In the final rule, the agency adopted the requirements of SAE J844 for resistance to methyl alcohol (69 FR 76310). In the test as specified in SAE J844, a sample of tubing is bent around a test cylinder of specified radius and the tubing and cylinder are immersed in a 95 percent methyl alcohol aqueous solution for 200 hours. Upon completing this exposure, the tubing must not exhibit cracks on its outer surface when viewed under 7-power magnification.

In its petition for reconsideration, Degussa stated that in both the methyl alcohol resistance test and in the zinc chloride resistance test (discussed above), each layer of the tubing at the cut ends of the tubing should be exposed to these chemical solutions to determine the chemical resistance of each layer of the tubing. Since the agency believes it is appropriate to expose each layer of tubing during a chemical resistance test, we are proposing to modify the methyl alcohol resistance test in S11.3.13 to include testing of the cut ends of the tubing.

The agency believes that this is similar to the salt resistance test requirements described in the section above since SAE J844 is not detailed as to the specific requirements for the cut ends of the tubing. The agency proposes to adopt similar requirements for methyl alcohol resistance as for corrosive salt resistance by plugging the ends of the tubing with plugs having a diameter equal to 105 percent of the nominal inside diameter of the tubing and specifying that the entire length of tubing be immersed in the methyl alcohol solution.

V. Rulemaking Analyses and Notices

A. Executive Order 12866 and DOT Regulatory Policies and Procedures

Executive Order 12866, ''Regulatory Planning and Review'' (58 FR 51735, October 4, 1993), provides for making determinations whether a regulatory action is ''significant'' and therefore subject to Office of Management and Budget (OMB) review and to the requirements of the Executive Order. The Order defines a ''significant regulatory action'' as one that is likely to result in a rule that may:

(1) Have an annual effect on the economy of $100 million or more or adversely affect in a material way the economy, a sector of the economy, productivity, competition, jobs, the environment, public health or safety, or State, local, or Tribal governments or communities;

(2) Create a serious inconsistency or otherwise interfere with an action taken or planned by another agency;

(3) Materially alter the budgetary impact of entitlements, grants, user fees, or loan programs or the rights and obligations or recipients thereof; or

(4) Raise novel legal or policy issues arising out of legal mandates, the President's priorities, or the principles set forth in the Executive Order.

This notice was not reviewed under Executive Order 12866. Further, this notice was determined not to be significant within the meaning of the DOT Regulatory Policies and Procedures.

In this document, NHTSA is proposing to incorporate performance requirements and test procedures that are based on voluntary standards adopted by the Society of Automotive Engineers. The agency believes that most, if not all, such hoses, tubing, and fittings are already designed to meet the SAE requirements/procedures. However, in the event that there are some brake hose products that would need to be modified to comply with the proposed regulations, the agency (1) estimates that it is a small proportion of brake hose products that would need modification, as most are believed to already comply; and (2) tentatively concludes that the manufacturers of the components used in producing such products are not small businesses.

The agency believes that there are large manufacturers that produce both hydraulic and vacuum brake hoses in such large quantities. There are many small companies that use the brake hose material and end fitting components to produce brake hose assemblies, but NHTSA does not anticipate that they would be affected by the proposed changes because they simply assemble already-compliant components supplied by the large manufacturers.

Since evidence available to NHTSA suggests that most, if not all, of these hose, tubing, and fittings are already compliant with the minimum performance requirements that the agency is proposing to apply, the agency believes that the impacts of this rulemaking would be minimal. Thus, it has not prepared a full regulatory evaluation.

B. Regulatory Flexibility Act

Pursuant to the Regulatory Flexibility Act (5 U.S.C. 601 *et seq.,* as amended by the Small Business Regulatory Enforcement Fairness Act (SBREFA) of 1996), whenever an agency is required to publish a notice of rulemaking for any proposed or final rule, it must prepare and make available for public comment a regulatory flexibility analysis that describes the effect of the rule on small entities (i.e., small businesses, small organizations, and small governmental jurisdictions). The Small Business Administration's regulations at 13 CFR Part 121 define a small business, in part, as a business entity ''which operates primarily within the United States.'' (13 CFR § 121.105(a)). No regulatory flexibility analysis is required if the head of an agency certifies that the rule will not have a significant economic impact on a substantial number of small entities. The SBREFA amended the Regulatory Flexibility Act to require Federal agencies to provide a statement of the factual basis for certifying that a rule will not have a significant economic impact on a substantial number of small entities.

NHTSA has considered the effects of this rulemaking action under the Regulatory Flexibility Act. As explained above, NHTSA is proposing to incorporate performance requirements and test procedures that are based on voluntary standards adopted by the Society of Automotive Engineers. The agency believes that most, if not all, such hoses, tubing, and fittings are already designed to meet the most recent SAE requirements/procedures. As earlier stated, any potential additional cost would not be expected to have any impact on small businesses, but only on large manufacturers of brake hose materials that are produced in large quantities. Accordingly, I hereby certify that it would not have a significant economic impact on a substantial number of small entities.

C. National Environmental Policy Act

NHTSA has analyzed this rulemaking action for the purposes of the National Environmental Policy Act. The agency has determined that implementation of this action would not have any significant impact on the quality of the human environment.

D. Executive Order 13132 (Federalism)

NHTSA has examined today's proposal pursuant to Executive Order 13132 (64 FR 43255, August 10, 1999) and concluded that no additional consultation with States, local

governments or their representatives is mandated beyond the rulemaking process. The agency has concluded that the proposal does not have federalism implications because the rule does not have ''substantial direct effects on the States, on the relationship between the national government and the States, or on the distribution of power and responsibilities among the various levels of government.''

Further, no consultation is needed to discuss the preemptive effect of today's proposal. NHTSA rules can have preemptive effect in at least two ways. First, the National Traffic and Motor Vehicle Safety Act contains an express preemptive provision: ''When a motor vehicle safety standard is in effect under this chapter, a State or a political subdivision of a State may prescribe or continue in effect a standard applicable to the same aspect of performance of a motor vehicle or motor vehicle equipment only if the standard is identical to the standard prescribed under this chapter.'' 49 U.S.C. 30103(b)(1). If this proposal is adopted as a final rule, it is this statutory command that would preempt State law, not the rule, so consultation would be inappropriate.

In addition to the express preemption noted above, the Supreme Court has also recognized that State requirements imposed on motor vehicle manufacturers, including sanctions imposed by State tort law, can stand as an obstacle to the accomplishment and execution of a NHTSA safety standard. When such a conflict is discerned, the Supremacy Clause of the Constitution makes these State requirements unenforceable. *See Geier* v. *American Honda Motor Co.,* 529 U.S. 861 (2000). NHTSA has not outlined such potential State requirements in connection with the proposed rule, however, in part because such conflicts can arise in varied contexts. If the proposal is adopted as a final rule, it is conceivable that such a conflict could become clear through subsequent experience with the rule and test regime. NHTSA may opine on such conflicts in the future, if warranted.

E. Executive Order 12988 (Civil Justice Reform)

With respect to the review of the promulgation of a new regulation, section 3(b) of Executive Order 12988, ''Civil Justice Reform'' (61 FR 4729, February 7, 1996) requires that Executive agencies make every reasonable effort to ensure that the regulation: (1) Clearly specifies the preemptive effect; (2) clearly specifies the effect on existing Federal law or regulation; (3) provides a clear legal standard for affected conduct, while promoting simplification and burden reduction; (4) clearly specifies the retroactive effect, if any; (5) adequately defines key terms; and (6) addresses other important issues affecting clarity and general draftsmanship under any guidelines issued by the Attorney General. This document is consistent with that requirement.

Pursuant to this Order, NHTSA notes as follows. The preemptive effect of this proposed rule is discussed above. NHTSA notes further that there is no requirement that individuals submit a petition for reconsideration or pursue other administrative proceeding before they may file suit in court.

F. Paperwork Reduction Act

Under the Paperwork Reduction Act of 1995, a person is not required to respond to a collection of information by a Federal agency unless the collection displays a valid Office of Management and Budget (OMB) control number. This proposed rule would not require any collections of information as defined by the OMB in 5 CFR part 1320.

G. National Technology Transfer and Advancement Act

Section 12(d) of the National Technology Transfer and Advancement Act of 1995 (NTTAA), Public Law 104–113, section 12(d) (15 U.S.C. 272) directs NHTSA to use voluntary consensus standards in its regulatory activities unless doing so would be inconsistent with applicable law or otherwise impractical. Voluntary consensus standards are technical standards (e.g., materials specifications, test methods, sampling procedures, and business practices) that are developed or adopted by voluntary consensus standards bodies, such as the Society of Automotive Engineers (SAE). The NTTAA directs the agency to provide Congress, through the OMB, explanations when we decide not to use available and applicable voluntary consensus standards.

The proposed changes that NHTSA is proposing are based on voluntary consensus standards adopted by the Society of Automotive Engineers. Accordingly, this proposed rule is in compliance with Section 12(d) of NTTAA.

H. Unfunded Mandates Reform Act

Section 202 of the Unfunded Mandates Reform Act of 1995 (UMRA) requires Federal agencies to prepare a written assessment of the costs, benefits, and other effects of proposed or final rules that include a Federal mandate likely to result in the expenditure by State, local or tribal governments, in the aggregate, or by the private sector, of more than $100 million in any one year (adjusted for inflation with base year of 1995). Before promulgating a rule for which a written statement is needed, section 205 of the UMRA generally requires NHTSA to identify and consider a reasonable number of regulatory alternatives and adopt the least costly, most cost-effective, or least burdensome alternative that achieves the objectives of the rule. The provisions of section 205 do not apply when they are inconsistent with applicable law. Moreover, section 205 allows NHTSA to adopt an alternative other than the least costly, most cost-effective or least burdensome alternative if the agency publishes with the final rule an explanation why that alternative was not adopted.

This proposed rule would not result in the expenditure by State, local, or tribal governments, in the aggregate, or by the private sector of more than $100 million annually. Accordingly, the agency has not prepared an Unfunded Mandates assessment.

I. Plain Language

Executive Order 12866 requires each agency to write all rules in plain language. Application of the principles of plain language includes consideration of the following questions:

—Have we organized the material to suit the public's needs?
—Are the requirements in the rule clearly stated?
—Does the rule contain technical language or jargon that is not clear?
—Would a different format (grouping and order of sections, use of headings, paragraphing) make the rule easier to understand?
—Would more (but shorter) sections be better?
—Could we improve clarity by adding tables, lists, or diagrams?
—What else could we do to make this rulemaking easier to understand?

If you have any responses to these questions, please include them in your comments on this NPRM.

J. Regulation Identifier Number (RIN)

The Department of Transportation assigns a regulation identifier number (RIN) to each regulatory action listed in the Unified Agenda of Federal Regulations. The Regulatory Information Service Center publishes the Unified Agenda in April and October of each year. You may use the RIN contained in the heading at the beginning of this document to find this action in the Unified Agenda.

K. Privacy Act

Anyone is able to search the electronic form of all comments received into any of our dockets by the name of the individual submitting the comment (or signing the comment, if submitted on behalf of an association, business, labor union, etc.). You may review DOT's complete Privacy Act Statement in the **Federal Register** published on April 11, 2000 (65 FR 19477 at 19478).

L. Comments

How do I prepare and submit comments?

Your comments must be written and in English. To ensure that your comments are correctly filed in the Docket, please include the docket number of this document in your comments.

Your comments must not be more than 15 pages long. (49 CFR 553.21). We established this limit to encourage you to write your primary comments in a concise fashion. However, you may attach necessary additional documents to your comments. There is no limit on the length of the attachments.

Please submit two copies of your comments, including the attachments, to Docket Management at the address given above under **ADDRESSES**.

You may also submit your comments to the docket electronically by logging onto the Federal Docket Management System Web site at *http://www.regulations.gov.* Follow the online instructions for submitting information.

Please note that pursuant to the Data Quality Act, in order for substantive data to be relied upon and used by the agency, it must meet the information quality standard set forth in the OMB and DOT Data Quality Act guidelines. Accordingly, we encourage you to consult the guidelines in preparing your comments. OMB's guidelines may be accessed at: *http://www.whitehouse.gov/omb/fedreg/reproducible.html.* DOT's guidelines may be accessed at *http://dmses.dot.gov/submit/DataQualityGuidelines.pdf.*

How can I be sure that my comments were received?

If you wish Docket Management to notify you upon its receipt of your comments, enclose a self-addressed, stamped postcard in the envelope containing your comments. Upon receiving your comments, Docket Management will return the postcard by mail.

How do I submit confidential business information?

If you wish to submit any information under a claim of confidentiality, you should submit three copies of your complete submission, including the information you claim to be confidential business information, to the Chief Counsel, NHTSA, at the address given above under **FOR FURTHER INFORMATION CONTACT**. In addition, you should submit two copies, from which you have deleted the claimed confidential business information, to Docket Management at the address given above under **ADDRESSES**. When you send a comment containing information claimed to be confidential business information, you should include a cover letter setting forth the information specified in our confidential business information regulation. (49 CFR part 512.)

Will the agency consider late comments?

We will consider all comments that Docket Management receives before the close of business on the comment closing date indicated above under **DATES**. To the extent possible, we will also consider comments that Docket Management receives after that date. If Docket Management receives a comment too late for us to consider it in developing a final rule (assuming that one is issued), we will consider that comment as an informal suggestion for future rulemaking action.

How can I read the comments submitted by other people?

You may read the comments received by Docket Management at the address given above under **ADDRESSES**. The hours of the Docket are indicated above in the same location.

You may also see the comments on the Internet. To read the comments on the Internet, go to *http://www.regulations.gov.* Follow the online instructions for accessing the dockets.

Please note that even after the comment closing date, we will continue to file relevant information in the Docket as it becomes available. Further, some people may submit late comments. Accordingly, we recommend that you periodically check the Docket for new material.

List of Subjects in 49 CFR Part 571

Imports, Motor vehicle safety, Motor vehicles, Rubber and rubber products, and Tires.

In consideration of the foregoing, NHTSA proposes to amend 49 CFR part 571 and to further amend the final rule published at 69 FR 76321, December 20, 2004, and effective December 15, 2006, delayed until December 20, 2007 (71 FR 74823, December 13, 2006), as follows:

PART 571—FEDERAL MOTOR VEHICLE SAFETY STANDARDS

1. The authority for part 571 would continue to read as follows:

Authority: 49 U.S.C. 322, 30111, 30115, 30117 and 30166; delegation of authority at 49 CFR 1.50.

2. Section 571.106 would be amended by:

a. Revising in paragraph S5.3.9, the first sentence,

b. Revising paragraph S7.1,

c. Revising Table III,

d. Revising in paragraph (e) of paragraph S7.2.1, the second and third sentences,

e. Revising paragraph S7.3.2,

f. Revising paragraph S7.3.3,

g. Revising Table IV,

h. Revising paragraph (a) of paragraph S8.1,

i. Revising paragraph (a) of paragraph S8.2,

j. Revising paragraph S8.4,

k. Revising the second sentence in paragraph (b) of paragraph S8.13,

l. Revising Table V,

m. Revising paragraph S9.2.10,

n. Revising in paragraph S10.1, paragraph (a) by adding a sentence before the existing sentence and paragraph (d) by revising the second sentence,

o. Revising paragraph (b) of paragraph S10.9.2,

p. Revising S11.1 by revising the second sentence, and adding a third sentence,

q. Revising paragraphs S11.3.12 and S11.3.13,

r. Revising Table VII,

s. Revising Table VIII,

t. Revising the Table accompanying Figure 8, that follows S12.7,

u. Revising in S12.13, the heading; revising in paragraph (a) the second and third sentences and adding fourth and fifth sentences; revising paragraph (c); revising in paragraph (d) the second sentence, and adding a third sentence, and

v. Revising in S12.14, the heading; revising paragraph (a) by adding third, fourth and fifth sentences, revising paragraph (b) by removing the second sentence; by revising paragraph (c); and by revising in paragraph (d), the second sentence and by adding a third sentence.

Section 571.106 would be amended as follows:

§571.106 Standard No. 106; Brake hoses.

* * * * *

S5.3.9 *Brake fluid compatibility, constriction, and burst strength.* Except for brake hose assemblies designed for use with mineral or petroleum-based brake fluids, a hydraulic brake hose assembly shall meet the constriction requirement of S5.3.1 after having been subjected to a temperature of 248 degrees Fahrenheit (120 degrees Celsius) for 70 hours while filled with SAE RM-66-05 ''Compatibility Fluid,'' as described in Appendix B of SAE Standard J1703, revised APR 2004, ''Motor Vehicle Brake Fluid.''* * *

* * * * *

S7.1 *Construction.* Each air brake hose assembly constructed of synthetic or natural elastomeric rubber shall be equipped with permanently-attached brake hose end fittings or reusable brake hose end fittings. Each air brake hose so constructed and intended or use with reusable end fittings shall conform to the dimensional requirements specified in Table III.

* * * * *

TABLE III.—AIR BRAKE HOSE DIMENSIONS FOR REUSABLE ASSEMBLIES.—INSIDE DIAMETER (I.D.) AND OUTSIDE DIAMETER (O.D.) DIMENSIONS IN INCHES (MILLIMETERS)

	Type A: Hose Size—Nominal Inside Diameter					
	1/4	5/16	3/8	7/16	1/2 SP (1)	5/8
Min. I.D.	0.227 (5.8)	0.289 (7.3)	0.352 (8.9)	0.407 (10.3)	0.469 (11.9)	0.594 (15.1)
Max. I.D.	0.273 (6.9)	0.335 (8.5)	0.398 (10.1)	0.469 (11.9)	0.531 (13.5)	0.656 (16.7)
Min. O.D.	0.594 (15.1)	0.656 (16.7)	0.719 (18.3)	0.781 (19.8)	0.844 (21.4)	1.031 (26.2)
Max. O.D.	0.656 (16.7)	0.719 (18.3)	0.781 (19.8)	0.843 (21.4)	0.906 (23.0)	1.094 (27.8)
	Type AI: Hose Size—Nominal Inside Diameter					
	3/16	1/4	5/16	13/32	1/2	5/8
Min. I.D.	0.188 (4.8)	0.250 (6.4)	0.312 (7.9)	0.406 (10.3)	0.500 (12.7)	0.625 (15.9)
Max. I.D.	0.214 (5.4)	0.281 (7.1)	0.343 (8.7)	0.437 (11.1)	0.539 (13.7)	0.667 (16.9)
Min. O.D.	0.472 (12.0)	0.535 (13.6)	0.598 (15.1)	0.714 (18.1)	0.808 (20.5)	0.933 (23.7)
Max. O.D.	0.510 (13.0)	0.573 (14.6)	0.636 (16.2)	0.760 (19.3)	0.854 (21.7)	0.979 (24.9)
	Type AII: Hose Size—Nominal Inside Diameter					
	3/16	1/4	5/16	13/32	1/2	5/8
Min. I.D.	0.188 (4.8)	0.250 (6.4)	0.312 (7.9)	0.406 (10.3)	0.500 (12.7)	0.625 (15.9)
Max. I.D.	0.214 (5.4)	0.281 (7.1)	0.343 (8.7)	0.437 (11.1)	0.539 (13.7)	0.667 (16.9)
Min. O.D.	0.500 (12.7)	0.562 (14.3)	0.656 (16.7)	0.742 (18.8)	0.898 (22.8)	1.054 (26.8)
Max. O.D.	0.539 (13.7)	0.602 (15.3)	0.695 (17.7)	0.789 (20.1)	0.945 (24.0)	1.101 (27.9)
	Type AIII: Hose Size—Nominal Inside Diameter					
	1/4	3/8	1/2	5/8		
Min. I.D.	0.244 (6.2)	0.366 (9.3)	0.484 (12.3)	0.610 (15.5)	.....	.....
Max. I.D.	0.276 (7.0)	0.398 (10.1)	0.531 (13.5)	0.657 (16.7)	.....	.....
Min. O.D.	0.472 (12.0)	0.610 (15.5)	0.748 (19.0)	0.894 (22.7)	.....	.....
Max. O.D.	0.551 (14.0)	0.689 (17.5)	0.827 (21.0)	0.972 (24.7)	.....	.....

* * * * *

S7.2.1(e) * * * The letter ''A'' shall indicate intended use in air brake systems. In the case of a hose constructed of synthetic or natural elastomeric rubber that is manufactured to meet the dimensional requirements in Table III, whether it is intended for use with permanently-attached end fittings or reusable end fittings, the letters ''AI'', ''AII'', or ''AIII'' shall indicate Type AI, Type AII, Type AIII air brake hose, respectively. Metric air brake hose, and any hose that does not conform to the AI, AII, or AIII dimensional requirements, shall be labeled with the letter ''A''.

* * * * *

S7.3.2 *High temperature resistance.* An air brake hose shall not show external or internal cracks, charring, or disintegration visible without magnification when straightened after being bent for 70 hours at 212 degrees Fahrenheit (100 degrees Celsius) over a test cylinder having the radius specified in Table IV for the size of hose tested (S8.1).

S7.3.3 *Low temperature resistance.* The inside and outside surfaces of an air brake hose shall not show cracks as a result of conditioning at minus 40 degrees Fahrenheit (minus 40 degrees Celsius) for 70 hours when bent around a test cylinder having the radius specified in Table IV for the size of hose tested (S8.2)

TABLE IV.—AIR BRAKE HOSE DIAMETERS AND TEST CYLINDER RADII

Nominal hose inside diameter, inches*	3/16	1/4	5/16	3/8	13/32	7/16, 1/2	5/8
Nominal hose inside diameter, mm*	4, 5	6	8	.....	10	12	16
Test cylinder, radius in inches (millimeters)	2 (51)	2½ (64)	3 (76)	3½ (89)	3½ (89)	4 (102)	4½ (114)

* These sizes are listed to provide test cylinder radii for brake hoses manufactured in these sizes. They do not represent conversions.

* * * * *

S8.1 *High temperature resistance test.*

(a) Utilize a test cylinder with a radius specified in Table IV for the size of hose tested.

* * * * *

S8.2 *Low temperature resistance test.*

(a) Utilize a test cylinder with a radius specified in Table IV for the size of hose tested.

* * * * *

S8.4 *Ozone resistance test.* Conduct the test specified in S6.8, using air brake hose, except use the test cylinder specified in Table IV for the size of hose tested.

* * * * *

S8.13 *Adhesion test for air brake hose reinforced by wire.*

* * * * *

(b) * * * With the vacuum still applied to the hose, bend the hose 180 degrees around a test cylinder with a radius specified in Table IV for the size of hose tested. * * *

* * * * *

S9.2.10 *Deformation.*

(a) *Requirements for a vacuum brake hose constructed of synthetic or natural (elastomeric) rubber.* A vacuum brake hose shall return to 90 percent of its original outside diameter within 60 seconds after five applications of force as specified in S10.9, except that a wire-reinforced hose need only return to 85 percent of its original outside diameter. In the case of a heavy-duty hose the first application of force shall not exceed a peak value of 70 pounds, and the fifth application of force shall reach a peak value of at least 40 pounds. In the case of a light-duty hose the first application of force shall not exceed a peak value of 50 pounds, and the fifth application of force shall reach a peak value of at least 20 pounds.

(b) *Requirements for a vacuum brake hose constructed of plastic.* A vacuum brake hose shall return to 90 percent of its original outside diameter within 60 seconds after five applications of a 70 pound force (S10.9).

* * * * *

S10.1 *High temperature resistance test.*

(a) Use a 300 mm (11.8 inch) length of vacuum brake hose if it is constructed of synthetic or natural (elastomeric) rubber, or a 450 mm (17.7 inch) length of vacuum brake hose if it is constructed of plastic. * * *

* * * * *

(d) * * * Bend the hose around a mandrel with a diameter equal to five times the initial outside diameter of the hose if it is constructed of synthetic or natural (elastomeric) rubber, or eight times the initial outside diameter of the hose if it is constructed of plastic. * * *

* * * * *

TABLE V.—VACUUM BRAKE HOSE TEST REQUIREMENTS

Hose inside diameter*		Low temperature resistance test		Bend test	
Inches	Millimeters	Hose length, inches	Radius of cylinder, inches	Hose length, inches	Maximum collapse of outside diameter, inches
7/32	5	17½	3	7	11/64
1/4	6	17½	3	8	3/32
9/32	.....	19	3½	9	3/16
11/32	8	19	3½	11	13/64
3/8	10	19	3½	12	5/32
7/16	.....	20½	4	14	17/64
15/32	.....	20½	4	14	17/64
1/2	12	20½	4	16	7/32
5/8	16	22	4½	22	7/32
3/4	.....	24	5	28	7/32
1	.....	28½	6½	36	9/32

* These sizes are listed to provide test values for brake hoses manufactured in these sizes. They do not represent conversions.

* * * * *

S10.9.2 *Operation.*

* * * * *

(b) For a hose constructed of synthetic or natural (elastomeric) rubber, apply gradually increasing force to the test specimen to compress its inside diameter to that specified in Table VI (dimension D of Figure 4) for the size of hose tested. For a hose constructed of plastic, apply gradually increasing force until 70 pounds of force is reached.

* * * * *

S11.1 *Construction.* * * * Plastic air brake tubing equipped with reusable end fittings shall conform to the dimensional requirements specified in Table VII. Plastic air brake tubing equipped with permanently attached end fittings shall conform to the dimensional requirements specified in Table VII except for the ''Maximum outside diameter'' dimensions.

* * * * *

S11.3.12 *Corrosive salt resistance.* Plastic air brake tubing shall not show cracks, voids, or delamination visible under 7-power magnification after immersion in an aqueous salt solution measured by weight of 50 percent water and 50 percent of a salt mixture consisting of 30 percent copper chloride, 20 percent sodium chloride, 20 percent potassium chloride, and 30 percent zinc chloride, for 200 hours while bent around a cylinder having a radius equal to the supported bend radius in Table VIII for the size of tubing tested (S12.13).

S11.3.13 *Methyl alcohol resistance.* Plastic air brake tubing shall not show cracks, voids, or delamination visible under 7-power magnification after immersion in a 95 percent methyl alcohol aqueous solution for 200 hours while bent around a cylinder having a radius equal to the supported bend radius in Table VIII for the size of tubing tested (S12.14).

* * * * *

TABLE VII.—PLASTIC AIR BRAKE TUBING DIMENSIONS

Nominal tubing outside diameter	Maximum outside diameter		Minimum outside diameter		Nominal inside diameter		Nominal wall thickness		Wall thickness tolerance	
	mm	inches	mm	inches	mm	inches	mm	inches	mm	inches
1/8 inch	3.26	0.128	3.10	0.122	2.02	0.080	0.58	0.023	0.08	0.003
5/32 inch	4.08	0.161	3.92	0.154	2.38	0.094	0.81	0.032	0.08	0.003
3/16 inch	4.83	0.190	4.67	0.184	2.97	0.117	0.89	0.035	0.08	0.003
1/4 inch	6.43	0.253	6.27	0.247	4.35	0.171	1.00	0.039	0.08	0.003
5/16 inch	8.10	0.319	7.90	0.311	6.00	0.236	1.00	0.039	0.10	0.004
3/8 inch	9.63	0.379	9.43	0.371	6.39	0.252	1.57	0.062	0.10	0.004
1/2 inch	12.83	0.505	12.57	0.495	9.56	0.376	1.57	0.062	0.10	0.004
5/8 inch	16.01	0.630	15.75	0.620	11.20	0.441	2.34	0.092	0.13	0.005
3/4 inch	19.18	0.755	18.92	0.745	14.37	0.566	2.34	0.092	0.13	0.005
4 mm	4.08	0.161	3.92	0.154	2.38	0.094	0.81	0.032	0.08	0.003
6 mm	6.08	0.239	5.92	0.233	4.00	0.157	1.00	0.039	0.08	0.003
8 mm	8.10	0.319	7.90	0.311	6.00	0.236	1.00	0.039	0.10	0.004
10 mm	10.13	0.399	9.87	0.389	7.00	0.276	1.50	0.059	0.10	0.004
12 mm	12.13	0.478	11.87	0.467	9.00	0.354	1.50	0.059	0.10	0.004
16 mm	16.13	0.635	15.87	0.625	12.00	0.472	2.00	0.079	0.13	0.005
19 mm	19.18	0.755	18.92	0.745	14.37	0.566	2.34	0.092	0.13	0.005

Note: The following sizes of metric and inch-dimensioned tubing are identical: 5/32 inch and 4 mm; 5/16 inch and 8 mm; 3/4 inch and 19 mm. These sizes may be labeled with either or both of the metric and inch nominal outside diameters.

* * * * *

TABLE VIII.—PLASTIC AIR BRAKE TUBING MECHANICAL PROPERTIES

Nominal Tubing OD	Burst strength pressure		Supported bend radius(1)		Unsupported bend radius(2)		Conditioned tensile load	
	kPa	Psi	mm	inches	mm	inches	N	lbf
1/8 inch	6900	1000	9.4	0.37	9.4	0.37	156	35
5/32 inch	8300	1200	12.7	0.50	12.7	0.50	178	40
3/16 inch	8300	1200	19.1	0.75	19.1	0.75	222	50
1/4 inch	8300	1200	25.4	1.00	25.4	1.00	222	50
5/16 inch	6900	1000	32.0	1.26	38.1	1.50	334	75
3/8 inch	9700	1400	38.1	1.50	38.1	1.50	667	150
1/2 inch	6600	950	50.8	2.00	63.5	2.50	890	200
5/8 inch	6200	900	63.5	2.50	76.2	3.00	1446	325
3/4 inch	5500	800	76.2	3.00	88.9	3.50	1557	350
4 mm	8300	1200	12.7	0.50	12.7	0.50	178	40
6 mm	7600	1100	25.4	1.00	25.4	1.00	222	50
8 mm	6200	900	32.0	1.26	38.1	1.50	334	75
10 mm	8200	1200	38.1	1.50	38.1	1.50	667	150
12 mm	6900	1000	45.0	1.77	56.3	2.22	890	200
16 mm	6000	875	70.0	2.76	84.0	3.31	1446	325
19 mm	5500	800	76.2	3.00	88.9	3.50	1557	350

Notes: (1) Supported bend radius for tests specifying cylinders around which the tubing is bent. (2) Unsupported bend radius for the collapse resistance test in which the tubing is not supported by a cylinder during bending.

* * * * *

TABLE ACCOMPANYING FIGURE 8

Nominal tubing outside diameter	Hole diameter "D"	
	Mm	Inches
1/8 inch	4.00	0.157
5/32 inch	4.80	0.189
3/16 inch	5.54	0.218
1/4 inch	7.14	0.281
5/16 inch	8.80	0.346
3/8 inch	10.30	0.406
1/2 inch	13.49	0.531
5/8 inch	16.66	0.656
3/4 inch	20.32	0.800
4 mm	4.80	0.189
6 mm	6.80	0.268
8 mm	8.80	0.346
10 mm	10.80	0.425
12 mm	12.80	0.504
16 mm	16.80	0.661
19 mm	20.32	0.800

* * * * *

S12.13 *Corrosive salt resistance test.*

(a) * * * The cylinder is constructed of a non-reactive material or coated to prevent chemical reaction with corrosive salt compounds. Prepare a sample of tubing with a length equal to three times the circumference of the cylinder. Plug each end of the tubing with a non-reactive, smooth surface plug with a diameter equal to 105 percent of the nominal inside diameter of the tubing in Table VII for the size of tubing being tested. Each plug shall be inserted into the tubing a distance equal to the nominal inside diameter of the tubing.

* * * * *

(c) Immerse the tubing and cylinder in the 50-percent aqueous salt solution specified in S11.3.12 at room temperature so that the entire tubing sample including the plugged ends is submerged in the solution, for a duration of 200 hours.

(d) * * * Remove the end plugs but retain the tubing on the cylinder. Inspect the outer surface of the tubing, the ends of the tubing, and the inside of the tubing that is visible from the open ends, under 7-power magnification, for cracks, voids, or delamination.

S12.14 *Methyl alcohol resistance test.*

(a) * * * Prepare a sample of tubing with a length equal to three times the circumference of the cylinder. Plug each end of the tubing with a non-reactive, smooth surface plug with a diameter equal to 105 percent of the nominal inside diameter of the tubing in Table VII for the size tubing being tested. Each plug shall be inserted into the tubing a distance equal to the nominal inside diameter of the tubing.

* * * * *

(c) Immerse the tubing and cylinder in a solution measured by weight of 95 percent methyl alcohol and 5 percent water at room temperature so that the entire tubing sample including the plugged ends is submerged in the solution, for a duration of 200 hours.

(d) * * * Remove the end plugs but retain the tubing on the cylinder. Inspect the outer surface of the tubing, the ends of the tubing, and the inside of the tubing that is visible from the open ends, under 7-power magnification, for cracks, voids, or delamination.

* * * * *

Issued: September 27, 2007.

Ronald L. Medford,

Senior Associate Administrator for Vehicle Safety.

[FR Doc. E7–19474 Filed 10–5–07; 8:45 am]

BILLING CODE 4910–59–P

Federal Register

Tuesday,
October 9, 2007

Part V

The President

Proclamation 8185—German-American Day, 2007
Proclamation 8186—Columbus Day, 2007
Proclamation 8187—Leif Erikson Day, 2007

Federal Register
Vol. 72, No. 194
Tuesday, October 9, 2007

Presidential Documents

Title 3—

The President

Proclamation 8185 of October 4, 2007

German-American Day, 2007

By the President of the United States of America

A Proclamation

Generations of German Americans have helped shape our national culture and advance our legacy of freedom. On German-American Day, we recognize the many contributions that Americans of German descent have made to our vibrant country.

German immigrants, in search of a brighter future, were among the first pioneers to settle in Jamestown. Since then, German Americans have influenced our society in all walks of life and helped expand our democratic heritage and our deeply held belief in individual liberty. The leadership and strong spirit of German Americans have helped shape our country and advance the great blessings of our Nation.

German-American Day is also an opportunity to honor the strong ties between the United States and Germany and to celebrate our friendship. On this day, we underscore our commitment to working together to promote peace and making the world a more hopeful place.

NOW, THEREFORE, I, GEORGE W. BUSH, President of the United States of America, by virtue of the authority vested in me by the Constitution and laws of the United States, do hereby proclaim October 6, 2007, as German-American Day. I encourage all Americans to celebrate the many contributions German Americans have made to our Nation's liberty and prosperity.

IN WITNESS WHEREOF, I have hereunto set my hand this fourth day of October, in the year of our Lord two thousand seven, and of the Independence of the United States of America the two hundred and thirty-second.

[FR Doc. 07–5006
Filed 10–5–07; 8:55 am]
Billing code 3195–01–P

Presidential Documents

Proclamation 8186 of October 4, 2007

Columbus Day, 2007

By the President of the United States of America

A Proclamation

In 1492, Christopher Columbus set sail on a journey that changed the course of history. On Columbus Day, we celebrate this voyage of discovery and honor an Italian explorer who shaped the destiny of the New World.

Christopher Columbus' bold journey across the Atlantic opened new frontiers of exploration and demonstrated the power of perseverance. His journeys inspired other risk-takers and dreamers to test the bounds of their imagination and gave them the courage to accomplish great feats, whether crossing the world's oceans or walking on the moon. Today, a new generation of innovators and pioneers continues to uphold the finest values of our country—discipline, ingenuity, and unity in the pursuit of great goals.

As we look back on the contributions of the great explorer from Genoa, we also celebrate the many contributions that generations of Italian Americans have made to our Nation. Their service to America and ties to family, faith, and community have strengthened our country and enriched our culture.

In commemoration of Columbus' journey, the Congress, by joint resolution of April 30, 1934, and modified in 1968 (36 U.S.C. 107), as amended, has requested that the President proclaim the second Monday of October of each year as ''Columbus Day.''

NOW, THEREFORE, I, GEORGE W. BUSH, President of the United States of America, do hereby proclaim October 8, 2007, as Columbus Day. I call upon the people of the United States to observe this day with appropriate ceremonies and activities. I also direct that the flag of the United States be displayed on all public buildings on the appointed day in honor of Christopher Columbus.

IN WITNESS WHEREOF, I have hereunto set my hand this fourth day of October, in the year of our Lord two thousand seven, and of the Independence of the United States of America the two hundred and thirty-second.

[FR Doc. 07–5007
Filed 10–5–07; 8:55 am]
Billing code 3195–01–P

Presidential Documents

Proclamation 8187 of October 4, 2007

Leif Erikson Day, 2007

By the President of the United States of America

A Proclamation

On Leif Erikson Day, we commemorate the enduring legacy of a brave explorer and honor the significant contributions of Nordic Americans who continue to enrich our culture and our way of life.

Leif Erikson, a son of Iceland and grandson of Norway, led a determined crew across the Atlantic more than 1,000 years ago and became one of the first Europeans known to reach North America. The courage of these pioneers helped open the world to new exploration and important discoveries. Today, Nordic Americans help strengthen our country, and their determination and optimism make America a more hopeful land. Our Nation continues to benefit from strong ties with Denmark, Finland, Iceland, Norway, and Sweden, and we are grateful for their continued friendship.

To honor Leif Erikson and to celebrate our citizens of Nordic-American heritage, the Congress, by joint resolution (Public Law 88–566) approved on September 2, 1964, has authorized the President to proclaim October 9 of each year as ''Leif Erikson Day.''

NOW, THEREFORE, I, GEORGE W. BUSH, President of the United States of America, do hereby proclaim October 9, 2007, as Leif Erikson Day. I call upon all Americans to observe this day with appropriate ceremonies, activities, and programs to honor our rich Nordic-American heritage.

IN WITNESS WHEREOF, I have hereunto set my hand this fourth day of October, in the year of our Lord two thousand seven, and of the Independence of the United States of America the two hundred and thirty-second.

[FR Doc. 07–5008
Filed 10–5–07; 8:55 am]
Billing code 3195–01–P

Reader Aids

Federal Register

Vol. 72, No. 194

Tuesday, October 9, 2007

CUSTOMER SERVICE AND INFORMATION

Federal Register/Code of Federal Regulations	
General Information, indexes and other finding aids	**202–741–6000**
Laws	**741–6000**
Presidential Documents	
Executive orders and proclamations	**741–6000**
The United States Government Manual	**741–6000**
Other Services	
Electronic and on-line services (voice)	**741–6020**
Privacy Act Compilation	**741–6064**
Public Laws Update Service (numbers, dates, etc.)	**741–6043**
TTY for the deaf-and-hard-of-hearing	**741–6086**

ELECTRONIC RESEARCH

World Wide Web

Full text of the daily Federal Register, CFR and other publications is located at: **http://www.gpoaccess.gov/nara/index.html**

Federal Register information and research tools, including Public Inspection List, indexes, and links to GPO Access are located at: **http://www.archives.gov/federal_register**

E-mail

FEDREGTOC-L (Federal Register Table of Contents LISTSERV) is an open e-mail service that provides subscribers with a digital form of the Federal Register Table of Contents. The digital form of the Federal Register Table of Contents includes HTML and PDF links to the full text of each document.

To join or leave, go to **http://listserv.access.gpo.gov** and select *Online mailing list archives, FEDREGTOC-L, Join or leave the list (or change settings);* then follow the instructions.

PENS (Public Law Electronic Notification Service) is an e-mail service that notifies subscribers of recently enacted laws.

To subscribe, go to **http://listserv.gsa.gov/archives/publaws-l.html** and select *Join or leave the list (or change settings);* then follow the instructions.

FEDREGTOC-L and **PENS** are mailing lists only. We cannot respond to specific inquiries.

Reference questions. Send questions and comments about the Federal Register system to: **fedreg.info@nara.gov**

The Federal Register staff cannot interpret specific documents or regulations.

FEDERAL REGISTER PAGES AND DATE, OCTOBER

55655–56008 1
56009–56240 2
56241–56616 3
56617–56882 4
56883–57194 5
57195–57482 9

CFR PARTS AFFECTED DURING OCTOBER

At the end of each month, the Office of the Federal Register publishes separately a List of CFR Sections Affected (LSA), which lists parts and sections affected by documents published since the revision date of each title.

3 CFR

Proclamations:
6641 (See Proclamation 8180) 56171
8180 56171
8181 56613
8182 56615
8183 56879
8184 56881
8185 57477
8186 57479
8187 57481

Executive Orders:
11145 (Continued by EO 13446).....56175
11183 (Continued by EO 13446).....56175
11287 (Continued by EO 13446).....56175
12131 (Continued by EO 13446).....56175
12196 (Continued by EO 13446).....56175
12216 (Continued by EO 13446).....56175
12367 (Continued by EO 13446).....56175
12382 (Continued by EO 13446).....56175
12473 (See EO 13447) 56179
12905 (Continued by EO 13446).....56175
12994 (Amended by EO 13446).....56175
13226 (Continued by EO 13446).....56175
13231 (Continued by EO 13446).....56175
13237 (Continued by EO 13446).....56175
13256 (Continued by EO 13446).....56175
13262 (See EO 13447) 56179
13265 (Continued by EO 13446).....56175
13270 (Continued by EO 13446).....56175
13369 (Revoked by EO 13446).....56175
13379 (See EO 13446) 56175
13385 (Superseded in part by EO 13446).....56175
13386 (See EO 13446) 56175
13445 56165
13446 56175
13447 56179

Administrative Orders:
Memorandums:
Memorandum of September 28, 2007 56871
Presidential Determinations:
No. 2007-34 of September 28, 2007 56873
No. 2007-35 of September 28, 2007 56875

5 CFR

1201 56883
1210 56883
1215 56883
1830 56617
2634 56241
2638 56241

Proposed Rules:
352 56019

7 CFR

28 56242
301 57195

Proposed Rules:
6 56677
Ch. VIII.....56945
962 56678

8 CFR

103 56832
204 56832
213a 56832
299 56832
322 56832

10 CFR

2 57416
20 55864
30 55864
31 55864
32 55864
33 55864
35 55864
50 .....55864, 57416
51 57416
52 57416
61 55864
62 55864
72 55864
100 57416
110 55864
150 55864
170 55864
171 55864

Proposed Rules:
50 56275
52 56287
430 57254

11 CFR

113 56245

12 CFR

201 56889
204 55655
218 56514
701 56247
Proposed Rules:
233 56680

14 CFR

39 ....55657, 56254, 56256, 56258, 56262, 56618, 56890, 56891, 57195
91 57196
95 56009
97 ....56266, 56894
119 57196
121 57196
135 57196
Proposed Rules:
39 ....56700, 56945
91 56947

15 CFR

19 57198
21 57198
22 57198
748 56010

17 CFR

240 ....56514, 56562
247 56514

18 CFR

Proposed Rules:
410 57255
806 55711
808 55711

21 CFR

516 57199
522 56896
556 ....56896, 57199
558 56896
Proposed Rules:
870 56702
1314 55712

24 CFR

203 ....56002, 56156

26 CFR

1 56619
Proposed Rules:
301 56704

28 CFR

Proposed Rules:
16 56704

30 CFR

938 56619
Proposed Rules:
250 56442
253 56442
254 56442
256 56442

31 CFR

Proposed Rules:
132 56680

32 CFR

213 56011
752 56267
Proposed Rules:
212 56021

33 CFR

117 ....56013, 56898
165 ....56014, 56898, 57200
Proposed Rules:
117 56025
165 ....56308, 56972
169 56600

37 CFR

Proposed Rules:
381 57101

38 CFR

Proposed Rules:
5 56136

39 CFR

111 56901

40 CFR

9 56903
51 55657
52 ....55659, 55664, 55666, 56268, 56623, 56911, 56914, 57202, 57207, 57209
59 57215
81 57207
82 56628
97 ....55657, 55666, 56914, 57209
721 ....56903, 57222
750 57235
761 57235
Proposed Rules:
51 55717
52 ....55723, 56312, 56706, 56707, 56974, 56975, 57257
81 56312
180 56325
271 57258

42 CFR

418 55672
1001 56632
Proposed Rules:
71 55729

44 CFR

65 57241
67 ....56920, 57245
Proposed Rules:
67 56975

46 CFR

515 56272

47 CFR

1 56015
22 56015
24 56015
27 56015
76 56645
90 ....56015, 56923
101 55673

48 CFR

Proposed Rules:
1516 56708
1533 56708
1552 56708

49 CFR

105 55678
106 55678
107 55678
110 55678
130 55678
171 55678
172 55678
173 55678
174 55678
175 55678
176 55678
178 55678
179 55678
180 55678
365 55697
369 55697
381 55697
382 55697
383 55697
384 55697
385 55697
386 55697
387 55697
388 55697
389 55697
390 55697
391 55697
392 55697
393 55697
395 55697
397 55697
571 57450
Proposed Rules:
565 56027
571 ....56713, 57260, 57459

50 CFR

21 56926
229 57104
635 ....56929, 57104
648 ....55704, 57104
660 ....55706, 55707, 55708, 55709, 56664
679 ....56016, 56017, 56273, 56274, 56933, 56934, 57252
697 56935
Proposed Rules:
17 ....56979, 57273, 57276, 57278
635 ....55729, 56036, 56330

REMINDERS

The items in this list were editorially compiled as an aid to Federal Register users. Inclusion or exclusion from this list has no legal significance.

RULES GOING INTO EFFECT OCTOBER 9, 2007

AGRICULTURE DEPARTMENT

Agricultural Marketing Service

Cotton research and promotion order:
- Sign-up period; conduct procedures; published 9-6-07

AGRICULTURE DEPARTMENT

Animal and Plant Health Inspection Service

Plant-related quarantine, domestic:
- Emerald ash borer; published 10-9-07

COMMERCE DEPARTMENT

Federal claims collection; published 10-9-07

ENVIRONMENTAL PROTECTION AGENCY

Air programs:
- Volatile organic compound emissions control—
  - Paper, film, foil, metal furniture, and large appliance coatings; control techniques guidelines; published 10-9-07

Air quality implementation plans; approval and promulgation; various States:
- Kansas; published 8-9-07
- Missouri; published 8-9-07

Hazardous waste program authorizations:
- Florida; published 8-10-07

Organization, functions, and authority delegations:
- Solid Waste and Emergency Response Office; published 10-9-07

Superfund program:
- National oil and hazardous substances contingency plan priorities list; published 8-9-07

FEDERAL COMMUNICATIONS COMMISSION

Hurricane Katrina; impact on communications networks; independent panel review recommendations; published 8-10-07

HEALTH AND HUMAN SERVICES DEPARTMENT

Food and Drug Administration

Animal drugs, feeds, and related products:
- Florfenicol; published 10-9-07
- Minor uses or minor species; new drugs designation; published 7-26-07

LABOR DEPARTMENT

Employee Benefits Security Administration

Employee Retirement Income Security Act:
- Amendments to civil penalties; published 8-10-07

SECURITIES AND EXCHANGE COMMISSION

Securities futures; short selling in connection with public offering; published 8-10-07

TRANSPORTATION DEPARTMENT

Federal Aviation Administration

Air carrier certification and operations:
- Passenger-carrying operations conducted for compensation and hire in other than standard category aircraft; exemptions; policy statement; published 10-9-07

Airworthiness directives:
- Boeing; published 9-21-07
- Societe de Motorisations Aeronautiques; published 9-21-07
- Turbomeca S.A.; published 9-21-07
- Turbomeca S.A.; correction; published 10-9-07

Airworthiness standards:
- Transport category airplanes—
  - Airplane performance and handling qualities in icing conditions; published 8-8-07

TRANSPORTATION DEPARTMENT

Federal Railroad Administration

Railroad safety:
- Laws and regulations violation; civil monetary penalty; inflation adjustment; published 9-6-07
- Locomotive horns use at highway-rail grade crossings; sounding requirements; technical amendments; published 8-9-07

TRANSPORTATION DEPARTMENT

Surface Transportation Board

Practice and procedure:
- Rail rate cases; simplified standards; published 9-7-07

COMMENTS DUE NEXT WEEK

AGRICULTURE DEPARTMENT

Animal and Plant Health Inspection Service

Plant-related quarantine, domestic:
- Asian longhorned beetle; comments due by 10-19-07; published 8-20-07 [FR E7-16297]

AGRICULTURE DEPARTMENT

Forest Service

National Environmental Policy Act; implementation; comments due by 10-15-07; published 8-16-07 [FR E7-15867]

ARCHITECTURAL AND TRANSPORTATION BARRIERS COMPLIANCE BOARD

Americans with Disabilities Act; implementation:
- Accessibility guidelines—
  - Outdoor developed areas; comments due by 10-18-07; published 6-20-07 [FR 07-02979]

COMMERCE DEPARTMENT

National Oceanic and Atmospheric Administration

Fishery conservation and management:
- Alaska; fisheries of Exclusive Economic Zone—
  - Bering Sea and Aleutian Islands groundfish; comments due by 10-19-07; published 9-19-07 [FR E7-18489]
  - Bering Sea and Aleutian Islands pacific cod; comments due by 10-17-07; published 10-5-07 [FR 07-04955]
  - Pacific cod; comments due by 10-17-07; published 10-5-07 [FR 07-04956]
- Northeastern United States fisheries—
  - Summer flounder; comments due by 10-15-07; published 9-28-07 [FR E7-19133]
- West Coast States and Western Pacific fisheries—
  - Pacific Coast groundfish; correction; comments due by 10-18-07; published 9-18-07 [FR E7-18364]
  - Salmon; comments due by 10-16-07; published 10-1-07 [FR E7-19374]
  - Salmon; comments due by 10-16-07; published 10-1-07 [FR E7-19368]
  - Salmon; comments due by 10-16-07; published 10-1-07 [FR E7-19358]

DEFENSE DEPARTMENT

Defense Acquisition Regulations System

Acquisition regulations:
- Wide Area WorkFlow-Receipt and Acceptance electronic system; mandatory use; comments due by 10-15-07; published 8-14-07 [FR E7-15928]

DEFENSE DEPARTMENT

Civilian health and medical program of the uniformed services (CHAMPUS):
- TRICARE program—
  - Outpatient hospital prospective payment system; comments due by 10-15-07; published 8-14-07 [FR E7-15924]

Federal Acquisition Regulation (FAR):
- Accepting and dispensing of $1 coin; comments due by 10-16-07; published 8-17-07 [FR 07-03803]
- Combating trafficking in persons; comments due by 10-16-07; published 8-17-07 [FR 07-03796]
- Free trade agreements—
  - Bulgaria, Dominican Republic, and Romania; comments due by 10-16-07; published 8-17-07 [FR 07-03799]
- Online Representations and Certifications Application Review; comments due by 10-16-07; published 8-17-07 [FR 07-03800]

ENVIRONMENTAL PROTECTION AGENCY

Air pollutants, hazardous; national emission standards:
- Hazardous waste combustors
  - Legal analysis; comments due by 10-18-07; published 9-27-07 [FR E7-19097]
- Iron and steel foundries; comments due by 10-17-07; published 9-17-07 [FR E7-17972]
- Paint stripping and miscellaneous surface

coating operations; comments due by 10-17-07; published 9-17-07 [FR E7-17973]

Air pollution control; new motor vehicles and engines:

Nonroad diesel engines; emission standards; technical amendments and Tier 3 technical relief provision; comments due by 10-18-07; published 9-18-07 [FR E7-18163]

Air quality implementation plans; approval and promulgation; various States:

California; comments due by 10-17-07; published 9-17-07 [FR E7-18064]

Indiana; comments due by 10-15-07; published 9-13-07 [FR E7-17881]

Kentucky; comments due by 10-15-07; published 9-13-07 [FR E7-17628]

Missouri; comments due by 10-17-07; published 9-17-07 [FR E7-18263]

Pennsylvania; comments due by 10-15-07; published 9-13-07 [FR E7-18057]

West Virginia; comments due by 10-15-07; published 9-13-07 [FR E7-17876]

Pesticides; tolerances in food, animal feeds, and raw agricultural commodities:

Cis-isomer of 1-(3-chloroally)-3,5,7-triaza-1-azoniaadamantane chloride; comments due by 10-15-07; published 8-15-07 [FR E7-16055]

Commodity vocabulary data base; nomenclature changes; technical amendment; comments due by 10-18-07; published 9-18-07 [FR E7-18159]

Lambda-cyhalothrin; comments due by 10-15-07; published 8-15-07 [FR E7-16050]

Pyrasulfotole; comments due by 10-15-07; published 8-15-07 [FR E7-15698]

Zucchini yellow mosaic virus-weak strain; comments due by 10-15-07; published 8-15-07 [FR E7-16057]

Toxic substances:

Significant new uses—

Dodecandioic acid, 1, 12-dihydrazide, etc.; comments due by 10-19-07; published 9-19-07 [FR E7-18502]

FEDERAL COMMUNICATIONS COMMISSION

Radio broadcasting:

Digital audio broadcasting systems; limitations on subscription-based radio services; comments due by 10-15-07; published 8-15-07 [FR 07-03958]

Radio frequency devices:

57-64 GHz band; unlicensed devices; comments due by 10-17-07; published 7-19-07 [FR E7-13832]

Unlicensed devices and equipment approval; comments due by 10-15-07; published 8-1-07 [FR E7-14930]

Radio stations; table of assignments:

Illinois; comments due by 10-15-07; published 9-13-07 [FR E7-17866]

GENERAL SERVICES ADMINISTRATION

Federal Acquisition Regulation (FAR):

Accepting and dispensing of $1 coin; comments due by 10-16-07; published 8-17-07 [FR 07-03803]

Combating trafficking in persons; comments due by 10-16-07; published 8-17-07 [FR 07-03796]

Free trade agreements—

Bulgaria, Dominican Republic, and Romania; comments due by 10-16-07; published 8-17-07 [FR 07-03799]

Online Representations and Certifications Application Review; comments due by 10-16-07; published 8-17-07 [FR 07-03800]

HOMELAND SECURITY DEPARTMENT

Coast Guard

Drawbridge operations:

New York; comments due by 10-18-07; published 9-18-07 [FR E7-18302]

HOUSING AND URBAN DEVELOPMENT DEPARTMENT

Low-income housing:

Section 202 Supportive Housing for Elderly and Section 811 Persons with Disabilities Programs—

Project design and cost standards; comments due by 10-15-07; published 8-15-07 [FR E7-15962]

INTERIOR DEPARTMENT

Fish and Wildlife Service

Endangered and threatened species:

Findings on petitions, etc.—

Goose Creek milk-vetch; comments due by 10-15-07; published 8-16-07 [FR E7-16145]

National Wildlife Refuge System:

Commercial filming activities or similar projects; fee establishment, etc.; comments due by 10-19-07; published 8-20-07 [FR E7-15845]

INTERIOR DEPARTMENT

National Wildlife Refuge System:

Commercial filming activities or similar projects; fee establishment, etc.; comments due by 10-19-07; published 8-20-07 [FR E7-15845]

INTERIOR DEPARTMENT

National Park Service

National Wildlife Refuge System:

Commercial filming activities or similar projects; fee establishment, etc.; comments due by 10-19-07; published 8-20-07 [FR E7-15845]

INTERIOR DEPARTMENT

Reclamation Bureau

Use of Bureau of Reclamation land, facilities, and waterbodies; comments due by 10-16-07; published 7-18-07 [FR E7-13847]

INTERIOR DEPARTMENT

Surface Mining Reclamation and Enforcement Office

Surface coal mining and reclamation operations:

Permit application packages; comments due by 10-15-07; published 8-14-07 [FR E7-15930]

LABOR DEPARTMENT

Employee Benefits Security Administration

Employee Retirement Income Security Act:

Multiemployer pension plans; information availability; comments due by 10-15-07; published 9-14-07 [FR E7-18073]

NATIONAL AERONAUTICS AND SPACE ADMINISTRATION

Federal Acquisition Regulation (FAR):

Accepting and dispensing of $1 coin; comments due by 10-16-07; published 8-17-07 [FR 07-03803]

Combating trafficking in persons; comments due by 10-16-07; published 8-17-07 [FR 07-03796]

Free trade agreements—

Bulgaria, Dominican Republic, and Romania; comments due by 10-16-07; published 8-17-07 [FR 07-03799]

Online Representations and Certifications Application Review; comments due by 10-16-07; published 8-17-07 [FR 07-03800]

PERSONNEL MANAGEMENT OFFICE

Employment:

Disabled veteran documentation; comments due by 10-19-07; published 8-20-07 [FR E7-16285]

SOCIAL SECURITY ADMINISTRATION

Organization and procedures:

Prescribed applications, forms, and other publications; private printing; comments due by 10-15-07; published 8-16-07 [FR E7-16140]

STATE DEPARTMENT

Passports:

Expedited passport processing; consular services fee schedule; comments due by 10-15-07; published 8-16-07 [FR E7-16173]

TRANSPORTATION DEPARTMENT

Federal Aviation Administration

Aircraft:

Non fixed-winged aircraft; nationality and registration marks; comments due by 10-15-07; published 9-14-07 [FR E7-18197]

Airports:

Aviation safety inspector; access to air operation areas, secured areas, and security identification areas; comments due by 10-19-07; published 9-19-07 [FR E7-18349]

Airworthiness directives:

Airbus; comments due by 10-15-07; published 9-13-07 [FR E7-18046]

Boeing; comments due by 10-15-07; published 8-31-07 [FR E7-17294]

CTRM Aviation Sdn. Bhd.; comments due by 10-15-07; published 9-14-07 [FR E7-18148]

Dassault; comments due by 10-15-07; published 9-13-07 [FR E7-18045]

General Electric; comments due by 10-15-07; published 8-14-07 [FR E7-15701]

McDonnell Douglas; comments due by 10-15-07; published 8-31-07 [FR E7-17287]

Saab; comments due by 10-19-07; published 9-19-07 [FR E7-18478]

Class E airspace; comments due by 10-15-07; published 8-29-07 [FR E7-17068]

Restricted areas; comments due by 10-15-07; published 8-31-07 [FR E7-17361]

TRANSPORTATION DEPARTMENT

National Highway Traffic Safety Administration

Insurer reporting requirements:

Insurers required to file reports; list; comments due by 10-15-07; published 8-30-07 [FR E7-17149]

TREASURY DEPARTMENT

Internal Revenue Service

Income taxes:

Qualified zone academy bonds; obligations of States and political subdivisions; cross reference; comments due by 10-15-07; published 7-16-07 [FR E7-13663]

Procedure and administration:

Nonjudicial foreclosure sale and parties making administrative requests for return of wrongfully levied property; notification changes; comments due by 10-18-07; published 7-20-07 [FR E7-14051]

LIST OF PUBLIC LAWS

This is a continuing list of public bills from the current session of Congress which have become Federal laws. It may be used in conjunction with "P L U S" (Public Laws Update Service) on 202–741–6043. This list is also available online at *http://www.archives.gov/federal-register/laws.html*.

The text of laws is not published in the **Federal Register** but may be ordered in "slip law" (individual pamphlet) form from the Superintendent of Documents, U.S. Government Printing Office, Washington, DC 20402 (phone, 202–512–1808). The text will also be made available on the Internet from GPO Access at *http://www.gpoaccess.gov/plaws/index.html*. Some laws may not yet be available.

H.R. 3668/P.L. 110–90
TMA, Abstinence Education, and QI Programs Extension Act of 2007 (Sept. 29, 2007; 121 Stat. 984)

H.J. Res. 43/P.L. 110–91
Increasing the statutory limit on the public debt. (Sept. 29, 2007; 121 Stat. 988)

H.J. Res. 52/P.L. 110–92
Making continuing appropriations for the fiscal year 2008, and for other purposes. (Sept. 29, 2007; 121 Stat. 989)

H.R. 3625/P.L. 110–93
To make permanent the waiver authority of the Secretary of Education with respect to student financial assistance during a war or other military operation or national emergency. (Sept. 30, 2007; 121 Stat. 999)

Last List October 2, 2007

Public Laws Electronic Notification Service (PENS)

PENS is a free electronic mail notification service of newly enacted public laws. To subscribe, go to *http://listserv.gsa.gov/archives/publaws-l.html*

Note: This service is strictly for E-mail notification of new laws. The text of laws is not available through this service. **PENS** cannot respond to specific inquiries sent to this address.

CFR CHECKLIST

This checklist, prepared by the Office of the Federal Register, is published weekly. It is arranged in the order of CFR titles, stock numbers, prices, and revision dates.

An asterisk (*) precedes each entry that has been issued since last week and which is now available for sale at the Government Printing Office.

A checklist of current CFR volumes comprising a complete CFR set, also appears in the latest issue of the LSA (List of CFR Sections Affected), which is revised monthly.

The CFR is available free on-line through the Government Printing Office's GPO Access Service at http://www.gpoaccess.gov/cfr/index.html. For information about GPO Access call the GPO User Support Team at 1-888-293-6498 (toll free) or 202-512-1530.

The annual rate for subscription to all revised paper volumes is $1389.00 domestic, $555.60 additional for foreign mailing.

Mail orders to the Superintendent of Documents, Attn: New Orders, P.O. Box 371954, Pittsburgh, PA 15250–7954. All orders must be accompanied by remittance (check, money order, GPO Deposit Account, VISA, Master Card, or Discover). Charge orders may be telephoned to the GPO Order Desk, Monday through Friday, at **(202) 512–1800** from 8:00 a.m. to 4:00 p.m. eastern time, or FAX your charge orders to **(202) 512-2250**.

Title	Stock Number	Price	Revision Date
1	(869–062–00001–4)	5.00	[4] Jan. 1, 2007
2	(869–062–00002–2)	5.00	Jan. 1, 2007
3 (2006 Compilation and Parts 100 and 102)	(869–062–00003–1)	35.00	[1] Jan. 1, 2007
4	(869–062–00004–9)	10.00	[5] Jan. 1, 2007
5 Parts:			
1–699	(869–062–00005–7)	60.00	Jan. 1, 2007
700–1199	(869–062–00006–5)	50.00	Jan. 1, 2007
1200–End	(869–062–00007–3)	61.00	Jan. 1, 2007
6	(869–062–00008–1)	10.50	Jan. 1, 2007
7 Parts:			
1–26	(869–062–00009–0)	44.00	Jan. 1, 2007
27–52	(869–062–00010–3)	49.00	Jan. 1, 2007
53–209	(869–062–00011–1)	37.00	Jan. 1, 2007
210–299	(869–062–00012–0)	62.00	Jan. 1, 2007
300–399	(869–062–00013–8)	46.00	Jan. 1, 2007
400–699	(869–062–00014–6)	42.00	Jan. 1, 2007
700–899	(869–062–00015–4)	43.00	Jan. 1, 2007
900–999	(869–062–00016–2)	60.00	Jan. 1, 2007
1000–1199	(869–062–00017–1)	22.00	Jan. 1, 2007
1200–1599	(869–062–00018–9)	61.00	Jan. 1, 2007
1600–1899	(869–062–00019–7)	64.00	Jan. 1, 2007
1900–1939	(869–062–00020–1)	31.00	Jan. 1, 2007
1940–1949	(869–062–00021–9)	50.00	[5] Jan. 1, 2007
1950–1999	(869–062–00022–7)	46.00	Jan. 1, 2007
2000–End	(869–062–00023–5)	50.00	Jan. 1, 2007
8	(869–062–00024–3)	63.00	Jan. 1, 2007
9 Parts:			
1–199	(869–062–00025–1)	61.00	Jan. 1, 2007
200–End	(869–062–00026–0)	58.00	Jan. 1, 2007
10 Parts:			
1–50	(869–062–00027–8)	61.00	Jan. 1, 2007
51–199	(869–062–00028–6)	58.00	Jan. 1, 2007
200–499	(869–062–00029–4)	46.00	Jan. 1, 2007
500–End	(869–066–00030–8)	62.00	Jan. 1, 2007
11	(869–062–00031–6)	41.00	Jan. 1, 2007
12 Parts:			
1–199	(869–062–00032–4)	34.00	Jan. 1, 2007
200–219	(869–062–00033–2)	37.00	Jan. 1, 2007
220–299	(869–062–00034–1)	61.00	Jan. 1, 2007
300–499	(869–062–00035–9)	47.00	Jan. 1, 2007
500–599	(869–062–00036–7)	39.00	Jan. 1, 2007
600–899	(869–062–00037–5)	56.00	Jan. 1, 2007
900–End	(869–062–00038–3)	50.00	Jan. 1, 2007
13	(869–062–00039–1)	55.00	Jan. 1, 2007
14 Parts:			
1–59	(869–062–00040–5)	63.00	Jan. 1, 2007
60–139	(869–062–00041–3)	61.00	Jan. 1, 2007
140–199	(869–062–00042–1)	30.00	Jan. 1, 2007
200–1199	(869–062–00043–0)	50.00	Jan. 1, 2007
1200–End	(869–062–00044–8)	45.00	Jan. 1, 2007
15 Parts:			
0–299	(869–062–00045–6)	40.00	Jan. 1, 2007
300–799	(869–062–00046–4)	60.00	Jan. 1, 2007
800–End	(869–062–00047–2)	42.00	Jan. 1, 2007
16 Parts:			
0–999	(869–062–00048–1)	50.00	Jan. 1, 2007
1000–End	(869–062–00049–9)	60.00	Jan. 1, 2007
17 Parts:			
1–199	(869–062–00051–1)	50.00	Apr. 1, 2007
200–239	(869–062–00052–9)	60.00	Apr. 1, 2007
240–End	(869–062–00053–7)	62.00	Apr. 1, 2007
18 Parts:			
1–399	(869–062–00054–5)	62.00	Apr. 1, 2007
400–End	(869–062–00055–3)	26.00	Apr. 1, 2007
19 Parts:			
1–140	(869–062–00056–1)	61.00	Apr. 1, 2007
141–199	(869–062–00057–0)	58.00	Apr. 1, 2007
200–End	(869–062–00058–8)	31.00	Apr. 1, 2007
20 Parts:			
1–399	(869–062–00059–6)	50.00	Apr. 1, 2007
400–499	(869–062–00060–0)	64.00	Apr. 1, 2007
500–End	(869–062–00061–8)	63.00	Apr. 1, 2007
21 Parts:			
1–99	(869–062–00062–6)	40.00	Apr. 1, 2007
100–169	(869–062–00063–4)	49.00	Apr. 1, 2007
170–199	(869–062–00064–2)	50.00	Apr. 1, 2007
200–299	(869–062–00065–1)	17.00	Apr. 1, 2007
300–499	(869–062–00066–9)	30.00	Apr. 1, 2007
500–599	(869–062–00067–7)	47.00	Apr. 1, 2007
600–799	(869–062–00068–5)	17.00	Apr. 1, 2007
800–1299	(869–062–00069–3)	60.00	Apr. 1, 2007
1300–End	(869–062–00070–7)	25.00	Apr. 1, 2007
22 Parts:			
1–299	(869–062–00071–5)	63.00	Apr. 1, 2007
300–End	(869–062–00072–3)	45.00	Apr. 1, 2007
23	(869–062–00073–7)	45.00	Apr. 1, 2007
24 Parts:			
0–199	(869–062–00074–0)	60.00	Apr. 1, 2007
200–499	(869–062–00075–8)	50.00	Apr. 1, 2007
500–699	(869–062–00076–6)	30.00	Apr. 1, 2007
700–1699	(869–062–00077–4)	61.00	Apr. 1, 2007
1700–End	(869–062–00078–2)	30.00	Apr. 1, 2007
25	(869–062–00079–1)	64.00	Apr. 1, 2007
26 Parts:			
§§ 1.0–1–1.60	(869–062–00080–4)	49.00	Apr. 1, 2007
§§ 1.61–1.169	(869–062–00081–2)	63.00	Apr. 1, 2007
§§ 1.170–1.300	(869–062–00082–1)	60.00	Apr. 1, 2007
§§ 1.301–1.400	(869–062–00083–9)	47.00	Apr. 1, 2007
§§ 1.401–1.440	(869–062–00084–7)	56.00	Apr. 1, 2007
§§ 1.441–1.500	(869–062–00085–5)	58.00	Apr. 1, 2007
§§ 1.501–1.640	(869–062–00086–3)	49.00	Apr. 1, 2007
§§ 1.641–1.850	(869–062–00087–1)	61.00	Apr. 1, 2007
§§ 1.851–1.907	(869–062–00088–0)	61.00	Apr. 1, 2007
§§ 1.908–1.1000	(869–062–00089–8)	60.00	Apr. 1, 2007
§§ 1.1001–1.1400	(869–062–00090–1)	61.00	Apr. 1, 2007
§§ 1.1401–1.1550	(869–062–00091–0)	58.00	Apr. 1, 2007
§§ 1.1551–End	(869–062–00092–8)	50.00	Apr. 1, 2007
2–29	(869–062–00093–6)	60.00	Apr. 1, 2007
30–39	(869–062–00094–4)	41.00	Apr. 1, 2007
40–49	(869–062–00095–2)	28.00	[7] Apr. 1, 2007
50–299	(869–062–00096–1)	42.00	Apr. 1, 2007

Title	Stock Number	Price	Revision Date
300–499	(869–062–00097–9)	61.00	Apr. 1, 2007
500–599	(869–062–00098–7)	12.00	[6] Apr. 1, 2007
600–End	(869–062–00099–5)	17.00	Apr. 1, 2007
27 Parts:			
1–39	(869–062–00100–2)	64.00	Apr. 1, 2007
40–399	(869–062–00101–1)	64.00	Apr. 1, 2007
400–End	(869–062–00102–9)	18.00	Apr. 1, 2007
28 Parts:			
0–42	(869–062–00103–7)	61.00	July 1, 2007
*43–End	(869–062–00104–5)	60.00	July 1, 2007
29 Parts:			
0–99	(869–062–00105–3)	50.00	[9] July 1, 2007
100–499	(869–062–00106–1)	23.00	July 1, 2007
500–899	(869–062–00107–0)	61.00	[9] July 1, 2007
900–1899	(869–062–00108–8)	36.00	July 1, 2007
1900–1910 (§§ 1900 to 1910.999)	(869–062–00109–6)	61.00	July 1, 2007
1910 (§§ 1910.1000 to end)	(869–062–00110–0)	46.00	July 1, 2007
1911–1925	(869–062–00111–8)	30.00	July 1, 2007
1926	(869–062–00112–6)	50.00	July 1, 2007
1927–End	(869–062–00113–4)	62.00	July 1, 2007
30 Parts:			
*1–199	(869–062–00114–2)	57.00	July 1, 2007
*200–699	(869–062–00115–1)	50.00	July 1, 2007
700–End	(869–062–00116–9)	58.00	July 1, 2007
31 Parts:			
0–199	(869–062–00117–7)	41.00	July 1, 2007
200–499	(869–062–00118–5)	46.00	July 1, 2007
500–End	(869–060–00118–2)	62.00	July 1, 2006
32 Parts:			
1–39, Vol. I		15.00	[2] July 1, 1984
1–39, Vol. II		19.00	[2] July 1, 1984
1–39, Vol. III		18.00	[2] July 1, 1984
1–190	(869–062–00120–7)	61.00	July 1, 2007
191–399	(869–060–00120–4)	63.00	July 1, 2006
400–629	(869–060–00121–2)	50.00	July 1, 2006
630–699	(869–062–00123–1)	37.00	July 1, 2007
700–799	(869–062–00124–0)	46.00	July 1, 2007
800–End	(869–062–00125–8)	47.00	July 1, 2007
33 Parts:			
1–124	(869–060–00125–5)	57.00	July 1, 2006
125–199	(869–060–00126–3)	61.00	July 1, 2006
200–End	(869–062–00128–2)	57.00	July 1, 2007
34 Parts:			
1–299	(869–062–00129–1)	50.00	July 1, 2007
300–399	(869–062–00130–4)	40.00	July 1, 2007
400–End & 35	(869–060–00130–1)	61.00	[8] July 1, 2006
36 Parts:			
1–199	(869–062–00132–1)	37.00	July 1, 2007
200–299	(869–062–00133–9)	37.00	July 1, 2007
300–End	(869–060–00133–6)	61.00	July 1, 2006
***37**	(869–062–00135–5)	58.00	July 1, 2007
38 Parts:			
0–17	(869–062–00136–3)	60.00	July 1, 2007
18–End	(869–060–00136–1)	62.00	July 1, 2006
39	(869–062–00138–0)	42.00	July 1, 2007
40 Parts:			
1–49	(869–060–00138–7)	60.00	July 1, 2006
50–51	(869–062–00140–1)	45.00	July 1, 2007
52 (52.01–52.1018)	(869–062–00141–0)	60.00	July 1, 2007
52 (52.1019–End)	(869–062–00142–8)	64.00	July 1, 2007
53–59	(869–060–00142–5)	31.00	July 1, 2006
60 (60.1–End)	(869–062–00144–4)	58.00	July 1, 2007
60 (Apps)	(869–062–00145–2)	57.00	July 1, 2007
61–62	(869–062–00146–1)	45.00	July 1, 2007
63 (63.1–63.599)	(869–060–00146–8)	58.00	July 1, 2006
63 (63.600–63.1199)	(869–060–00147–6)	50.00	July 1, 2006
63 (63.1200–63.1439)	(869–060–00148–4)	50.00	July 1, 2006
63 (63.1440–63.6175)	(869–060–00149–2)	32.00	July 1, 2006
63 (63.6580–63.8830)	(869–060–00150–6)	32.00	July 1, 2006
63 (63.8980–End)	(869–060–00151–4)	35.00	July 1, 2006
*64–71	(869–062–00153–3)	29.00	July 1, 2007
72–80	(869–060–00153–1)	62.00	July 1, 2006
81–84	(869–062–00155–0)	50.00	July 1, 2007
85–86 (85–86.599–99)	(869–062–00156–8)	61.00	July 1, 2007
86 (86.600–1–End)	(869–060–00156–5)	50.00	July 1, 2006
87–99	(869–060–00157–3)	60.00	July 1, 2006
*100–135	(869–062–00159–2)	45.00	July 1, 2007
136–149	(869–060–00159–0)	61.00	July 1, 2006
150–189	(869–060–00160–3)	50.00	July 1, 2006
190–259	(869–062–00162–2)	39.00	[9] July 1, 2007
260–265	(869–060–00162–0)	50.00	July 1, 2006
266–299	(869–060–00163–8)	50.00	July 1, 2006
300–399	(869–060–00164–6)	42.00	July 1, 2006
400–424	(869–062–00166–5)	56.00	[9] July 1, 2007
425–699	(869–060–00166–2)	61.00	July 1, 2006
700–789	(869–062–00168–1)	61.00	July 1, 2007
790–End	(869–060–00168–9)	61.00	July 1, 2006
41 Chapters:			
1, 1–1 to 1–10		13.00	[3] July 1, 1984
1, 1–11 to Appendix, 2 (2 Reserved)		13.00	[3] July 1, 1984
3–6		14.00	[3] July 1, 1984
7		6.00	[3] July 1, 1984
8		4.50	[3] July 1, 1984
9		13.00	[3] July 1, 1984
10–17		9.50	[3] July 1, 1984
18, Vol. I, Parts 1–5		13.00	[3] July 1, 1984
18, Vol. II, Parts 6–19		13.00	[3] July 1, 1984
18, Vol. III, Parts 20–52		13.00	[3] July 1, 1984
19–100		13.00	[3] July 1, 1984
1–100	(869–060–00169–7)	24.00	July 1, 2006
101	(869–062–00171–1)	21.00	July 1, 2007
102–200	(869–062–00172–0)	56.00	July 1, 2007
201–End	(869–060–00172–7)	24.00	July 1, 2006
42 Parts:			
1–399	(869–060–00173–5)	61.00	Oct. 1, 2006
400–413	(869–060–00174–3)	32.00	Oct. 1, 2006
414–429	(869–060–00175–1)	32.00	Oct. 1, 2006
430–End	(869–060–00176–0)	64.00	Oct. 1, 2006
43 Parts:			
1–999	(869–060–00177–8)	56.00	Oct. 1, 2006
1000–end	(869–060–00178–6)	62.00	Oct. 1, 2006
44	(869–060–00179–4)	50.00	Oct. 1, 2006
45 Parts:			
1–199	(869–060–00180–8)	60.00	Oct. 1, 2006
200–499	(869–060–00181–6)	34.00	Oct. 1, 2006
500–1199	(869–060–00182–4)	56.00	Oct. 1, 2006
1200–End	(869–060–00183–2)	61.00	Oct. 1, 2006
46 Parts:			
1–40	(869–060–00184–1)	46.00	Oct. 1, 2006
41–69	(869–060–00185–9)	39.00	Oct. 1, 2006
70–89	(869–060–00186–7)	14.00	Oct. 1, 2006
90–139	(869–060–00187–5)	44.00	Oct. 1, 2006
140–155	(869–060–00188–3)	25.00	Oct. 1, 2006
156–165	(869–060–00189–1)	34.00	Oct. 1, 2006
166–199	(869–060–00190–5)	46.00	Oct. 1, 2006
200–499	(869–060–00191–3)	40.00	Oct. 1, 2006
500–End	(869–060–00192–1)	25.00	Oct. 1, 2006
47 Parts:			
0–19	(869–060–00193–0)	61.00	Oct. 1, 2006
20–39	(869–060–00194–8)	46.00	Oct. 1, 2006
40–69	(869–060–00195–6)	40.00	Oct. 1, 2006
70–79	(869–060–00196–4)	61.00	Oct. 1, 2006
80–End	(869–060–00197–2)	61.00	Oct. 1, 2006
48 Chapters:			
1 (Parts 1–51)	(869–060–00198–1)	63.00	Oct. 1, 2006
1 (Parts 52–99)	(869–060–00199–9)	49.00	Oct. 1, 2006
2 (Parts 201–299)	(869–060–00200–6)	50.00	Oct. 1, 2006
3–6	(869–060–00201–4)	34.00	Oct. 1, 2006

Title	Stock Number	Price	Revision Date
7–14	(869–060–00202–2)	56.00	Oct. 1, 2006
15–28	(869–060–00203–1)	47.00	Oct. 1, 2006
29–End	(869–060–00204–9)	47.00	Oct. 1, 2006
49 Parts:			
1–99	(869–060–00205–7)	60.00	Oct. 1, 2006
100–185	(869–060–00206–5)	63.00	Oct. 1, 2006
186–199	(869–060–00207–3)	23.00	Oct. 1, 2006
200–299	(869–060–00208–1)	32.00	Oct. 1, 2006
300–399	(869–060–00209–0)	32.00	Oct. 1, 2006
400–599	(869–060–00210–3)	64.00	Oct. 1, 2006
600–999	(869–060–00211–1)	19.00	Oct. 1, 2006
1000–1199	(869–060–00212–0)	28.00	Oct. 1, 2006
1200–End	(869–060–00213–8)	34.00	Oct. 1, 2006
50 Parts:			
1–16	(869–060–00214–6)	11.00	[10] Oct. 1, 2006
17.1–17.95(b)	(869–060–00215–4)	32.00	Oct. 1, 2006
17.95(c)–end	(869–060–00216–2)	32.00	Oct. 1, 2006
17.96–17.99(h)	(869–060–00217–1)	61.00	Oct. 1, 2006
17.99(i)–end and 17.100–end	(869–060–00218–9)	47.00	[10] Oct. 1, 2006
18–199	(869–060–00219–7)	50.00	Oct. 1, 2006
200–599	(869–060–00220–1)	45.00	Oct. 1, 2006
600–659	(869–060–00221–9)	31.00	Oct. 1, 2006
660–End	(869–060–00222–7)	31.00	Oct. 1, 2006
CFR Index and Findings Aids	(869–062–00050–2)	62.00	Jan. 1, 2007
Complete 2007 CFR set		1,389.00	2007
Microfiche CFR Edition:			
Subscription (mailed as issued)		332.00	2007
Individual copies		4.00	2007
Complete set (one-time mailing)		332.00	2006
Complete set (one-time mailing)		325.00	2005

[1] Because Title 3 is an annual compilation, this volume and all previous volumes should be retained as a permanent reference source.

[2] The July 1, 1985 edition of 32 CFR Parts 1–189 contains a note only for Parts 1–39 inclusive. For the full text of the Defense Acquisition Regulations in Parts 1–39, consult the three CFR volumes issued as of July 1, 1984, containing those parts.

[3] The July 1, 1985 edition of 41 CFR Chapters 1–100 contains a note only for Chapters 1 to 49 inclusive. For the full text of procurement regulations in Chapters 1 to 49, consult the eleven CFR volumes issued as of July 1, 1984 containing those chapters.

[4] No amendments to this volume were promulgated during the period January 1, 2005, through January 1, 2006. The CFR volume issued as of January 1, 2005 should be retained.

[5] No amendments to this volume were promulgated during the period January 1, 2006, through January 1, 2007. The CFR volume issued as of January 6, 2006 should be retained.

[6] No amendments to this volume were promulgated during the period April 1, 2000, through April 1, 2006. The CFR volume issued as of April 1, 2000 should be retained.

[7] No amendments to this volume were promulgated during the period April 1, 2006 through April 1, 2007. The CFR volume issued as of April 1, 2006 should be retained.

[8] No amendments to this volume were promulgated during the period July 1, 2005, through July 1, 2006. The CFR volume issued as of July 1, 2005 should be retained.

[9] No amendments to this volume were promulgated during the period July 1, 2006, through July 1, 2007. The CFR volume issued as of July 1, 2006 should be retained.

[10] No amendments to this volume were promulgated during the period October 1, 2005, through October 1, 2006. The CFR volume issued as of October 1, 2005 should be retained.