AUTHENTICATED U.S. GOVERNMENT INFORMATION GPO

Federal Register

11–21–07 Wednesday
Vol. 72 No. 224 Nov. 21, 2007

Pages 65441–65654

The **FEDERAL REGISTER** (ISSN 0097–6326) is published daily, Monday through Friday, except official holidays, by the Office of the Federal Register, National Archives and Records Administration, Washington, DC 20408, under the Federal Register Act (44 U.S.C. Ch. 15) and the regulations of the Administrative Committee of the Federal Register (1 CFR Ch. I). The Superintendent of Documents, U.S. Government Printing Office, Washington, DC 20402 is the exclusive distributor of the official edition. Periodicals postage is paid at Washington, DC.

The **FEDERAL REGISTER** provides a uniform system for making available to the public regulations and legal notices issued by Federal agencies. These include Presidential proclamations and Executive Orders, Federal agency documents having general applicability and legal effect, documents required to be published by act of Congress, and other Federal agency documents of public interest.

Documents are on file for public inspection in the Office of the Federal Register the day before they are published, unless the issuing agency requests earlier filing. For a list of documents currently on file for public inspection, see *www.archives.gov.*

The seal of the National Archives and Records Administration authenticates the Federal Register as the official serial publication established under the Federal Register Act. Under 44 U.S.C. 1507, the contents of the **Federal Register** shall be judicially noticed.

The **Federal Register** is published in paper and on 24x microfiche. It is also available online at no charge as one of the databases on GPO Access, a service of the U.S. Government Printing Office.

The online edition of the **Federal Register** *www.gpoaccess.gov/nara,* available through GPO Access, is issued under the authority of the Administrative Committee of the Federal Register as the official legal equivalent of the paper and microfiche editions (44 U.S.C. 4101 and 1 CFR 5.10). It is updated by 6 a.m. each day the **Federal Register** is published and includes both text and graphics from Volume 59, Number 1 (January 2, 1994) forward.

For more information about GPO Access, contact the GPO Access User Support Team, call toll free 1-888-293-6498; DC area 202-512-1530; fax at 202-512-1262; or via e-mail at *gpoaccess@gpo.gov.* The Support Team is available between 7:00 a.m. and 9:00 p.m. Eastern Time, Monday–Friday, except official holidays.

The annual subscription price for the **Federal Register** paper edition is $749 plus postage, or $808, plus postage, for a combined **Federal Register, Federal Register** Index and List of CFR Sections Affected (LSA) subscription; the microfiche edition of the **Federal Register** including the **Federal Register** Index and LSA is $165, plus postage. Six month subscriptions are available for one-half the annual rate. The prevailing postal rates will be applied to orders according to the delivery method requested. The price of a single copy of the daily **Federal Register,** including postage, is based on the number of pages: $11 for an issue containing less than 200 pages; $22 for an issue containing 200 to 400 pages; and $33 for an issue containing more than 400 pages. Single issues of the microfiche edition may be purchased for $3 per copy, including postage. Remit check or money order, made payable to the Superintendent of Documents, or charge to your GPO Deposit Account, VISA, MasterCard, American Express, or Discover. Mail to: U.S. Government Printing Office—New Orders, P.O. Box 979050, St. Louis, MO 63197-9000; or call toll free 1-866-512-1800, DC area 202-512-1800; or go to the U.S. Government Online Bookstore site, see *bookstore.gpo.gov.*

There are no restrictions on the republication of material appearing in the **Federal Register.**

How To Cite This Publication: Use the volume number and the page number. Example: 72 FR 12345.

Postmaster: Send address changes to the Superintendent of Documents, Federal Register, U.S. Government Printing Office, Washington, DC 20402, along with the entire mailing label from the last issue received.

SUBSCRIPTIONS AND COPIES

PUBLIC

Subscriptions:

Paper or fiche	**202–512–1800**
Assistance with public subscriptions	**202–512–1806**
General online information	**202–512–1530; 1–888–293–6498**

Single copies/back copies:

Paper or fiche	**202–512–1800**
Assistance with public single copies	**1–866–512–1800 (Toll-Free)**

FEDERAL AGENCIES

Subscriptions:

Paper or fiche	**202–741–6005**
Assistance with Federal agency subscriptions	**202–741–6005**

FEDERAL REGISTER WORKSHOP

THE FEDERAL REGISTER: WHAT IT IS AND HOW TO USE IT

FOR: Any person who uses the Federal Register and Code of Federal Regulations.

WHO: Sponsored by the Office of the Federal Register.

WHAT: Free public briefings (approximately 3 hours) to present:

1. The regulatory process, with a focus on the Federal Register system and the public's role in the development of regulations.

2. The relationship between the Federal Register and Code of Federal Regulations.

3. The important elements of typical Federal Register documents.

4. An introduction to the finding aids of the FR/CFR system.

WHY: To provide the public with access to information necessary to research Federal agency regulations which directly affect them. There will be no discussion of specific agency regulations.

WHEN: Tuesday, December 11, 2007
9:00 a.m.–Noon

WHERE: Office of the Federal Register
Conference Room, Suite 700
800 North Capitol Street, NW.
Washington, DC 20002

RESERVATIONS: (202) 741–6008

Printed on recycled paper.

Contents

Federal Register

Vol. 72, No. 224

Wednesday, November 21, 2007

Agricultural Marketing Service
NOTICES
Agency information collection activities; proposals, submissions, and approvals, 65557–65558

Agriculture Department
See Agricultural Marketing Service
See Animal and Plant Health Inspection Service
See Forest Service
NOTICES
Committees; establishment, renewal, termination, etc.:
National Agricultural, Research, Extension, Education, and Economics Advisory Board, 65557

Alcohol and Tobacco Tax and Trade Bureau
RULES
Alcohol, tobacco, and other excise taxes:
Tobacco products and cigarette papers and tubes; removal without tax payment for U.S. use in law enforcement activities, 65456–65457
Small Business Job Protection Act; implementation:
Wine; small domestic producer tax credit transfer and bond computation, 65452–65456
PROPOSED RULES
Alcohol; viticultural area designations:
Leona Valley, Los Angeles County, CA, 65489–65494
NOTICES
Agency information collection activities; proposals, submissions, and approvals, 65646–65647

Animal and Plant Health Inspection Service
NOTICES
Agency information collection activities; proposals, submissions, and approvals, 65558–65559
Committees; establishment, renewal, termination, etc.:
Foreign Animal and Poultry Diseases, Secretary's Advisory Committee, 65559–65560
Pest risk assessments:
Dropwort leaves with stems from—
South Korea, 65560–65561

Army Department
NOTICES
Environmental statements; record of decision:
Base realignment and closure—
Ft. Meade, MD, 65567

Arts and Humanities, National Foundation
See National Foundation on the Arts and the Humanities

Centers for Disease Control and Prevention
NOTICES
Agency information collection activities; proposals, submissions, and approvals, 65578–65580
Committees; establishment, renewal, termination, etc.:
Childhood Lead Poisoning Prevention Advisory Committee, 65580
Coordinating Center for Infectious Diseases—
Scientific Counselors Board, 65580

Centers for Medicare & Medicaid Services
NOTICES
Grants and cooperative agreements; availability, etc.:
Medicare—
Clinical Laboratory Services Competitive Bidding Demonstration project, 65581

Coast Guard
RULES
Ports and waterways safety; regulated navigation areas, safety zones, security zones, etc.:
Tinian, Northern Mariana Islands, 65459–65460
NOTICES
Committees; establishment, renewal, termination, etc.:
Houston-Galveston Area Maritime Security Committee, 65582
Louisville Area Maritime Security Committee, 65582–65583
Reports and guidance documents; availability, etc.:
Vessels from Cameroon arriving to United States; entry conditions imposition notification; policy enforcement, 65583–65584

Commerce Department
See Foreign-Trade Zones Board
See International Trade Administration
See National Oceanic and Atmospheric Administration
See National Telecommunications and Information Administration
NOTICES
Agency information collection activities; proposals, submissions, and approvals, 65562–65565

Commodity Futures Trading Commission
PROPOSED RULES
Federal speculative position limits; revision, 65483–65487

Defense Department
See Army Department

Drug Enforcement Administration
NOTICES
Agency information collection activities; proposals, submissions, and approvals, 65596–65597

Employee Benefits Security Administration
NOTICES
Employee benefit plans; class exemptions:
Claims and extensions of credit in connection with litigation; release, 65597–65603

Employment and Training Administration
NOTICES
Adjustment assistance; applications, determinations, etc.:
A.O. Smith Electrical Products Co., 65603
Dixie Consumer Products, LLC, 65604
Ford Motor Co., 65604
Glaxo Smith Kline, 65604–65605
Goodyear Tire & Rubber Co. et al., 65605–65606
Lake Erie Products et al., 65606–65607
Pfizer, Inc., 65608
Superior Studs, LLC, 65608

Energy Department
NOTICES
Meetings:
Biological and Environmental Research Advisory Committee, 65568
International Energy Agency Industry Advisory Board, 65568–65569

Environmental Protection Agency
RULES
Air quality implementation plans; approval and promulgation; various States:
Maine, 65462–65466
PROPOSED RULES
Air quality implementation plans; approval and promulgation; various States:
Maine, 65494
NOTICES
Agency information collection activities; proposals, submissions, and approvals, 65569–65571
Grants and cooperative agreements; availability, etc.:
State Innovation Program, 65571–65572
Pesticide registration, cancellation, etc.:
4-Aminopyridine, 65572–65573
Pyridate, 65573–65574
Reports and guidance documents; availability, etc.:
Pesticides—
Registration review; updated schedule, 65574–65576
Superfund; response and remedial actions, proposed settlements, etc.:
Universal Laboratories Site, MI, et al., 65576

Executive Office of the President
See Management and Budget Office
See Presidential Documents

Export-Import Bank
NOTICES
Meetings; Sunshine Act, 65576

Federal Aviation Administration
RULES
Airspace:
Objects affecting navigable space—
Colo Void Clause Coalition; antenna systems co-location; voluntary best practices; policy statement, 65449–65451
Airworthiness directives:
Bell Helicopter Textron Canada, 65443–65445
Boeing, 65446–65449
CFM International, S.A., 65445–65446
PROPOSED RULES
Airworthiness directives:
Bombardier, 65474–65478
McDonnell Douglas, 65471–65474, 65478–65480
SAAB, 65480–65482
NOTICES
Meetings:
RTCA, Inc., 65633–65634
RTCA Program Management Committee, 65633–65634

Federal Communications Commission
PROPOSED RULES
Common carrier services:
Hearing aid-compatible mobile handsets; American National Standards Institute Accredited Standards Committee petition, 65494–65508

Federal Deposit Insurance Corporation
NOTICES
Federal Deposit Insurance Act; implementation:
Deposit insurance assessments; 2008 designated reserve ratio, 65576–65577

Federal Emergency Management Agency
NOTICES
Agency information collection activities; proposals, submissions, and approvals, 65584–65586

Federal Highway Administration
NOTICES
Federal agency actions on proposed highways; judicial review claims:
Daggett County, UT; Browns Park Road project, 65634–65635

Federal Maritime Commission
NOTICES
Agreements filed, etc., 65577
Ocean transportation intermediary licenses:
Continental International et al., 65577
Sunship International, Inc., 65577

Federal Mine Safety and Health Review Commission
PROPOSED RULES
Freedom of Information Act; implementation, 65494

Federal Reserve System
NOTICES
Banks and bank holding companies:
Formations, acquisitions, and mergers, 65577–65578

Federal Transit Administration
NOTICES
Reports and guidance documents; availability, etc.:
National transit database—
Safety and Security Reporting Manual; amendments, 65636–65638
Urbanized area apportionments; strike adjustment policy, 65635–65636

Fish and Wildlife Service
NOTICES
Endangered and threatened species permit applications, determinations, etc., 65591
Meetings:
North American Wetlands Conservation Council, 65591–65592

Foreign-Trade Zones Board
NOTICES
Applications, hearings, determinations, etc.:
California
National Steel & Shipbuilding Company, 65563
Ohio, 65563

Forest Service
NOTICES
Environmental statements; notice of intent:
Umatilla National Forest, OR, 65561–65562

Geological Survey
NOTICES
Agency information collection activities; proposals, submissions, and approvals, 65592

Health and Human Services Department
See Centers for Disease Control and Prevention
See Centers for Medicare & Medicaid Services
NOTICES
Meetings:
American Health Information Community, 65578

Homeland Security Department
See Coast Guard
See Federal Emergency Management Agency
See Transportation Security Administration
See U.S. Citizenship and Immigration Services
See U.S. Customs and Border Protection
NOTICES
Meetings:
National Infrastructure Advisory Council, 65581

Housing and Urban Development Department
NOTICES
Agency information collection activities; proposals, submissions, and approvals, 65588–65591

Interior Department
See Fish and Wildlife Service
See Geological Survey
See National Park Service

International Trade Administration
NOTICES
Antidumping:
Chlorinated isocyanurates from—
China, 65563–65564
Light-walled rectangular pipe and tube from—
China, 65564

International Trade Commission
NOTICES
Import investigations:
Semi-fabricated copper and brass products sector and paper sector; Chinese government policies affecting U.S. trade, 65595–65596

Justice Department
See Drug Enforcement Administration
RULES
Organization, functions, and authority delegations:
Civil Trial Sections Chiefs, Federal Claims Section Court, et al.; civil claims compromise and closing, 65457–65459
NOTICES
Meetings:
Violence Against Women National Advisory Committee, 65596

Labor Department
See Employee Benefits Security Administration
See Employment and Training Administration
See Occupational Safety and Health Administration

Legal Services Corporation
NOTICES
Meetings; Sunshine Act, 65610

Management and Budget Office
NOTICES
Outpatient medical, dental, and pharmacy services furnished by DoD medical treatment facilities; recovery rates from tortiously liable third persons, 65629

Maritime Administration
NOTICES
Agency information collection activities; proposals, submissions, and approvals, 65638

Mine Safety and Health Federal Review Commission
See Federal Mine Safety and Health Review Commission

National Aeronautics and Space Administration
RULES
Patents and other intellectual property rights:
Foreign patent licensing regulations removed, 65451–65452

National Credit Union Administration
RULES
Credit unions:
Organization and operations—
Eligible obligations; purchase, sale, and pledge, 65441–65443

National Foundation on the Arts and the Humanities
NOTICES
Meetings:
International Exhibitions Federal Advisory Committee, 65610

National Highway Traffic Safety Administration
PROPOSED RULES
Motor carrier safety standards:
Fee schedule; U.S. cash deposits or obligations offer in lieu of sureties on DOT conformance bonds, 65532–65539
Motor vehicle safety standards:
School bus passenger crash protection requirements; upgrades, 65509–65532

National Oceanic and Atmospheric Administration
RULES
Fishery conservation and management:
Northeastern United States fisheries—
Summer flounder, 65466–65469
PROPOSED RULES
Fishery conservation and management:
Alaska; fisheries of Exclusive Economic Zone—
Bering Sea and Aleutian Islands groundfish, crab, salmon, and scallop, 65539–65556
Ocean and coastal resource management:
Marine sanctuaries—
Cordell Bank, Gulf of the Farallones, and Monterey Bay National Marine Sanctuaries, CA; limit on vessel discharges, 65483
NOTICES
Agency information collection activities; proposals, submissions, and approvals, 65564–65565
Committees; establishment, renewal, termination, etc.:
Channel Islands National Marine Sanctuary Advisory Council, 65565–65566
Natural resource damage assessments:
Diamond Alkali Superfund Site, NJ, 65566

National Park Service
NOTICES
Environmental statements; notice of intent:
Castle Nugent Farms, St. Croix, U.S. Virgin Islands; special resource study, 65593

Grants and cooperative agreements; availability, etc.:
Self-governance Tribes; non-BIA programs eligible for self-governance funding agreements; list, 65593–65595

National Telecommunications and Information Administration

NOTICES
Meetings:
Commerce Spectrum Management Advisory Committee, 65566–65567

Nuclear Regulatory Commission
PROPOSED RULES
Production and utilization facilities; domestic licensing:
Pressurized thermal shock events; alternate fracture toughness protection requirements, 65470
Radioactive material; packaging and transportation:
Safe transport of radioactive material; document availability, 65470–65471
NOTICES
Reports and guidance documents; availability, etc.:
B&W reactor plants; model safety evaluation relating to changes to end-state requirements for required actions, 65615–65629
Combustible gas control; boiling water reactor technical specification changes, 65610–65615

Occupational Safety and Health Administration
NOTICES
Agency information collection activities; proposals, submissions, and approvals, 65608–65610

Office of Management and Budget
See Management and Budget Office

Pension Benefit Guaranty Corporation
NOTICES
Agency information collection activities; proposals, submissions, and approvals, 65629–65630

Pipeline and Hazardous Materials Safety Administration
NOTICES
Agency information collection activities; proposals, submissions, and approvals, 65638–65644
Hazardous materials:
Special permit applications; list, 65644–65645
Special permit modification applications; list, 65645

Presidential Documents
PROCLAMATIONS
Special observances:
National Family Week (Proc. 8206), 65649–65652
EXECUTIVE ORDERS
ITER International Fusion Energy Organization; designating as a public international organization (EO 13451), 65653

Securities and Exchange Commission
NOTICES
Investment Company Act of 1940:
Kiewit Investment Fund LLLP, 65630–65631
Self-regulatory organizations; proposed rule changes:
NYSE Arca, Inc., 65631–65632

State Department
NOTICES
Committees; establishment, renewal, termination, etc.:
International Security Advisory Board, 65632–65633
Meetings:
International Economic Policy Advisory Committee, 65633

Surface Transportation Board
NOTICES
Railroad services abandonment:
Wisconsin Central Ltd., 65645–65646

Transportation Department
See Federal Aviation Administration
See Federal Highway Administration
See Federal Transit Administration
See Maritime Administration
See National Highway Traffic Safety Administration
See Pipeline and Hazardous Materials Safety Administration
See Surface Transportation Board

Transportation Security Administration
NOTICES
Maritime and land transportation security:
Transportation Worker Identification Credential; enrollment—
Boston, MA, et al., 65586–65587

Treasury Department
See Alcohol and Tobacco Tax and Trade Bureau

U.S. Citizenship and Immigration Services
NOTICES
Agency information collection activities; proposals, submissions, and approvals, 65587–65588
Immigration:
Cuban Family Reunification Parole Program, 65588

U.S. Customs and Border Protection
PROPOSED RULES
Passenger Vessel Services Act; non-coastwise-qualified vessels violation interpretation; Hawaiian coastwise cruises, 65487–65489

Veterans Affairs Department
RULES
Organization, functions, and authority delegations:
Contract Appeals Board; transfer of duties to GSA's Civilian Board of Contract Appeals, 65461–65462

Separate Parts In This Issue

Part II
Executive Office of the President, Presidential Documents, 65649–65653

Reader Aids
Consult the Reader Aids section at the end of this issue for phone numbers, online resources, finding aids, reminders, and notice of recently enacted public laws.

To subscribe to the Federal Register Table of Contents LISTSERV electronic mailing list, go to http://listserv.access.gpo.gov and select Online mailing list archives, FEDREGTOC-L, Join or leave the list (or change settings); then follow the instructions.

CFR PARTS AFFECTED IN THIS ISSUE

A cumulative list of the parts affected this month can be found in the Reader Aids section at the end of this issue.

3 CFR

Proclamations:
8206 65651

Executive Orders:
13451 65653

10 CFR

Proposed Rules:
50 65470
71 65470

12 CFR
701 65441

14 CFR
39 (3 documents) 65443, 65445, 65446
77 65449
1245 65451

Proposed Rules:
39 (5 documents) 65471, 65474, 65476, 65478, 65480

15 CFR

Proposed Rules:
922 65483

17 CFR

Proposed Rules:
150 65483

19 CFR

Proposed Rules:
4 65487

27 CFR
24 65452
45 65456

Proposed Rules:
9 65489

28 CFR
0 65457

29 CFR

Proposed Rules:
2702 65494

33 CFR
165 65459

38 CFR
1 65461
2 65461

40 CFR
52 65462

Proposed Rules:
52 65494

47 CFR

Proposed Rules:
2 65494
20 65494
68 65494

49 CFR

Proposed Rules:
571 65509
594 65532

50 CFR
648 65466

Proposed Rules:
679 65539

Rules and Regulations

Federal Register

Vol. 72, No. 224

Wednesday, November 21, 2007

This section of the FEDERAL REGISTER contains regulatory documents having general applicability and legal effect, most of which are keyed to and codified in the Code of Federal Regulations, which is published under 50 titles pursuant to 44 U.S.C. 1510.

The Code of Federal Regulations is sold by the Superintendent of Documents. Prices of new books are listed in the first FEDERAL REGISTER issue of each week.

NATIONAL CREDIT UNION ADMINISTRATION

12 CFR Part 701

RIN 3133–AD37

Purchase, Sale, and Pledge of Eligible Obligations

AGENCY: National Credit Union Administration (NCUA).

ACTION: Final rule.

SUMMARY: NCUA is amending its rule governing the purchase, sale, and pledge of eligible obligations by adding a conflict of interest provision substantially similar to the conflict of interest provision in NCUA's general lending rule. This addition will help ensure that decisions by a federal credit union (FCU) regarding the purchase, sale, and pledge of eligible obligations are made with the FCU's best interests in mind.

DATES: This final rule is effective December 21, 2007.

FOR FURTHER INFORMATION CONTACT: Annette Tapia or Frank Kressman, Staff Attorneys, Office of General Counsel, at the above address or telephone (703) 518–6540.

SUPPLEMENTARY INFORMATION:

A. Background

The NCUA continually reviews its regulations to ''update, clarify and simplify existing regulations and eliminate redundant and unnecessary provisions.'' NCUA Interpretive Rulings and Policy Statement (IRPS) 87–2, Developing and Reviewing Government Regulations. Under IRPS 87–2, NCUA conducts a rolling review of one-third of its regulations each year, involving both internal review and public comment. NCUA's 2006 review produced a recommendation to include a conflict of interest provision in the eligible obligations rule similar to the one in NCUA's general lending rule. 12 CFR 701.21(c)(8), 12 CFR 701.23.

B. Discussion

Generally, the eligible obligations rule implements the statutory provisions limiting the purchase, sale, and pledging of an eligible obligation, which is defined by the NCUA Board as a loan or group of loans. 12 U.S.C. 1757(13); 12 CFR 701.23. Subject to certain exceptions, the rule provides that an FCU may purchase eligible obligations, which the regulation defines as loans made to a member by another lender, from any source as long as the loans are ones the FCU is empowered to grant, up to an amount equal to 5% of its unimpaired capital and surplus. 12 CFR 701.23(b)(1). Exceptions in the rule include purchasing nonmember student and real estate secured loans for purposes of completing a loan pool for sale on the secondary market. In addition, loans purchased to complete a pool and loans purchased as part of an indirect lending or indirect leasing program are exempt from the 5% limit on eligible obligations.

The Board issued a proposed rule, with request for comments, to add a conflict of interest provision to the eligible obligations rule that is similar to the conflict provision in NCUA's general lending regulation. 72 FR 35207 (June 27, 2007), 12 CFR 701.21(c)(8)(i). The Board believes eligible obligation transactions, which involve the buying and selling of member loans, potentially present the same kinds of conflicts of interest as where an FCU is the original lender to its member. The proposal provided that an official, employee, or their immediate family members may not receive, directly or indirectly, any commission, fee or other compensation in connection with an eligible obligations transaction. The proposal was intended to help ensure FCUs make decisions concerning the purchase and sale of eligible obligations based on appropriate business considerations rather than any personal benefit to insiders.

C. Summary of Comments

NCUA received only five comments: Two from credit union trade associations, two from state leagues, and one from an FCU.

One of the trade associations stated it did not support the rule because NCUA had not supported ''the need'' for the rule, why it was proposed, or ''what problems it sought to address.'' The other trade association stated it recognized that ''self-dealing and insider benefit should not be a motivating factor in a credit union's business'' and generally supported the rule, emphasizing its strong support for the exceptions in the rule that allow various permissible payments.

One of the state leagues, while stating it agrees with ''the concept of avoiding conflicts of interest,'' thought it was ''an important issue'' that credit unions should address in an internal policy or guidelines. This same commenter stated it was not aware ''that there are any outstanding concerns,'' did not see the need for the rule and, therefore, did not support it. The other state league that commented stated that, although it knew ''of no immediate need for a conflict of interest provision regarding'' eligible obligations, it believed ''the clarity provided for in the proposed change benefits all affected parties and will help ensure that decisions * * * [are for] sound business considerations rather than any personal benefit to insiders.''

The FCU stated it did not feel the rule was necessary to ensure that FCUs make appropriate business decisions, questioned the need for the regulation, and contended the rule ''introduced an additional regulatory burden.'' This commenter asked, if the rule is finalized, that it be narrowly interpreted so as not to inhibit certain activities common in the secondary market and offered the example of credit union attendance at conferences with secondary market participants that include meals. This commenter stated the rule should be interpreted as applicable on a ''per transaction basis,'' meaning the determination should be whether there is prohibited compensation tied to the purchase or sale of a particular loan or group of loans.

Contrary to assertions in a couple of the comment letters, the Board believes the proposal clearly stated the basis for the proposed amendment: ''The Board believes eligible obligation transactions, which involve the buying and selling of member loans, potentially present the same kinds of conflicts of interest as where an FCU is the original lender to its member. For that reason, the Board proposes to add a conflict of interest

provision * * * similar to the conflict of interest provision in NCUA's general lending rule.'' 72 FR 35207, 35208 (June 27, 2007). Some commenters appear to equate the ''need'' for a rule with instances or evidence of actual problems having occurred. The Board has recognized the potential for conflicts in eligible obligations transactions exists, just as in general lending, and, therefore, believes it should not wait for inappropriate transactions to occur to establish a ''need'' for a conflicts provision. The amendment is essentially and simply a rule of conduct and does not create any additional regulatory burden, for example, by affecting the current limitations on eligible obligation purchases or requiring FCUs undertake any additional record keeping or disclosures. Finally, the Board concludes having a conflict of interest provision in the eligible obligations rule paralleling the provision in the general lending rule is good regulatory structure and, as one commenter noted, adds clarity beneficial to all parties engaging in eligible obligation transactions with FCUs.

The Board notes it intends the conflict of interest provision to remove the incentive for personal gain at the credit union's expense in connection with an eligible obligations transaction. For example, the rule does not prohibit a credit union employee from attending a secondary market conference for information gathering and other business purposes to enhance the credit union's ability to engage in prudent eligible obligations transactions. Rather, the rule will be interpreted in the context of particular transactions and seeks to prevent purchases of loans that are not in the credit union's best interest. The rule accomplishes this by prohibiting personal economic incentives, such as fees or commissions, from being part of a transaction. NCUA reiterates that there are numerous exceptions built into the rule that allow employees to receive compensation for their eligible obligations activities under controlled circumstances.

The Board adopts the proposed conflict of interest provision for the eligible obligations rule without change as a final rule.

Regulatory Procedures

Regulatory Flexibility Act

The Regulatory Flexibility Act requires NCUA to prepare an analysis to describe any significant economic impact a rule may have on a substantial number of small credit unions (those under ten million dollars in assets). This rule adds a conflict of interest provision to the eligible obligations rule. There is minimal regulatory burden associated with this and the rule will not have a significant economic impact on a substantial number of small credit unions. Therefore, a regulatory flexibility analysis is not required.

Paperwork Reduction Act

NCUA has determined that this rule will not increase paperwork requirements under the Paperwork Reduction Act of 1995 and regulations of the Office of Management and Budget.

Executive Order 13132

Executive Order 13132 encourages independent regulatory agencies to consider the impact of their actions on state and local interests. In adherence to fundamental federalism principles, NCUA, an independent regulatory agency as defined in 44 U.S.C. 3502(5), voluntarily complies with the executive order. This final rule will not have a substantial direct effect on the states, on the relationship between the national government and the states, or on the distribution of power and responsibilities among the various levels of government. NCUA has determined that this rule does not constitute a policy that has federalism implications for purposes of the executive order.

The Treasury and General Government Appropriations Act, 1999—Assessment of Federal Regulations and Policies on Families

NCUA has determined that this rule will not affect family well-being within the meaning of section 654 of the Treasury and General Government Appropriations Act, 1999, Pub. L. 105–277, 112 Stat. 2681 (1998).

Small Business Regulatory Enforcement Fairness Act

The Small Business Regulatory Enforcement Fairness Act of 1996 (Pub. L. 104–121) (SBREFA) provides generally for a congressional review of agency rules. A reporting requirement is triggered in instances where NCUA issues a final rule as defined by Section 551 of the Administrative Procedure Act. 5 U.S.C. 551. The Office of Management and Budget has determined this rule is not a major rule for purposes of SBREFA. As required by SBREFA, NCUA will file the appropriate reports with Congress and the General Accounting Office so this rule may be reviewed.

List of Subjects in 12 CFR Part 701

Conflict of interests, credit unions, eligible obligations, loans.

By the National Credit Union Administration Board on November 15, 2007.

Mary Rupp,

Secretary of the Board.

■ For the reasons discussed above, NCUA amends 12 CFR part 701 as follows:

PART 701—ORGANIZATION AND OPERATIONS OF FEDERAL CREDIT UNIONS

■ 1. The authority citation for part 701 continues to read as follows:

Authority: 12 U.S.C. 1752(5), 1755, 1756, 1757, 1759, 1761a, 1761b, 1766, 1767, 1782, 1784, 1787, and 1789. Section 701.6 is also authorized by 31 U.S.C. 3717. Section 701.31 is also authorized by 15 U.S.C. 1601 *et seq.*, 42 U.S.C. 1861 and 42 U.S.C. 3601–3610. Section 701.35 is also authorized by 42 U.S.C. 4311–4312.

■ 2. Section 701.23 is amended by adding new paragraph (g) to read as follows:

§ 701.23 Purchase, sale, and pledge of eligible obligations.

* * * * *

(g)(1) *Conflicts of interest.* No federal credit union official, employee, or their immediate family member may receive, directly or indirectly, any compensation in connection with that credit union's purchase, sale, or pledge of an eligible obligation under the provisions of § 701.23.

(2) *Permissible payments.* This section does not prohibit:

(i) A federal credit union's payment of salary to employees;

(ii) A federal credit union's payment of an incentive or bonus to an employee based on the credit union's overall financial performance;

(iii) A federal credit union's payment of an incentive or bonus to an employee, other than a senior management employee, in connection with that credit union's purchase, sale or pledge of an eligible obligation. This payment is permissible if the board of directors establishes a written policy and internal controls for the incentive or bonus program and monitors compliance with the policy and controls at least annually; and

(iv) Payment by a person other than the federal credit union of compensation to a volunteer official, non-senior management employee, or their immediate family member, for a service or activity performed outside the credit union provided that the federal credit union, the official, employee, or

their immediate family member has not made a referral.

(3) *Business associates and family members.* All transactions under this section with business associates or family members not specifically prohibited by paragraph (g)(1) of this section must be conducted at arm's length and in the interest of the federal credit union.

(4) *Definitions.* The definitions in § 701.21(c)(8)(ii) of this part apply to this section.

[FR Doc. E7–22709 Filed 11–20–07; 8:45 am]

BILLING CODE 7535–01–P

DEPARTMENT OF TRANSPORTATION

Federal Aviation Administration

14 CFR Part 39

[Docket No. FAA–2007–0176; Directorate Identifier 2007–SW–14–AD; Amendment 39–15263; AD 2007–23–17]

RIN 2120–AA64

Airworthiness Directives; Bell Helicopter Textron Canada Model 206A and 206B Helicopters

AGENCY: Federal Aviation Administration (FAA), Department of Transportation (DOT).

ACTION: Final rule; request for comments.

SUMMARY: We are adopting a new airworthiness directive (AD) for Bell Helicopter Textron Canada (BHTC) Model 206A and 206B helicopters. This AD results from mandatory continuing airworthiness information (MCAI) originated by an aviation authority to identify and correct an unsafe condition on an aviation product. The aviation authority of Canada, with which we have a bilateral agreement, states in the MCAI:

> Reevaluation of the structural analysis indicates the need for the removal from service of bolts in this application.

The removal of certain main rotor latch bolts is required because these bolts do not have a mandatory retirement life. Further evaluation has shown that these bolts fail prematurely due to fatigue. This fatigue failure may result in failure of the main rotor and subsequent loss of control of the helicopter. We are issuing this AD to require actions to correct this unsafe condition on these products.

DATES: This AD becomes effective December 6, 2007.

We must receive comments on this AD by January 22, 2008.

ADDRESSES: You may send comments by any of the following methods:

- *Federal eRulemaking Portal: http://www.regulations.gov.* Follow the instructions for submitting comments.
- *Fax:* 202–493–2251.
- *Mail:* U.S. Department of Transportation, Docket Operations, M–30, West Building Ground Floor, Room W12–140, 1200 New Jersey Avenue, SE., Washington, DC 20590.
- *Hand Delivery:* Deliver to U.S. Department of Transportation, Docket Operations, M–30, West Building Ground Floor, Room W12–140, 1200 New Jersey Avenue, SE., Washington, DC 20590 between 9 a.m. and 5 p.m., Monday through Friday, except Federal holidays.

Examining the AD Docket

You may examine the AD docket on the Internet at *http://www.regulations.gov;* or in person at the Docket Operations office between 9 a.m. and 5 p.m., Monday through Friday, except Federal holidays. The AD docket contains this AD, the economic evaluation, any comments received, and other information. The street address for the Docket Operations office (telephone (800) 647–5527) is in the **ADDRESSES** section. Comments will be available in the AD docket shortly after receipt.

FOR FURTHER INFORMATION CONTACT: Sharon Miles, Aviation Safety Engineer, FAA, Rotorcraft Directorate, Regulations and Guidance Group, Fort Worth, Texas 76193–0111, telephone (817) 222–5122, fax (817) 222–5961.

SUPPLEMENTARY INFORMATION:

Streamlined Issuance of AD

The FAA is implementing a new process for streamlining the issuance of ADs related to MCAI. This streamlined process will allow us to adopt MCAI safety requirements in a more efficient manner and will reduce safety risks to the public. This process continues to follow all FAA AD issuance processes to meet legal, economic, Administrative Procedure Act, and **Federal Register** requirements. We also continue to meet our technical decision-making responsibilities to identify and correct unsafe conditions on U.S.-certificated products.

This AD references the MCAI and related service information that we considered in forming the engineering basis to correct the unsafe condition. The AD may contain text copied from the MCAI and for this reason might not follow our plain language principles.

Discussion

Transport Canada, which is the aviation authority for Canada, has issued Airworthiness Directive No. CF–2006–23R1, dated March 12, 2007 (referred to after this as ''the MCAI''), to correct an unsafe condition for these Canadian-certificated products.

The MCAI states:

> Reevaluation of the structural analysis indicates the need for the removal from service of bolts in this application.

The removal of certain main rotor latch bolts is required because these bolts do not have a mandatory retirement life. Further evaluation has shown that these bolts fail prematurely due to fatigue. This fatigue failure may result in failure of the main rotor and subsequent loss of control of the helicopter. We are issuing this AD to require actions to correct this unsafe condition on these products.

You may obtain further information by examining the MCAI in the AD docket.

Relevant Service Information

Bell Helicopter Textron has issued Alert Service Bulletin No. 206–06–109, dated July 25, 2006. The actions described in this MCAI are intended to correct the same unsafe condition identified in the service information.

FAA's Determination and Requirements of This AD

This product has been approved by the aviation authority of Canada, and is approved for operation in the United States. Pursuant to our bilateral agreement with this State of Design Authority, we have been notified of the unsafe condition described in the MCAI and the referenced service information. We are issuing this AD because we evaluated all pertinent information and determined the unsafe condition exists and is likely to exist or develop on other products of the same type design. The removal of certain bolts is required within 30 days because these bolts do not have a mandatory retirement life. Further evaluation has shown that these bolts fail prematurely due to fatigue. This fatigue failure may result in failure of the main rotor and subsequent loss of the helicopter. We are issuing this AD to require actions to correct this unsafe condition on these products.

Differences Between the AD and the MCAI or Service Information

We have reviewed the MCAI and related service information and, in general, agree with their substance. But we might have found it necessary to use different words from those in the MCAI to ensure the AD is clear for U.S. operators and is enforceable. In making these changes, we do not intend to differ substantively from the information provided in the MCAI and related service information.

We might also have required different actions in this AD from those in the MCAI in order to follow FAA policies. Any such differences are highlighted in the ''Differences Between the FAA AD and the MCAI'' section within the AD.

FAA's Determination of the Effective Date

An unsafe condition exists that requires the immediate adoption of this AD. The FAA has found that the risk to the flying public justifies waiving notice and comment prior to adoption of this rule because the affected bolts may fail prematurely due to fatigue. This fatigue failure may result in failure of the main rotor and subsequent loss of the helicopter. Therefore, we determined that notice and opportunity for public comment before issuing this AD are impracticable and that good cause exists for making this amendment effective in fewer than 30 days.

Comments Invited

This AD is a final rule that involves requirements affecting flight safety, and we did not precede it by notice and opportunity for public comment. We invite you to send any written relevant data, views, or arguments about this AD. Send your comments to an address listed under the **ADDRESSES** section. Include ''Docket No. FAA–2007–0176; Directorate Identifier 2007–SW–14–AD'' at the beginning of your comments. We specifically invite comments on the overall regulatory, economic, environmental, and energy aspects of this AD. We will consider all comments received by the closing date and may amend this AD because of those comments.

We will post all comments we receive, without change, to *http://www.regulations.gov,* including any personal information you provide. We will also post a report summarizing each substantive verbal contact we receive about this AD.

Cost of Compliance

We estimate this proposed AD would affect about 1463 products of U.S. registry. We also estimate that it would take about 6 work hours per helicopter to replace affected bolts if not done as part of the scheduled main rotor hub disassembly. The average labor rate is $80 per work-hour. Required parts would cost about $1414 per helicopter. Based on these figures, we estimate the cost of the proposed AD on U.S. operators to be $2,770,992, or $1894 per helicopter.

Authority for This Rulemaking

Title 49 of the United States Code specifies the FAA's authority to issue rules on aviation safety. Subtitle I, section 106, describes the authority of the FAA Administrator. ''Subtitle VII: Aviation Programs,'' describes in more detail the scope of the Agency's authority.

We are issuing this rulemaking under the authority described in ''Subtitle VII, Part A, Subpart III, Section 44701: General requirements.'' Under that section, Congress charges the FAA with promoting safe flight of civil aircraft in air commerce by prescribing regulations for practices, methods, and procedures the Administrator finds necessary for safety in air commerce. This regulation is within the scope of that authority because it addresses an unsafe condition that is likely to exist or develop on products identified in this rulemaking action.

Regulatory Findings

We determined that this AD will not have federalism implications under Executive Order 13132. This AD will not have a substantial direct effect on the States, on the relationship between the national government and the States, or on the distribution of power and responsibilities among the various levels of government.

For the reasons discussed above, I certify this AD:

1. Is not a ''significant regulatory action'' under Executive Order 12866;

2. Is not a ''significant rule'' under the DOT Regulatory Policies and Procedures (44 FR 11034, February 26, 1979); and

3. Will not have a significant economic impact, positive or negative, on a substantial number of small entities under the criteria of the Regulatory Flexibility Act.

We prepared an economic evaluation of the estimated costs to comply with this AD and placed it in the AD docket.

List of Subjects in 14 CFR Part 39

Air transportation, Aircraft, Aviation safety, Safety.

Adoption of the Amendment

■ Accordingly, under the authority delegated to me by the Administrator, the FAA amends 14 CFR part 39 as follows:

PART 39—AIRWORTHINESS DIRECTIVES

■ 1. The authority citation for part 39 continues to read as follows:

Authority: 49 U.S.C. 106(g), 40113, 44701.

§ 39.13 [Amended]

■ 2. The FAA amends § 39.13 by adding the following new AD:

2007–23–17 Bell Helicopter Textron Canada: Amendment 39–15263. Docket No. FAA–2007–0176; Directorate Identifier 2007–SW–14–AD.

Effective Date

(a) This airworthiness directive (AD) becomes effective December 6, 2007.

Other Affected ADs

(b) None.

Applicability

(c) This AD applies to Model 206A and 206B helicopters, up to and including serial number 3216, with a main rotor latch bolt, part number 206–010–169–001, 206–010–169–003, or 206–011–122–003, certificated in any category.

Reason

(d) The mandatory continued airworthiness information (MCAI) states:

Reevaluation of the structural analysis indicates the need for the removal from service of bolts in this application.

The removal of certain main rotor latch bolts is required because these bolts do not have a mandatory retirement life. Further evaluation has shown that these bolts fail prematurely due to fatigue. This fatigue failure may result in failure of the main rotor and subsequent loss of the helicopter.

Actions and Compliance

(e) Within 30 days, remove from service each main rotor latch bolt that has a P/N that is included in the applicability of this AD and replace it with an airworthy bolt.

Differences Between the FAA AD and the MCAI

(f) None.

Subject

(g) Air Transport Association of America (ATA) Code: 6200 Main Rotor System.

Other Information

(h) The following information also applies to this AD:

(1) *Alternative Methods of Compliance (AMOCs):* The Manager, Rotorcraft Directorate, Safety Management Group, FAA, has the authority to approve AMOCs for this AD, if requested using the procedures found in 14 CFR 39.19. Send information to ATTN: Sharon Miles, Aviation Safety Engineer, Regulations and Guidance Group, Fort Worth, Texas 76193–0111, telephone (817) 222–5122, fax (817) 222–5961.

(2) *Airworthy Product:* Use only FAA approved corrective actions. Corrective actions are considered FAA-approved if they are approved by the State of Design Authority (or their delegated agent) if the State of Design has an appropriate bilateral agreement with the United States. You are required to assure the product is airworthy before it is returned to service.

(3) *Reporting Requirements:* For any reporting requirement in this AD, under the provisions of the Paperwork Reduction Act,

the Office of Management and Budget (OMB) has approved the information collection requirements and has assigned OMB Control Number 2120–0056.

Related Information

(i) Mandatory continuing Airworthiness Information (MCAI) Transport Canada Airworthiness Directive No. CF–2006–23–R1, dated March 12, 2007, and Bell Helicopter Textron Alert Service Bulletin No. 206–06–109, dated July 25, 2006, contain related information.

Issued in Fort Worth, Texas, on November 2, 2007.

David A. Downey,

Manager, Rotorcraft Directorate, Aircraft Certification Service.

[FR Doc. E7–22415 Filed 11–20–07; 8:45 am]

BILLING CODE 4910–13–P

DEPARTMENT OF TRANSPORTATION

Federal Aviation Administration

14 CFR Part 39

[Docket No. FAA–2007–0108; Directorate Identifier 2001–NE–15–AD; Amendment 39–15270; AD 2007–24–04]

RIN 2120–AA64

Airworthiness Directives; CFM International, S.A. CFM56–5C4/1 Series Turbofan Engines

AGENCY: Federal Aviation Administration (FAA), Department of Transportation (DOT).

ACTION: Final rule; request for comments.

SUMMARY: The FAA is superseding an existing airworthiness directive (AD) for CFM International, S.A. CFM56–5C4/1 series turbofan engines. That AD currently requires that the low pressure turbine (LPT) conical support, part number (P/N) 337–002–407–0, be removed from service at or before reaching the cyclic life limit of 9,350 cycles-since-new (CSN). This AD requires that the same P/N LPT conical support be removed from service before reaching the new, relaxed cyclic life limit of 20,000 CSN. This AD results from CFM International, S.A. performing a life extension study of the LPT conical support, P/N 337–002–407–0. We are issuing this AD to prevent LPT conical supports from remaining in service beyond their certified cyclic life limit, which could result in an uncontained engine failure and damage to the airplane.

DATES: Effective December 6, 2007.

We must receive any comments on this AD by January 22, 2008.

ADDRESSES: Use one of the following addresses to comment on this AD:

- *Federal eRulemaking Portal:* Go to *http://www.regulations.gov* and follow the instructions for sending your comments electronically.
- *Mail:* U.S. Docket Management Facility, Department of Transportation, 1200 New Jersey Avenue, SE., West Building Ground Floor, Room W12–140, Washington, DC 20590–0001.
- *Hand Delivery:* Deliver to Mail address above between 9 a.m. and 5 p.m., Monday through Friday, except Federal holidays.
- *Fax:* (202) 493–2251.

FOR FURTHER INFORMATION CONTACT: Stephen Sheely, Aerospace Engineer, Engine Certification Office, FAA, Engine and Propeller Directorate, 12 New England Executive Park, Burlington, MA 01803; *e-mail: stephen.k.sheely@faa.gov*; telephone (781) 238–7750; fax (781) 238–7199.

SUPPLEMENTARY INFORMATION: On August 15, 2001, we issued AD 2001–17–14, Amendment 39–12405 (66 FR 44297, August 23, 2001). That AD requires that the CFM56–5C4/1 series turbofan engine LPT conical support, P/N 337–002–407–0, be removed from service at or before reaching the cyclic life limit of 9,350 CSN. That AD was the result of the discovery of an error in the Time Limits Section of Chapter 5 of the CFM56–5C Engine Shop Manual. The manual incorrectly listed the published cyclic life limit of the CFM56–5C4/1 turbofan engine LPT conical support, P/N 337–002–407–0, as 15,000 CSN, rather than the certified value of 9,350 CSN.

Actions Since We Issued AD 2001–17–14

Since we issued AD 2001–17–14, CFM International, S.A. performed a life extension study of the CFM56–5C4/1 engine LPT conical support, P/N 337–002–407–0. The results of the study show that the calculated cyclic life limit is above 20,000 CSN. Based on the study, CFM International, S.A. has now established a relaxed certified cyclic life limit of 20,000 CSN for this part.

FAA's Determination and Requirements of This AD

Although no airplanes that are registered in the United States use these CFM56–5C4/1 turbofan engines, the possibility exists that the engines could be used on airplanes that are registered in the United States in the future. The unsafe condition described previously is likely to exist or develop on other turbofan engines of the same type design. We are issuing this AD to prevent LPT conical supports from remaining in service beyond their certified cyclic life limit, which could result in an uncontained engine failure and damage to the airplane. This AD requires that the CFM56–5C4/1 series turbofan engine LPT conical support, P/N 337–002–407–0, be removed from service at or before reaching the new, relaxed cyclic life limit of 20,000 CSN.

Applicability Paragraph Correction

In AD 2001–17–14, we incorrectly stated that the engines were installed on, but not limited to, Airbus A320 series airplanes. In this AD we corrected the airplane model to A340 series airplanes.

FAA's Determination of the Effective Date

Since there are currently no domestic operators of this engine model, notice and opportunity for public comment before issuing this AD are unnecessary. Therefore, a situation exists that allows the immediate adoption of this regulation.

Comments Invited

This AD is a final rule that involves requirements affecting flight safety and was not preceded by notice and an opportunity for public comment; however, we invite you to send us any written relevant data, views, or arguments regarding this AD. Send your comments to an address listed under **ADDRESSES**. Include ''AD Docket No. FAA–2007–0108; Directorate Identifier 2001–NE–15–AD'' in the subject line of your comments. We specifically invite comments on the overall regulatory, economic, environmental, and energy aspects of the rule that might suggest a need to modify it.

We will post all comments we receive, without change, to *http://www.regulations.gov,* including any personal information you provide. We will also post a report summarizing each substantive verbal contact with FAA personnel concerning this AD. Using the search function of the Federal Docket Management System Web site, anyone can find and read the comments in any of our dockets, including the name of the individual who sent the comment (or signed the comment on behalf of an association, business, labor union, etc). You may review the DOT's complete Privacy Act Statement in the **Federal Register** published on April 11, 2000 (65 FR 19477–19478).

Examining the AD Docket

You may examine the AD docket on the Internet at *http://www.regulations.gov*; or in person at the Docket Operations office between 9 a.m. and 5 p.m., Monday through Friday,

except Federal holidays. The AD docket contains this AD, the regulatory evaluation, any comments received, and other information. The street address for the Docket Operations office (telephone (800) 647–5527) is the same as the Mail address provided in the **ADDRESSES** section. Comments will be available in the AD docket shortly after receipt.

Docket Number Change

We are transferring the docket for this AD to the Federal Docket Management System as part of our on-going docket management consolidation efforts. The new Docket No. is FAA–2007–0108. The old Docket No. became the Directorate Identifier, which is 2001–NE–15–AD.

Authority for This Rulemaking

Title 49 of the United States Code specifies the FAA's authority to issue rules on aviation safety. Subtitle I, Section 106, describes the authority of the FAA Administrator. Subtitle VII, Aviation Programs, describes in more detail the scope of the Agency's authority.

We are issuing this rulemaking under the authority described in Subtitle VII, Part A, Subpart III, Section 44701, ''General requirements.'' Under that section, Congress charges the FAA with promoting safe flight of civil aircraft in air commerce by prescribing regulations for practices, methods, and procedures the Administrator finds necessary for safety in air commerce. This regulation is within the scope of that authority because it addresses an unsafe condition that is likely to exist or develop on products identified in this rulemaking action.

Regulatory Findings

We have determined that this AD will not have federalism implications under Executive Order 13132. This AD will not have a substantial direct effect on the States, on the relationship between the national Government and the States, or on the distribution of power and responsibilities among the various levels of government.

For the reasons discussed above, I certify that this AD:

1. Is not a ''significant regulatory action'' under Executive Order 12866;
2. Is not a ''significant rule'' under the DOT Regulatory Policies and Procedures (44 FR 11034, February 26, 1979); and
3. Will not have a significant economic impact, positive or negative, on a substantial number of small entities under the criteria of the Regulatory Flexibility Act.

We prepared a summary of the costs to comply with this AD and placed it in the AD Docket. You may get a copy of this summary at the address listed under **ADDRESSES**.

List of Subjects in 14 CFR Part 39

Air transportation, Aircraft, Aviation safety, Safety.

Adoption of the Amendment

■ Under the authority delegated to me by the Administrator, the Federal Aviation Administration amends part 39 of the Federal Aviation Regulations (14 CFR part 39) as follows:

PART 39—AIRWORTHINESS DIRECTIVES

■ 1. The authority citation for part 39 continues to read as follows:

Authority: 49 U.S.C. 106(g), 40113, 44701.

§ 39.13 [Amended]

■ 2. The FAA amends § 39.13 by removing Amendment 39–12405 (66 FR 44297, August 23, 2001), and by adding a new airworthiness directive, Amendment 39–15270, to read as follows:

2007–24–04 CFM International, S.A.: Amendment 39–15270. Docket No. FAA–2007–0108; Directorate Identifier 2001–NE–15–AD.

Effective Date

(a) This airworthiness directive (AD) becomes effective December 6, 2007.

Affected ADs

(b) This AD supersedes AD 2001–17–14, Amendment 39–12405.

Applicability

(c) This AD applies to CFM International, S.A. CFM56–5C4/1 series turbofan engines with low pressure turbine (LPT) conical support, part number (P/N) 337–002–407–0, installed. These engines are installed on, but not limited to, Airbus A340 series airplanes.

Unsafe Condition

(d) This AD results from CFM International, S.A. performing a life extension study of the LPT conical support, P/N 337–002–407–0. We are issuing this AD to prevent LPT conical supports from remaining in service beyond their certified cyclic life limit, which could result in an uncontained engine failure and damage to the airplane.

Compliance

(e) You are responsible for having the actions required by this AD performed within the compliance times specified unless the actions have already been done.

(f) Remove LPT conical support, P/N 337–002–407–0, at or before accumulating 20,000 cycles-since-new (CSN) and replace with a serviceable part.

(g) After the effective date of this AD, do not install any LPT conical support, P/N 337–002–407–0, with 20,000 or more CSN, into CFM56–5C4/1 series turbofan engines.

Alternative Methods of Compliance

(h) The Manager, Engine Certification Office, has the authority to approve alternative methods of compliance for this AD if requested using the procedures found in 14 CFR 39.19.

Material Incorporated by Reference

(i) None.

Related Information

(j) Contact Stephen Sheely, Aerospace Engineer, Engine Certification Office, FAA, Engine and Propeller Directorate, 12 New England Executive Park, Burlington, MA 01803; e-mail: *stephen.k.sheely@faa.gov;* telephone (781) 238–7750; fax (781) 238–7199, for more information about this AD.

Issued in Burlington, Massachusetts, on November 14, 2007.

Peter A. White,

Assistant Manager, Engine and Propeller Directorate, Aircraft Certification Service.

[FR Doc. E7–22647 Filed 11–20–07; 8:45 am]

BILLING CODE 4910–13–P

DEPARTMENT OF TRANSPORTATION

Federal Aviation Administration

14 CFR Part 39

[Docket No. FAA–2007–0211; Directorate Identifier 2007–NM–221–AD; Amendment 39–15268; AD 2007–24–02]

RIN 2120–AA64

Airworthiness Directives; Boeing Model 737–100, –200, –200C, –300, –400, and –500 Series Airplanes

AGENCY: Federal Aviation Administration (FAA), Department of Transportation (DOT).

ACTION: Final rule; request for comments.

SUMMARY: The FAA is superseding an existing airworthiness directive (AD) that applies to all Model 737–100, –200, –200C, –300, –400, and –500 series airplanes. The existing AD currently requires repetitive detailed inspections for damage of the electrical wire and sleeve that run to the fuel boost pump through a conduit in the fuel tank, and arcing damage of the conduit and signs of fuel leakage into the conduit; replacement of the sleeve with a new, smaller-diameter sleeve; and related investigative and corrective actions, as applicable. This new AD reduces the inspection threshold for certain airplanes. This AD results from a report of a fuel tank explosion on a Model 727–200F airplane on the ground, and a report of chafed wires and a damaged power cable sleeve of a fuel boost pump discovered during an inspection on a Model 737–300 airplane. (The fuel boost

pump installation on certain Model 737 airplanes is almost identical to the installation on Model 727 airplanes.) We are issuing this AD to detect and correct chafing of the fuel boost pump electrical wiring and leakage of fuel into the conduit, and to prevent electrical arcing between the wiring and the surrounding conduit, which could result in arc-through of the conduit, and consequent fire or explosion of the fuel tank.

DATES: This AD becomes effective December 6, 2007.

The Director of the Federal Register approved the incorporation by reference of a certain publication listed in the AD as of December 6, 2007.

On June 6, 2007 (72 FR 28597, May 22, 2007), the Director of the Federal Register approved the incorporation by reference of Boeing Alert Service Bulletin 737–28A1263, Revision 1, dated March 19, 2007.

We must receive any comments on this AD by January 22, 2008.

ADDRESSES: You may send comments by any of the following methods:

- *Federal eRulemaking Portal:* Go to *http://www.regulations.gov.* Follow the instructions for submitting comments.
- *Fax:* 202–493–2251.
- *Mail:* U.S. Department of Transportation, Docket Operations, M–30, West Building Ground Floor, Room W12–140, 1200 New Jersey Avenue, SE., Washington, DC 20590.
- *Hand Delivery:* U.S. Department of Transportation, Docket Operations, M–30, West Building Ground Floor, Room W12–140, 1200 New Jersey Avenue, SE., Washington, DC 20590, between 9 a.m. and 5 p.m., Monday through Friday, except Federal holidays.

For service information identified in this AD, contact Boeing Commercial Airplanes, P.O. Box 3707, Seattle, Washington 98124–2207.

Examining the AD Docket

You may examine the AD docket on the Internet at *http://www.regulations.gov*; or in person at the Docket Management Facility between 9 a.m. and 5 p.m., Monday through Friday, except Federal holidays. The AD docket contains this AD, the regulatory evaluation, any comments received, and other information. The street address for the Docket Office (telephone 800–647–5527) is in the **ADDRESSES** section. Comments will be available in the AD docket shortly after receipt.

FOR FURTHER INFORMATION CONTACT: Suzanne Lucier, Aerospace Engineer, Propulsion Branch, ANM–140S, FAA, Seattle Aircraft Certification Office, 1601 Lind Avenue SW., Renton, Washington 98057–3356; telephone (425) 917–6438; fax (425) 917–6590.

SUPPLEMENTARY INFORMATION:

Discussion

On May 2, 2007, we issued AD 2007–11–07, amendment 39–15064 (72 FR 28597, May 22, 2007). (A correction of that AD was published in the **Federal Register** on August 21, 2007 (72 FR 46559).) That AD applies to all Boeing Model 737–100, –200, –200C, –300, –400, and –500 series airplanes. That AD requires repetitive detailed inspections for damage of the electrical wire and sleeve that run to the fuel boost pump through a conduit in the fuel tank, and arcing damage of the conduit and signs of fuel leakage into the conduit; replacement of the sleeve with a new, smaller-diameter sleeve; and related investigative and corrective actions, as applicable. That AD resulted from a report of a fuel tank explosion on a Model 727–200F airplane on the ground, and a report of chafed wires and a damaged power cable sleeve of a fuel boost pump discovered during an inspection on a Model 737–300 airplane. The actions specified in that AD are intended to detect and correct chafing of the fuel boost pump electrical wiring and leakage of fuel into the conduit, and to prevent electrical arcing between the wiring and the surrounding conduit, which could result in arc-through of the conduit, and consequent fire or explosion of the fuel tank.

Actions Since AD Was Issued

Since we issued AD 2007–11–07, we were contacted by an operator who misinterpreted the compliance threshold in a way that was not intended. Therefore, we are issuing this new AD to restate certain compliance thresholds in a new way in order to avoid misinterpretation and to ensure continued operational safety of these airplanes. To do so, we have based certain compliance thresholds on previous accomplishment of any revision of Boeing Alert Service Bulletin 737–28A1120 identified in paragraph (i)(1), (i)(2), (i)(3), or (i)(4) of This AD. These revisions of Boeing Alert Service Bulletin 737–28A1120 were previously mandated by AD 99–21–15, amendment 39–11360 (64 FR 54763, October 8, 1999) and the two ADs it superseded. AD 99–21–15 was superseded by AD 2007–11–07; therefore, we have not restated the requirements of AD 99–21–15 in this new AD.

Related Rulemaking

On May 1, 2007, we issued AD 2007–11–08, amendment 39–15065 (72 FR 28594, May 22, 2007), which applies to all Boeing Model 727 airplanes. AD 2007–11–08 requires repetitive inspections for damage of the electrical wire and sleeve that run to the fuel boost pump though a conduit in the fuel tank, and arcing damage of the conduit and signs of fuel leakage into the conduit; applicable investigative and corrective actions; and a repetitive engine fuel suction feed operational test. That AD resulted from reports of a fuel tank explosion on a Model 727–200F airplane on the ground; and of chafed wires and a damaged power cable sleeve of a fuel boost pump that were discovered during an inspection required by an existing AD on a Model 737–300 airplane. We issued that AD to detect and correct chafing of the fuel boost pump electrical wiring and leakage of fuel into the conduit, and to prevent electrical arcing between the wiring and the surrounding conduit, which could result in arc-through of the conduit, and consequent fire or explosion of the fuel tank.

Relevant Service Information

Since we issued AD 2007–11–07, Boeing has issued Service Bulletin 737–28A1263, Revision 2, dated August 10, 2007. We referred to Boeing Alert Service Bulletin 737–28A1263, Revision 1, dated March 19, 2007, as the appropriate source of service information for accomplishing certain actions in AD 2007–11–07. The procedures in Revision 2 of the service bulletin are essentially the same as those in Revision 1, with several editorial changes such as a revised e-mail address, and the addition of references to AD 2007–11–07. Revision 2 also incorporates alternative methods of compliance (AMOCs) previously approved for AD 2007–11–07.

FAA's Determination and Requirements of This AD

The unsafe condition described previously is likely to exist or develop on other airplanes of the same type design. For this reason, we are issuing this AD to supersede AD 2007–11–07. This new AD retains certain requirements of the existing AD. This AD also reduces the compliance threshold for certain airplanes.

Interim Action

We consider this AD interim action. If final action is later identified, we might consider further rulemaking then.

FAA's Determination of the Effective Date

An unsafe condition exists that requires the immediate adoption of this AD; therefore, providing notice and

opportunity for public comment before the AD is issued is impracticable, and good cause exists to make this AD effective in less than 30 days.

Comments Invited

This AD is a final rule that involves requirements affecting flight safety, and we did not provide you with notice and an opportunity to provide your comments before it becomes effective. However, we invite you to send any written data, views, or arguments about this AD. Send your comments to an address listed under the **ADDRESSES** section. Include ''Docket No. FAA–2007–0211; Directorate Identifier 2007–NM–221–AD'' at the beginning of your comments. We specifically invite comments on the overall regulatory, economic, environmental, and energy aspects of this AD. We will consider all comments received by the closing date and may amend this AD because of those comments.

We will post all comments we receive, without change, to *http://www.regulations.gov*, including any personal information you provide. We will also post a report summarizing each substantive verbal contact we receive about this AD.

Authority for This Rulemaking

Title 49 of the United States Code specifies the FAA's authority to issue rules on aviation safety. Subtitle I, Section 106, describes the authority of the FAA Administrator. Subtitle VII, Aviation Programs, describes in more detail the scope of the Agency's authority.

We are issuing this rulemaking under the authority described in Subtitle VII, Part A, Subpart III, Section 44701, ''General requirements.'' Under that section, Congress charges the FAA with promoting safe flight of civil aircraft in air commerce by prescribing regulations for practices, methods, and procedures the Administrator finds necessary for safety in air commerce. This regulation is within the scope of that authority because it addresses an unsafe condition that is likely to exist or develop on products identified in this rulemaking action.

Regulatory Findings

We have determined that this AD will not have federalism implications under Executive Order 13132. This AD will not have a substantial direct effect on the States, on the relationship between the national government and the States, or on the distribution of power and responsibilities among the various levels of government.

For the reasons discussed above, I certify that the regulation:

1. Is not a ''significant regulatory action'' under Executive Order 12866;

2. Is not a ''significant rule'' under the DOT Regulatory Policies and Procedures (44 FR 11034, February 26, 1979); and

3. Will not have a significant economic impact, positive or negative, on a substantial number of small entities under the criteria of the Regulatory Flexibility Act.

We prepared a regulatory evaluation of the estimated costs to comply with this AD and placed it in the AD docket. See the **ADDRESSES** section for a location to examine the regulatory evaluation.

List of Subjects in 14 CFR Part 39

Air transportation, Aircraft, Aviation safety, Incorporation by reference, Safety.

Adoption of the Amendment

■ Accordingly, under the authority delegated to me by the Administrator, the FAA amends part 39 of the Federal Aviation Regulations (14 CFR part 39) as follows:

PART 39—AIRWORTHINESS DIRECTIVES

■ 1. The authority citation for part 39 continues to read as follows:

Authority: 49 U.S.C. 106(g), 40113, 44701.

§ 39.13 [Amended]

■ 2. The Federal Aviation Administration (FAA) amends § 39.13 by removing amendment 39–15064 (72 FR 28597, May 22, 2007), corrected at 72 FR 46559, August 21, 2007, and adding the following new airworthiness directive (AD):

2007–24–02 Boeing: Docket No. FAA–2007–0211; Directorate Identifier 2007–NM–221–AD; Amendment 39–15268.

Effective Date

(a) This AD becomes effective December 6, 2007.

Affected ADs

(b) This AD supersedes AD 2007–11–07.

Applicability

(c) This AD applies to all Boeing Model 737–100, –200, –200C, –300, –400, and –500 series airplanes, certificated in any category.

Unsafe Condition

(d) This AD results from a report of a fuel tank explosion on a Model 727–200F airplane on the ground, and a report of chafed wires and a damaged power cable sleeve of a fuel boost pump discovered during an inspection on a Model 737–300 airplane. (The fuel boost pump installation on certain Model 737 airplanes is almost identical to the installation on Model 727 airplanes.) We are issuing this AD to detect and correct chafing of the fuel boost pump electrical wiring and leakage of fuel into the conduit, and to prevent electrical arcing between the wiring and the surrounding conduit, which could result in arc-through of the conduit, and consequent fire or explosion of the fuel tank.

Compliance

(e) You are responsible for having the actions required by this AD performed within the compliance times specified, unless the actions have already been done.

Certain Requirements of AD 2007–11–07

Inspection and Related Investigative and Corrective Actions

(f) At the applicable time specified by paragraph (f)(1) or (f)(2) of this AD: Do a detailed inspection for damage of the sleeve and electrical wire of the fuel boost pump; and, before further flight, install a new, smaller-diameter sleeve, and do related investigative and corrective actions, as applicable; in accordance with the Accomplishment Instructions of Boeing Alert Service Bulletin 737–28A1263, Revision 1, dated March 19, 2007; or Boeing Service Bulletin 737–28A1263, Revision 2, dated August 10, 2007. After the effective date of this AD, Revision 2 must be used. Thereafter, repeat the detailed inspection at intervals not to exceed 15,000 flight hours.

(1) For Model 737–100, –200, –300, –400, and –500 series airplanes: At the time specified in paragraph (i) or (j) of this AD, as applicable.

(2) For Model 737–200C series airplanes: Within 120 days after June 6, 2007 (the effective date of AD 2007–11–07), or within 5,000 flight hours after the last inspection or repair done in accordance with any version of Boeing Alert Service Bulletin 737–28–1120, whichever occurs later.

Inspection Report and Disposition of Damaged Parts

(g) At the applicable time specified in paragraph (g)(1) or (g)(2) of this AD: Submit a report of the findings (both positive and negative) of any inspection required by paragraph (f) of this AD and send any damaged parts to the manufacturer, as described in Boeing Alert Service Bulletin 737–28A1263, Revision 1, dated March 19, 2007. The report must include the inspection results, a description of any discrepancies found, the airplane serial number, and the number of landings and flight hours on the airplane. Under the provisions of the Paperwork Reduction Act (44 U.S.C. 3501 *et seq.*), the Office of Management and Budget (OMB) has approved the information collection requirements contained in this AD and has assigned OMB Control Number 2120–0056.

(1) For any inspection done on or after June 6, 2007: Submit the report within 30 days after the inspection.

(2) For any inspection done before June 6, 2007: Submit the report within 30 days after June 6, 2007.

Credit for Actions Done Using Previous Service Information

(h) Actions accomplished before June 6, 2007, in accordance with Boeing Service

Bulletin 737–28A1263, dated February 19, 2007, are considered acceptable for compliance with the corresponding actions specified in this AD.

New Requirements of This AD

Previously Required Inspection at New Compliance Times

(i) For Model 737–100, –200, –300, –400, and –500 series airplanes having line numbers 1 through 3072 inclusive: Within 120 days after the effective date of this AD, or within 5,000 flight hours after the last inspection or repair done in accordance with any service bulletin listed in paragraph (i)(1), (i)(2), (i)(3), or (i)(4) of this AD, whichever occurs later, do the actions specified in paragraph (f) of this AD.

(1) Boeing Alert Service Bulletin 737–28A1120, dated April 24, 1998, as revised by Notices of Status Change NSC 01, dated May 7, 1998, NSC 02, dated May 8, 1998, and NSC 03, dated May 9, 1998.

(2) Boeing Alert Service Bulletin 737–28A1120, Revision 1, dated May 28, 1998.

(3) Boeing Alert Service Bulletin 737–28A1120, Revision 2, dated November 26, 1998.

(4) Boeing Service Bulletin 737–28A1120, Revision 3, dated April 26, 2001.

(j) For Model 737–100, –200, –300, –400, and –500 series airplanes having line numbers 3073 and subsequent: At the applicable time specified in paragraph (j)(1) or (j)(2) of this AD, do the actions specified in paragraph (f) of this AD.

(1) For airplanes on which the inspection or repair specified in any service bulletin listed in paragraph (i)(1), (i)(2), (i)(3), or (i)(4) of this AD, has been done as of the effective date of this AD: Within 120 days after the effective date of this AD or 5,000 flight hours after the last inspection done in accordance with any service bulletin listed in paragraph (i)(1), (i)(2), (i)(3), or (i)(4) of this AD, whichever occurs later.

(2) For airplanes on which the inspection or repair specified in any service bulletin listed in paragraph (i)(1), (i)(2), (i)(3), or (i)(4) of this AD, has not been done as of the effective date of this AD: Before the accumulation of 5,000 total flight hours, or within 120 days after the effective date of this AD, whichever occurs later.

Inspection Report and Disposition of Damaged Parts

(k) For Model 737–100, –200, –300, –400, and –500 series airplanes: At the applicable time specified in paragraph (k)(1) or (k)(2) of this AD, submit a report of the findings (both positive and negative) of any inspection required by paragraph (i) or (j) of this AD and send any damaged parts to the manufacturer, as described in Boeing Service Bulletin 737–28A1263, Revision 2, dated August 10, 2007. The report must include the inspection results, a description of any discrepancies found, the airplane serial number, and the number of landings and flight hours on the airplane. Under the provisions of the Paperwork Reduction Act (44 U.S.C. 3501 *et seq.*), the Office of Management and Budget (OMB) has approved the information collection requirements contained in this AD and has assigned OMB Control Number 2120–0056.

(1) For any inspection done after the effective date of this AD: Submit the report within 30 days after the inspection.

(2) For any inspection done before the effective date of this AD: Submit the report within 30 days after the effective date of this AD.

Alternative Methods of Compliance (AMOCs)

(l)(1) The Manager, Seattle Aircraft Certification Office (ACO), FAA, has the authority to approve AMOCs for this AD, if requested in accordance with the procedures found in 14 CFR 39.19.

(2) To request a different method of compliance or a different compliance time for this AD, follow the procedures in 14 CFR 39.19. Before using any approved AMOC on any airplane to which the AMOC applies, notify your appropriate principal inspector (PI) in the FAA Flight Standards District Office (FSDO), or lacking a PI, your local FSDO.

(3) AMOCs approved previously in accordance with AD 99–21–15, amendment 39–11360, and AD 2007–11–07 are approved as AMOCs for the corresponding provisions of this AD.

Material Incorporated by Reference

(m) You must use applicable Boeing service bulletins specified in Table 1 of this AD to perform the actions that are required by this AD, unless the AD specifies otherwise.

TABLE 1.—ALL MATERIAL INCORPORATED BY REFERENCE

Service Bulletin	Revision level	Date
Boeing Alert Service Bulletin 737–28A1263	1	March 19, 2007.
Boeing Service Bulletin 737–28A1263	2	August 10, 2007.

(1) The Director of the Federal Register approved the incorporation by reference of Boeing Service Bulletin 737–28A1263, Revision 2, dated August 10, 2007, in accordance with 5 U.S.C. 552(a) and 1 CFR part 51.

(2) On June 6, 2007 (72 FR 28597, May 22, 2007), the Director of the Federal Register approved the incorporation by reference of Boeing Alert Service Bulletin 737–28A1263, Revision 1, dated March 19, 2007.

(3) Contact Boeing Commercial Airplanes, P.O. Box 3707, Seattle, Washington 98124–2207, for a copy of this service information. You may review copies at the FAA, Transport Airplane Directorate, 1601 Lind Avenue, SW., Renton, Washington; or at the National Archives and Records Administration (NARA). For information on the availability of this material at NARA, call 202–741–6030, or go to: *http://www.archives.gov/federal-register/cfr/ibr-locations.html.*

Issued in Renton, Washington, on November 8, 2007.

Ali Bahrami,

Manager, Transport Airplane Directorate, Aircraft Certification Service.

[FR Doc. E7–22724 Filed 11–20–07; 8:45 am]

BILLING CODE 4910–13–P

DEPARTMENT OF TRANSPORTATION

Federal Aviation Administration

14 CFR Part 77

[Docket No. FAA–2004–16982; Notice No. 07–16]

Colo Void Clause Coalition; Antenna Systems Co-Location; Voluntary Best Practices

AGENCY: Federal Aviation Administration (FAA); DOT.

ACTION: Notice of amended policy.

SUMMARY: On April 27, 2004, the FAA revised its policy regarding the co-location of antenna systems on existing structures previously studied by the FAA. Based on various additional comments from industry regarding the initial policy, the FAA finds that further modifications to this policy are necessary.

DATES: This policy is effective on November 21, 2007.

FOR FURTHER INFORMATION CONTACT: René J. Balanga, ATC Spectrum Engineering Services, Spectrum Assignment and Engineering Office, Federal Aviation Administration, 800 Independence Ave., SW., Washington, DC 20591, Telephone (202) 267–3819 or (202) 267–9710.

SUPPLEMENTARY INFORMATION:

Availability of Documents

You can get an electronic copy of rulemaking documents using the Internet by—

1. Searching the Federal eRulemaking Portal (*http://www.regulations.gov*);
2. Visiting the FAA's Regulations and Policies Web page at *http://www.faa.gov/regulations_policies/*; or
3. Accessing the Government Printing Office's Web page at *http://www.gpoaccess.gov/fr/index.html*.

You can also get a copy by sending a request to the Federal Aviation Administration, Office of Rulemaking, ARM–1, 800 Independence Avenue, S.W., Washington, DC 20591, or by calling (202) 267–9680. Make sure to identify the notice number or docket number of this rulemaking.

Background

Prior to April 2004, when the FAA issued a Determination of No Hazard for proposed construction or alteration of an antenna structure, the Determination included the following condition: ''This determination is based, in part, on the foregoing description which includes specific coordinates, heights, frequency(ies) and power. Any changes in coordinates, heights, frequency(ies) or use of greater power will void this determination. Any future construction or alteration, including an increase in heights, power, or the addition of other transmitters requires separate notice to the FAA.'' As a result of this condition, a proponent seeking only to add frequencies to a previously studied structure for which the FAA had issued a Determination of No Hazard must file notice with the FAA. They must file the notice on FAA Form 7460–1 in accordance with the previous discussed condition.

On April 27, 2004, the FAA revised its policy regarding the notification requirements for co-locating antenna systems on existing structures previously studied by the FAA. (*See* Notice No. 04–03; FAA–2004–16982; 69 FR 22732; April 27, 2004.) The FAA adopted this new policy, which was based on a Best Practices Agreement recommended by the CVCC.[1] Under this policy, a proponent is not required to file notice for an aeronautical study when adding certain frequencies to an existing structure that has a current Determination of No Hazard on file with the FAA. The policy applies only to antenna systems operating on the following frequencies and service types, as dictated by various parts of Title 47 of the Code of Federal Regulations (47 CFR),

- 806–821 MHz and 851–866 MHz (Industrial/Business/Specialized Mobile Radio Pool—Part 90).
- 821–824 MHz and 866–869 MHz (Public Safety Mobile Radio Pool—Part 90).
- 816–820 MHz and 861–865 MHz (Basic Exchange Telephone Radio—Parts 1 and 22).
- 824–849 MHz and 869–894 MHz (Cellular Radiotelephone—Parts 1 and 22).
- 849–851 MHz and 894–896 MHz (Air-Ground Radiotelephone—Parts 1 and 22).
- 896–901 MHz and 935–940 MHz (900 MHz SMR—Part 90).
- 901–902 MHz and 930–931 MHz (Narrowband PCS—Part 24).
- 929–930 MHz, 931–932 MHz, and 940–941 MHz (Paging—Parts 1, 22, and 90).
- 1850–1990 MHz (Broadband PCS—Part 24, Point-to-Point Microwave—Part 101).
- 2305–2320 MHz and 2345–2360 MHz (Wireless Communications Service (WCS)—Part 27).

On February 1, 2006, the CVCC requested that the agency consider amending the April 27, 2004 policy by adding additional frequency bands to the policy. The following frequency bands and wireless services, as prescribed in 47 CFR, were submitted by the CVCC:

- 698–806 MHz (Advanced Wireless Service—Part 27).
- 1710–1755 MHz, 2020–2025 MHz, and 2110–2180 MHz (Advanced Wireless Service—Part 27).
- 1670–1675 MHz (Wireless Communications Service—Part 27).
- 1990–2000 MHz (Broadband PCS—Part 24).
- 2000–2020 MHz and 2180–2200 MHz (Mobile Satellite Service—Part 25).
- 2320–2345 MHz (Satellite Digital Audio Radio Service—Part 27).
- 2496–2690 MHz (Broadband Radio Service—Part 27).
- 6.0–7.0 GHz, 10.0–11.7 GHz, 17.7–19.7 GHz, and 21.2–23.6 GHz (Fixed Microwave Service—Part 101).

In reviewing the above list, the FAA notes that two frequency bands (1710–1755 MHz [Advanced Wireless Service] and 21.2–23.6 GHz [Fixed Microwave Service]) [2] overlap a portion or in its entirety, frequency bands the FAA currently uses to support aviation. These services may include, but are not limited to, critical situational data regarding aircraft positioning to air traffic controllers or essential voice or data communication links for air traffic control operations. If harmful electro magnetic interference (EMI) occurs to these FAA services, the services may be interrupted or degraded to a level at which pilots or air traffic controllers miss vital flight transmissions, thus potentially reducing aviation safety in the National Airspace System.

On June 13, 2006, the FAA published a Notice of Proposed Rulemaking that, in part, sought to require notice for wireless services and fixed microwave services operating in the 21.2–23.6 GHz (71 FR 34028; June 13, 2006). These frequencies are now included under this amended policy. Even though the agency has not adopted a final rule in this matter and the rule is pending, the FAA announces its intention to exclude the 21.2–23.6 GHz frequencies from the final rule. When the final rule is issued, those frequencies will be withdrawn.

FAA's review of prior case studies of co-located antenna systems and extensive engineering evaluations showed minimal EMI effects on FAA facilities from wireless services propagating on a majority of the identified frequency bands above, if operating under typical specifications. In addition, existing frequency coordination policies set forth by the National Telecommunications and Information Administration and the Federal Communications Commission, facilitate the evaluation of potential EMI in frequency bands that are joint-use by industry and the FAA. Therefore, the FAA concludes that the current policy can be amended to include the proposed frequencies.

Lastly, the April 27, 2004, policy stated several conditions that would facilitate the assurance of aviation safety from the potential of EMI. One condition is for proponents to provide the FAA with an electronic copy of its antenna system location databases. Since the inception of the policy, the FAA has received several requests for clarification by CVCC members with respect to that condition 1.

Condition 1 provides that,

> The proponent must provide the FAA Regional Spectrum Offices with an electronic copy of its antenna system location databases quarterly or as specified in a Letter of

[1] The CVCC is a coalition of wireless cellular phone and Personal Communication Services (PCS) service providers, tower companies, and trade associations, including the Personal Communications Industry Association (PCIA) and the Cellular Telecommunications and Internet Association (CTIA). CVCC members currently own or manage most of the radio towers throughout the United States. Major wireless service providers primarily make up the coalition, but all other wireless service providers in the cellular phone and PCS industries are represented by the CVCC through membership with PCIA and CTIA.

[2] In 2006, the FCC conducted an auction of the 2GHz (1.7 GHz and 2.1GHz) frequency band (Auction 66).

Agreement with the FAA Regional Spectrum Offices.

CVCC members seek clarification with respect to: (1) The type of information necessary for the electronic database; (2) the sites that need to be included during each quarterly database submittal to the FAA; and (3) how to submit the database file(s). We have reconsidered the condition and find that any unintentional EMI resulting under this policy can be mitigated by condition 2 of the policy.[3] Therefore, condition 1 can be withdrawn and it will no longer be necessary to provide that information.

The amended policy is restated in its entirety below.

Policy

The FAA recognizes the telecommunications industry's need and commitment to provide wireless services to the public. Also, the FAA recognizes that it is essential for these companies to speed up the time frame for build-out and deployment of their networks. However, the FAA's first commitment is to aviation safety. Thus the FAA finds that it can amend its policy to accommodate certain issues raised by the CVCC's Best Practices Agreement. Notwithstanding this new policy, the requirements under 14 CFR part 77 about notice to the FAA of proposed construction or alteration of man-made structures under existing FAA policy and regulations are not altered or modified. If the addition of frequencies, under this policy, to a previously studied structure increases the height of that structure, notice must be filed with the FAA under 14 CFR 77.13. Physical structures located on or near public use landing facilities raise concerns about possible obstruction to aircraft, and the FAA will handle these issues pursuant to current regulations and procedures.

Under this new policy, a proponent is not required to file notice with the FAA for an aeronautical study to add frequencies to an existing structure that has a current No Hazard Determination on file with the FAA. If an additional antenna system must be used to add frequencies, the antenna system must not be located on Federal or public use landing facilities property. Also, the antenna system must not be co-located or mounted on an FAA antenna structure without prior coordination with the FAA's ATC Spectrum Engineering Services.

This policy only applies to antenna systems operating on the following frequencies and service types, as dictated by various parts of 47 CFR:

- 698–806 MHz (Advanced Wireless Service—Part 27).
- 806–821 MHz and 851–866 MHz (Industrial/Business/Specialized Mobile Radio Pool—Part 90).
- 821–824 MHz and 866–869 MHz (Public Safety Mobile Radio Pool—Part 90).
- 816–820 MHz and 861–865 MHz (Basic Exchange Telephone Radio—Parts 1 and 22).
- 824–849 MHz and 869–894 MHz (Cellular Radiotelephone—Parts 1 and 22).
- 849–851 MHz and 894–896 MHz (Air-Ground Radiotelephone—Parts 1 and 22).
- 896–901 MHz and 935–940 MHz (900 MHz SMR—Part 90).
- 901–902 MHz and 930–931 MHz (Narrowband PCS—Part 24).
- 929–930 MHz, 931–932 MHz, and 940–941 MHz (Paging—Parts 1, 22, and 90).
- 1710–1755 MHz, 2020–2025 MHz, and 2110–2180 MHz (Advanced Wireless Service—Part 27).
- 1670–1675 MHz (Wireless Communications Service—Part 27).
- 1850–1990 MHz (Broadband PCS—Part 24, Point-to-Point Microwave—Part 101).
- 1990–2000 MHz (Broadband PCS—Part 24).
- 2000–2020 MHz and 2180–2200 MHz (Mobile Satellite Service—Part 25).
- 2305–2320 MHz and (Wireless Communications Service (WCS)—Part 27).
- 2320–2345 MHz (Satellite Digital Audio Radio Service—Part 27).
- 2496–2690 MHz (Broadband Radio Service—Part 27).
- 6.0–7.0 GHz, 10.0–11.7 GHz, 17.7–19.7 GHz, and 21.2–23.6 GHz (Fixed Microwave Service—Part 101).

In addition, the following conditions also apply: (1) If an antenna system, operating in the designated frequency bands, causes EMI to one or more FAA facilities, the FAA will contact the proponent. The proponents must mitigate the EMI in a timely manner, as recommended by the FAA in each particular case. Depending on the severity of the interference, the proponent must eliminate harmful EMI either by adjusting operating parameters (for example, employing extra filtering or reducing effective radiated power), or by ceasing transmissions, as may be required by the FCC and the FAA. Failure to provide successful EMI mitigation techniques will result in referral to the FCC's Enforcement Bureau for possible enforcement action. (2) This policy only applies to current technologies and modulation techniques (analog, TDMA, GSM, etc.) existing in the wireless radiotelephone environment on the date of issuance of this policy. Any future technologies placed into commercial service by wireless service providers, although operating on the frequencies mentioned above, must either coordinate the new technology with the FAA's ATC Spectrum Engineering Services or must provide notification to the FAA under 14 CFR part 77 procedures.

The FAA will revise the conditional language in future cases involving Determination of No Hazard to reflect this policy. Furthermore, this policy applies retroactively to any structure for which the FAA has issued a Determination of No Hazard.

Issued in Washington, DC on November 15, 2007.

Steve Zaidman,

Vice President, Technical Operations Services.

[FR Doc. E7–22720 Filed 11–20–07; 8:45 am]

BILLING CODE 4910–13–P

[3] Condition 2—If an antenna system, operating in the designated frequency bands, causes EMI to one or more FAA facilities, the FAA will contact the proponent. The proponent must mitigate the EMI in a timely manner, as recommended by the FAA in each particular case. Depending upon the severity of the interference, the proponent must eliminate harmful EMI either by adjusting operating parameters, (for example, employing extra filtering or reducing effective radiated power), or by ceasing transmissions, as may be required by the FCC and the FAA. Failure to provide successful EMI mitigation techniques will result in referral to the FCC's Enforcement Bureau for possible enforcement action. (69 FR 22732; April 27, 2004)

NATIONAL AERONAUTICS AND SPACE ADMINISTRATION

14 CFR Part 1245

[Notice: (07–083)]

RIN 2700–AD35

Patents and Other Intellectual Property Rights

AGENCY: National Aeronautics and Space Administration.

ACTION: Final rule.

SUMMARY: NASA is amending its regulations by removing NASA's Foreign Patent Licensing Regulations. NASA no longer follows these regulations, but issues licenses based on Government-wide licensing regulations promulgated by the Department of Commerce that take precedence over individual agency licensing regulations.

EFFECTIVE DATE: November 21, 2007.

FOR FURTHER INFORMATION CONTACT: Alan Kennedy, Commercial and Intellectual Property Law Practice

Group, Office of the General Counsel, NASA Headquarters, telephone (202) 358–2065, fax (202) 358–4341.

SUPPLEMENTARY INFORMATION: The Department of Commerce issued Government-wide regulations which prescribe the terms, conditions, and procedures upon which a federally-owned invention may be licensed both internationally and domestically. The Department of Commerce regulations take precedence over individual agency licensing regulations. NASA grants licenses in accordance with the Department of Commerce regulations. Thus, NASA is cancelling its foreign licensing regulations.

List of Subjects in 14 CFR Part 1245

Authority delegations (Government agencies), Inventions and patents.

■ Under the authority, 42 U.S.C. 2473, 14 CFR part 1245 is amended as follows:

PART 1245—PATENTS AND OTHER INTELLECTUAL PROPERTY RIGHTS

■ 1. The authority citation for part 1245 continues to read as follows:

Authority: 42 U.S.C. 2457, 35 U.S.C. 200 *et seq.*

Subpart 4—[Removed and Reserved]

■ 2. Remove and reserve Subpart 4, consisting of §§ 1245.400 through 1245.405.

Michael D. Griffin,

Administrator.

[FR Doc. E7–22704 Filed 11–20–07; 8:45 am]

BILLING CODE 7510–13–P

DEPARTMENT OF THE TREASURY

Alcohol and Tobacco Tax and Trade Bureau

27 CFR Part 24

[T.D. TTB–64; Re: T.D. ATF–390 and ATF Notice No. 852]

RIN 1513–AA05

Small Domestic Producer Wine Tax Credit—Implementation of Public Law 104–188, Section 1702, Amendments Related to the Revenue Reconciliation Act of 1990 (96R–028T)

AGENCY: Alcohol and Tobacco Tax and Trade Bureau, Treasury.

ACTION: Final rule (Treasury decision).

SUMMARY: The Alcohol and Tobacco Tax and Trade Bureau is adopting as a final rule, with some clarifying or editorial changes, the temporary regulations concerning transfer of the small domestic producer wine tax credit and computation of the wine bond that were adopted in response to the Small Business Job Protection Act of 1996.

EFFECTIVE DATE: November 21, 2007.

FOR FURTHER INFORMATION CONTACT: Marjorie D. Ruhf, Regulations and Rulings Division, 1310 G Street, NW., Washington, DC 20220; (202) 927–8202; or *Marjorie.Ruhf@ttb.gov*.

SUPPLEMENTARY INFORMATION:

Background

The Alcohol and Tobacco Tax and Trade Bureau (TTB) is responsible for administering the provisions of Chapter 51 of the Internal Revenue Code of 1986 (IRC), including promulgating regulations pursuant to Chapter 51 pertaining to Federal excise taxes on alcohol beverage products. Section 5041 of the IRC (26 U.S.C. 5041) imposes a tax on wines in bond in, produced in, or imported into, the United States. Section 5041(c) allows a credit against the tax for small domestic wine producers. The regulations implementing this credit were promulgated in part 24 of the TTB regulations (27 CFR part 24). Prior to January 24, 2003, our predecessor Agency, the Bureau of Alcohol, Tobacco and Firearms (ATF), administered the regulations in part 24.

History of the Small Domestic Producer Wine Tax Credit

The Revenue Reconciliation Act of 1990

The Revenue Reconciliation Act of 1990 (the RRA), Title XI of Public Law 101–508, 104 Stat. 1388–400, was enacted on November 5, 1990. Section 11201 of the RRA increased by 90 cents per wine gallon the rate of tax on still wines and artificially carbonated wines removed from bonded premises or Customs custody on or after January 1, 1991. The law did not increase the tax rate on champagne and other sparkling wine.

Section 11201 also provided a credit of up to 90 cents per wine gallon for small domestic wine producers on the first 100,000 gallons of wine (other than champagne and other sparkling wine) removed for consumption or sale during a calendar year. This credit could be taken by a bonded wine premises proprietor who produced not more than 250,000 gallons of wine in a given calendar year. The provisions of section 11201 separated the activities of production and removal in such a way that eligibility for the credit was based on removal of wine by an eligible small producer and was not conditioned on the producer actually producing the wine removed. Thus, a proprietor who produced less than 250,000 gallons of wine a year could take the small domestic producer wine tax credit on wine purchased and received in bond as long as the wine was within the first 100,000 gallons of wine removed from the small producer's bonded premises during the calendar year.

Under the RRA, small wine producers were eligible to take the small producer wine tax credit only on wine removed for consumption or sale by that producer. If the producer transferred wine in bond to another bonded wine premises (for example, a bonded wine cellar used as a warehouse) for storage pending subsequent removal by the warehouse, then the producer could not claim a credit on that wine, since the producer had not removed the wine for consumption or sale. If the warehouse did not produce wine at all, or produced more than 250,000 gallons of wine, then the warehouse was not eligible for the small producer wine tax credit. Even if the warehouse produced wine and was eligible for credit in its own right, its eligibility was limited to the first 100,000 gallons removed during the year. In order to receive the credit, some small wineries began to taxpay their wines at the time of removal and store the wines in a taxpaid status rather than transfer them in bond.

The Small Business Job Protection Act of 1996

Section 1702 of the Small Business Job Protection Act of 1996 (the SBJPA), Public Law 104–188, 110 Stat. 1755, enacted on August 20, 1996, included an amendment to the small domestic wine producer tax credit provision in section 5041(c). The SBJPA amendment allowed the tax credit authorized under section 5041(c) to be taken by ''transferees in bond'' such as bonded wine cellars used as warehouses on behalf of their small producer customers. As a result of this amendment, section 5041(c) now provides that if wine produced by any person would be eligible for the small producer credit if removed by the producer, and if wine produced by that person is transferred in bond to another person (the transferee) who removes the wine during the calendar year and is liable for the tax on the wine, then the transferee (and not the producer) will be allowed to take the small producer credit under certain circumstances. The producer of the wine must hold title to the wine at the time of its removal and must provide to the transferee such information as is necessary to properly determine the transferee's credit under section 5041(c)(6). The statutory language thus limits the application of

the credit to transferees in bond receiving wine from the actual producer of the wine in question and not from a subsequent owner who may also be a small producer.

In addition to the transfer of credit provisions, the SBJPA included an amendment to the bond computation rules in 26 U.S.C. 5354, which allowed the small domestic producer wine tax credit to be taken into account when calculating the penal sum of the bond.

The SBJPA provided that the amendments made by section 1702 took effect as if they had been included in the provisions of the RRA to which the amendment related. Accordingly, the amendments made to the small domestic producer wine tax credit provisions under the SBJPA were retroactive to January 1, 1991.

The Taxpayer Relief Act of 1997

The Taxpayer Relief Act of 1997 (the TRA), Public Law 105–34, 111 Stat. 788, was enacted on August 5, 1997. Section 908 of the TRA added to section 5041 a new wine tax class, ''hard cider,'' imposed a $0.226 rate of tax on hard cider, and provided for a reduced amount of the small domestic producer wine tax credit ($0.056) applicable to the hard cider tax rate. These provisions applied to hard cider removed from bond on or after October 1, 1997.

Rulemaking Actions

In response to these three statutory changes, ATF took the following regulatory actions.

On December 11, 1990, ATF published T.D. ATF–307 (55 FR 52732), a final rule effective January 1, 1991, to implement a number of changes related to the RRA. Among other changes, T.D. ATF–307 added two new sections to 27 CFR part 24. New § 24.278 implemented the wine tax credit for small domestic producers. New § 24.279 set forth the procedure for making adjustments to tax returns as a result of improper application of the tax credit. ATF did not request comments prior to issuing this final rule.

On June 2, 1997, ATF published at 62 FR 29663 a temporary rule, T.D. ATF–390, to amend §§ 24.148, 24.278, and 24.279 (27 CFR 24.148, 24.278, and 24.279) to implement the SBJPA statutory changes. In the temporary rule, ATF also incorporated in § 24.278(a) the provisions of ATF Ruling 92–1 (A.T.F. Q.B. 1992–3, 55), which held that the small producer wine tax credit is available only to eligible proprietors engaged in the business of producing wine. On the same day, ATF published a Notice of Proposed Rulemaking, Notice No. 852 (62 FR 29681), inviting comments on this temporary rule. The one comment that ATF received on this temporary rule is discussed below.

On August 21, 1998, ATF published at 63 FR 44779 another temporary rule, T.D. ATF–398, to implement the hard cider tax rate and several other provisions of the TRA. This temporary rule amended § 24.278 to reflect a new rate for the small domestic producer wine tax credit on hard cider. On the same day, ATF published a Notice of Proposed Rulemaking, Notice No. 859 (63 FR 44819), inviting comments on that temporary rule. For various reasons unrelated to the amendment of the credit provision in § 24.278, ATF extended the comment period, postponed the labeling compliance date, and solicited comments on alternative labeling rules. The T.D. ATF–398 amendment to § 24.278 was adopted as a final rule without any change by T.D. ATF–470 (66 FR 68938) on November 26, 2001.

Discussion of Comment Received in Response to T.D. ATF–390

As previously stated, ATF received only one comment in response to the temporary rule implementing the SBJPA statutory changes. Kenwood Vineyards commented that the provisions of the temporary rule placed the burden of ''recordkeeping, reporting, compliance and cash flow'' on the transferee in bond and suggested that the small producer should pay the tax, subject to any appropriate credit, on its own return when the transferee removes the wine. TTB cannot adopt this suggestion because under 26 U.S.C. 5043, when wine is transferred in bond as authorized by 26 U.S.C. 5362(b), the liability for payment of the tax becomes the liability of the transferee at the time of removal of the wine from the transferor's premises. The law provides that liability for paying the tax transfers to the transferee when the wine is transferred in bond and that the transferor is relieved of liability. TTB cannot by regulation alter who is liable to pay the tax.

Adoption of Final Rule

Based on the legislative and rulemaking history outlined above, TTB has determined that the temporary regulations published in T.D. ATF–390 should be adopted as a final rule with minor corrections and clarifications as discussed below.

In § 24.148, we are making two corrections in the table:

1. In the first column (Bond), we are updating the form number of the Wine Bond to read TTB F 5120.36.

2. In the second column (Basis), we are revising paragraph (1). Prior to the amendment by T.D. ATF–390, the first sentence of paragraph (1), which sets out the basis for calculating the bond coverage, read, in pertinent part, ''tax on all wine or spirits possessed, in transit or unaccounted for at any one time * * *.'' This wording was based on that of the underlying statute, 26 U.S.C. 5354, which reads, in pertinent part, ''tax on any wine or distilled spirits possessed or in transit at any one time * * *.'' In T.D. ATF–390, we inadvertently omitted the word ''possessed.'' We are correcting that omission by restoring the word ''possessed'' to mirror the statute. We are also subdividing paragraph (1) to separate the two maximum penal sum amounts.

In § 24.278, we are making the following changes and corrections:

1. In paragraph (b)(2)(ii), we are substituting the phrase ''tax imposed by 26 U.S.C. 5041'' for the words ''tax imposed by this section.'' The latter wording reflects the precise statutory language, which is inapposite in the context of the regulatory text.

2. We are retaining, in paragraphs (d)(1) and (d)(2), the references to hard cider adopted in T.D. ATF–470, as previously discussed.

3. At the end of paragraph (e)(2), we are adding a sentence to clarify that sparkling wine, which is not eligible for credit, does not count as a removal against the 100,000 gallon limitation. This reflects the longstanding position of TTB and ATF.

4. In § 24.278(g), we are adding a reference to section 5041(c)(5) of the IRC to clarify the statutory basis for the language setting forth the requirements with regard to deductions under Subtitle A of the IRC.

In § 24.279(a), we are adding a reference to the statutory conditions for imposition of penalties under section 6662 of the IRC. The added language clarifies circumstances in which TTB would require the inclusion of these penalties as part of the adjustment for excess credit taken during a calendar year.

Finally, we are making some plain language and other editorial changes to §§ 24.148, 24.278, and 24.279 to enhance their clarity and readability without substantively affecting the texts, and we have added the Office of Management and Budget (OMB) control number to § 24.148 and updated the OMB control numbers for §§ 24.278 and 24.279 as noted in the Paperwork Reduction Act discussion in this preamble.

Inapplicability of Delayed Effective Date Requirement

Pursuant to the provisions of 5 U.S.C. 553(d)(1) and (d)(3), we are issuing these regulations without a delayed effective date. These final regulations recognize an exemption within the meaning of section 553(d)(1) because they implement a 1996 statutory amendment expanding the scope of the small domestic producer wine tax credit in order to cover removals by transferees in bond under specified circumstances. Furthermore, TTB has determined that good cause exists to provide wineries with immediate guidance on their utilization of this credit in accordance with section 553(d)(3).

Regulatory Flexibility Act

Pursuant to the requirements of the Regulatory Flexibility Act (5 U.S.C. chapter 6), we certify that these regulations will not have a significant economic impact on a substantial number of small entities. Any revenue effects of this rulemaking on small businesses flow directly from the underlying statute. Likewise, any secondary or incidental effects, and any reporting, recordkeeping, or other compliance burdens flow directly from the statute. Accordingly, a regulatory flexibility analysis is not required. Pursuant to 26 U.S.C. 7805(f), the temporary regulation was submitted to the Chief Counsel for Advocacy of the Small Business Administration for comment on its impact on small business, and we received no comments.

Executive Order 12866

It has been determined that this rule is not a significant regulatory action as defined by Executive Order 12866. Therefore, a regulatory assessment is not required.

Paperwork Reduction Act

Under the Paperwork Reduction Act of 1995, no persons are required to respond to a collection of information unless it displays a valid Office of Management and Budget (OMB) control number. The collections of information in the regulations contained in this final rule have been previously reviewed and approved by OMB in accordance with the Paperwork Reduction Act of 1995 (44 U.S.C. 3504(h)) under control numbers 1512–0058, 1512–0540, and 1512–0492, originally issued to ATF. When TTB took over the administration of the wine tax, these control numbers were changed by OMB to 1513–0009, 1513–0104, and 1513–0088, respectively. Although sections of the regulations covered by these approvals are amended for clarity, this final rule imposes no new or revised collection of information, and does not change the reporting or recordkeeping burden.

Drafting Information

Marjorie Ruhf of the Regulations and Rulings Division, Alcohol and Tobacco Tax and Trade Bureau, drafted this document.

List of Subjects in 27 CFR Part 24

Administrative practice and procedure, Authority delegations, Claims, Electronic fund transfers, Excise taxes, Exports, Food additives, Fruit juices, Labeling, Liquors, Packaging and containers, Reporting and recordkeeping requirements, Research, Scientific equipment, Spices and flavoring, Surety bonds, Taxpaid wine bottling house, Transportation, Vinegar, Warehouses, Wine.

Amendments to the Regulations

■ Accordingly, for the reasons set forth in the preamble, the temporary rule amending 27 CFR part 24, which was published on June 2, 1997, at 62 FR 29663, is adopted as a final rule with the changes as discussed above and set forth below.

PART 24—WINE

■ 1. The authority citation for part 24 continues to read as follows:

Authority: 5 U.S.C. 552(a); 26 U.S.C. 5001, 5008, 5041, 5042, 5044, 5061, 5062, 5081, 5111–5113, 5121, 5122, 5142, 5143, 5148, 5173, 5206, 5214, 5215, 5351, 5353, 5354, 5356, 5357, 5361, 5362, 5364–5373, 5381–5388, 5391, 5392, 5511, 5551, 5552, 5661, 5662, 5684, 6065, 6091, 6109, 6301, 6302, 6311, 6651, 6676, 7011, 7302, 7342, 7502, 7503, 7606, 7805, 7851; 31 U.S.C. 9301, 9303, 9304, 9306.

■ 2. Section 24.148 is revised to read as follows:

§ 24.148 Penal sums of bonds.

The penal sums of bonds prescribed in this part are as follows:

Bond	Basis	Penal sum	
		Minimum	Maximum
(a) Wine Bond, TTB F 5120.36	(1) Wine operations coverage. (i) Not less than the tax on all wine or spirits possessed, in transit, or unaccounted for at any one time, taking into account the appropriate small producer wine tax credit.	$1,000	$50,000
	(ii) Where the liability exceeds $250,000	.....	100,000
	(2) Tax deferral coverage. Where the unpaid tax amounts to more than $500, not less than the amount of tax which, at any one time, has been determined but not paid. Exception: $1,000 of the wine operations coverage may be allocated to cover the amount of tax which, at any one time, has been determined but not paid, if the total operations coverage is $2,000 or more.	500	250,000
(b) Wine Vinegar Plant Bond, TTB F 5510.2.	Not less than the tax on all wine on hand, in transit, or unaccounted for at any one time.	1,000	100,000

* The proprietor of bonded wine premises who operates an adjacent or contiguous wine vinegar plant with a wine bond that does not cover the operation may file a consent of surety to extend the terms of the wine bond in lieu of filing a wine vinegar plant bond.

(26 U.S.C. 5354, 5362)

(Approved by the Office of Management and Budget under control number 1513–0009)

■ 3. Section 24.278 is revised to read as follows:

§ 24.278 Tax credit for certain small domestic producers.

(a) *General.* A person who produces not more than 250,000 gallons of wine during the calendar year may take a credit against any tax imposed by Title 26 of the United States Code (other than Chapters 2, 21, and 22), in an amount computed in accordance with paragraph (d) of this section, on the first 100,000 gallons of wine (other than champagne and other sparkling wine) removed during that year for consumption or sale. This credit applies only to wine that has been produced at a qualified bonded wine premises in the United

States. The small domestic wine producer tax credit is available only to eligible proprietors engaged in the business of producing wine. A proprietor who has a basic permit to produce wine but does not produce wine during a calendar year may not take the small producer wine tax credit on wine removed during that calendar year. A proprietor who has obtained a new wine producer basic permit may not take the small producer wine tax credit on wine removed until the proprietor has produced wine. ''Production'' of wine includes those activities described in paragraph (e)(1) of this section.

(b) *Special rules relating to eligibility for wine credit*—(1) *Controlled groups.* For purposes of this section and § 24.279, the term ''person'' includes a controlled group of corporations, as defined in 26 U.S.C. 1563(a), except that the phrase ''more than 50 percent'' must be substituted for the phrase ''at least 80 percent'' wherever it appears. Also, the rules for a ''controlled group of corporations'' apply in a similar fashion to groups that include partnerships and/or sole proprietorships. Production and removals of all members of a controlled group are treated as if they were the production and removals of a single taxpayer for the purpose of determining what credit a person may use.

(2) *Credit for transferees in bond.* A person other than the eligible small producer (hereafter in this paragraph referred to as the ''transferee'') may take the credit under paragraph (a) of this section that would be allowed to that producer if the wine removed by the transferee had been removed by the producer on that date, under the following conditions:

(i) Wine produced by any person would be eligible for any credit under this section if removed by that person during the calendar year;

(ii) Wine produced by that person is removed during that calendar year by the transferee to whom that wine was transferred in bond and who is liable for the tax imposed by 26 U.S.C. 5041 with respect to that wine;

(iii) That producer holds title to that wine at the time of its removal and provides to the transferee such information as is necessary to properly determine the transferee's credit under this paragraph; and

(iv) At the time of taxable removal, the producer provides to the transferee, in writing (each retaining a copy with the record of taxpaid removal from bond pursuant to § 24.310), the following information:

(A) The names of the producer and transferee;

(B) The quantity and tax class of the wines to be shipped;

(C) The date of removal from bond for consumption or sale;

(D) A confirmation that the producer is eligible for credit, with the credit rate to which the wines are entitled; and

(E) A confirmation that the subject shipment is within the first 100,000 gallons of eligible wine removed by (or on behalf of) the producer for the calendar year.

(c) *Time for determining and allowing credit.* The credit referred to in paragraph (a) of this section will be determined at the same time as the tax is determined under 26 U.S.C. 5041(a), and will be allowable at the time any tax described in paragraph (a) of this section is payable. The credit allowable by this section is treated as if it constitutes a reduction in the rate of the tax.

(d) *Computation of credit.* The credit which may be taken on the first 100,000 gallons of wine (other than champagne and other sparkling wine) removed for consumption or sale by an eligible person during a calendar year is computed as follows:

(1) For persons who produce 150,000 gallons or less of wine during the calendar year, the credit is $0.90 per gallon for wine ($0.056 for hard cider);

(2) For persons who produce more than 150,000 gallons but not more than 250,000 gallons during the calendar year, the credit is reduced by 1 percent for every 1,000 gallons produced in excess of 150,000 gallons. For example, the credit that would be taken by a person who produced 160,500 gallons of wine and hard cider during a calendar year would be reduced by 10 percent, for a net credit against the tax of $0.81 per gallon for wine or $0.0504 for hard cider, as long as the wine or hard cider was among the first 100,000 gallons removed for consumption or sale during the calendar year.

(e) *Definitions*—(1) *Production.* For purposes of determining if a person's production of wine is within the 250,000 gallon limit, production includes, in addition to wine produced by fermentation, any increase in the volume of wine due to the winery operations of amelioration, wine spirits addition, sweetening, or production of formula wine. Production of champagne and other sparkling wines is included for purposes of determining whether total production of a winery exceeds 250,000 gallons. Production includes all wine produced at qualified bonded wine premises within the United States and wine produced outside the United States by the same person.

(2) *Removals.* For purposes of determining if a person's removals are within the 100,000 gallon limit, removals include wine that the person removed from all qualified bonded wine premises within the United States. Wine removed by a transferee in bond under paragraph (b)(2) of this section must be counted against the 100,000 gallon limit of the small producer who owns that wine, and not against the limit of the transferee in bond if the transferee is also a small producer. Champagne and other sparkling wines, which are not eligible for credit, do not count as removals against the 100,000 gallon limit.

(f) *Preparation of tax return.* A person who is eligible for the credit must show the amount of wine tax before credit on the Excise Tax Return, TTB F 5000.24, and must enter the quantity of wine subject to the credit and the applicable credit rate as the explanation for an adjusting entry in Schedule B of the return for each tax period. Where a person does not use the credit authorized by this section to directly reduce the rate of Federal excise tax on wine, that person must report on TTB F 5000.24 where the credit will be, or has been, applied. Where a transferee in bond takes credit on behalf of one or more small producers, the transferee must show in Schedule B of the return the name of each producer, each producer's credit rate, and the total credit taken on behalf of each producer during the tax return period.

(g) *Denial of deduction.* Pursuant to 26 U.S.C. 5041(c)(5), any deduction under 26 U.S.C. subtitle A with respect to any tax against which the credit is allowed under paragraph (a) of this section must only be for the amount of the tax as reduced by the credit.

(h) *Exception to credit.* The appropriate TTB officer will deny any tax credit taken under paragraph (a) of this section where it is determined that the allowance of the credit would benefit a person who would otherwise fail to qualify for the use of the credit. (26 U.S.C. 5041(c).)

(Approved by the Office of Management and Budget under control number 1513–0104)

■ 4. Section 24.279 is revised to read as follows:

§ 24.279 Tax adjustments related to wine credit.

(a) *Increasing adjustments.* Persons who produce more wine than the amount used in computation of the credit, or who lose eligibility by not producing during a calendar year, must make increasing tax adjustments. Where an increasing adjustment to a person's

tax return is necessary as a result of an incorrect credit rate claimed pursuant to § 24.278, that person must make the adjustment on the Excise Tax Return, TTB F 5000.24, no later than the return period in which production (or the production of the controlled group of which the person is a member) exceeds the amount used in computation of the credit. If the adjustment is due to failure to produce, the person must make the adjustment no later than the last return period of the calendar year. The adjustment is the difference between the credit taken for prior return periods in that year and the appropriate credit for those return periods. The person must make tax adjustments for all bonded wine premises where excess credits were taken against tax that year, and must include interest payable. In the case of a person who continued to deduct credit after reaching the 100,000 gallon maximum during the calendar year, that person must make an adjustment in the full amount of excess credit taken and must include interest payable under 26 U.S.C. 6601 from the date on which the excess credit was taken. In addition, the person must include the penalty payable under 26 U.S.C. 6662 if the appropriate TTB officer determines that the underpayment was due to negligence or disregard of rules or regulations and advises the person to include the penalty as part of the adjustment. The appropriate TTB officer will provide information, when requested, regarding interest rates applicable to specific time periods and regarding any applicable penalties. In the case of a controlled group of bonded wine premises that took excess credits, all member proprietors who took incorrect credits must make tax adjustments as determined in this section. In the case of a small producer who instructed a transferee in bond to take credit as authorized by § 24.278(b)(2), and subsequently determines that the credit was less or not applicable, that producer must immediately inform the transferee in bond, in writing, of the correct credit information. The transferee must make any increasing adjustment on its next tax return based on revised credit information given by the producer or a TTB officer.

(b) *Decreasing adjustments.* Where a person fails to deduct the credit or deducts less than the appropriate credit provided for by § 24.278 during the calendar year, the person may file a claim for refund of excess tax paid. The claim must be filed in accordance with § 24.69. In the case of wine removed on behalf of a small producer by a transferee in bond, if the transferee in bond was instructed to deduct credit and failed to deduct credit or deducted less than the appropriate credit and was later reimbursed for the tax by that producer, the transferee may file the claim. The provisions of 26 U.S.C. 6423 and 27 CFR part 70, subpart F, will apply, and the producer and transferee in bond must show that the conditions of § 24.278(b)(2) were met. (26 U.S.C. 5041(c))

(Approved by the Office of Management and Budget under control number 1513–0088)

Signed: August 24, 2007.

John J. Manfreda,

Administrator.

Approved: November 5, 2007.

Timothy E. Skud,

Deputy Assistant Secretary (Tax, Trade, and Tariff Policy).

[FR Doc. E7–22698 Filed 11–20–07; 8:45 am]

BILLING CODE 4810–31–P

DEPARTMENT OF THE TREASURY

Alcohol and Tobacco Tax and Trade Bureau

27 CFR Part 45

[T.D. TTB–63; Re: T.D. TTB–26]

RIN 1513–AA99

Removal of Tobacco Products and Cigarette Papers and Tubes, Without Payment of Tax, for United States Use in Law Enforcement Activities (2003R–268P)

AGENCY: Alcohol and Tobacco Tax and Trade Bureau, Treasury.

ACTION: Final rule; Treasury decision.

SUMMARY: This Treasury decision adopts as a final rule, without change, a temporary rule that allows manufacturers of tobacco products and cigarette papers and tubes to remove these articles without payment of tax for use by Federal agencies in law enforcement activities, and without inclusion of the otherwise required tax-exempt label.

DATES: *Effective Date:* November 21, 2007.

FOR FURTHER INFORMATION CONTACT: Amy Greenberg, Alcohol and Tobacco Tax and Trade Bureau, Regulations and Rulings Division, 1310 G Street, NW., Suite 200–E, Washington, DC 20220; telephone 202–927–8210; or e-mail *Amy.Greenberg@ttb.gov*.

SUPPLEMENTARY INFORMATION:

Statutory and Regulatory Provisions

Section 5704(b) of the Internal Revenue Code of 1986 (26 U.S.C. 5704(b)) provides that a manufacturer may, among other things, remove tobacco products and cigarette papers and tubes without payment of tax for use of the United States, in accordance with regulations prescribed by the Secretary of the Treasury. The regulations administered by the Alcohol and Tobacco Tax and Trade Bureau (TTB) include, in part 45 (27 CFR part 45), provisions that implement this aspect of section 5704(b). Section 45.31 of those regulations (27 CFR 45.31) previously set forth two circumstances in which manufacturers of tobacco products and cigarette papers and tubes were permitted to remove those articles without payment of Federal excise tax for gratuitous distribution under the supervision of a Federal agency. Neither of those circumstances included the removal of articles for use by Federal agencies in law enforcement activities.

In addition, Section 45.46 of the TTB regulations (27 CFR 45.46) provided that every package of tobacco products and cigarette papers and tubes removed under part 45 must have the words ''Tax-Exempt. For Use of U.S. Not To Be Sold.'' adequately imprinted on the package or on a label securely affixed to the package.

Publication of Temporary Rule

On April 15, 2005, TTB published in the **Federal Register** at 70 FR 19888, as T.D. TTB–26, a temporary rule that amended the TTB regulations to eliminate the need for manufacturers of tobacco products and cigarette papers and tubes to obtain a variance to remove their products without payment of tax for use by a Federal Agency in an investigation or other law enforcement activity. Under the temporary rule, the supplying of tobacco products and cigarette papers and tubes by manufacturers to Federal agencies continued to be voluntary. The changes to the regulations did not impose additional cost, compliance, or reporting burdens on manufacturers. The temporary rule revised § 45.31 by dividing that section into paragraphs (a) and (b) in order to include the substantive change and improve the readability of the section.

In addition, we amended § 45.46 by adding an exception to the tax exempt labeling requirements.

The Bureau received three comments on the temporary rule. One commenter specifically endorsed the temporary changes, recognizing that they would significantly help law enforcement

efforts. The second commenter, a cigarette importer, supported the temporary rule for purposes of facilitating law enforcement. The third commenter supported the principle of tax-free removals for certain purposes.

Based on the reasons set forth above and on comments received, we believe it is appropriate to adopt the temporary rule as a final rule without change.

Inapplicability of Delayed Effective Date Requirement

Because these regulations recognize an exemption to tax payment, relieve manufacturers of the requirement to file a variance, and are identical to temporary regulations currently in effect, it has been determined pursuant to 5 U.S.C. 553(d)(1) and (3) that good cause exists to issue these regulations without a delayed effective date.

Regulatory Flexibility Act

We certify that this regulation will not have a significant impact on a substantial number of small entities. This regulation provides greater flexibility for manufacturers of tobacco products and cigarette papers and tubes to remove these products without being subject to tax and imposes no new reporting, recordkeeping, or other administrative requirement. Therefore, no regulatory flexibility analysis is required.

Executive Order 12866

We have determined that this notice of final rulemaking is not a significant regulatory action as defined by Executive Order 12866. Therefore, a regulatory assessment is not required.

Drafting Information

Maria Mahone of the Knowledge Management Staff drafted this final rule.

List of Subjects in 27 CFR Part 45

Authority delegations (Government agencies), Cigars and cigarettes, Excise taxes, Labeling, Packaging and containers, Reporting and recordkeeping requirements, Tobacco.

The Regulatory Amendment

■ For the reasons discussed in the preamble, the temporary rule amending 27 CFR part 45 published in the **Federal Register** at 70 FR 19888 on April 15, 2005, is adopted as a final rule without change.

Signed: September 18, 2007.

John J. Manfreda,

Administrator.

Approved: November 5, 2007.

Timothy E. Skud,

Deputy Assistant Secretary (Tax, Trade, and Tariff Policy).

[FR Doc. E7–22703 Filed 11–20–07; 8:45 am]

BILLING CODE 4810–31–P

DEPARTMENT OF JUSTICE

28 CFR Part 0

[Tax Division Directive No. 135]

Redelegation of Authority To Compromise and Close Civil Claims

AGENCY: Department of Justice.

ACTION: Final rule.

SUMMARY: This Tax Division directive increases the settlement authority of the Chiefs of the Civil Trial Sections, the Court of Federal Claims Section, the Appellate Section, the Office of Review, and the Deputy Assistant Attorneys General, to compromise and close civil claims. In addition, this directive increases the discretionary redelegation of limited authority by a section chief to his or her assistant chiefs and reviewers. This directive supersedes Directive No. 105.

EFFECTIVE DATE: November 21, 2007.

FOR FURTHER INFORMATION CONTACT: Deborah Meland, Tax Division, Department of Justice, Washington, DC 20530, (202) 307–6567.

SUPPLEMENTARY INFORMATION: This rule relates to internal agency management. Therefore, pursuant to 5 U.S.C. 553, notice of proposed rulemaking and opportunity for comment are not required, and this rule may be made effective less than 30 days after publication in the **Federal Register**. This regulation is not a significant rule within the meaning of Executive Order 13866, as amended, and therefore was not reviewed by the Office of Management and Budget. Finally, this regulation does not have an impact on small entities and, therefore, is not subject to the Regulatory Flexibility Act. This action pertains to agency management, personnel and organization and does not substantially affect the rights or obligations of non-agency parties and, accordingly, is not a ''rule'' as that term is used by the Congressional Review Act (Subtitle E of the Small Business Regulatory Enforcement Fairness Act of 1996 (SBREFA)). Therefore, the reporting requirement of 5 U.S.C. 801 does not apply.

List of Subjects in 28 CFR Part 0

Authority delegations (Government agencies), Government employees, Organization and functions (Government agencies).

■ Accordingly, 28 CFR part 0 is amended as follows:

PART 0—ORGANIZATION OF THE DEPARTMENT OF JUSTICE

■ 1. The authority citation for part 0 continues to read as follows:

Authority: 5 U.S.C. 301; 28 U.S.C. 509, 510, 515–19.

■ 2. The Appendix to Subpart Y of Part 0 is amended by removing Tax Division Directive No. 105 and adding in its place Tax Division Directive No. 135, to read as follows:

Appendix to Subpart Y of Part 0—Redelegations of Authority To Compromise and Close Civil Claims

* * * * *

[Directive No. 135]

By virtue of the authority vested in me by Part 0 of Title 28 of the Code of Federal Regulations, particularly Sections 0.70, 0.160, 0.162, 0.164, 0.166, and 0.168, it is hereby ordered as follows:

Section 1. The Chiefs of the Civil Trial Sections, the Court of Federal Claims Section, and the Appellate Section are authorized to reject offers in compromise, regardless of amount, provided that such action is not opposed by the agency or agencies involved.

Section 2. Subject to the conditions and limitations set forth in Section 10 hereof, the Chiefs of the Civil Trial Sections and the Court of Federal Claims Section are authorized to:

(A) Accept offers in compromise in, settle administratively, and close (other than by compromise or by entry of judgment), all civil cases in which the amount of the Government's concession, exclusive of statutory interest, does not exceed $500,000;

(B) Accept offers in compromise in injunction or declaratory judgment suits against the United States in which the principal amount of the related liability, if any, does not exceed $500,000; and

(C) Accept offers in compromise in all other nonmonetary cases;

provided that such action is not opposed by the agency or agencies involved, and provided further that the proposed compromise or concession is not subject to reference to the Joint Committee on Taxation.

Section 3. The Chiefs of the Civil Trial Sections and the Court of Federal Claims Section are authorized on a case-by-case basis to redelegate in writing to their respective Assistant Section Chiefs or Reviewers the authority delegated to them in Section 1 hereof to reject offers, and in Section 2 hereof, to accept offers in compromise in, settle administratively, and close (other than by compromise or by entry of judgment), all civil cases in which the

amount of the Government's concession, exclusive of statutory interest, does not exceed $250,000; provided that such redelegation is not made to the attorney-of-record in the case. The redelegations pursuant to this section shall be by memorandum signed by the Section Chief, which shall be placed in the Department of Justice file for the applicable case.

Section 4. Subject to the conditions and limitations set forth in Section 10 hereof, the Chief of the Appellate Section is authorized to:

(A) Accept offers in compromise with reference to litigating hazards of the issue(s) on appeal in all civil cases (other than claims for attorneys' fees, litigation expenses and court costs) in which the amount of the Government's concession, exclusive of statutory interest, does not exceed $500,000;

(B) Accept offers in compromise in injunction [see sec. 2(B)] or declaratory judgment suits against the United States in which the principal amount of the related liability, if any, does not exceed $500,000;

(C) Accept offers in compromise in, or settle administratively, all civil claims for attorneys' fees, litigation expenses and court costs in which the aggregate amount of the Government's concession on these claims does not exceed $200,000, and in which the aggregate amount of the Government's concession in the case, exclusive of statutory interest, does not exceed $500,000; and

(D) Accept offers in compromise in all other nonmonetary cases which do not involve issues concerning collectibility;

provided that (i) such acceptance is not opposed by the agency or agencies involved or the chief of the section in which the case originated, and (ii) the proposed compromise is not subject to reference to the Joint Committee on Taxation.

Section 5. The Chief of the Appellate Section is authorized on a case-by-case basis to redelegate in writing to the Appellate Section's Assistant Section Chiefs the authority delegated to the Chief of the Appellate Section in Section 1 hereof to reject offers, and in Section 4 hereof, to:

(A) Accept offers in compromise with reference to litigation hazards of the issue(s) on appeal in all civil cases (other than claims for attorneys' fees, litigation expenses and court costs) in which the amount of the Government's concession, exclusive of statutory interest, does not exceed $250,000; and

(B) Accept offers in compromise in, or settle administratively, all civil claims for attorneys' fees, litigation expenses and court costs in which the aggregate amount of the Government's concession on these claims does not exceed $100,000, and in which the aggregate amount of the Government's concession in the case, exclusive of statutory interest, does not exceed $250,000;

provided that such redelegation is not made to the attorney-of-record in the case. The redelegations pursuant to this section shall be by memorandum signed by the Chief of the Appellate Section, which shall be placed in the Department of Justice file for the applicable case.

Section 6. Subject to the conditions and limitations set forth in Section 10 hereof, the Chief of the Office of Review is authorized to:

(A) Accept offers in compromise and settle administratively claims against the United States in all civil cases in which the amount of the Government's concession, exclusive of statutory interest, does not exceed $1,500,000; and

(B) Accept offers in compromise and close (other than by compromise or by entry of judgment), claims by the United States in all civil cases in which the difference between the gross amount of the original claim and the proposed settlement does not exceed $1,500,000 or 15 percent of the original claim, whichever is greater;

(C) Accept offers in compromises in all nonmonetary cases; and

(D) Reject offers in compromise or disapprove concessions, regardless of amount;

provided that such action is not opposed by the agency or agencies involved or the chief of the section to which the case is assigned, and provided further that the proposed compromise or concession is not subject to reference to the Joint Committee on Taxation.

Section 7. The Chief, Office of Review, is authorized on a case-by-case basis to redelegate in writing to the offices' Assistant Section Chief or Reviewer the authority delegated to the Chief, Office of Review in Section 6 hereof to reject offers, and in Section 6 hereof, to accept offers in compromise in, settle administratively, and close (other than by compromise or by entry of judgment), all civil cases in which the amount of the Government's concession, exclusive of statutory interest, does not exceed $750,000; provided that such redelegation is not made to the attorney-of-record in the case. The redelegations pursuant to this section shall be made by memorandum signed by the Section Chief, which shall be placed in the Department of Justice file for the applicable case.

Section 8. Subject to the conditions and limitations set forth in Section 10 hereof, each of the Deputy Assistant Attorneys General is authorized to:

(A) Accept offers in compromise and settle administratively claims against the United States in all civil cases in which the amount of the Government's concession, exclusive of statutory interest, does not exceed $2,000,000;

(B) Accept offers in compromise and close (other than by compromise or by entry of judgment), claims by the United States in all civil cases in which the difference between the gross amount of the original claim and the proposed settlement does not exceed $2,000,000 or 15 percent of the original claim, whichever is greater;

(C) Accept offers in compromise in all nonmonetary cases; and

(D) Reject offers in compromise or disapprove concessions, regardless of amount;

provided that such action is not opposed by the agency or agencies involved and the proposed compromise or concession is not subject to reference to the Joint Committee on Taxation.

Section 9. Subject to the conditions and limitations set forth in Section 10 hereof, United States Attorneys are authorized to:

(A) Reject offers in compromise of judgments in favor of the United States, regardless of the amount;

(B) Accept offers in compromise of judgments in favor of the United States where the amount of the judgment does not exceed $300,000; and

(C) Terminate collection activity by his or her office as to judgments in favor of the United States which do not exceed $300,000 if the United States Attorney concludes that the judgment is uncollectible;

provided that such action has the concurrence in writing of the agency or agencies involved, and provided further that this authorization extends only to judgments which have been formally referred to the United States Attorney for collection.

Section 10. The authority redelegated herein shall be subject to the following conditions and limitations;

(A) When, for any reason, the compromise or concession of a particular claim, as a practical matter, will control or adversely influence the disposition of other claims totaling more than the respective amounts designated in Sections 3, 4, 5, 6, 7, 8, and 9 hereof, the case shall be forwarded for review at the appropriate level for the cumulative amount of the affected claims;

(B) When, because of the importance of a question of law or policy presented, the position taken by the agency or agencies or by the United States Attorney involved, or any other considerations, the person otherwise authorized herein to take final action is of the opinion that the proposed disposition should be reviewed at a higher level, the case shall be forwarded for such review;

(C) If the Department has previously submitted a case to the Joint Committee on Taxation leaving one or more issues unresolved, any subsequent compromise or concession in that case must be submitted to the Joint Committee, whether or not the overpayment exceeds the amount specified in Section 6405 of the Internal Revenue Code;

(D) Nothing in this Directive shall be construed as altering any provision of Subpart Y of Part 0 of Title 28 of the Code of Federal Regulations requiring the submission of certain cases to the Attorney General, the Associate Attorney General, or the Solicitor General;

(E) Authority to approve recommendations that the Government confess error in or to concede cases on appeal is excepted from the foregoing redelegations; and

(F) The Assistant Attorney General, at any time, may withdraw any authority delegated by this Directive as it relates to any particular case or category of cases, or to any part thereof.

Section 11. With respect to a claim by the United States (also sometimes referred to as a claim on behalf of the United States), the term ''offer in compromise'' as used in this Directive is any settlement of such a claim, except settlements in which the United States would receive nothing or virtually nothing in exchange for giving up its claim; and the term ''to close (other than by compromise or entry of judgment),'' refers to a settlement under which the United States

would receive nothing, or virtually nothing in exchange for giving up its claim.

Section 12. For a claim against the United States, the term ''offer in compromise'' as used in this Directive is any settlement of such a claim, except settlements in which the United States would receive nothing, or virtually nothing, in exchange for conceding the claim against it; and the term to ''settle administratively,'' means a settlement in which the United States would receive nothing, or virtually nothing, for conceding the claim against it.

Section 13. This Directive supersedes Tax Division Directive No. 105, effective June 14, 1995.

Section 14. This Directive shall become effective on November 21, 2007.

Dated: October 26, 2007.

Richard T. Morrison,

Acting Assistant Attorney General.

[FR Doc. E7–22702 Filed 11–20–07; 8:45 am]

BILLING CODE 4410–16–P

DEPARTMENT OF HOMELAND SECURITY

Coast Guard

33 CFR Part 165

[COTP Guam 07–005]

RIN 1625–AA87

Security Zone; Tinian, Commonwealth of the Northern Mariana Islands

AGENCY: Coast Guard, DHS.

ACTION: Final rule.

SUMMARY: The Coast Guard is changing a permanent security zone in waters adjacent to the island of Tinian, Commonwealth of the Northern Mariana Islands (CNMI). Review of the established zone indicates that its scope is overly-broad and that it imposes an unnecessary and unsustainable enforcement burden on the Coast Guard. This change is intended to narrow the zone's scope so it more accurately reflects current enforcement needs.

DATES: This rule is effective December 21, 2007.

ADDRESSES: Comments and material received from the public, as well as documents indicated in this preamble as being available in the docket, are part of docket COTP Guam 07–005 and are available for inspection and copying at Coast Guard Sector Guam between 7 a.m. and 3:30 p.m., Monday through Friday, except Federal holidays.

FOR FURTHER INFORMATION CONTACT: Lieutenant Commander John Winter, U.S. Coast Guard Sector Guam at (671) 355–4861.

SUPPLEMENTARY INFORMATION:

Regulatory Information

On August 17, 2007, we published a notice of proposed rulemaking (NPRM) entitled Security Zone; Tinian, Commonwealth of the Northern Mariana Islands in the **Federal Register** (72 FR 46185). We received no letters commenting on the proposed rule. No public meeting was requested, and none was held.

Background and Purpose

The security zones at Tinian codified in 33 CFR 165.1403 were first established on November 14, 1986 (51 FR 42220, November 24, 1986), as requested by the U.S. Navy in order to prevent injury or damage to persons and equipment incident to the mooring of the first Maritime Preposition Ships in the port. In addition to describing a larger security zone that is enforced when a Maritime Position Ship is moored at the site, the regulation, as currently written, establishes a permanent 50-yard security zone around Moorings A and B when no vessel is moored there. The zone is approximately 100 nautical miles from the nearest Coast Guard surveillance assets, a distance that hinders our ability to patrol it regularly.

A recent review of the 50-yard zone indicates that patrolling it is unnecessary except when the Navy needs to ensure availability of the mooring space, which is signaled by the anchoring of mooring balls. The purpose of this rule is to change the smaller zone from one that is activated all the time to one that is activated only when necessary. This change reflects our current enforcement needs more accurately and eliminates our need to travel 100 miles to patrol the zone when enforcement is unnecessary.

In addition, we are changing the section heading of this regulation to reflect CNMI's proper name and the fact that the section describes two security zones. We also made it easier to distinguish the two zones by describing them in separate paragraphs in 33 CFR 165.1403(a). Finally, we are clarifying that, while these regulations are in effect at all times, the security zones will only be activated—and thus subject to enforcement—when necessary.

Discussion of Comments and Changes

We did not receive any comments in response to our NPRM. No changes were made to the regulation text proposed in the NPRM.

Regulatory Evaluation

This rule is not a ''significant regulatory action'' under section 3(f) of Executive Order 12866, Regulatory Planning and Review, and does not require an assessment of potential costs and benefits under section 6(a)(3) of that Order. The Office of Management and Budget has not reviewed it under that Order.

The Coast Guard expects the economic impact of this rule to be so minimal that a full Regulatory Evaluation is unnecessary. This expectation is based on the nature of the change (diminishing an established security zone's enforcement period), which is likely to further minimize the economic impact of an established rule.

Small Entities

Under the Regulatory Flexibility Act (5 U.S.C. 601–612), we have considered whether this rule will have a significant economic impact on a substantial number of small entities. The term ''small entities'' comprises small businesses, not-for-profit organizations that are independently owned and operated and are not dominant in their fields, and governmental jurisdictions with populations of less than 50,000.

The Coast Guard certifies under 5 U.S.C. 605(b) that this rule will not have a significant economic impact on a substantial number of small entities. Due to the nature of the change (diminishing an established security zone's enforcement period), we anticipate that it will further reduce any economic impact of the established rule. If you think that your business, organization, or governmental jurisdiction qualifies as a small entity and that this rule would have a significant economic impact on it, please submit a comment (see **ADDRESSES**) explaining why you think it qualifies and how and to what degree this rule would economically affect it.

Assistance for Small Entities

Under section 213(a) of the Small Business Regulatory Enforcement Fairness Act of 1996 (Pub. L. 104–121), we want to assist small entities in understanding this rule so that they can better evaluate its effects on them and participate in the rulemaking. If the rule would affect your small business, organization, or governmental jurisdiction and you have questions concerning its provisions or options for compliance, please contact Lieutenant Commander John Winter, U.S. Coast Guard Sector Guam, (671) 355–4861. The Coast Guard will not retaliate against small entities that question or complain about this rule or any policy or action of the Coast Guard.

Collection of Information

This rule calls for no new collection of information under the Paperwork Reduction Act of 1995 (44 U.S.C. 3501–3520).

Federalism

A rule has implications for federalism under Executive Order 13132, Federalism, if it has a substantial direct effect on State or local governments and would either preempt State law or impose a substantial direct cost of compliance on them. We have analyzed this rule under that Order and have determined that it does not have implications for federalism.

Unfunded Mandates Reform Act

The Unfunded Mandates Reform Act of 1995 (2 U.S.C. 1531–1538) requires Federal agencies to assess the effects of their discretionary regulatory actions. In particular, the Act addresses actions that may result in the expenditure by a State, local, or tribal government, in the aggregate, or by the private sector of $100,000,000 or more in any one year. Though this rule will not result in such expenditure, we do discuss the effects of this rule elsewhere in this preamble.

Taking of Private Property

This rule will not affect a taking of private property or otherwise have taking implications under Executive Order 12630, Governmental Actions and Interference with Constitutionally Protected Property Rights.

Civil Justice Reform

This rule meets applicable standards in sections 3(a) and 3(b)(2) of Executive Order 12988, Civil Justice Reform, to minimize litigation, eliminate ambiguity, and reduce burden.

Protection of Children

We have analyzed this rule under Executive Order 13045, Protection of Children from Environmental Health Risks and Safety Risks. This rule is not an economically significant rule and does not create an environmental risk to health or risk to safety that may disproportionately affect children.

Indian Tribal Governments

This rule does not have tribal implications under Executive Order 13175, Consultation and Coordination with Indian Tribal Governments, because it does not have a substantial direct effect on one or more Indian tribes, on the relationship between the Federal Government and Indian tribes, or on the distribution of power and responsibilities between the Federal Government and Indian tribes.

Energy Effects

We have analyzed this rule under Executive Order 13211, Actions Concerning Regulations That Significantly Affect Energy Supply, Distribution, or Use. We have determined that it is not a ''significant energy action'' under that order because it is not a ''significant regulatory action'' under Executive Order 12866 and is not likely to have a significant adverse effect on the supply, distribution, or use of energy. The Administrator of the Office of Information and Regulatory Affairs has not designated it as a significant energy action. Therefore, it does not require a Statement of Energy Effects under Executive Order 13211.

Technical Standards

The National Technology Transfer and Advancement Act (NTTAA) (15 U.S.C. 272 note) directs agencies to use voluntary consensus standards in their regulatory activities unless the agency provides Congress, through the Office of Management and Budget, with an explanation of why using these standards would be inconsistent with applicable law or otherwise impractical. Voluntary consensus standards are technical standards (e.g., specifications of materials, performance, design, or operation; test methods; sampling procedures; and related management systems practices) that are developed or adopted by voluntary consensus standards bodies.

This rule does not use technical standards. Therefore, we did not consider the use of voluntary consensus standards.

Environment

We have analyzed this rule under Commandant Instruction M16475.lD and Department of Homeland Security Management Directive 5100.1, which guide the Coast Guard in complying with the National Environmental Policy Act of 1969 (NEPA) (42 U.S.C. 4321–4370f), and have concluded that there are no factors in this case that would limit the use of a categorical exclusion under section 2.B.2 of the Instruction. Therefore, this rule is categorically excluded, under figure 2–1, paragraph (34)(g) of the Instruction, from further environmental documentation. That provision excludes regulations establishing or changing security zones.

A final ''Environmental Analysis Check List'' and a final ''Categorical Exclusion Determination'' are available in the docket where indicated under **ADDRESSES**.

List of Subjects in 33 CFR Part 165

Harbors, Marine safety, Navigation (water), Reports and recordkeeping requirements, Security measures, Waterways.

■ For the reasons set out in the preamble, the Coast Guard amends 33 CFR part 165 as follows:

PART 165—REGULATED NAVIGATION AREAS AND LIMITED ACCESS AREAS

■ 1. The authority citation for part 165 continues to read as follows:

Authority: 33 U.S.C. 1226, 1231; 46 U.S.C. Chapter 701; 50 U.S.C. 191, 195; 33 CFR 1.05–1, 6.04–1, 6.04–6, and 160.5; Pub. L. 107–295, 116 Stat. 2064; Department of Homeland Security Delegation No. 0170.1.

■ 2. In § 165.1403, revise the section heading and paragraph (a) to read as follows:

§ 165.1403 Security Zones; Tinian, Commonwealth of the Northern Mariana Islands.

(a) *Location.* The following areas are security zones:

(1) The waters of the Pacific Ocean off Tinian between 14°59′04.9″ N, 145°34′58.6″ E to 14°59′20.1″ N, 145°35′41.5″ E to 14°59′09.8″ N, 145°36′02.1″ E to 14°57′49.3″ N, 145°36′28.7″ E to 14°57′29.1″ N, 145°35′31.1″ E and back to 14°59′04.9″ N, 145°34′58.6″ E. This zone will be enforced when one, or more, of the Maritime Preposition Ships is in the zone or moored at Mooring A located at 14°58′57.0″ N and 145°35′40.8″ E or Mooring B located at 14°58′15.9″ N, 145°35′54.8″ E.

■ (2) Additionally, a 50-yard security zone in all directions around Moorings A and B will be enforced when no vessels are moored thereto but mooring balls are anchored and on station.

Note to § 165.1403(a): All positions of latitude and longitude are from International Spheroid, Astro Pier 1944 (Saipan) Datum (NOAA Chart 81071).

* * * * *

Dated: November 9, 2007.

William Marhoffer,

Captain, U.S. Coast Guard, Captain of the Port Guam.

[FR Doc. E7–22694 Filed 11–20–07; 8:45 am]

BILLING CODE 4910–15–P

DEPARTMENT OF VETERANS AFFAIRS

38 CFR Parts 1 and 2

RIN 2900–AM73

Transfer of Duties of Former VA Board of Contract Appeals

AGENCY: Department of Veterans Affairs.

ACTION: Final rule.

SUMMARY: This document removes provisions in Department of Veterans Affairs (VA) regulations concerning VA's former Board of Contract Appeals and provides authority for other hearing officials to hear certain salary offset matters that formerly could be heard by officials of that Board. A new Civilian Board of Contract Appeals was established within the General Services Administration (GSA) to hear and decide contract disputes between certain Government contractors and Executive agencies. The Board of Contract Appeals that existed at VA was terminated and its cases under the Contract Disputes Act of 1978 were transferred to the new Civilian Board of Contract Appeals. These amendments are necessary due to section 847 of the National Defense Authorization Act for Fiscal Year 2006.

DATES: *Effective Date:* November 21, 2007.

FOR FURTHER INFORMATION CONTACT: William F. Russo, Director, Regulations Management (00REG), Office of Regulation Policy and Management, Department of Veterans Affairs, 810 Vermont Avenue, NW., Washington, DC 20420, 202–273–9515. (This is not a toll-free number.)

SUPPLEMENTARY INFORMATION: VA's former Board of Contract Appeals had been established under regulations promulgated pursuant to the Contract Disputes Act of 1978, as amended, 41 U.S.C. 601–613, to resolve disputes between VA and its contractors concerning final decisions by VA's contracting officers. VA vested certain other responsibilities in the Chairman and other personnel of the Board of Contract Appeals, consistent with the Contract Disputes Act, as amended.

On January 6, 2006, Public Law 109–163, the National Defense Authorization Act for Fiscal Year 2006, was enacted. Effective January 6, 2007, section 847 of that law terminated, among other civilian Boards of Contract Appeals, VA's Board of Contract Appeals and transferred its cases to a new Civilian Board of Contract Appeals vested with authority to, among other things, resolve disputes over decisions of VA contracting officers and its contractors. The new Civilian Board of Contract Appeals, which is part of GSA, published rules of procedure in an interim rule on July 5, 2007, in the **Federal Register** (72 FR 36794).

VA is removing all provisions currently in our regulations in 38 CFR concerning VA's former Board of Contract Appeals and delegations of authority to its officials, to reflect the termination of VA's former Board of Contract Appeals under the provisions of section 847 and the transfer from VA of certain responsibilities concerning access to that Board's orders.

In 38 CFR 1.552, ''Public access to information that affects the public when not published in the **Federal Register** as constructive notice,'' paragraph (a) currently includes provisions stating that ''[a]ll final orders in such actions as entertained by the Contract Appeals Board * * * will be kept currently indexed by the office of primary program responsibility or the Manager, Administrative Services, as determined by the Secretary or designee.'' Paragraph (b) currently states that ''[t]he voting records of the Contract Appeals Board will be maintained in a public reading facility in the Office of the Board in Central Office and made available to the public upon request.''

GSA now maintains copies of decisions of the former VA Board of Contract Appeals and these are available on GSA's Web site. Since passage of the Contract Disputes Act of 1978, VA's Board of Contract Appeals (the term which replaced ''Contract Appeals Board'') had not maintained any voting records. The voting records referred to in § 1.552(b) are stored by the National Archives and Records Administration. This final rule is therefore amending § 1.552 to remove the references to VA's former responsibilities concerning public access to those orders and voting records.

This final rule also amends VA's regulations on administrative wage garnishment (AWG) in 38 CFR 1.923 and Federal salary offset in § 1.983 to remove references to Board of Contract Appeals Administrative Judges or Hearing Examiners as hearing officials in AWG and Federal salary offset proceedings.

In accordance with 31 U.S.C. 3720D and 31 CFR 285.11, VA published the AWG regulation at § 1.923. Paragraph (c) of § 1.923 currently states that the hearing official involved in the AWG proceedings may be any VA Board of Contract Appeals Administrative Judge or Hearing Examiner, or any other VA hearing official. We are amending § 1.923(c) to remove the reference to the VA Board of Contract Appeals Administrative Judge or Hearing Examiner.

This final rule also amends 38 CFR 1.983, one of VA's regulations pertaining to Federal salary offset. VA published Federal salary offset regulations at 38 CFR 1.980 through 1.995 in accordance with 5 U.S.C. 5514 and OPM government-wide regulations found at 5 CFR part 550, subpart K. 38 CFR 1.983(b)(8) currently states that a Board of Contract Appeals Administrative Judge or Hearing Examiner shall conduct salary offset hearings for VA employees. Section 1.983(b)(8) goes on to state that a VA Board of Contract Appeals Administrative Judge or Hearing Examiner may also conduct hearings for non-VA employees. VA is in this final rule revising § 1.983(b)(8). The changes remove the references to VA Board of Contract Appeals Administrative Judges or Hearing Examiners as hearing officials. The new provisions concerning who can serve as hearing officials are in accord with 5 U.S.C. 5514(a)(2)(D), which provides that an employee is entitled to a hearing on the existence or amount of the debt, as well as the offset schedule, and that such hearing must be conducted by either an administrative law judge or someone not under the supervision or control of the head of the creditor agency. Therefore, the references to Board of Contract Appeals Administrative Judges or Hearing Examiners are being replaced with references to a VA administrative law judge or a hearing official from an agency other than VA.

Administrative Procedure Act

This final rule concerns agency organization, procedure, and practice. The rule merely concerns delegations of authority to agency officers or employees and the removal of procedural provisions concerning the former VA Board of Contract Appeals to reflect the statutory transfer of its functions outside VA. Accordingly, the prior notice and comment and delayed effective date provisions of 5 U.S.C. 553 do not apply to this rule.

Paperwork Reduction Act of 1995

This document contains no provisions constituting a collection of information under the Paperwork Reduction Act of 1995 (44 U.S.C. 3501–3521).

Regulatory Flexibility Act

The initial and final regulatory flexibility analysis requirements of sections 603 and 604 of the Regulatory Flexibility Act, 5 U.S.C. 601–612, are not applicable to this rule because a

notice of proposed rulemaking is not required for this rule. Even so, the Secretary of Veterans Affairs hereby certifies that this final rule will not have a significant economic impact on a substantial number of small entities as they are defined in the Regulatory Flexibility Act. This final rule would not directly affect any small entities. Therefore, this final rule is also exempt pursuant to 5 U.S.C. 605(b) from the regulatory flexibility analysis requirements of sections 603 and 604.

Executive Order 12866

Executive Order 12866 directs agencies to assess all costs and benefits of available regulatory alternatives and, when regulation is necessary, to select regulatory approaches that maximize net benefits (including potential economic, environmental, public health and safety, and other advantages; distributive impacts; and equity). The Executive Order classifies a ''significant regulatory action,'' requiring review by the Office of Management and Budget (OMB) unless OMB waives such review, as any regulatory action that is likely to result in a rule that may: (1) Have an annual effect on the economy of $100 million or more or adversely affect in a material way the economy, a sector of the economy, productivity, competition, jobs, the environment, public health or safety, or State, local, or tribal governments or communities; (2) create a serious inconsistency or otherwise interfere with an action taken or planned by another agency; (3) materially alter the budgetary impact of entitlements, grants, user fees, or loan programs or the rights and obligations of recipients thereof; or (4) raise novel legal or policy issues arising out of legal mandates, the President's priorities, or the principles set forth in the Executive Order.

The economic, interagency, budgetary, legal, and policy implications of this final rule have been examined and it has been determined not to be a significant regulatory action under Executive Order 12866.

Unfunded Mandates

The Unfunded Mandates Reform Act of 1995, codified at 2 U.S.C. 1532, requires agencies to prepare an assessment of anticipated costs and benefits before issuing any rule that may result in the expenditure by State, local, and tribal governments, in the aggregate, or by the private sector, of $100 million or more (adjusted annually for inflation) in any year. This final rule would have no such effect on State, local, and tribal governments, or on the private sector.

Catalog of Federal Domestic Assistance

There is no Catalog of Federal Domestic Assistance number for this final rule.

List of Subjects

38 CFR Part 1

Administrative practice and procedure, Government employees.

38 CFR Part 2

Authority delegations (Government agencies).

Approved: November 14, 2007.

Gordon H. Mansfield,

Acting Secretary of Veterans Affairs.

■ For the reasons set forth in the preamble, the Department of Veterans Affairs amends 38 CFR parts 1 and 2 as follows:

PART 1—GENERAL PROVISIONS

■ 1. The authority citation for part 1 continues to read as follows:

Authority: 38 U.S.C. 501(a), and as noted in specific sections.

§ 1.552 [Amended]

■ 2. Amend § 1.552 by:

■ a. In paragraph (a), removing ''All final orders in such actions as entertained by the Contract Appeals Board, those'' and adding, in its place, ''Those''.

■ b. Removing paragraph (b).

■ c. Redesignating paragraphs (c) and (d) as new paragraphs (b) and (c), respectively.

§§ 1.780 through 1.783 [Removed]

■ 3. Remove the undesignated center heading immediately preceding § 1.780 and remove and reserve §§ 1.780 through 1.783.

§ 1.923 [Amended]

■ 4. In § 1.923, amend the introductory text of paragraph (c) by removing ''VA Board of Contract Appeals Administrative Judge or Hearing Examiner, or any other''.

■ 5. Revise § 1.983(b)(8) to read as follows:

§ 1.983 Notice requirements before salary offset of debts not involving benefits under the laws administered by VA.

* * * * *

(b) * * *

(8) The VA employee's right to request an oral or paper hearing on the Secretary or appropriate designee's determination of the existence or amount of the debt, or the percentage of disposable pay to be deducted each pay period, so long as a request is filed by the employee as prescribed by the Secretary. The hearing official for the hearing requested by a VA employee must be either a VA administrative law judge or a hearing official from an agency other than VA. Any VA hearing official may conduct an oral or paper hearing at the request of a non-VA employee on the determination by an appropriately designated official of the employing agency of the existence or amount of the debt, or the percentage of disposable pay to be deducted each pay period, so long as a hearing request is filed by the non-VA employee as prescribed by the employing agency.

* * * * *

PART 2—DELEGATIONS OF AUTHORITY

■ 6. The authority citation for part 2 continues to read as follows:

Authority: 5 U.S.C. 302, 552(a); 38 U.S.C. 501, 512, 515, 1729, 1729A, 5711; 44 U.S.C. 3702, and as noted in specific sections.

§ 2.4 [Amended]

■ 7. Amend § 2.4 by removing ''the Chairman, Board of Contract Appeals;''.

■ 8. Amend § 2.5 by:

■ a. Removing paragraph (b).

■ b. Redesignating paragraph (c) as new paragraph (b).

■ c. Revising the authority citation.

The revision reads as follows:

§ 2.5 Delegation of authority to certify copies of documents, records, or papers in Department of Veterans Affairs files.

* * * * *

(Authority: 38 U.S.C. 302, 501, 512).

[FR Doc. E7–22705 Filed 11–20–07; 8:45 am]

BILLING CODE 8320–01–P

ENVIRONMENTAL PROTECTION AGENCY

40 CFR Part 52

[EPA–R01–OAR–2006–0704; A–1–FRL–8492–1]

Approval and Promulgation of Air Quality Implementation Plans; Maine; Emission Statements Reporting and Definitions

AGENCY: Environmental Protection Agency (EPA).

ACTION: Direct final rule.

SUMMARY: EPA is approving State Implementation Plan (SIP) revisions submitted by the State of Maine. These revisions update Maine's criteria pollutant emissions reporting program and list of terms and associated definitions used in Maine's air pollution

control regulations. The intended effect of this action is to approve these revisions into the Maine SIP. This action is being taken under the Clean Air Act.

DATES: This direct final rule will be effective January 22, 2008, unless EPA receives adverse comments by December 21, 2007. If adverse comments are received, EPA will publish a timely withdrawal of the direct final rule in the **Federal Register** informing the public that the rule will not take effect.

ADDRESSES: Submit your comments, identified by Docket ID Number EPA–R01–OAR–2006–0704 by one of the following methods:

1. *http://www.regulations.gov:* Follow the on-line instructions for submitting comments.

2. *E-mail: arnold.anne@epa.gov*; Fax: (617) 918–0047; Mail: ''Docket Identification Number EPA–R01–OAR–2006–0704'', Anne Arnold, U.S. Environmental Protection Agency, EPA New England Regional Office, One Congress Street, Suite 1100 (mail code CAQ), Boston, MA 02114–2023.

3. *Hand Delivery or Courier:* Deliver your comments to: Anne Arnold, Manager, Air Quality Planning Unit, Office of Ecosystem Protection, U.S. Environmental Protection Agency, EPA New England Regional Office, One Congress Street, 11th floor, (CAQ), Boston, MA 02114–2023. Such deliveries are only accepted during the Regional Office's normal hours of operation. The Regional Office's official hours of business are Monday through Friday, 8:30 to 4:30, excluding legal holidays.

Instructions: Direct your comments to Docket ID No. EPA–R01–OAR–2006–0704. EPA's policy is that all comments received will be included in the public docket without change and may be made available online at *http://www.regulations.gov*, including any personal information provided, unless the comment includes information claimed to be Confidential Business Information (CBI) or other information whose disclosure is restricted by statute. Do not submit through *http://www.regulations.gov*, or e-mail, information that you consider to be CBI or otherwise protected. The *http://www.regulations.gov* Web site is an ''anonymous access'' system, which means EPA will not know your identity or contact information unless you provide it in the body of your comment. If you send an e-mail comment directly to EPA without going through *http://www.regulations.gov* your e-mail address will be automatically captured and included as part of the comment that is placed in the public docket and made available on the Internet. If you submit an electronic comment, EPA recommends that you include your name and other contact information in the body of your comment and with any disk or CD–ROM you submit. If EPA cannot read your comment due to technical difficulties and cannot contact you for clarification, EPA may not be able to consider your comment. Electronic files should avoid the use of special characters, any form of encryption, and be free of any defects or viruses.

Docket: All documents in the electronic docket are listed in the *http://www.regulations.gov* index. Although listed in the index, some information is not publicly available, i.e., CBI or other information whose disclosure is restricted by statute. Certain other material, such as copyrighted material, is not placed on the Internet and will be publicly available only in hard copy form. Publicly available docket materials are available either electronically in *http://www.regulations.gov* or in hard copy at the Office of Ecosystem Protection, U.S. Environmental Protection Agency, EPA New England Regional Office, One Congress Street, Suite 1100, Boston, MA. EPA requests that if at all possible, you contact the contact listed in the **FOR FURTHER INFORMATION CONTACT** section to schedule your inspection. The Regional Office's official hours of business are Monday through Friday, 8:30 to 4:30, excluding legal holidays.

In addition, copies of the state submittal and EPA's technical support document are also available for public inspection during normal business hours, by appointment at the State Air Agency, the Bureau of Air Quality Control, Department of Environmental Protection, First Floor of the Tyson Building, Augusta Mental Health Institute Complex, Augusta, ME 04333–0017.

FOR FURTHER INFORMATION CONTACT: Bob McConnell, Air Quality Planning Unit, EPA New England Regional Office, One Congress Street, Suite 1100–CAQ, Boston, MA 02114–2023, telephone number 617–918–1046, fax number 617–918–0046, e-mail *mcconnell.robert@epa.gov.*

SUPPLEMENTARY INFORMATION: Organization of this document. The following outline is provided to aid in locating information in this preamble.

I. Background and Purpose
II. Chapter 137, Emission Statements
A. Background and Purpose
B. Evaluation of Maine's Submittal
1. 40 CFR 51.15(a); Pollutants
2. 40 CFR 51.20(b); Emission Thresholds
3. 40 CFR 51.25; Geographic Coverage
4. 40 CFR 51.30(a); Reporting Due Date
5. Appendix A to Subpart A of 40 CFR Part 51; Table 2a
C. Results of EPA's Analysis of State's Submittal
III. Chapter 100, Definitions
IV. Summary of SIP Revisions
V. Final Action
VI. Statutory and Executive Order Reviews

I. Background and Purpose

On July 14, 2004, and February 8, 2006, the State of Maine submitted formal revisions to its State Implementation Plan (SIP). These SIP submittals consist of revisions to Maine's Chapter 137 Emission Statements rule, and Chapter 100 list of definitions for terms used in Maine's air pollution control regulations. EPA approved previous versions of each of these rules, and is approving the revised rules in today's action.

II. Chapter 137, Emission Statements

A. *Background.* Sections 182(a)(3)(B) and 184(b)(2) of the Clean Air Act (the Act) requires that states develop and submit, as SIP revisions, rules which establish annual reporting requirements for precursors of ozone from stationary sources. To meet this requirement, on January 3, 1994, Maine submitted its Chapter 137 Emission Statements rule to EPA and requested EPA incorporate the rule into the state's SIP. EPA did so by publishing, on January 10, 1995, a final rule approving Maine's Chapter 137 emission statements reporting rule into the state's SIP (see 60 FR 2524). Subsequently, on June 10, 2002, EPA published the Consolidated Emissions Reporting Rule (CERR) as a final rule in the **Federal Register** (67 FR 39602). This rule requires additional reporting obligations for states, chief among them a requirement that states collect air emissions data from stationary point sources for emissions of fine particulate matter (particulate matter with a diameter less than or equal to 2.5 micrometers, sometimes noted as $PM_{2.5}$) and ammonia (NH3), which is a precursor to $PM_{2.5}$ formation, and report this information to EPA. On July 14, 2004, Maine submitted a revised version of its Chapter 137 Emission Statements rule to EPA. Maine had revised the rule in accordance with the provisions of EPA's CERR, and requested that EPA incorporate the revised rule into the state's SIP.

B. *Evaluation of Maine's Submittal.* The CERR requires that states collect a variety of information pertaining to air emissions from industrial sources in the state, and report this information to

EPA. The discussion below describes how Maine's modified Chapter 137 Emission Statements rule conforms with the requirements of EPA's CERR stated in 40 CFR Part 51.

1. 40 CFR 51.15(a); Pollutants. 40 CFR 51.15(a)(1) requires that states report emissions of sulfur oxides, volatile organic compounds (VOC), nitrogen oxides, carbon monoxide, lead and lead compounds, primary $PM_{2.5}$, primary PM_{10}, and ammonia. Maine's revised Chapter 137 emission statements regulation requires collection of emissions data for all of these pollutants from industrial sources in the state.

2. 40 CFR 51.20(b); Emission thresholds. 40 CFR 51.20(b) requires that states collect emissions data from all stationary sources that emit at levels above those shown in Table 1 of Appendix A to subpart 51. Maine's revised Chapter 137 rule contains emission reporting thresholds that are more stringent than required by Table 1 of Appendix A, and as such the rule complies with EPA's 40 CFR 51.20(b) reporting requirement.

3. 40 CFR 51.25; Geographic coverage. 40 CFR 51.25 requires collection of point source data from all sources in the state that emit pollutants above the level specified in 40 CFR 51.20(b). Maine's revised Chapter 137 rule requires statewide reporting, and as such complies with this requirement.

4. 40 CFR 51.30(a); Reporting due date. 40 CFR 51.30(a) requires that states report their point source data to EPA no later than 17 months after the end of the calendar year in which the emissions occurred. Maine's revised Chapter 137 rule requires that sources report their emissions to the state within 6 months of the end of the year in which the emissions occurred, so the state will have sufficient time to collect, review, and quality assure the data prior to submitting it to EPA.

5. Appendix A to Subpart A of 40 CFR Part 51; Table 2a. Table 2a lists the data elements that states must report to EPA. The provisions of Maine's revised Chapter 137 Emission Statements rule will enable the state to submit all of the required point source data elements listed in Table 2a of Appendix A.

C. *Results of EPA's analysis of Maine's submittal.* EPA's review has found that Maine's revised Chapter 137 Emission Statements rule meets all of the requirements of EPA's CERR, and therefore EPA is approving the revised rule into the state's SIP.

EPA takes approval action on SIP revisions based on the authority of section 110(a) of the Act. Pursuant to section 110 (a)(1) of the Act, states are required to revise their SIP when EPA promulgates or revises a national ambient air quality standard (NAAQS). Maine's Chapter 137 Emission Statements regulation contains, in addition to criteria pollutant reporting provisions, requirements that will enable the state to collect data on certain hazardous air pollutants (HAPs) and greenhouse gas emissions. The HAP and greenhouse gas requirements are needed for Maine to implement programs at the state level, but are not required for federal reporting purposes under the CERR. Therefore, Maine did not include the Chapter 137 HAP and greenhouse gas requirements in its SIP revision request to EPA and these provisions are not being approved into the state's SIP.

The specific requirements of Maine's Chapter 137 regulation and EPA's evaluation of these requirements are detailed in a memorandum dated August 7, 2006, entitled ''Technical Support Document (TSD) for revisions to the Maine SIP of Chapter 100, Definitions Regulation, and Chapter 137, Emission Statements.'' The TSD and Maine's Chapter 137 Emission Statements rule are available in the docket supporting this action.

III. Chapter 100, Definitions

Maine's Chapter 100 definitions regulation provides definitions for the terms used in the state's air pollution control regulations and emission standards. EPA previously approved Maine's Chapter 100 definitions in a final rule published in the **Federal Register** on October 15, 1996 (61 FR 53639). Since that time, Maine has amended its Chapter 100 list of definitions on numerous occasions in conjunction with SIP submittals it has made over time for various programs such as the Title V permitting, best available control technology, and prevention of significant deterioration programs. EPA has reviewed the list of terms and found them to conform to the applicable EPA guidance, and so we are approving Maine's revised Chapter 100 list of definitions into the state's SIP. The specific requirements of Maine's Chapter 100 Definitions regulation and EPA's evaluation of these requirements are detailed in the TSD which is available in the docket supporting this action.

IV. Summary of SIP Revisions

For the reasons outlined above, EPA is approving Maine's revised Chapter 100 Definitions, and revised Chapter 137 Emission Statements regulations and incorporating these regulations into the state's SIP. Maine's Chapter 100 definitions regulation provides definitions for the terms used in the state's air pollution control regulations, many of which are federally enforceable. The state's Chapter 137 Emission Statements regulation has been amended to conform with the EPA's Consolidated Emission Statements Rule.

V. Final Action

EPA is approving Maine's revised Chapter 100 list of definitions and revised Chapter 137 Emission Statements rule into the state's SIP.

The EPA is publishing this action without prior proposal because the Agency views this as a noncontroversial amendment and anticipates no adverse comments. However, in the proposed rules section of this **Federal Register** publication, EPA is publishing a separate document that will serve as the proposal to approve the SIP revision should relevant adverse comments be filed. This rule will be effective January 22, 2008 without further notice unless the Agency receives relevant adverse comments by December 21, 2007.

If the EPA receives such comments, then EPA will publish a notice withdrawing the final rule and informing the public that the rule will not take effect. All public comments received will then be addressed in a subsequent final rule based on the proposed rule. The EPA will not institute a second comment period on the proposed rule. All parties interested in commenting on the proposed rule should do so at this time. If no such comments are received, the public is advised that this rule will be effective on January 22, 2008 and no further action will be taken on the proposed rule. Please note that if EPA receives adverse comment on an amendment, paragraph, or section of this rule and if that provision may be severed from the remainder of the rule, EPA may adopt as final those provisions of the rule that are not the subject of an adverse comment.

VI. Statutory and Executive Order Reviews

Under Executive Order 12866 (58 FR 51735, October 4, 1993), this action is not a ''significant regulatory action'' and therefore is not subject to review by the Office of Management and Budget. For this reason, this action is also not subject to Executive Order 13211, ''Actions Concerning Regulations That Significantly Affect Energy Supply, Distribution, or Use'' (66 FR 28355, May 22, 2001). This action merely approves state law as meeting Federal requirements and imposes no additional requirements beyond those imposed by

state law. Accordingly, the Administrator certifies that this rule will not have a significant economic impact on a substantial number of small entities under the Regulatory Flexibility Act (5 U.S.C. 601 *et seq.*). Because this rule approves pre-existing requirements under state law and does not impose any additional enforceable duty beyond that required by state law, it does not contain any unfunded mandate or significantly or uniquely affect small governments, as described in the Unfunded Mandates Reform Act of 1995 (Pub. L. 104–4).

This rule also does not have tribal implications because it will not have a substantial direct effect on one or more Indian tribes, on the relationship between the Federal Government and Indian tribes, or on the distribution of power and responsibilities between the Federal Government and Indian tribes, as specified by Executive Order 13175 (65 FR 67249, November 9, 2000). This action also does not have Federalism implications because it does not have substantial direct effects on the States, on the relationship between the national government and the States, or on the distribution of power and responsibilities among the various levels of government, as specified in Executive Order 13132 (64 FR 43255, August 10, 1999), because it merely approves a state rule implementing a federal standard, and does not alter the relationship or the distribution of power and responsibilities established in the Clean Air Act. This rule also is not subject to Executive Order 13045 ''Protection of Children from Environmental Health Risks and Safety Risks'' (62 FR 19885, April 23, 1997), because it approves a state rule implementing a Federal standard.

In reviewing SIP submissions, EPA's role is to approve state choices, provided that they meet the criteria of the Clean Air Act. In this context, in the absence of a prior existing requirement for the State to use voluntary consensus standards (VCS), EPA has no authority to disapprove a SIP submission for failure to use VCS. It would thus be inconsistent with applicable law for EPA, when it reviews a SIP submission, to use VCS in place of a SIP submission that otherwise satisfies the provisions of the Clean Air Act. Thus, the requirements of section 12(d) of the National Technology Transfer and Advancement Act of 1995 (15 U.S.C. 272 note) do not apply. This rule does not impose an information collection burden under the provisions of the Paperwork Reduction Act of 1995 (44 U.S.C. 3501 *et seq.*).

The Congressional Review Act, 5 U.S.C. 801 *et seq.*, as added by the Small Business Regulatory Enforcement Fairness Act of 1996, generally provides that before a rule may take effect, the agency promulgating the rule must submit a rule report, which includes a copy of the rule, to each House of the Congress and to the Comptroller General of the United States. EPA will submit a report containing this rule and other required information to the U.S. Senate, the U.S. House of Representatives, and the Comptroller General of the United States prior to publication of the rule in the **Federal Register**. A major rule cannot take effect until 60 days after it is published in the **Federal Register**. This action is not a ''major rule'' as defined by 5 U.S.C. 804(2).

Under section 307(b)(1) of the Clean Air Act, petitions for judicial review of this action must be filed in the United States Court of Appeals for the appropriate circuit by January 22, 2008. Interested parties should comment in response to the proposed rule rather than petition for judicial review, unless the objection arises after the comment period allowed for in the proposal. Filing a petition for reconsideration by the Administrator of this final rule does not affect the finality of this rule for the purposes of judicial review nor does it extend the time within which a petition for judicial review may be filed, and shall not postpone the effectiveness of such rule or action. This action may not be challenged later in proceedings to enforce its requirements (*see* section 307(b)(2)).

List of Subjects in 40 CFR Part 52

Environmental protection, Air pollution control, Carbon monoxide, Incorporation by reference, Lead, Nitrogen dioxide, Ozone, Particulate matter, Reporting and recordkeeping requirements, Sulfur oxides, Volatile organic compounds.

Dated: October 25, 2007.

Robert W. Varney,

Regional Administrator, EPA New England.

■ Part 52 of chapter I, title 40 of the Code of Federal Regulations is amended as follows:

PART 52—[AMENDED]

■ 1. The authority citation for part 52 continues to read as follows:

Authority: 42 U.S.C. 7401 *et seq.*

Subpart U—Maine

■ 2. Section 52.1020 is amended by removing paragraph (c)(34)(i)(C) and by adding paragraph (c)(62) as follows:

§ 52.1020 Identification of plan.

* * * * *

(c) * * *

(62) Revisions to the State Implementation Plan submitted by the Maine Department of Environmental Protection on July 14, 2004, and February 8, 2006.

(i) Incorporation by reference.

(A) Chapter 100 of the Maine Department of Environmental Protection Regulations, ''Definitions,'' effective in the State of Maine December 24, 2005.

(B) Chapter 137 of the Maine Department of Environmental Protection Regulations, ''Emission Statements,'' effective in the State of Maine on July 6, 2004, with the exception of the following sections which the state did not include in its SIP revision request: section 137.1.C; section 137.1.E; section 137.1.F; section 137.2.A through F; section 137.2.H; section 137.3.B; section 137.3.C; section 137.4.D(4), from the sentence beginning with ''Greenhouse gases'' to the end of this section; the note within section 137.D(5); section 137(E), and; Appendix A.

(ii) Additional materials.

(A) Nonregulatory portions of these submittals.

(B) Correspondence from David W. Wright of the Maine DEP dated June 6, 2006, indicating which portions of Chapter 137 should not be incorporated into the State's SIP.

■ 3. In § 52.1031, Table 52.1031 is amended by adding a new entry to the existing state citation for Chapter 100, and by revising the entry for Chapter 137 to read as follows:

§ 52.1031 EPA-approved Maine regulations.

* * * * *

TABLE 52.1031.—EPA-APPROVED RULES AND REGULATIONS

State citation	Title/subject	Date adopted by State	Date approved by EPA	**Federal Register** citation	52.1020	
*	*	*	*	*	*	*
100	Definitions	12/1/2005	11/21/07	[Insert **Federal Register** page number where the document begins].	(c)(62)	Revised to add definitions associated with SIP submittals made between 7/19/95 and 12/1/05.
*	*	*	*	*	*	*
137	Emission Statements.	12/17/04	11/21/07	[Insert **Federal Register** page number where the document begins].	(c)(62)	Revised to incorporate changes required by EPA's consolidated emissions reporting rule. The entire rule is approved with the exception of HAP and greenhouse gas reporting requirements which were not included in the state's SIP revision request.
*	*	*	*	*	*	*

Note 1. The regulations are effective statewide unless stated otherwise in comments or title section.

[FR Doc. E7–22596 Filed 11–20–07; 8:45 am]
BILLING CODE 6560–50–P

DEPARTMENT OF COMMERCE

National Oceanic and Atmospheric Administration

50 CFR Part 648

[Docket No. 070827484–7581–02]

RIN 0648–AV99

Fisheries of the Northeastern United States; Recreational Management Measures for the Summer Flounder Fishery; Fishing Year 2008

AGENCY: National Marine Fisheries Service (NMFS), National Oceanic and Atmospheric Administration (NOAA), Commerce.

ACTION: Final rule.

SUMMARY: Through this final rule, NMFS is implementing coastwide summer flounder recreational management measures to complete the rulemaking process initiated in March 2007. This action is necessary to implement appropriate coastwide management measures to be in place on January 1, 2008, following the expiration of the current state-by-state conservation equivalency management measures on December 31, 2007. The intent of these measures is to prevent overfishing of the summer flounder resource during the interim between the aforementioned expiration of the 2007 recreational measures and the implementation of measures for 2008.

DATES: Effective 0001 hours, Eastern Standard Time (EST), January 1, 2008.

ADDRESSES: Copies of the Supplemental Environmental Assessment, as well as the original Environmental Assessment, Regulatory Impact Review, and Initial Regulatory Flexibility Analysis (EA/RIR/IRFA) completed for the 2007 recreational management measures are available from Patricia A. Kurkul, Regional Administrator, NMFS Northeast Region, 1 Blackburn Drive, Gloucester, MA 01930–2298. The Supplemental Environmental Assessment is also accessible via the Internet at *http://www.nero.noaa.gov*.

FOR FURTHER INFORMATION CONTACT: Michael P. Ruccio, Fishery Policy Analyst, (978) 281–9104.

SUPPLEMENTARY INFORMATION: The summer flounder recreational fishery is managed cooperatively under the provisions of the Summer Flounder, Scup, and Black Sea Bass Fishery Management Plan (FMP) by the Mid-Atlantic Fishery Management Council (Council) and the Atlantic States Marine Fisheries Commission (Commission), in consultation with the New England and South Atlantic Fishery Management Councils. The Council prepared the FMP under the authority of the Magnuson-Stevens Fishery Conservation and Management Act (Magnuson-Stevenson Act), 16 U.S.C. 1801 *et seq.* Regulations implementing the FMP appear at 50 CFR part 648, with subparts A (general provisions) and G (summer flounder) pertaining to the summer flounder fishery. General regulations governing U.S. fisheries also appear at 50 CFR part 600. States manage summer flounder within 3 nautical miles of their coasts, under the Commission's plan for summer flounder, scup, and black sea bass. The Federal regulations govern vessels fishing in the exclusive economic zone (EEZ), as well as vessels possessing a Federal fisheries permit, regardless of where they fish.

Under the FMP and regulations, the Council may recommend and NMFS may approve one of two approaches for managing the summer flounder recreational fishery: Conservation equivalency (either state-by-state or regional) with a precautionary default backstop approved by NMFS; or coastwide management measures. The FMP requires that the Council review updated assessment and fishery information on an annual basis and recommend to NMFS both a Total Allowable Landings (TAL) and recreational management measures.

For the 2007 recreational fishery, the Council recommended and NMFS approved state-by-state conservation equivalency. When the conservation equivalency measures expire at the end of a fishing year, coastwide measures found at §§ 648.103(a) and 648.105(a) become effective. Typically, the coastwide measures are adjusted during the annual rulemaking process that establishes recreational management measures to ensure that the coastwide measures are sufficient to constrain recreational landings to the established harvest limit. This is done even if conservation equivalency is implemented, as was done for 2007, because the coastwide measures serve as the interim measures in place in the following year (i.e., 2008) until new measures are put in place. This is typically completed by late spring or early summer. However, because of timing issues that arose from the reauthorization of the Magnuson-Stevens Act that granted authority to extend the summer flounder rebuilding period, and a subsequent increase to the 2007 TAL, NMFS did not implement

any revised 2007 coastwide measures to serve as the 2008 regulatory backstop after conservation equivalency expires. Prior to this rule, the coastwide measures in the regulations were a 4–fish possession limit, a 17–inch (43.18–cm) minimum fish size, and no closed season. These measures were determined to be insufficient to ensure that the 2007 recreational harvest limit would not be exceeded. Additional detail on the background and development of the 2007 recreational management measures and the 2008 coastwide interim management measures are contained in the preamble of the respective proposed rules (72 FR 12158; March 15, 2007, and 72 FR55166; September 28, 2007) and are not repeated here.

This action is necessary to complete the final detail of the 2007 summer flounder recreational management measures rulemaking and should not be confused with the upcoming process to develop the 2008 recreational management measures. The Council will begin development of the 2008 recreational management measures, based on updated assessment information and 2007 fishery information, through its Monitoring Committee meeting in November 2007. The Council will consider the Monitoring Committee's recommendations for 2008 management measures during its December 2007 meeting in Secaucus, NJ.

A proposed rule to implement summer flounder coastwide recreational interim management measures of an 18.5–inch (46.99–cm) minimum fish size, a 4–fish possession limit, and a year-round season was published in the **Federal Register** on September 28, 2007 (72 FR 55166), with public comment accepted through October 15, 2007. This final rule implements the interim summer flounder coastwide management measures proposed by NMFS, as presented in the proposed rule and outlined as follows.

The Commission's Technical Committee (TC) conducted analysis that indicated an 18.5–inch (46.99–cm) minimum fish size with a 4–fish possession limit and a year-round season would constrain landings to 90 percent of the emergency rule increased harvest limit (2,181,735 fish). By implementing these measures, the normal regulatory process that occurs when conservation equivalency is utilized to manage the summer flounder recreational fishery will be completed. These measures will replace the existing coastwide measures regulatory language of a 17–inch (43.18–cm) minimum fish size, a 4–fish possession limit, and no closed season, and serve as the default management measures in place on January 1, 2008, after conservation equivalent measures have expired. These new coastwide measures will remain effective until they are either superceded by conservation equivalency measures or revised, as needed, to ensure that the 2008 recreational harvest limit will not be exceeded.

These measures are sufficiently risk averse as interim measures to ensure that overfishing will not occur while new measures, based on the updated 2007 stock assessment, are developed for implementation in mid–2008. Summer flounder are typically found offshore during colder winter months and only limited recreational fisheries occur in the southern range of the stock during spring. Marine Recreational Fisheries Statistical Survey (MRFSS) data from 2001–2006 show that less than 2 percent of the annual harvest occurs in the first two MRFSS data collection periods (called waves) of the year (January-April). Approximately 31 percent of the coastwide summer flounder harvest occurs in Wave 3 (May-June).

Based on recent years' development and rulemaking schedules when conservation equivalency has been utilized for summer flounder recreational management measures, it is expected that updated measures, based on 2007 recreational landings and adjusted for any quota overages, would be in place before Wave 4 (July-August) and the bulk of summer flounder recreational fisheries begin in 2008. If different coastwide measures are recommended by the Council and Commission and implemented by NMFS for 2008 management, it is expected that those measures would be in place during Wave 2 (March-April 2008).

Comments and Responses

Three comments were received regarding the proposed 2008 interim coastwide recreational management measures. Two of the comments received did not address any aspect of the proposed 2008 interim coastwide recreational management measures: One stated that summer flounder quotas should be reduced in 2008, and the other expressed general displeasure with recreational fishing opportunities. NMFS anticipates publishing a proposed rule for the 2008 summer flounder TAL before December 2007. That proposed rule, when published, would be the appropriate rule to address comments on quota reductions, therefore those two comments are not addressed here.

Comment 1: The commenter inquired why a coastwide measure would be implemented that may penalize states that have used conservation equivalency measures as an effective means of constraining recreational harvests to or below the state's respective target.

Response: This commenter appears to have confused the 2008 interim coastwide management measures with the yet to be developed 2008 management measures. As previously stated in the preamble to this final rule, the measures implemented by this rule will remain effective until replaced, by either conservation equivalency or updated coastwide measures, sometime in late spring or early summer of 2008. Coastwide measures have always become the management measures in place in the interim between the expiration of conservation equivalency and the implementation of new measures that are based on updated assessment and fishery information. The measures of this rule are necessary to ensure that the relatively minor amount of summer flounder recreational harvest that occurs in late winter will be adequately constrained by appropriate measures. The Council has not yet initiated the process that will develop the measures that will be utilized to manage the bulk of the 2008 recreational fisheries that occur during summer and fall. The Council may consider both state-by-state or regional conservation equivalency or modification of the coastwide measures to manage the 2008 summer flounder recreational fishery.

Classification

The Administrator, Northeast Region, NMFS, determined that this final rule is necessary for the conservation and management of the summer flounder fishery and that it is consistent with the Magnuson-Stevens Fishery Conservation and Management Act and other applicable law.

This final rule has been determined to be not significant for purposes of Executive Order 12866.

A final regulatory flexibility analysis (FRFA) was prepared. The FRFA incorporates the IRFA, a summary of the significant issues raised by the public comments in response to the IRFA, and NMFS responses to those comments, and a summary of the analyses completed to support the action. A copy of this analysis is available from the NMFS (see **ADDRESSES**).

Final Regulatory Flexibility Analysis

Statement of Objective and Need

A description of the reasons why this action is being taken, and the objectives

of and legal basis for this final rule are explained in the preambles to the proposed rule and this final rule and are not repeated here.

Summary of Significant Issues Raised in Public Comments

A summary of the comments received, and the responses thereto, are contained in the ''Comments and Responses'' section of this preamble. No significant issues were raised by those submitting comments, therefore; no changes to the proposed rule were required to be made as a result of the public comments.

Description and Estimate of Number of Small Entities to Which This Rule Will Apply

The proposed measures could affect any of the 967 vessels possessing a Federal charter/party permit for summer flounder in 2006, the most recent year for which complete permit data are available. However, only 331 of these vessels reported active participation in the recreational summer flounder fishery in 2006.

Description of Projected Reporting, Recordkeeping, and Other Compliance Requirements

No additional reporting, recordkeeping, or other compliance requirements are included in this final rule.

Description of the Steps Taken to Minimize Economic Impact on Small Entities

NMFS undertook this additional recreational management measure rulemaking to implement interim coastwide measures that are designed to constrain recreational harvest to the 2007 recreational harvest limit as increased by emergency rule on January 19, 2007 (72 FR 2458), and extended for the remainder of 2007 (72 FR 40077; July 23, 2007). The need to develop and implement these measures resulted from public comments received on the 2007 recreational management measures proposed rule (72 FR 12158; March 15, 2007) that indicated the originally proposed measures (Alternative 2) for a 1–fish possession limit, a 19–inch (48.26–cm) minimum fish size, and no closed season would be severely restrictive following the implementation of the increased 2007 TAL.

During the 2007 recreational management measures rulemaking, NMFS ultimately implemented a final rule (72 FR 30492; June 1, 2007) to implement state-by-state conservation equivalency to manage the 2007 summer flounder recreational fishery. This rendered the coastwide measures moot for 2007; however, the coastwide measures are necessary as the interim management measures for the first third of 2008, after conservation equivalency has expired but before updated measures are developed and recommended for implementation by the Council. Recreational harvest data indicate that only a small percentage of the summer flounder fishery is likely to occur during the interim recreational management measures effective period. However, the Alternative 2 coastwide measure available to NMFS during the recreational management measure rulemaking development was, as the public indicated, highly restrictive under the higher 17.112–million-lb (7,762–mt) TAL implemented and extended by emergency rule. Alternative 2 had been developed and analyzed to constrain landings to the recreational harvest limit resulting from the lower, pre-emergency TAL of 12.983 million lb (5,889 mt). NMFS indicated in the 2007 recreational management measures final rule that it would undertake separate notice-and-comment rulemaking to propose and implement coastwide measures for the interim period of 2008 that were analyzed for effectiveness relative to the final, higher 2007 TAL.

The 18.5–inch (46.99–cm) minimum fish size with a 4–fish possession limit and a year-round season (Alternative 3) implemented by this rule minimizes, to the extent possible, the economic impact on small entities while ensuring that the mortality objectives of the FMP and summer flounder rebuilding program will be met in the first third of 2008. The Council-proposed coastwide management measures of Alternative 2 (a 1–fish possession limit, a 19–inch (48.26–cm) minimum fish size, and no closed season) would have been unduly restrictive, constraining recreational harvest to an estimated 55 percent of the 2007 recreational harvest limit resulting from the emergency rule increased TAL. By contrast, the measures implemented by this rule are projected to constrain the recreational harvest to 90 percent of the increased TAL. The increased number of fish available for landing under Alternative 3 results in a lower impact to small entities that participate in the early season fishery by allowing slightly larger fish to be retained. The previous coastwide management measures in regulation (Alternative 1) for a 4–fish possession limit, a 17–inch (43.18–cm) minimum fish size, and no closed season was projected not to constrain recreational harvest to the 2007 recreational harvest limit. Therefore, the measures implemented by this rule are the only alternative that minimizes economic impacts by allowing the maximum potential harvest, to the extent practicable, yet achieves the biological objectives of the FMP.

Small Entity Compliance Guide

Section 212 of the Small Business Regulatory Enforcement Fairness Act of 1996 states that, for each rule or group of related rules for which an agency is required to prepare a FRFA, the agency shall publish one or more guides to assist small entities in complying with the rule, and shall designate such publications as ''small entity compliance guides.'' The agency shall explain the actions a small entity is required to take to comply with a rule or group of rules. As part of this rulemaking process, a letter to permit holders that also serves as the small entity compliance guide was prepared and will be sent to all holders of Federal party/charter permits issued for the summer flounder, scup, and black sea bass fisheries. In addition, copies of this final rule and the small entity compliance guide are available from NMFS (see **ADDRESSES**) and at the following Web site: *http://www.nero.noaa.gov*.

Dated: November 14, 2007.

Samuel D. Rauch III,

Deputy Assistant Administrator for Regulatory Programs,National Marine Fisheries Service.

■ For the reasons set out in the preamble, 50 CFR part 648 is amended as follows:

PART 648—FISHERIES OF THE NORTHEASTERN UNITED STATES

■ 1. The authority citation for part 648 continues to read as follows:

Authority: 16 U.S.C. 1801 *et seq.*

■ 2. In § 648.103, paragraph (b) is revised to read as follows:

§ 648.103 Minimum fish sizes.

* * * * *

(b) Unless otherwise specified pursuant to § 648.107, the minimum size for summer flounder is 18.5 inches (46.99 cm) TL for all vessels that do not qualify for a moratorium permit, and charter boats holding a moratorium permit if fishing with more than three crew members, or party boats holding a moratorium permit if fishing with passengers for hire or carrying more than five crew members.

* * * * *

■ 3. In § 648.105, the first sentence of paragraph (a) is revised to read as follows:

§ 648.105 Possession restrictions.

* * * * *

(a) Unless otherwise specified pursuant to § 648.107, no person shall possess more than four summer flounder in, or harvested from, the EEZ, unless that person is the owner or operator of a fishing vessel issued a summer flounder moratorium permit, or is issued a summer flounder dealer permit. * * *

* * * * *

[FR Doc. E7–22741 Filed 11–20–07; 8:45 am]

BILLING CODE 3510–22–S

Proposed Rules

Federal Register

Vol. 72, No. 224

Wednesday, November 21, 2007

This section of the FEDERAL REGISTER contains notices to the public of the proposed issuance of rules and regulations. The purpose of these notices is to give interested persons an opportunity to participate in the rule making prior to the adoption of the final rules.

NUCLEAR REGULATORY COMMISSION

10 CFR Part 50

RIN 3150–A101

Alternate Fracture Toughness Requirements for Protection Against Pressurized Thermal Shock Events; Reopening of Comment Period for Information Collection

AGENCY: Nuclear Regulatory Commission.

ACTION: Proposed rule: Reopening of comment period for information collection.

SUMMARY: The Nuclear Regulatory Commission (NRC) is reopening the comment period specific to the information collection aspects of a proposed rule published on October 3, 2007 (72 FR 56275), that would amend NRC's regulations to provide updated fracture toughness requirements for protection against pressurized thermal shock (PTS) events for pressurized water reactor (PWR) pressure vessels. The comment period for comments specific to the information collection aspects of the proposed rule, closed on November 2, 2007.

DATES: The comment period for comments specific to the information collection aspects of the proposed rule is reopened and now closes on December 17, 2007. Comments received after this date will be considered if it is practical to do so, but the Commission is able to ensure consideration only for comments received before this date.

ADDRESSES: Send comments on any aspect of the proposed information collections, including suggestions for reducing the burden and on the issues mentioned in the October 3, 2007, rulemaking, by December 17, 2007, to the Records and FOIA/Privacy Services Branch (T–5 F52), U.S. Nuclear Regulatory Commission, Washington, DC 20555–0001, or by Internet electronic mail to *INFOCOLLECTS@NRC.GOV* and to the Desk Officer, Office of Information and Regulatory Affairs, NEOP–10202, (3150–0011), Office of Management and Budget, Washington, DC 20503.

FOR FURTHER INFORMATION CONTACT: Harry Tovmassian, Office of Nuclear Reactor Regulation, U.S. Nuclear Regulatory Commission, Washington, DC 20555–0001, telephone (301) 415–3092, e-mail *hst@nrc.gov.*

SUPPLEMENTARY INFORMATION: On October 3, 2007 (72 FR 56275), the Nuclear Regulatory Commission (NRC) published for public comment a proposed rule that would amend its regulations to provide updated fracture toughness requirements for protection against PTS events for PWR pressure vessels. The proposed rule would provide new PTS requirements based on updated analysis methods. This action is desirable because the existing requirements are based on unnecessarily conservative probabilistic fracture mechanics analysis. This action would reduce regulatory burden for licensees, specifically those licensees that expect to exceed the existing requirements before the expiration of their licenses, while maintaining adequate safety. These new requirements would be voluntarily used by any PWR licensee as an alternative to complying with the existing requirements.

The NRC received several requests from public stakeholders to extend the comment period for the information collection aspects of the proposed rule. The comment period for the information collection is being reopened and now closes on December 17, 2007.

Dated at Rockville, Maryland, this 15th day of November 2007.

For the Nuclear Regulatory Commission.

Annette L. Vietti-Cook,

Secretary of the Commission.

[FR Doc. E7–22761 Filed 11–20–07; 8:45 am]

BILLING CODE 7590–01–P

NUCLEAR REGULATORY COMMISSION

10 CFR Part 71

Regulations for the Safe Transport of Radioactive Material; Notice of Document Availability and Request for Comments

AGENCY: U.S. Nuclear Regulatory Commission.

ACTION: Notice of document availability and request for comments on draft 2009 revision to International Atomic Energy Agency Regulations.

SUMMARY: The U.S. Nuclear Regulatory Commission (NRC) is seeking public comment on a draft revision of the International Atomic Energy Agency's (IAEA) ''Regulations for the Safe Transport of Radioactive Material'' (TS–R–1), which is scheduled for publication in 2009. The NRC and the U.S. Department of Transportation (DOT) jointly will be submitting comments on the draft document to the IAEA. We are requesting input from the public to assist in developing the U.S. comments.

DATES: Comments on the proposed 2009 revision of TS–R–1 will be accepted by the NRC until January 4, 2008. Comments received after this date will be considered if it is practical to do so, however we are only able to assure consideration for comments received on or before this date.

ADDRESSES: Members of the public are invited and encouraged to submit written comments to Michael T. Lesar, Chief, Rulemaking, Directives and Editing Branch, Mail Stop T6–D59, U.S. Nuclear Regulatory Commission, Washington, DC 20555–0001. Comments may be submitted by electronic mail to: *nrcrep@nrc.gov.* Comments may also be hand delivered to 11555 Rockville Pike, Rockville, Maryland 20852, between 7:45 a.m. and 4:15 p.m. on Federal workdays.

Copies of comments received may be viewed at the NRC's Public Document Room, One White Flint North, Public File Area O1–F21, 11555 Rockville Pike (First Floor), Rockville, Maryland.

FOR FURTHER INFORMATION CONTACT: Michele M. Sampson, Office of Nuclear Material Safety and Safeguards, USNRC, Washington, DC 20555–0001, telephone: (301) 492–3292; e-mail: *mxs14@nrc.gov.*

SUPPLEMENTARY INFORMATION:

I. Background

The IAEA periodically revises TS–R–1 to reflect new information and accumulated experience. The DOT is the U.S. competent authority before the IAEA for radioactive material transportation matters. The NRC provides technical support to the DOT in this regard, particularly with regard to Type B and fissile packages.

The IAEA recently released, for 120-day Member State review, a draft revision of TS–R–1 intended for publication in 2009. To assure opportunity for public involvement in the international regulatory development process, we are requesting input from the public on the proposed revisions to TS–R–1. At this time, comments are being solicited on the changes made from the 2005 edition which are included in the 2009 draft revision. To facilitate review, the IAEA has provided a summary Table of Changes document comparing the 2005 version of TS–R–1 to the proposed 2009 changes by paragraph. Any comments made should refer to the relevant paragraph number in the 2009 draft revision of TS–R–1, and when appropriate should propose alternative text.

II. Public Participation

The draft 2009 revision to TS–R–1 [ML073170348] and Table of Changes [ML073170368] documents are available at the NRC's Agencywide Document Access and Management System (ADAMS) Public Electronic Reading Room on the Internet, accessible through the NRC's public Web site at *http://www.nrc.gov.* This Web site provides text and image files of the NRC's public documents. The public can gain entry into ADAMS through the agency's public Web site at *http://www.nrc.gov/reading-rm/adams.html*, under Accession No. ML073170348, for the 2009 Draft version of TS–R–1, and Accession No. ML073170368, for the Table of Changes comparison document. The documents may also be viewed electronically on the public computers located at the NRC's Public Document Room (PDR), One White Flint North, 11555 Rockville Pike, Room O1–F21, Rockville, Maryland. The PDR reproduction contractor will copy documents for a fee. If you do not have access to ADAMS or if there are problems in accessing the documents located in ADAMS, contact the NRC PDR Reference Staff at (800) 397–4209, (301) 415–4737, or by e-mail to *pdr@nrc.gov.*

Comments should cite the publication date and page number of this **Federal Register** document. Comments must be submitted in writing (electronic file on disk in Microsoft Word format preferred) and are to include:

- Name;
- Address;
- Telephone number;
- E-mail address;
- Relevant paragraph number in the document being reviewed, and
- When appropriate, proposed alternative text.

The DOT and the NRC will review the comments received from industry and the public. Based in part on the information received, the U.S. will develop comments on the revised draft of TS–R–1 to be submitted to the IAEA by February 15, 2008.

Comments from the United States and other IAEA member states will be considered at an IAEA Transport Safety Standards Committee (TRANSSC) Meeting to be convened by IAEA on March 3–7, 2008, in Vienna, Austria. Subsequent domestic compatibility rulemakings by both NRC and DOT may be necessary after IAEA final publication of the 2009 revised TS–R–1.

Dated at Rockville, Maryland, this 15th day of November, 2007.

For the Nuclear Regulatory Commission.

David W. Pstrak,

Chief, Rules, Inspections, and Operations Branch, Division of Spent Fuel Storage and Transportation, Office of Nuclear Material Safety and Safeguards.

[FR Doc. E7–22759 Filed 11–20–07; 8:45 am]

BILLING CODE 7590–01–P

DEPARTMENT OF TRANSPORTATION

Federal Aviation Administration

14 CFR Part 39

[Docket No. FAA–2007–0216; Directorate Identifier 2007–NM–122–AD]

RIN 2120–AA64

Airworthiness Directives; McDonnell Douglas Model DC–8–55, DC–8F–54, and DC–8F–55 Airplanes; and Model DC–8–60, DC–8–70, DC–8–60F, and DC–8–70F Series Airplanes

AGENCY: Federal Aviation Administration (FAA), Department of Transportation (DOT).

ACTION: Notice of proposed rulemaking (NPRM).

SUMMARY: The FAA proposes to supersede an existing airworthiness directive (AD) that applies to certain McDonnell Douglas Model DC–8–55, DC–8F–54, and DC–8F–55 airplanes; and Model DC–8–60, DC–8–70, DC–8–60F, and DC–8–70F series airplanes. The existing AD currently requires a one-time inspection for previous repairs of the aft fuselage skin panel at the longeron 28 skin splice; repetitive inspections for cracks of the same area; and related investigative and corrective actions. The existing AD also provides optional actions for extending the repetitive inspection intervals. This proposed AD would re-define and more clearly describe the optional actions for extending the repetitive inspection intervals. This proposed AD results from our determination that the inspections and actions described in the existing AD do not adequately address the unsafe condition. We are proposing this AD to detect and correct cracks in the aft fuselage skin at the longeron 28 skin splice, which could lead to loss of structural integrity of the aft fuselage, resulting in rapid decompression of the airplane.

DATES: We must receive comments on this proposed AD by January 7, 2008.

ADDRESSES: You may send comments by any of the following methods:

- *Federal eRulemaking Portal:* Go to *http://www.regulations.gov.* Follow the instructions for submitting comments.
- *Fax:* 202–493–2251.
- *Mail:* U.S. Department of Transportation, Docket Operations, M–30, West Building Ground Floor, Room W12–140, 1200 New Jersey Avenue, SE., Washington, DC 20590.
- *Hand Delivery:* U.S. Department of Transportation, Docket Operations, M–30, West Building Ground Floor, Room W12–140, 1200 New Jersey Avenue, SE., Washington, DC 20590, between 9 a.m. and 5 p.m., Monday through Friday, except Federal holidays.

For service information identified in this AD, contact Boeing Commercial Airplanes, Long Beach Division, 3855 Lakewood Boulevard, Long Beach, California 90846, Attention: Data and Service Management, Dept. C1–L5A (D800–0024).

Examining the AD Docket

You may examine the AD docket on the Internet at *http://www.regulations.gov;* or in person at the Docket Management Facility between 9 a.m. and 5 p.m., Monday through Friday, except Federal holidays. The AD docket contains this proposed AD, the regulatory evaluation, any comments received, and other information. The street address for the Docket Office (telephone 800–647–5527) is in the **ADDRESSES** section. Comments will be available in the AD docket shortly after receipt.

FOR FURTHER INFORMATION CONTACT: Jon Mowery, Aerospace Engineer, Airframe Branch, ANM–120L, FAA, Los Angeles Aircraft Certification Office, 3960 Paramount Boulevard, Lakewood, California 90712–4137; telephone (562) 627–5322; fax (562) 627–5210.

SUPPLEMENTARY INFORMATION:

Comments Invited

We invite you to submit any relevant written data, views, or arguments regarding this proposed AD. Send your comments to an address listed in the **ADDRESSES** section. Include the docket number ''FAA–2007–0216; Directorate Identifier 2007–NM–122–AD'' at the beginning of your comments. We specifically invite comments on the overall regulatory, economic, environmental, and energy aspects of the proposed AD. We will consider all comments received by the closing date and may amend the proposed AD in light of those comments.

We will post all comments we receive, without change, to *http://www.regulations.gov,* including any personal information you provide. We will also post a report summarizing each substantive verbal contact we receive about this proposed AD.

Discussion

On January 5, 2007, we issued AD 2007–02–02, amendment 39–14889 (72 FR 3044, January 24, 2007), for certain McDonnell Douglas Model DC–8–55, DC–8F–54, and DC–8F–55 airplanes; and Model DC–8–60, DC–8–70, DC–8–60F, and DC–8–70F series airplanes. That AD requires a one-time inspection for previous repairs of the aft fuselage skin panel at the longeron 28 skin splice; repetitive inspections for cracks of the same area; related investigative and corrective actions; and reporting inspection findings to the manufacturer. That AD also provides optional actions for extending the repetitive inspection intervals. That AD resulted from a report indicating that a crack has been found in the aft fuselage skin at the longeron 28 skin splice. We issued that AD to detect and correct cracks in the aft fuselage skin at the longeron 28 skin splice, which could lead to loss of structural integrity of the aft fuselage, resulting in rapid decompression of the airplane.

Actions Since Existing AD Was Issued

Since we issued AD 2007–02–02, we have determined that the inspections and optional modification/repair described in that AD do not adequately address the unsafe condition. We concluded that more careful inspection of areas already repaired and reinforced by the installation of doublers was needed. Accordingly, we propose to re-define and more clearly describe certain inspections and the optional modification/repair to completely address the unsafe condition described in that AD.

FAA's Determination and Requirements of the Proposed AD

We have evaluated all pertinent information and identified an unsafe condition that is likely to develop on other airplanes of the same type design. For this reason, we are proposing this AD, which would supersede AD 2007–02–02, re-define the requirements of that AD, and clarify the optional modification/repair described in that AD which, if done, would allow extending the repetitive inspection intervals.

Changes to Existing AD

This proposed AD would re-define certain requirements and clarify the optional modification/repair of AD 2007–02–02. Since AD 2007–02–02 was issued, the AD format has been revised, and certain paragraphs have been rearranged. As a result, the corresponding paragraph identifiers have changed in this proposed AD, as listed in the following table:

REVISED PARAGRAPH IDENTIFIERS

Requirement in AD 2007–02–02	Corresponding requirement in this proposed AD
paragraph (a)	paragraph (f).
paragraph (b)	paragraph (g).
paragraph (c)	paragraph (h).

Costs of Compliance

There are approximately 508 airplanes of the affected design in the worldwide fleet. The FAA estimates that 244 airplanes of U.S. registry would be affected by this proposed AD. The average labor rate is $80 per work hour. This proposed AD would add no additional costs; however, we are repeating the costs from AD 2007–02–02 for the convenience of affected operators.

ESTIMATED COSTS

Action	Work hours	Cost per airplane	Fleet cost
Initial Inspection for doubler installation.	2 to 4	$160 to $320	$39,040 to $78,080.
Repetitive Inspections (per inspection cycle).	2 to 8	$160 to $640	$39,040 to $156,160.
Repair	164 to 184	$13,120 to $14,720	$3,201,280 to $3,591,680.

Authority for This Rulemaking

Title 49 of the United States Code specifies the FAA's authority to issue rules on aviation safety. Subtitle I, Section 106, describes the authority of the FAA Administrator. Subtitle VII, Aviation Programs, describes in more detail the scope of the Agency's authority.

We are issuing this rulemaking under the authority described in Subtitle VII, Part A, Subpart III, Section 44701, ''General requirements.'' Under that section, Congress charges the FAA with promoting safe flight of civil aircraft in air commerce by prescribing regulations for practices, methods, and procedures the Administrator finds necessary for safety in air commerce. This regulation is within the scope of that authority because it addresses an unsafe condition that is likely to exist or develop on products identified in this rulemaking action.

Regulatory Findings

We have determined that this proposed AD would not have federalism implications under Executive Order 13132. This proposed AD would not have a substantial direct effect on the States, on the relationship between the national Government and the States, or on the distribution of power and responsibilities among the various levels of government.

For the reasons discussed above, I certify that the proposed regulation:

1. Is not a ''significant regulatory action'' under Executive Order 12866;

2. Is not a ''significant rule'' under the DOT Regulatory Policies and Procedures (44 FR 11034, February 26, 1979); and

3. Will not have a significant economic impact, positive or negative, on a substantial number of small entities under the criteria of the Regulatory Flexibility Act.

We prepared a regulatory evaluation of the estimated costs to comply with this proposed AD and placed it in the AD docket. See the **ADDRESSES** section for a location to examine the regulatory evaluation.

List of Subjects in 14 CFR Part 39

Air transportation, Aircraft, Aviation safety, Safety.

The Proposed Amendment

Accordingly, under the authority delegated to me by the Administrator, the FAA proposes to amend 14 CFR part 39 as follows:

PART 39—AIRWORTHINESS DIRECTIVES

1. The authority citation for part 39 continues to read as follows:

Authority: 49 U.S.C. 106(g), 40113, 44701.

§ 39.13 [Amended]

2. The Federal Aviation Administration (FAA) amends § 39.13 by removing amendment 39–14889 (72 FR 3044, January 24, 2007) and adding the following new airworthiness directive (AD):

McDonnell Douglas: Docket No. FAA–2007–0216; Directorate Identifier 2007–NM–122–AD.

Comments Due Date

(a) The FAA must receive comments on this AD action by January 7, 2008.

Affected ADs

(b) This AD supersedes AD 2007–02–02.

Applicability

(c) This AD applies to McDonnell Douglas Model DC–8–55, DC–8F–54, DC–8F–55, DC–8–61, DC–8–62, DC–8–63, DC–8–61F, DC–8–62F, DC–8–63F, DC–8–71, DC–8–72, DC–8–73, DC–8–71F, DC–8–72F, and DC–8–73F airplanes, certificated in any category; as identified in Boeing Alert Service Bulletin DC8–53A080, dated June 22, 2004.

Unsafe Condition

(d) This AD results from our determination that the inspections and actions described in the existing AD do not adequately address the unsafe condition. We are issuing this AD to detect and correct cracks in the aft fuselage skin at the longeron 28 skin splice, which could lead to loss of structural integrity of the aft fuselage, resulting in rapid decompression of the airplane.

Compliance

(e) You are responsible for having the actions required by this AD performed within the compliance times specified, unless the actions have already been done.

Requirements of AD 2007–02–02

One-Time Inspection for Previous Repairs

(f) For all airplanes: At the applicable time in paragraph (f)(1) or (f)(2) of this AD, do a general visual inspection to determine if there are previous repairs of the aft fuselage skin panel at the longeron 28 skin splice; in accordance with the Accomplishment Instructions of Boeing Alert Service Bulletin DC8–53A080, dated June 22, 2004. Then do the applicable actions specified in paragraphs (g) and (h) of this AD.

(1) For airplanes that have accumulated fewer than 24,000 total flight cycles as of February 28, 2007 (the effective date of AD 2007–02–02): Within 24 months after February 28, 2007, or prior to accumulating 24,000 total flight cycles, whichever occurs later.

(2) For airplanes that have accumulated 24,000 total flight cycles or more as of February 28, 2007: Within 12 months after February 28, 2007.

Note 1: For the purposes of this AD, a general visual inspection is: ''A visual examination of an interior or exterior area, installation, or assembly to detect obvious damage, failure, or irregularity. This level of inspection is made from within touching distance unless otherwise specified. A mirror may be necessary to ensure visual access to all surfaces in the inspection area. This level of inspection is made under normally available lighting conditions such as daylight, hangar lighting, flashlight, or droplight and may require removal or opening of access panels or doors. Stands, ladders, or platforms may be required to gain proximity to the area being checked.''

Repetitive Inspections for Areas That Do Not Have a Previous Repair

(g) For areas that do not have a previous repair: Before further flight after the initial inspection in paragraph (f) of this AD, do general visual and high-frequency eddy current (HFEC) inspections for discrepancies at longeron 28 between the bolted connection of the tail section to forward of the flat aft pressure bulkhead, on both the left and right sides, and do all applicable related investigative and corrective actions before further flight. Do all actions in accordance with the Accomplishment Instructions of Boeing Alert Service Bulletin DC8–53A080, dated June 22, 2004. Repeat the general visual and HFEC inspections thereafter at intervals not to exceed 2,000 flight cycles until an optional action in paragraph (i) of this AD is accomplished.

Repetitive Inspections and Repair for Areas That Have a Previous Repair

(h) For areas that have a previous repair: Within 24 months after accomplishing the initial inspection in paragraph (f) of this AD, remove the previous repair(s), and install a local repair, in accordance with Boeing DC–8 Service Rework Drawing SR08530032, dated January 13, 2004, including Boeing Parts List PL SR08530032, dated January 7, 2004, Boeing Advance Engineering Order, Advanced Drawing Change A, dated April 1, 2004, and Boeing Engineering Order, dated January 13, 2004. Do the inspections in paragraph (j) of this AD thereafter at the applicable interval specified in paragraph (j)(1) or (j)(2) of this AD.

New Requirements of This AD

Optional Modification/Repair

(i) Installing a full-length preventive modification, doing a full-length repair, or doing a local repair, in accordance with Boeing DC–8 Service Rework Drawing SR08530032, dated January 13, 2004, including Boeing Parts List PL SR08530032, dated January 7, 2004, Boeing Advance Engineering Order, Advanced Drawing Change A, dated April 1, 2004, and Boeing Engineering Order, dated January 13, 2004, ends the repetitive inspection intervals specified in paragraph (g) of this AD.

Extended Repetitive Inspection Intervals

(j) After removing the previous repair(s) and doing the actions specified in paragraph (h) of this AD or doing any optional repair or modification described in paragraph (i) of this AD: Do the actions described in paragraph (j)(1) or (j)(2) of this AD as applicable, in accordance with the Accomplishment Instructions of Boeing Alert Service Bulletin DC8–53A080, dated June 22, 2004. If any discrepancy is discovered during any inspection required by this paragraph, before further flight, repair the discrepancy using a method approved in accordance with the procedures specified in paragraph (l) of this AD.

(1) For areas that have been repaired on airplanes that do have internal finger doublers installed: Within 30,000 flight cycles after doing the optional repair or modification, do a general visual inspection for discrepancies along all four external edges of the doublers. Repeat the inspection thereafter at intervals not to exceed 5,000 flight cycles.

(2) For areas that have been repaired on airplanes that do not have internal finger doublers installed: Do the actions specified in paragraph (j)(2)(i) or (j)(2)(ii) of this AD, as applicable.

(i) For any repair that is 12 inches or less along the longeron: Within 15,000 flight cycles after removing the previous repair(s) and doing the actions specified in paragraph (h) of this AD or doing any optional repair or modification specified in paragraph (i) of this AD, do a general visual inspection for discrepancies along all four external edges of the doublers. Repeat the general visual inspection thereafter at intervals not to exceed 5,000 flight cycles.

(ii) For any repair that is greater than 12 inches in length along the longeron: Within 15,000 flight cycles after removing the previous repair(s) and doing the actions specified in paragraph (h) of this AD or doing any optional repair or modification specified in paragraph (i) of this AD, do a low-frequency eddy current (LFEC) inspection for discrepancies along all four external edges of the doublers. Repeat the LFEC inspection thereafter at intervals not to exceed 10,000 flight cycles.

Reporting of Results

(k) Submit a report of positive findings of the inspections required by paragraphs (g) and (j) of this AD to Boeing Commercial Airplanes, Manager, Structure/Payloads, Technical and Fleet Support, Service Engineering/Commercial Aviation Services, Long Beach Division, 3855 Lakewood Boulevard, Long Beach, California 90846, at the applicable time specified in paragraph (k)(1) or (k)(2) of this AD. The report must include the inspection results, a description of any discrepancies found, the airplane fuselage number, and the total number of landings and flight hours on the airplane. Information collection requirements

contained in this AD have been approved by the Office of Management and Budget (OMB) under the provisions of the Paperwork Reduction Act (44 U.S.C. 3501 et seq.) and have been assigned OMB Control Number 2120–0056.

(1) For any inspection accomplished after the effective date of this AD: Submit the report within 30 days after performing the inspection.

(2) For any inspection accomplished prior to the effective date of this AD: Submit the report within 30 days after the effective date of this AD.

Alternative Methods of Compliance (AMOCs)

(l)(1) The Manager, Los Angeles Aircraft Certification Office (ACO), FAA, has the authority to approve AMOCs for this AD, if requested in accordance with the procedures found in 14 CFR 39.19.

(2) To request a different method of compliance or a different compliance time for this AD, follow the procedures in 14 CFR 39.19. Before using any approved AMOC on any airplane to which the AMOC applies, notify your appropriate principal inspector (PI) in the FAA Flight Standards District Office (FSDO), or lacking a PI, your local FSDO.

(3) An AMOC that provides an acceptable level of safety may be used for any repair required by this AD, if it is approved by an Authorized Representative for the Boeing Commercial Airplanes Delegation Option Authorization Organization who has been authorized by the Manager, Los Angeles ACO, to make those findings. For a repair method to be approved, the repair must meet the certification basis of the airplane and 14 CFR 25.571, Amendment 45, and the approval must specifically refer to this AD.

(4) AMOCs approved previously in accordance with AD 2007–02–02, amendment 39–14889, are approved as AMOCs for the corresponding provisions of this AD.

Issued in Renton, Washington, on November 13, 2007.

Ali Bahrami,

Manager, Transport Airplane Directorate, Aircraft Certification Service.

[FR Doc. E7–22725 Filed 11–20–07; 8:45 am]

BILLING CODE 4910–13–P

DEPARTMENT OF TRANSPORTATION

Federal Aviation Administration

14 CFR Part 39

[Docket No. FAA–2007–0215; Directorate Identifier 2007–NM–216–AD]

RIN 2120–AA64

Airworthiness Directives; Bombardier Model CL–600–2B19 (Regional Jet Series 100 & 440) Airplanes

AGENCY: Federal Aviation Administration (FAA), Department of Transportation (DOT).

ACTION: Notice of proposed rulemaking (NPRM).

SUMMARY: The FAA proposes to supersede an existing airworthiness directive (AD) that applies to certain Bombardier Model CL–600–2B19 (Regional Jet Series 100 & 440) airplanes. The existing AD currently requires inspecting contactors 1K4XD, 2K4XD, and K4XA to determine the type of terminal base plate, and applying sealant on the terminal base plates if necessary. This proposed AD would require an inspection to determine if certain alternating current (AC) service and utility bus contactors have a terminal base plate made from non-G9 melamine material, and corrective actions if necessary; or reidentification of the mounting tray of the contactors; as applicable. This proposed AD also limits the applicability of the existing AD. This proposed AD results from incidents of short circuit failures of certain AC contactors located in the avionics bay. We are proposing this AD to prevent short circuit failures of certain AC contactors, which could result in arcing and consequent smoke or fire.

DATES: We must receive comments on this proposed AD by December 21, 2007.

ADDRESSES: You may send comments by any of the following methods:

- *Federal eRulemaking Portal:* Go to *http://www.regulations.gov*. Follow the instructions for submitting comments.
- *Fax:* 202–493–2251.
- *Mail:* U.S. Department of Transportation, Docket Operations, M–30, West Building Ground Floor, Room W12–140, 1200 New Jersey Avenue, SE., Washington, DC 20590.
- *Hand Delivery:* U.S. Department of Transportation, Docket Operations, M–30, West Building Ground Floor, Room W12–140, 1200 New Jersey Avenue, SE., Washington, DC 20590, between 9 a.m. and 5 p.m., Monday through Friday, except Federal holidays.

For service information identified in this AD, contact Bombardier, Inc., Canadair, Aerospace Group, P.O. Box 6087, Station Centre-ville, Montreal, Quebec H3C 3G9, Canada.

Examining the AD Docket

You may examine the AD docket on the Internet at *http://www.regulations.gov;* or in person at the Docket Management Facility between 9 a.m. and 5 p.m., Monday through Friday, except Federal holidays. The AD docket contains this proposed AD, the regulatory evaluation, any comments received, and other information. The street address for the Docket Office (telephone 800–647–5527) is in the **ADDRESSES** section. Comments will be available in the AD docket shortly after receipt.

FOR FURTHER INFORMATION CONTACT: Wing Chan, Aerospace Engineer, Systems and Flight Test Branch, ANE–172, FAA, New York Aircraft Certification Office, 1600 Stewart Avenue, suite 410, Westbury, New York 11590; telephone (516) 228–7311; fax (516) 794–5531.

SUPPLEMENTARY INFORMATION:

Comments Invited

We invite you to send any written relevant data, views, or arguments about this proposed AD. Send your comments to an address listed under the **ADDRESSES** section. Include ''Docket No. FAA–2007–0215; Directorate Identifier 2007–NM–216–AD'' at the beginning of your comments. We specifically invite comments on the overall regulatory, economic, environmental, and energy aspects of this proposed AD. We will consider all comments received by the closing date and may amend this proposed AD because of those comments.

We will post all comments we receive, without change, to *http://www.regulations.gov,* including any personal information you provide. We will also post a report summarizing each substantive verbal contact we receive about this proposed AD.

Discussion

On August 14, 2006, we issued AD 2006–17–14, amendment 39–14735 (71 FR 49337, August 23, 2006), for certain Bombardier Model CL–600–2B19 (Regional Jet Series 100 & 440) airplanes. That AD requires inspecting contactors 1K4XD, 2K4XD, and K4XA to determine the type of terminal base plate, and applying sealant on the terminal base plates, if necessary. That AD resulted from incidents of short circuit failures of certain alternating current (AC) contactors located in the avionics bay. We issued that AD to prevent short circuit failures of certain AC contactors, which could result in arcing and consequent smoke or fire.

Actions Since Existing AD Was Issued

The preamble to AD 2006–17–14 explains that we consider the requirements ''interim action'' and were considering further rulemaking. We now have determined that further rulemaking is indeed necessary, and this proposed AD follows from that determination.

Relevant Service Information

Bombardier has issued Service Bulletin 601R–24–123, Revision B, dated February 16, 2007. The service bulletin describes the following actions, depending on the airplane configuration:

- Doing a visual inspection to determine if AC utility bus contactors 1K4XD and 2K4XD, part number (P/N) D–18ZZA, and the AC service bus contactor K4XA, P/N D–7GRZ, have a terminal base plate made from non-G9 melamine material (Ultem 2200 material or black in color), and doing applicable corrective actions. The corrective actions include replacing damaged terminal lugs with new lugs, repairing or replacing damaged wire with new wire, and replacing a certain AC service or utility bus contactor with a new one; as applicable.
- Changing the service bulletin number on the mounting tray of the contactors.

Accomplishing the actions specified in the service information is intended to adequately address the unsafe condition. Transport Canada Civil Aviation (TCCA), which is the airworthiness authority for Canada, mandated the service information and issued Canadian airworthiness directive CF–2006–17R1, dated May 30, 2007, to ensure the continued airworthiness of these airplanes in Canada.

FAA's Determination and Requirements of the Proposed AD

These airplanes are manufactured in Canada and are type certificated for operation in the United States under the provisions of section 21.29 of the Federal Aviation Regulations (14 CFR 21.29) and the applicable bilateral airworthiness agreement. Pursuant to this bilateral airworthiness agreement, TCCA has kept the FAA informed of the situation described above. We have examined TCCA's findings, evaluated all pertinent information, and determined that AD action is necessary for airplanes of this type design that are certificated for operation in the United States.

This proposed AD would supersede AD 2006–17–14 and would continue to require inspecting contactors 1K4XD, 2K4XD, and K4XA to determine the type of terminal base plate, and applying sealant on the terminal base plates if necessary. This proposed AD also would require accomplishing the actions specified in the service bulletin described previously, which would constitute terminating action for the requirements of this proposed AD.

Change to Existing AD

AD 2006–17–14 affects Bombardier Model CL–600–2B19 (Regional Jet Series 100 & 440) airplanes, certificated in any category; serial numbers 7003 through 7990 inclusive and 8000 and subsequent. This proposed AD would limit the applicability to those airplanes having serial numbers 7003 through 7990 inclusive and 8000 through 8070 inclusive. This change parallels the applicability of the Canadian airworthiness directive CF–2006–17R1.

Costs of Compliance

The following table provides the estimated costs for U.S. operators to comply with this proposed AD.

ESTIMATED COSTS

Action	Work hours	Average labor rate per hour	Cost per airplane	Number of U.S.-registered airplanes	Fleet cost
Inspection (required by AD 2006–17–14).	3	$80	$240	739	$177,360.
New proposed actions (depending on the airplane configuration).	1 or 2	80	$80 or $160	739	Between $59,120 and $118,240.

Authority for This Rulemaking

Title 49 of the United States Code specifies the FAA's authority to issue rules on aviation safety. Subtitle I, Section 106, describes the authority of the FAA Administrator. Subtitle VII, Aviation Programs, describes in more detail the scope of the Agency's authority.

We are issuing this rulemaking under the authority described in Subtitle VII, Part A, Subpart III, Section 44701, ''General requirements.'' Under that section, Congress charges the FAA with promoting safe flight of civil aircraft in air commerce by prescribing regulations for practices, methods, and procedures the Administrator finds necessary for safety in air commerce. This regulation is within the scope of that authority because it addresses an unsafe condition that is likely to exist or develop on products identified in this rulemaking action.

Regulatory Findings

We have determined that this proposed AD would not have federalism implications under Executive Order 13132. This proposed AD would not have a substantial direct effect on the States, on the relationship between the national Government and the States, or on the distribution of power and responsibilities among the various levels of government.

For the reasons discussed above, I certify that the proposed regulation:

1. Is not a ''significant regulatory action'' under Executive Order 12866;
2. Is not a ''significant rule'' under the DOT Regulatory Policies and Procedures (44 FR 11034, February 26, 1979); and
3. Will not have a significant economic impact, positive or negative, on a substantial number of small entities under the criteria of the Regulatory Flexibility Act.

We prepared a regulatory evaluation of the estimated costs to comply with this proposed AD and placed it in the AD docket. See the **ADDRESSES** section for a location to examine the regulatory evaluation.

List of Subjects in 14 CFR Part 39

Air transportation, Aircraft, Aviation safety, Safety.

The Proposed Amendment

Accordingly, under the authority delegated to me by the Administrator, the FAA proposes to amend 14 CFR part 39 as follows:

PART 39—AIRWORTHINESS DIRECTIVES

1. The authority citation for part 39 continues to read as follows:

Authority: 49 U.S.C. 106(g), 40113, 44701.

§ 39.13 [Amended]

2. The Federal Aviation Administration (FAA) amends § 39.13 by removing amendment 39–14735 (71 FR 49337, August 23, 2006) and adding

the following new airworthiness directive (AD):

Bombardier, Inc. (Formerly Canadair): Docket No. FAA–2007–0215; Directorate Identifier 2007–NM–216–AD.

Comments Due Date

(a) The FAA must receive comments on this AD action by December 21, 2007.

Affected ADs

(b) This AD supersedes AD 2006–17–14.

Applicability

(c) This AD applies to Bombardier Model CL–600–2B19 (Regional Jet Series 100 & 440) airplanes, certificated in any category; serial numbers 7003 through 7990 inclusive, and 8000 through 8070 inclusive.

Unsafe Condition

(d) This AD results from incidents of short circuit failures of certain alternating current (AC) contactors located in the avionics bay. We are issuing this AD to prevent short circuit failures of certain AC contactors, which could result in arcing and consequent smoke or fire.

Compliance

(e) You are responsible for having the actions required by this AD performed within the compliance times specified, unless the actions have already been done.

Requirements of AD 2006–17–14

Inspection and Corrective Action

(f) Within 800 flight hours or four months after September 7, 2006 (the effective date of AD 2006–17–14), whichever occurs first: Do a general visual inspection of AC bus contactors 1K4XD and 2K4XD, part number (P/N) D–18ZZA, and the bus contactor K4XA, P/N D–7GRZ, to determine which contactors have an Ultem 2200 terminal base plate (i.e., the plate is made from a black molded thermal plastic material), and apply RTV sealant to the terminal base plate, as applicable, by doing all the actions specified in the Accomplishment Instructions of Bombardier Service Bulletin 601R–24–122, Revision A, dated July 13, 2006. Do all applicable applications of sealant before further flight.

Note 1: For the purposes of this AD, a general visual inspection is: ''A visual examination of an interior or exterior area, installation, or assembly to detect obvious damage, failure, or irregularity. This level of inspection is made from within touching distance unless otherwise specified. A mirror may be necessary to ensure visual access to all surfaces in the inspection area. This level of inspection is made under normally available lighting conditions such as daylight, hangar lighting, flashlight, or droplight and may require removal or opening of access panels or doors. Stands, ladders, or platforms may be required to gain proximity to the area being checked.''

Previous Actions Accomplished According to Other Service Information

(g) Actions accomplished before September 7, 2006, in accordance with Bombardier Drawing Number K601R50180, dated June 2, 2006; or Bombardier Service Bulletin 601R–24–122, dated June 27, 2006; are considered acceptable for compliance with the actions specified in paragraph (f) of this AD.

New Requirements of This AD

Inspection and Corrective Action

(h) Within 12 months after the effective date of this AD, do a general visual inspection, reidentification, and corrective actions, as applicable, by doing all the applicable actions specified in the Accomplishment Instructions of Bombardier Service Bulletin 601R–24–123, Revision B, dated February 16, 2007. Do the applicable corrective action before further flight. Accomplishment of these actions constitutes terminating action for the requirements of this AD.

Parts Installation

(i) As of the effective date of this AD, no person may install any AC contactor 1K4XD, 2K4XD, or K4XA, having a non-G9 melamine terminal base plate, on any airplane.

Alternative Methods of Compliance (AMOCs)

(j)(1) The Manager, New York Aircraft Certification Office, FAA, has the authority to approve AMOCs for this AD, if requested in accordance with the procedures found in 14 CFR 39.19.

(2) To request a different method of compliance or a different compliance time for this AD, follow the procedures in 14 CFR 39.19. Before using any approved AMOC on any airplane to which the AMOC applies, notify your appropriate principal inspector (PI) in the FAA Flight Standards District Office (FSDO), or lacking a PI, your local FSDO.

Related Information

(k) Canadian airworthiness directive CF–2006–17R1, dated May 30, 2007, also addresses the subject of this AD.

Issued in Renton, Washington, on November 13, 2007.

Ali Bahrami,

Manager, Transport Airplane Directorate, Aircraft Certification Service.

[FR Doc. E7–22726 Filed 11–20–07; 8:45 am]

BILLING CODE 4910–13–P

DEPARTMENT OF TRANSPORTATION

Federal Aviation Administration

14 CFR Part 39

[Docket No. FAA–2007–0213; Directorate Identifier 2007–NM–233–AD]

RIN 2120–AA64

Airworthiness Directives; Bombardier Model DHC–8–102, DHC–8–103, DHC–8–106, DHC–8–201, DHC–8–202, DHC–8–301, DHC–8–311, and DHC–8–315 Airplanes, and Model DHC–8–400 Series Airplanes

AGENCY: Federal Aviation Administration (FAA), DOT.

ACTION: Notice of proposed rulemaking (NPRM).

SUMMARY: We propose to adopt a new airworthiness directive (AD) for the products listed above. This proposed AD results from mandatory continuing airworthiness information (MCAI) originated by an aviation authority of another country to identify and correct an unsafe condition on an aviation product. The MCAI describes the unsafe condition as:

Several cases have been reported where the pilot, co-pilot or observer utility light system has failed, resulting in a burning smell within the cockpit. An investigation has revealed that, due to the orientation and location of the carbon molded potentiometers used to control the intensity of the light, the potentiometers can fail and overheat in such a way that burning of the ceiling panel and the associated insulation blanket could occur. This could lead to the presence of smoke in the cockpit, requiring that the pilots carry out the appropriate emergency procedure.

The proposed AD would require actions that are intended to address the unsafe condition described in the MCAI.

DATES: We must receive comments on this proposed AD by December 21, 2007.

ADDRESSES: You may send comments by any of the following methods:

- *Federal eRulemaking Portal:* Go to *http://www.regulations.gov.* Follow the instructions for submitting comments.
- *Fax:* (202) 493–2251.
- *Mail:* U.S. Department of Transportation, Docket Operations, M–30, West Building Ground Floor, Room W12–140, 1200 New Jersey Avenue, SE., Washington, DC 20590.
- *Hand Delivery:* U.S. Department of Transportation, Docket Operations, M–30, West Building Ground Floor, Room W12–40, 1200 New Jersey Avenue, SE., Washington, DC, between 9 a.m. and 5 p.m., Monday through Friday, except Federal holidays.

Examining the AD Docket

You may examine the AD docket on the Internet at *http://www.regulations.gov;* or in person at the Docket Operations office between 9 a.m. and 5 p.m., Monday through Friday, except Federal holidays. The AD docket contains this proposed AD, the regulatory evaluation, any comments received, and other information. The street address for the Docket Operations office (telephone (800) 647–5527) is in the **ADDRESSES** section. Comments will be available in the AD docket shortly after receipt.

FOR FURTHER INFORMATION CONTACT:

Wing Chan, Aerospace Engineer, Systems and Flight Test Branch, ANE–172, FAA, New York Aircraft Certification Office, 1600 Stewart Avenue, Suite 410, Westbury, New York 11590; telephone (516) 228–7311; fax (516) 794–5531.

SUPPLEMENTARY INFORMATION:

Comments Invited

We invite you to send any written relevant data, views, or arguments about this proposed AD. Send your comments to an address listed under the **ADDRESSES** section. Include ''Docket No. FAA–2007–0213; Directorate Identifier 2007–NM–233–AD'' at the beginning of your comments. We specifically invite comments on the overall regulatory, economic, environmental, and energy aspects of this proposed AD. We will consider all comments received by the closing date and may amend this proposed AD based on those comments.

We will post all comments we receive, without change, to *http://www.regulations.gov,* including any personal information you provide. We will also post a report summarizing each substantive verbal contact we receive about this proposed AD.

Discussion

Transport Canada Civil Aviation (TCCA), which is the aviation authority for Canada, has issued Canadian Airworthiness Directive CF–2007–11, dated August 9, 2007 (referred to after this as ''the MCAI''), to correct an unsafe condition for the specified products. The MCAI states:

> Several cases have been reported where the pilot, co-pilot or observer utility light system has failed, resulting in a burning smell within the cockpit. An investigation has revealed that, due to the orientation and location of the carbon molded potentiometers used to control the intensity of the light, the potentiometers can fail and overheat in such a way that burning of the ceiling panel and the associated insulation blanket could occur. This could lead to the presence of smoke in the cockpit, requiring that the pilots carry out the appropriate emergency procedure.

Corrective actions include replacing the affected carbon molded resistive element potentiometers with wire-wound type potentiometers, for the pilot, co-pilot, and, if applicable, observer utility lights. You may obtain further information by examining the MCAI in the AD docket.

Relevant Service Information

Bombardier has issued Service Bulletins 8–33–53, Revision A; and 84–33–10, Revision A; both dated March 14, 2007. The actions described in this service information are intended to correct the unsafe condition identified in the MCAI.

FAA's Determination and Requirements of This Proposed AD

This product has been approved by the aviation authority of another country, and is approved for operation in the United States. Pursuant to our bilateral agreement with the State of Design Authority, we have been notified of the unsafe condition described in the MCAI and service information referenced above. We are proposing this AD because we evaluated all pertinent information and determined an unsafe condition exists and is likely to exist or develop on other products of the same type design.

Differences Between This AD and the MCAI or Service Information

We have reviewed the MCAI and related service information and, in general, agree with their substance. But we might have found it necessary to use different words from those in the MCAI to ensure the AD is clear for U.S. operators and is enforceable. In making these changes, we do not intend to differ substantively from the information provided in the MCAI and related service information.

We might also have proposed different actions in this AD from those in the MCAI in order to follow FAA policies. Any such differences are highlighted in a NOTE within the proposed AD.

Costs of Compliance

Based on the service information, we estimate that this proposed AD would affect about 186 products of U.S. registry. We also estimate that it would take about 3 work-hours per product to comply with the basic requirements of this proposed AD. The average labor rate is $80 per work-hour. Required parts would cost about $0 per product. Where the service information lists required parts costs that are covered under warranty, we have assumed that there will be no charge for these costs. As we do not control warranty coverage for affected parties, some parties may incur costs higher than estimated here. Based on these figures, we estimate the cost of the proposed AD on U.S. operators to be $44,640, or $240 per product.

Authority for This Rulemaking

Title 49 of the United States Code specifies the FAA's authority to issue rules on aviation safety. Subtitle I, section 106, describes the authority of the FAA Administrator. ''Subtitle VII: Aviation Programs,'' describes in more detail the scope of the Agency's authority.

We are issuing this rulemaking under the authority described in ''Subtitle VII, Part A, Subpart III, Section 44701: General requirements.'' Under that section, Congress charges the FAA with promoting safe flight of civil aircraft in air commerce by prescribing regulations for practices, methods, and procedures the Administrator finds necessary for safety in air commerce. This regulation is within the scope of that authority because it addresses an unsafe condition that is likely to exist or develop on products identified in this rulemaking action.

Regulatory Findings

We determined that this proposed AD would not have federalism implications under Executive Order 13132. This proposed AD would not have a substantial direct effect on the States, on the relationship between the national Government and the States, or on the distribution of power and responsibilities among the various levels of government.

For the reasons discussed above, I certify this proposed regulation:

1. Is not a ''significant regulatory action'' under Executive Order 12866;

2. Is not a ''significant rule'' under the DOT Regulatory Policies and Procedures (44 FR 11034, February 26, 1979); and

3. Will not have a significant economic impact, positive or negative, on a substantial number of small entities under the criteria of the Regulatory Flexibility Act.

We prepared a regulatory evaluation of the estimated costs to comply with this proposed AD and placed it in the AD docket.

List of Subjects in 14 CFR Part 39

Air transportation, Aircraft, Aviation safety, Safety.

The Proposed Amendment

Accordingly, under the authority delegated to me by the Administrator, the FAA proposes to amend 14 CFR part 39 as follows:

PART 39—AIRWORTHINESS DIRECTIVES

1. The authority citation for part 39 continues to read as follows:

Authority: 49 U.S.C. 106(g), 40113, 44701.

§ 39.13 [Amended]

2. The FAA amends § 39.13 by adding the following new AD:

Bombardier, Inc. (Formerly de Havilland, Inc.): Docket No. FAA–2007–0213; Directorate Identifier 2007–NM–233–AD.

Comments Due Date

(a) We must receive comments by December 21, 2007.

Affected ADs

(b) None.

Applicability

(c) This AD applies to Bombardier Model DHC–8–102, DHC–8–103, DHC–8–106, DHC–8–201, DHC–8–202, DHC–8–301, DHC–8–311, and DHC–8–315 airplanes, serial numbers 003 through 639; and Model DHC–8–400 series airplanes, serial numbers 4003, 4004, 4006, and 4008 through 4149; certificated in any category.

Subject

(d) Air Transport Association (ATA) of America Code 33: Lights.

Reason

(e) The mandatory continuing airworthiness information (MCAI) states:

Several cases have been reported where the pilot, co-pilot or observer utility light system has failed, resulting in a burning smell within the cockpit. An investigation has revealed that, due to the orientation and location of the carbon molded potentiometers used to control the intensity of the light, the potentiometers can fail and overheat in such a way that burning of the ceiling panel and the associated insulation blanket could occur. This could lead to the presence of smoke in the cockpit, requiring that the pilots carry out the appropriate emergency procedure.

Corrective actions include replacing the affected carbon molded resistive element potentiometers with wire-wound type potentiometers, for the pilot, co-pilot, and, if applicable, observer utility lights.

Actions and Compliance

(f) Within 18 months after the effective date of this AD, unless already done, do the following actions.

(1) For Model DHC–8–102, DHC–8–103, DHC–8–106, DHC–8–201, DHC–8–202, DHC–8–301, DHC–8–311, and DHC–8–315 airplanes: Install Bombardier Modsum 8Q101603 to replace the affected carbon molded resistive element potentiometers with wire-wound type potentiometers, for both the pilot and co-pilot utility lights, in accordance with the Accomplishment Instructions of Bombardier Service Bulletin 8–33–53, Revision A, dated March 14, 2007.

(2) For Model DHC–8–400 series airplanes: Install Bombardier Modsum 4–126381 to replace the affected carbon molded resistive element potentiometers with wire-wound type potentiometers, for the pilot, co-pilot, and observer utility lights, in accordance with the Accomplishment Instructions of Bombardier Service Bulletin 84–33–10, Revision A, dated March 14, 2007.

(3) Actions done before the effective date of this AD in accordance with Bombardier Service Bulletin 8–33–53 or 84–33–10, both dated December 1, 2006, as applicable, are considered acceptable for compliance with the corresponding actions specified in this AD.

FAA AD Differences

Note: This AD differs from the MCAI and/or service information as follows: No difference.

Other FAA AD Provisions

(g) The following provisions also apply to this AD:

(1) *Alternative Methods of Compliance (AMOCs):* The Manager, New York Aircraft Certification Office (ACO), FAA, has the authority to approve AMOCs for this AD, if requested using the procedures found in 14 CFR 39.19. Send information to ATTN: Wing Chan, Aerospace Engineer, Systems and Flight Test Branch, ANE–172, FAA, New York Aircraft Certification Office, 1600 Stewart Avenue, Suite 410, Westbury, New York 11590; telephone (516) 228–7311; fax (516) 794–5531. Before using any approved AMOC on any airplane to which the AMOC applies, notify your appropriate principal inspector (PI) in the FAA Flight Standards District Office (FSDO), or lacking a PI, your local FSDO.

(2) *Airworthy Product:* For any requirement in this AD to obtain corrective actions from a manufacturer or other source, use these actions if they are FAA-approved. Corrective actions are considered FAA-approved if they are approved by the State of Design Authority (or their delegated agent). You are required to assure the product is airworthy before it is returned to service.

(3) *Reporting Requirements:* For any reporting requirement in this AD, under the provisions of the Paperwork Reduction Act, the Office of Management and Budget (OMB) has approved the information collection requirements and has assigned OMB Control Number 2120–0056.

Related Information

(h) Refer to MCAI Canadian Airworthiness Directive CF–2007–11, dated August 9, 2007; Bombardier Service Bulletin 8–33–53, Revision A, dated March 14, 2007; and Bombardier Service Bulletin 84–33–10, Revision A, dated March 14, 2007; for related information.

Issued in Renton, Washington, on November 13, 2007.

Ali Bahrami,

Manager, Transport Airplane Directorate, Aircraft Certification Service.

[FR Doc. E7–22728 Filed 11–20–07; 8:45 am]

BILLING CODE 4910–13–P

DEPARTMENT OF TRANSPORTATION

Federal Aviation Administration

14 CFR Part 39

[Docket No. FAA–2007–0214; Directorate Identifier 2007–NM–224–AD]

RIN 2120–AA64

Airworthiness Directives; McDonnell Douglas Model 717–200 Airplanes

AGENCY: Federal Aviation Administration (FAA), Department of Transportation (DOT).

ACTION: Notice of proposed rulemaking (NPRM).

SUMMARY: The FAA proposes to adopt a new airworthiness directive (AD) for certain McDonnell Douglas Model 717–200 airplanes. This proposed AD would require installing an additional support bracket for the gray water drain hose, replacing the screw of the support bracket with a new screw for the potable water supply hose, installing a spacer, doing a detailed inspection to detect interference or wear damage on hoses, lines and/or cables, and doing corrective actions if necessary. This proposed AD results from reports of interference between the potable water supply hose and/or gray water drain hose at the aft lavatories with the fuel line and/or power feeder cables of the auxiliary power unit (APU) located below the aft cabin floor. We are proposing this AD to prevent interference and chafing between the potable water supply hose and/or gray water hose with the fuel line and/or power feeder cables of the APU, which may cause arcing and sparking, and/or fuel leaking, and consequent fire or explosion.

DATES: We must receive comments on this proposed AD by January 7, 2008.

ADDRESSES: You may send comments by any of the following methods:

- *Federal eRulemaking Portal:* Go to *http://www.regulations.gov.* Follow the instructions for submitting comments.
- *Fax:* 202–493–2251.
- *Mail:* U.S. Department of Transportation, Docket Operations, M–30, West Building Ground Floor, Room W12–140, 1200 New Jersey Avenue, SE., Washington, DC 20590.
- *Hand Delivery:* U.S. Department of Transportation, Docket Operations, M–

30, West Building Ground Floor, Room W12–140, 1200 New Jersey Avenue, SE., Washington, DC 20590, between 9 a.m. and 5 p.m., Monday through Friday, except Federal holidays.

For service information identified in this AD, contact Boeing Commercial Airplanes, Long Beach Division, 3855 Lakewood Boulevard, Long Beach, California 90846, Attention: Data and Service Management, Dept. C1–L5A (D800–0024).

Examining the AD Docket

You may examine the AD docket on the Internet at *http://www.regulations.gov;* or in person at the Docket Management Facility between 9 a.m. and 5 p.m., Monday through Friday, except Federal holidays. The AD docket contains this proposed AD, the regulatory evaluation, any comments received, and other information. The street address for the Docket Office (telephone 800–647–5527) is in the **ADDRESSES** section. Comments will be available in the AD docket shortly after receipt.

FOR FURTHER INFORMATION CONTACT: Ken Sujishi, Aerospace Engineer, Cabin Safety/Mechanical and Environmental Systems Branch, ANM–150L, FAA, Los Angeles Aircraft Certification Office, 3960 Paramount Boulevard, Lakewood, California 90712–4137; telephone (562) 627–5353; fax (562) 627–5210.

SUPPLEMENTARY INFORMATION:

Comments Invited

We invite you to send any written relevant data, views, or arguments about this proposed AD. Send your comments to an address listed under the **ADDRESSES** section. Include ''Docket No. FAA–2007–0214; Directorate Identifier 2007–NM–224–AD'' at the beginning of your comments. We specifically invite comments on the overall regulatory, economic, environmental, and energy aspects of this proposed AD. We will consider all comments received by the closing date and may amend this proposed AD because of those comments.

We will post all comments we receive, without change, to *http://www.regulations.gov,* including any personal information you provide. We will also post a report summarizing each substantive verbal contact we receive about this proposed AD.

Discussion

We have received reports of interference between the potable water supply hose and/or gray water drain hose at the aft lavatories with the fuel line and/or power feeder cables of the auxiliary power unit (APU) located below the aft cabin floor, on McDonnell Douglas Model 717–200 airplanes. A production quality line check determined that, due to a manufacturing process error, airplanes were delivered with a potable water drain hose that does not conform to design specifications. As a result, the potable water supply hose and/or gray water hose causes chafing with the fuel line and/or power feeder cables of the APU. These conditions, if not corrected, may cause arcing and sparking, and/or fuel leaking, and consequent fire or explosion.

Relevant Service Information

We have reviewed Boeing Alert Service Bulletin 717–38A0004, Revision 1, dated August 15, 2007. The service bulletin describes the following procedures:

- Installing an additional support bracket for the gray water drain hose.
- Replacing the screw of the support bracket of the potable water supply hose with a new screw and installing a spacer.
- Doing detailed inspections to detect interference or wear damage of the potable water supply hose, gray water drain hose, and fuel lines and power feeder cables of the auxiliary power unit.
- Doing applicable corrective actions. The corrective actions include repairing power feeder cables and fuel lines of the APU, and contacting Boeing for repair, as applicable.

Accomplishing the actions specified in the service information is intended to adequately address the unsafe condition.

FAA's Determination and Requirements of the Proposed AD

We have evaluated all pertinent information and identified an unsafe condition that is likely to exist or develop on other airplanes of this same type design. For this reason, we are proposing this AD, which would require accomplishing the actions specified in the service information described previously, except as discussed under ''Difference Between the Proposed AD and Service Bulletin.''

Difference Between the Proposed AD and Service Bulletin

Although the service bulletin specifies that operators may contact the manufacturer for disposition of certain repair conditions, this proposed AD would require operators to repair those conditions using a method approved by the FAA.

Costs of Compliance

There are about 123 airplanes of the affected design in the worldwide fleet. This proposed AD would affect about 95 airplanes of U.S. registry. The proposed actions would take about 70 work hours per airplane, at an average labor rate of $80 per work hour. The manufacturer states that it will supply required parts to the operators at no cost. Based on these figures, the estimated cost of the proposed AD for U.S. operators is $532,000, or $5,600 per airplane.

Authority for This Rulemaking

Title 49 of the United States Code specifies the FAA's authority to issue rules on aviation safety. Subtitle I, Section 106, describes the authority of the FAA Administrator. Subtitle VII, Aviation Programs, describes in more detail the scope of the Agency's authority.

We are issuing this rulemaking under the authority described in Subtitle VII, Part A, Subpart III, Section 44701, ''General requirements.'' Under that section, Congress charges the FAA with promoting safe flight of civil aircraft in air commerce by prescribing regulations for practices, methods, and procedures the Administrator finds necessary for safety in air commerce. This regulation is within the scope of that authority because it addresses an unsafe condition that is likely to exist or develop on products identified in this rulemaking action.

Regulatory Findings

We have determined that this proposed AD would not have federalism implications under Executive Order 13132. This proposed AD would not have a substantial direct effect on the States, on the relationship between the national Government and the States, or on the distribution of power and responsibilities among the various levels of government.

For the reasons discussed above, I certify that the proposed regulation:

1. Is not a ''significant regulatory action'' under Executive Order 12866;

2. Is not a ''significant rule'' under the DOT Regulatory Policies and Procedures (44 FR 11034, February 26, 1979); and

3. Will not have a significant economic impact, positive or negative, on a substantial number of small entities under the criteria of the Regulatory Flexibility Act.

We prepared a regulatory evaluation of the estimated costs to comply with this proposed AD and placed it in the AD docket. See the **ADDRESSES** section for a location to examine the regulatory evaluation.

List of Subjects in 14 CFR Part 39

Air transportation, Aircraft, Aviation safety, Safety.

The Proposed Amendment

Accordingly, under the authority delegated to me by the Administrator, the FAA proposes to amend 14 CFR part 39 as follows:

PART 39—AIRWORTHINESS DIRECTIVES

1. The authority citation for part 39 continues to read as follows:

Authority: 49 U.S.C. 106(g), 40113, 44701.

§ 39.13 [Amended]

2. The Federal Aviation Administration (FAA) amends § 39.13 by adding the following new airworthiness directive (AD):

Boeing: Docket No. FAA–2007–0214; Directorate Identifier 2007–NM–224–AD.

Comments Due Date

(a) The FAA must receive comments on this AD action by January 7, 2008.

Affected ADs

(b) None.

Applicability

(c) This AD applies to McDonnell Douglas Model 717–200 airplanes, certificated in any category; as identified in Boeing Alert Service Bulletin 717–38A0004, Revision 1, dated August 15, 2007.

Unsafe Condition

(d) This AD results from reports of interference between the potable water supply hose and/or gray water drain hose at the aft lavatories with the fuel line and/or power feeder cables of the auxiliary power unit (APU) located below the aft cabin floor. We are issuing this AD to prevent interference and chafing between the potable water supply hose and/or gray water hose with the fuel line and/or power feeder cables of the APU, which may cause arcing and sparking, and/or fuel leaking, and consequent fire or explosion.

Compliance

(e) You are responsible for having the actions required by this AD performed within the compliance times specified, unless the actions have already been done.

Installations, Replacements, Inspections, and Corrective Actions

(f) Within 27 months after the effective date of this AD, do the installations, replacement, inspections, and applicable corrective actions by accomplishing all the actions specified in the Accomplishment Instructions of Boeing Alert Service Bulletin 717–38A0004, Revision 1, dated August 15, 2007; except as provided by paragraph (g) of this AD. The applicable corrective actions must be done before further flight.

(g) If any discrepancy is found during any inspection required by this AD, and Boeing Alert Service Bulletin 717–38A0004, Revision 1, dated August 15, 2007, specifies to contact Boeing for appropriate

Before further flight, repair the discrepancy in accordance with a method approved by the Manager, Los Angeles Aircraft Certification Office (ACO), FAA. For a repair method to be approved, the repair must meet the certification basis of the airplane, and the approval must specifically refer to this AD.

Credit for Actions Done Using the Previous Service Information

(h) Actions accomplished before the effective date of this AD in accordance with Boeing Service Bulletin 717–38A0004, dated December 6, 2006, is considered acceptable for compliance with the corresponding actions specified in paragraph (f) of this AD.

Alternative Methods of Compliance (AMOCs)

(i)(1) The Manager, Los Angeles ACO, FAA, has the authority to approve AMOCs for this AD, if requested in accordance with the procedures found in 14 CFR 39.19.

(2) To request a different method of compliance or a different compliance time for this AD, follow the procedures in 14 CFR 39.19. Before using any approved AMOC on any airplane to which the AMOC applies, notify your appropriate principal inspector (PI) in the FAA Flight Standards District Office (FSDO), or lacking a PI, your local FSDO.

Issued in Renton, Washington, on November 13, 2007.

Ali Bahrami,

Manager, Transport Airplane Directorate, Aircraft Certification Service.

[FR Doc. E7–22727 Filed 11–20–07; 8:45 am]

BILLING CODE 4910–13–P

DEPARTMENT OF TRANSPORTATION

Federal Aviation Administration

14 CFR Part 39

[Docket No. FAA–2007–0212; Directorate Identifier 2007–NM–237–AD]

RIN 2120–AA64

Airworthiness Directives; SAAB Model SF340A and Model 340B Airplanes

AGENCY: Federal Aviation Administration (FAA), DOT.

ACTION: Notice of proposed rulemaking (NPRM).

SUMMARY: We propose to adopt a new airworthiness directive (AD) for the products listed above. This proposed AD results from mandatory continuing airworthiness information (MCAI) originated by an aviation authority of another country to identify and correct an unsafe condition on an aviation product. The MCAI describes the unsafe condition as:

Subsequent to accidents involving Fuel Tank System explosions in flight * * * and on ground, the FAA has published Special Federal Aviation Regulation 88 (SFAR88) in June 2001.

In their Letters referenced 04/00/02/07/01–L296 dated March 4, 2002 and 04/00/02/07/03–L024, dated February 3, 2003, the JAA (Joint Aviation Authorities) recommended the application of a similar regulation to the National Aviation Authorities (NAA).

Under this regulation, all holders of type certificates for passenger transport aircraft with either a passenger capacity of 30 or more, or a payload capacity of 7,500 pounds (3402 kg) or more, which have received their certification since January 1, 1958, are required to conduct a design review against explosion risks.

The unsafe condition is the potential of ignition sources inside fuel tanks, which, in combination with flammable fuel vapors, could result in fuel tank explosions and consequent loss of the airplane. The proposed AD would require actions that are intended to address the unsafe condition described in the MCAI.

DATES: We must receive comments on this proposed AD by December 21, 2007.

ADDRESSES: You may send comments by any of the following methods:

- *Federal eRulemaking Portal:* Go to *http://www.regulations.gov.* Follow the instructions for submitting comments.
- *Fax:* (202) 493–2251.
- *Mail:* U.S. Department of Transportation, Docket Operations, M–30, West Building Ground Floor, Room W12–140, 1200 New Jersey Avenue, SE., Washington, DC 20590.
- *Hand Delivery:* U.S. Department of Transportation, Docket Operations, M–30, West Building Ground Floor, Room W12–40, 1200 New Jersey Avenue, SE., Washington, DC, between 9 a.m. and 5 p.m., Monday through Friday, except Federal holidays.

Examining the AD Docket

You may examine the AD docket on the Internet at *http://www.regulations.gov;* or in person at the Docket Operations office between 9 a.m. and 5 p.m., Monday through Friday, except Federal holidays. The AD docket contains this proposed AD, the regulatory evaluation, any comments received, and other information. The street address for the Docket Operations office (telephone (800) 647–5527) is in the **ADDRESSES** section. Comments will be available in the AD docket shortly after receipt.

FOR FURTHER INFORMATION CONTACT: Shahram Daneshmandi, Aerospace Engineer, International Branch, ANM–116, Transport Airplane Directorate,

FAA, 1601 Lind Avenue SW., Renton, Washington 98057–3356; telephone (425) 227–1112; fax (425) 227–1149.

SUPPLEMENTARY INFORMATION:

Comments Invited

We invite you to send any written relevant data, views, or arguments about this proposed AD. Send your comments to an address listed under the **ADDRESSES** section. Include ''Docket No. FAA–2007–0212; Directorate Identifier 2007–NM–237–AD'' at the beginning of your comments. We specifically invite comments on the overall regulatory, economic, environmental, and energy aspects of this proposed AD. We will consider all comments received by the closing date and may amend this proposed AD based on those comments.

We will post all comments we receive, without change, to *http://www.regulations.gov,* including any personal information you provide. We will also post a report summarizing each substantive verbal contact we receive about this proposed AD.

Discussion

The European Aviation Safety Agency (EASA), which is the Technical Agent for the Member States of the European Community, has issued EASA Airworthiness Directive 2007–0169, dated June 15, 2007 (referred to after this as ''the MCAI''), to correct an unsafe condition for the specified products. The MCAI states:

> Subsequent to accidents involving Fuel Tank System explosions in flight * * * and on ground, the FAA has published Special Federal Aviation Regulation 88 (SFAR88) in June 2001.
>
> In their Letters referenced 04/00/02/07/01–L296 dated March 4, 2002 and 04/00/02/07/03–L024, dated February 3, 2003, the JAA (Joint Aviation Authorities) recommended the application of a similar regulation to the National Aviation Authorities (NAA).
>
> Under this regulation, all holders of type certificates for passenger transport aircraft with either a passenger capacity of 30 or more, or a payload capacity of 7,500 pounds (3402 kg) or more, which have received their certification since January 1, 1958, are required to conduct a design review against explosion risks.
>
> This Airworthiness Directive, which renders mandatory the modification [3163] to separate wiring of Fuel Quantity Indication System [FQIS], is a consequence of the design review.

Modification 3163 includes re-routing of existing wiring to the FQIS, installing new wires with shields to the FQIS, and operational and functional tests of the FQIS. You may obtain further information by examining the MCAI in the AD docket.

The FAA has examined the underlying safety issues involved in fuel tank explosions on several large transport airplanes, including the adequacy of existing regulations, the service history of airplanes subject to those regulations, and existing maintenance practices for fuel tank systems. As a result of those findings, we issued a regulation titled ''Transport Airplane Fuel Tank System Design Review, Flammability Reduction and Maintenance and Inspection Requirements'' (66 FR 23086, May 7, 2001). In addition to new airworthiness standards for transport airplanes and new maintenance requirements, this rule included Special Federal Aviation Regulation No. 88 (''SFAR 88,'' Amendment 21–78, and subsequent Amendments 21–82 and 21–83).

Among other actions, SFAR 88 requires certain type design (*i.e.*, type certificate (TC) and supplemental type certificate (STC)) holders to substantiate that their fuel tank systems can prevent ignition sources in the fuel tanks. This requirement applies to type design holders for large turbine-powered transport airplanes and for subsequent modifications to those airplanes. It requires them to perform design reviews and to develop design changes and maintenance procedures if their designs do not meet the new fuel tank safety standards. As explained in the preamble to the rule, we intended to adopt airworthiness directives to mandate any changes found necessary to address unsafe conditions identified as a result of these reviews.

In evaluating these design reviews, we have established four criteria intended to define the unsafe conditions associated with fuel tank systems that require corrective actions. The percentage of operating time during which fuel tanks are exposed to flammable conditions is one of these criteria. The other three criteria address the failure types under evaluation: Single failures, single failures in combination with a latent condition(s), and in-service failure experience. For all four criteria, the evaluations included consideration of previous actions taken that may mitigate the need for further action.

The Joint Aviation Authorities (JAA) has issued a regulation that is similar to SFAR 88. (The JAA is an associated body of the European Civil Aviation Conference (ECAC) representing the civil aviation regulatory authorities of a number of European States who have agreed to co-operate in developing and implementing common safety regulatory standards and procedures.) Under this regulation, the JAA stated that all members of the ECAC that hold type certificates for transport category airplanes are required to conduct a design review against explosion risks.

We have determined that the actions identified in this AD are necessary to reduce the potential of ignition sources inside fuel tanks, which, in combination with flammable fuel vapors, could result in fuel tank explosions and consequent loss of the airplane.

Relevant Service Information

Saab has issued Service Bulletin 340–28–025, dated February 26, 2007. The actions described in this service information are intended to correct the unsafe condition identified in the MCAI.

FAA's Determination and Requirements of This Proposed AD

This product has been approved by the aviation authority of another country, and is approved for operation in the United States. Pursuant to our bilateral agreement with the State of Design Authority, we have been notified of the unsafe condition described in the MCAI and service information referenced above. We are proposing this AD because we evaluated all pertinent information and determined an unsafe condition exists and is likely to exist or develop on other products of the same type design.

Differences Between This AD and the MCAI or Service Information

We have reviewed the MCAI and related service information and, in general, agree with their substance. But we might have found it necessary to use different words from those in the MCAI to ensure the AD is clear for U.S. operators and is enforceable. In making these changes, we do not intend to differ substantively from the information provided in the MCAI and related service information.

We might also have proposed different actions in this AD from those in the MCAI in order to follow FAA policies. Any such differences are highlighted in a NOTE within the proposed AD.

Costs of Compliance

Based on the service information, we estimate that this proposed AD would affect about 218 products of U.S. registry. We also estimate that it would take about 50 work-hours per product to comply with the basic requirements of this proposed AD. The average labor rate is $80 per work-hour. Required parts would cost about $1,500 per product. Where the service information lists required parts costs that are covered under warranty, we have assumed that there will be no charge for

these costs. As we do not control warranty coverage for affected parties, some parties may incur costs higher than estimated here. Based on these figures, we estimate the cost of the proposed AD on U.S. operators to be $1,199,000, or $5,500 per product.

Authority for This Rulemaking

Title 49 of the United States Code specifies the FAA's authority to issue rules on aviation safety. Subtitle I, section 106, describes the authority of the FAA Administrator. ''Subtitle VII: Aviation Programs,'' describes in more detail the scope of the Agency's authority.

We are issuing this rulemaking under the authority described in ''Subtitle VII, Part A, Subpart III, Section 44701: General requirements.'' Under that section, Congress charges the FAA with promoting safe flight of civil aircraft in air commerce by prescribing regulations for practices, methods, and procedures the Administrator finds necessary for safety in air commerce. This regulation is within the scope of that authority because it addresses an unsafe condition that is likely to exist or develop on products identified in this rulemaking action.

Regulatory Findings

We determined that this proposed AD would not have federalism implications under Executive Order 13132. This proposed AD would not have a substantial direct effect on the States, on the relationship between the national Government and the States, or on the distribution of power and responsibilities among the various levels of government.

For the reasons discussed above, I certify this proposed regulation:

1. Is not a ''significant regulatory action'' under Executive Order 12866;

2. Is not a ''significant rule'' under the DOT Regulatory Policies and Procedures (44 FR 11034, February 26, 1979); and

3. Will not have a significant economic impact, positive or negative, on a substantial number of small entities under the criteria of the Regulatory Flexibility Act.

We prepared a regulatory evaluation of the estimated costs to comply with this proposed AD and placed it in the AD docket.

List of Subjects in 14 CFR Part 39

Air transportation, Aircraft, Aviation safety, Safety.

The Proposed Amendment

Accordingly, under the authority delegated to me by the Administrator, the FAA proposes to amend 14 CFR part 39 as follows:

PART 39—AIRWORTHINESS DIRECTIVES

1. The authority citation for part 39 continues to read as follows:

Authority: 49 U.S.C. 106(g), 40113, 44701.

§ 39.13 [Amended]

2. The FAA amends § 39.13 by adding the following new AD:

SAAB Aircraft AB: Docket No. FAA–2007–0212; Directorate Identifier 2007–NM–237–AD.

Comments Due Date

(a) We must receive comments by December 21, 2007.

Affected ADs

(b) None.

Applicability

(c) This AD applies to SAAB Model SF340A and Model 340B airplanes, all serial numbers, certificated in any category.

Subject

(d) Air Transport Association (ATA) of America Code 28: Fuel.

Reason

(e) The mandatory continuing airworthiness information (MCAI) states:

Subsequent to accidents involving Fuel Tank System explosions in flight * * * and on ground, the FAA has published Special Federal Aviation Regulation 88 (SFAR88) in June 2001.

In their Letters referenced 04/00/02/07/01–L296 dated March 4, 2002 and 04/00/02/07/03–L024, dated February 3, 2003, the JAA (Joint Aviation Authorities) recommended the application of a similar regulation to the National Aviation Authorities (NAA).

Under this regulation, all holders of type certificates for passenger transport aircraft with either a passenger capacity of 30 or more, or a payload capacity of 7,500 pounds (3402 kg) or more, which have received their certification since January 1, 1958, are required to conduct a design review against explosion risks.

This Airworthiness Directive, which renders mandatory the modification [3163] to separate wiring of Fuel Quantity Indication System [FQIS], is a consequence of the design review.

The unsafe condition is the potential of ignition sources inside fuel tanks, which, in combination with flammable fuel vapors, could result in fuel tank explosions and consequent loss of the airplane. Modification 3163 includes re-routing of existing wiring to the FQIS, installing new wires with shields to the FQIS, and operational and functional test of the FQIS.

Actions and Compliance

(f) Within 72 months after the effective date of this AD, unless already done, do modification 3163 in accordance with the Accomplishment Instructions of Saab Service Bulletin 340–28–025, dated February 26, 2007.

FAA AD Differences

Note 1: This AD differs from the MCAI and/or service information as follows: No differences.

Other FAA AD Provisions

(g) The following provisions also apply to this AD:

(1) *Alternative Methods of Compliance (AMOCs):* The Manager, International Branch, ANM–116, FAA, has the authority to approve AMOCs for this AD, if requested using the procedures found in 14 CFR 39.19. Send information to ATTN: Shahram Daneshmandi, Aerospace Engineer, International Branch, ANM–116, Transport Airplane Directorate, FAA, 1601 Lind Avenue, SW., Renton, Washington 98057–3356; telephone (425) 227–1112; fax (425) 227–1149. Before using any approved AMOC on any airplane to which the AMOC applies, notify your appropriate principal inspector (PI) in the FAA Flight Standards District Office (FSDO), or lacking a PI, your local FSDO.

(2) *Airworthy Product:* For any requirement in this AD to obtain corrective actions from a manufacturer or other source, use these actions if they are FAA-approved. Corrective actions are considered FAA-approved if they are approved by the State of Design Authority (or their delegated agent). You are required to assure the product is airworthy before it is returned to service.

(3) *Reporting Requirements:* For any reporting requirement in this AD, under the provisions of the Paperwork Reduction Act, the Office of Management and Budget (OMB) has approved the information collection requirements and has assigned OMB Control Number 2120–0056.

Related Information

(h) Refer to MCAI EASA Airworthiness Directive 2007–0169, dated June 15, 2007, and Saab Service Bulletin 340–28–025, dated February 26, 2007, for related information.

Issued in Renton, Washington, on November 13, 2007.

Ali Bahrami,

Manager, Transport Airplane Directorate, Aircraft Certification Service.

[FR Doc. E7–22729 Filed 11–20–07; 8:45 am]

BILLING CODE 4910–13–P

DEPARTMENT OF COMMERCE

National Oceanic and Atmospheric Administration

15 CFR Part 922

Notice of Intent To Prepare a Supplemental Draft Environmental Impact Statement for a Proposed Rule Limiting Discharges From Vessels in Cordell Bank, Gulf of the Farallones, and Monterey Bay National Marine Sanctuaries

AGENCY: National Marine Sanctuary Program, National Ocean Service, National Oceanic and Atmospheric Administration, Department of Commerce.

ACTION: Notice of Intent.

SUMMARY: Notice is hereby given that the National Oceanic and Atmospheric Administration's (NOAA) National Marine Sanctuary Program (NMSP) is preparing a Supplemental Draft Environmental Impact Statement (SDEIS) to supplement and/or replace information contained in the Draft Environmental Impact Statement (DEIS) for the Joint Management Plan Review, the management plan review for the Cordell Bank, Gulf of the Farallones, and Monterey Bay National Marine Sanctuaries. The SDEIS will analyze revisions to the proposed action that would in effect prohibit the following discharges within the sanctuaries: All sewage from vessels 300 gross registered tons (GRT) or more with the capacity to hold sewage while within the sanctuary; and, in the Monterey Bay National Marine Sanctuary, all graywater from vessels 300 GRT or more with the capacity to hold graywater while within the sanctuary.

DATES: Because the NMSP has previously requested (64 FR 31528 and 71 FR 29096) and received extensive information from the public on issues to be addressed in the SDEIS, and because the Council on Environmental Quality (CEQ) regulations for implementing the National Environmental Policy Act (NEPA) do not require additional scoping for this SDEIS process (40 CFR 1502.9(c)(4)), the NMSP is not asking for further public scoping information and comment at this time. Upon release of the SDEIS the NMSP will provide a 45-day public review/comment period.

ADDRESSES: Copies of the 2006 DEIS are available at NOAA offices located at 1 Bear Valley Rd., Point Reyes Station, CA; West Crissy Field on the Presidio, 991 Marine Drive, San Francisco, CA, 299 Foam Street, Monterey, California, and on the Web at *http://sanctuaries.noaa.gov/jointplan/*.

FOR FURTHER INFORMATION CONTACT: Sean Morton at (301) 713–7264 or *sean.morton@noaa.gov.*

SUPPLEMENTARY INFORMATION: The National Oceanic and Atmospheric Administration (NOAA) has proposed draft revised management plans, revised designation documents, and revised regulations for the Cordell Bank National Marine Sanctuary (CBNMS), Gulf of the Farallones National Marine Sanctuary (GFNMS), and Monterey Bay National Marine Sanctuary (MBNMS). The proposed regulations would revise and provide greater clarity to existing regulations. In particular, NOAA proposed changes to prohibitions regarding ''discharge and deposit'' in the MBNMS, and prohibiting discharging or depositing most matter from cruise ships.

On May 11, 2007 NOAA received a request from the California State Water Resources Control Board to prohibit discharges from certain vessels in national marine sanctuaries offshore California. In addition, on August 10, 2007, the California Coastal Commission voted to concur with the consistency finding the JMPR actions are consistent with the policies of the California Coastal Management Program, on the condition that NOAA revise the proposed discharge and deposit regulation to prohibit vessels of 300 gross registered tons (GRT) or more from discharging sewage or graywater into the waters of the sanctuaries. After reviewing public comments on the proposed regulations, considering the California Coastal Commission's federal consistency review (per the Coastal Zone Management Act; 16 U.S.C. 1451 *et seq.*), and further analyzing vessel discharge issues, NOAA decided to revise the CBNMS, GFNMS, and MBNMS proposed discharge regulations to prohibit discharges of all sewage from vessels 300 gross registered tons (GRT) or more with the capacity to hold sewage while within the sanctuary; and in the MBNMS limit the exception for graywater discharges to vessels less than 300 GRT and vessels 300 GRT or more without the capacity to hold graywater while within the MBNMS. The revised proposed regulations will include prohibitions satisfying the request from the State of California for the CBNMS, GFNMS, and MBNMS.

The SDEIS, in conjunction with the concomitant supplemental proposed rule, will evaluate the revised proposed action and provide the public with an opportunity for additional review and comment.

Authority: 16 U.S.C. 1431 *et seq.*

Federal Domestic Assistance Catalog Number 11.429 Marine Sanctuary Program.

Dated: November 15, 2007.

Elizabeth R. Scheffler,

Associate Assistant Administrator for Management, Ocean Services and Coastal Zone Management.

[FR Doc. E7–22710 Filed 11–20–07; 8:45 am]

BILLING CODE 3510–NK–P

COMMODITY FUTURES TRADING COMMISSION

17 CFR Part 150

RIN 3038–AC140

Revision of Federal Speculative Position Limits

AGENCY: Commodity Futures Trading Commission.

ACTION: Notice of proposed rulemaking.

SUMMARY: The Commodity Futures Trading Commission (''Commission'') periodically reviews the speculative position limits for certain agricultural commodities set out in Commission regulation 150.2 (''Federal speculative position limits''). In this regard, the Commission has reviewed the existing levels for Federal speculative position limits and is now proposing to increase these limits for all single-month and all-months-combined positions in all commodities except oats, based on the formula set out in Commission Regulation 150.5(c). In addition, the Commission is also proposing to aggregate traders' positions for purposes of ascertaining compliance with Federal speculative position limits when a designated contract market (''DCM'') lists for trading a futures contract that shares substantially identical terms with a Regulation 150.2-enumerated contract listed on another DCM, including a futures contract that is cash-settled based on the settlement prices for a futures contract that is already enumerated. The Commission is requesting comment on these rule amendments.

DATES: Comments must be received on or before December 21, 2007.

ADDRESSES: Comments should be submitted to David Stawick, Secretary, Commodity Futures Trading Commission, Three Lafayette Centre, 1155 21st Street, NW., Washington, DC 20581. Comments also may be sent by facsimile to (202) 418–5521, or by electronic mail to *secretary@cftc.gov.* Reference should be made to ''Proposed Revision of Federal Speculative Position Limits.'' Comments may also be

submitted by connecting to the Federal eRulemaking Portal at *http://www.regulations.gov* and following comment submission instructions.

FOR FURTHER INFORMATION CONTACT: Don Heitman, Attorney, Division of Market Oversight, Commodity Futures Trading Commission, Three Lafayette Centre, 1155 21st Street, NW., Washington, DC 20581, telephone (202) 418–5041, facsimile number (202) 418–5507, electronic mail *dheitman@cftc.gov;* or Martin Murray, Economist, Division of Market Oversight, telephone (202) 418–5276, facsimile number (202) 418–5507, electronic mail *mmurray@cftc.gov.*

SUPPLEMENTARY INFORMATION:

I. Background

A. Introduction

The Commission has long established and enforced speculative position limits for futures contracts on various agricultural commodities. The Commission periodically reviews these Federal speculative position limits, which are set out in Commission regulation 150.2.[1] In this regard, the Commission has reviewed the existing levels for Federal speculative position limits and is now proposing to increase these limits for all single-month and all-months-combined positions in all commodity markets enumerated in Commission regulation 150.2, except Chicago Board of Trade (''CBT'') Oats, based on the formula set out in Commission Regulation 150.5(c). In particular, the Commission is proposing to increase levels for single-month and all-months-combined positions for CBT Corn, Soybeans, Wheat, Soybean Oil, and Soybean Meal; Minneapolis Grain Exchange (MGE) Hard Red Spring Wheat; Kansas City Board of Trade (KCBT) Hard Winter Wheat, and New York Board of Trade (NYBOT) Cotton No. 2. The spot month limits for all of these commodities would remain unchanged. In addition, the Commission is also proposing to aggregate traders' positions for purposes of ascertaining compliance with Federal speculative position limits when a DCM lists for trading a futures contract that shares substantially identical terms with a Regulation 150.2-enumerated contract listed on another DCM, including a futures contract that is cash-settled based on the settlement prices for a futures contract that is already enumerated.

B. Regulatory Framework

Speculative position limits have been a tool for the regulation of the U.S. futures markets since the adoption of the Commodity Exchange Act of 1936. Section 4a(a) of the Commodity Exchange Act (Act), 7 U.S.C. 6a(a), states that:

> Excessive speculation in any commodity under contracts of sale of such commodity for future delivery made on or subject to the rules of contract markets or derivatives transaction execution facilities causing sudden or unreasonable fluctuations or unwarranted changes in the price of such commodity, is an undue and unnecessary burden on interstate commerce in such commodity.

Accordingly, section 4a(a) provides the Commission with the authority to:

> Fix such limits on the amounts of trading which may be done or positions which may be held by any person under contracts of sale of such commodity for future delivery on or subject to the rules of any contract market or derivatives transaction execution facility as the Commission finds are necessary to diminish, eliminate, or prevent such burden.

This longstanding statutory framework providing for Federal speculative position limits was supplemented with the passage of the Futures Trading Act of 1982, which acknowledged the role of exchanges in setting their own speculative position limits. The 1982 legislation also provided, under section 4a(e) of the Act, that limits set by exchanges and approved by the Commission were subject to Commission enforcement.

Finally, the Commodity Futures Modernization Act of 2000 (''CFMA'') established designation criteria and core principles with which a DCM must comply to receive and maintain designation. Among these, Core Principle 5 in section 5(d) of the Act states:

> Position Limitations or Accountability—To reduce the potential threat of market manipulation or congestion, especially during trading in the delivery month, the board of trade shall adopt position limitations or position accountability for speculators, where necessary and appropriate.

As outlined above, the regulatory structure is administered under a two-pronged framework. Under the first prong, the Commission establishes and enforces speculative position limits for futures contracts on a limited group of agricultural commodities. These Federal speculative position limits are enumerated in Commission regulation 150.2, and apply to the following futures and option markets: CBT Corn, Oats, Soybeans, Wheat, Soybean Oil, and Soybean Meal; MGE Hard Red Spring Wheat; NYBOT Cotton No. 2; and KCBT Hard Winter Wheat. Under the second prong, individual DCMs establish and enforce their own speculative position limits or position accountability provisions, subject to Commission oversight and separate authority to enforce exchange-set speculative position limits approved by the Commission. Thus, responsibility for enforcement of speculative position limits is shared by the Commission and the DCMs.[2]

II. Commission Speculative Position Limit Levels

The Commission is proposing several revisions to the Federal speculative position limit levels found in regulation 150.2 based upon its experience in administering these limits and the open interest formula found in Commission Regulation 150.5. Under the proposed revisions, spot month limits would remain unchanged from the current levels, but every single-month and all-months-combined position limit, except for CBT Oats, would be increased based upon open interest data for the most recent calendar year (2006). For all-months-combined levels, the Commission proposes to amend the limits set forth in Regulation 150.2 to the maximum levels permitted under the open interest formula, and to adjust the single month limits to reflect the existing ratio of single month to all-months-combined levels. With respect to the single month limits, a strict application of the open interest formula contained in regulation 150.5 would have resulted in somewhat lower single month limits for some commodities and higher limits for others than those proposed below. However, the Commission believes that maintaining the existing ratios between single-month and all-months-combined speculative position limit levels is of benefit to the marketplace, and thus the Commission is proposing to establish single-month limits that are consistent with that

[1] Regulation 150.2 imposes three types of position limits for each specified contract: A spot month limit, a single-month limit, and an all-months-combined limit. The Commission most recently adopted amendments to levels for Federal speculative position limits in 2005 (see 70 FR 24705 May 11, 2005).

[2] Provisions regarding the establishment of exchange-set speculative position limits were originally set forth in CFTC regulation 1.61. In 1999, the Commission simplified and reorganized its rules by relocating the substance of regulation 1.61's requirements to part 150 of the Commission's rules, thereby incorporating within part 150 provisions for both Federal speculative position limits and exchange-set speculative position limits (see 64 FR 24038, May 5, 1999). Section 4a(e) of the Act provides that a violation of a speculative position limit set by a Commission-approved exchange rule is also a violation of the Act. Thus, the Commission can enforce directly violations of exchange-set speculative position limits as well as those provided under Commission rules.

approach.[3] The open interest formula does not justify an increase in the CBT Oats single month or all-months-combined limits, and the Commission does not propose any change in their levels at this time.

In addition, with respect to the MGE and KCBT Wheat contracts, the Commission proposes to maintain parity with the levels proposed for CBT Wheat rather than establish different limits based on the open interest formula for each contract. The Commission first adopted this parity approach in an action to revise position limits in 1993.[4] At that time the Commission concluded that the breadth and liquidity of the cash markets underlying the KCBT and MGE Wheat contracts justified setting these limits at parity with little risk of regulatory harm from such action.[5] The Commission continues to believe that the breadth and liquidity of underlying cash markets, as well as continued growth in open interest, for the KCBT and MGE Wheat contracts support maintenance of these speculative position limit levels at parity with one another.[6]

Finally, the Commission is also proposing to aggregate traders' positions for purposes of ascertaining compliance with Federal speculative position limits when a DCM lists for trading a futures contract that shares substantially identical terms with a Regulation 150.2-enumerated contract listed on another DCM, including a futures contract that is cash-settled based on the settlement prices for a futures contract that is already enumerated. In this regard, when the Commission last amended regulation 150.2, it clarified its practice of aggregating traders' positions when a single DCM lists for trading two or more contracts with substantially identical terms based on the same underlying commodity characteristics, such as the CBT Corn and Mini-Corn futures contracts.[7] At the time it adopted those clarifying amendments, the Commission noted, ''that should a DCM list a contract that shared substantially identical terms with a Regulation 150.2-enumerated contract listed on another DCM, the Commission could consider at that time whether to amend regulation 150.2 to likewise apply Federal limits to the newly-listed contract.'' Since then, the New York Mercantile Exchange (NYMEX) has listed for trading a Cotton futures contract that is cash-settled based on the settlement price for the NYBOT Cotton No. 2 futures contract. The Commission believes that aggregation of traders' positions in such circumstances is necessary to protect the integrity of the existing limits by removing the ability of a trader to flout the limits by taking a position in the non-encumbered market.

Based on the criteria noted above, the Commission is proposing the following changes to the Federal speculative position limits (additions are underlined, and deletions are struck through).

Speculative Position Limits[1]
[By contract]

Contract	Spot Month	Single Month		All Months	
Chicago Board of Trade					
Corn & Mini-Corn[+2]	600	~~13,500~~	26,000	~~22,000~~	42,400
Soybeans & Mini-Soybeans[+2]..	600	~~6,500~~	8,600	~~10,000~~	13,300
Wheat & Mini-Wheat[+2].....	600	~~5,000~~	11,100	~~6,500~~	14,500
Soybean Oil	540	~~5,000~~	6,600	~~6,500~~	8,600
Soybean Meal	720	~~5,000~~	5,500	~~6,500~~	7,100
Minneapolis Grain Exchange					
Hard Red Spring Wheat	600	~~5,000~~	11,100	~~6,500~~	14,500
New York Board of Trade					
Cotton No. 2	300	~~3,500~~	5,300	~~5,000~~	7,300
Kansas City Board of Trade					
Hard Winter Wheat	600	~~5,000~~	11,100	~~6,500~~	14,500

[1] For purposes of compliance with these limits, positions in a futures contract that shares substantially identical terms with a contract market enumerated herein, including a futures contract that is cash-settled based on the settlement price of an enumerated contract market, shall be aggregated with positions in the enumerated contract market.

[2] For purposes of compliance with these limits, positions in the regular sized and mini-sized contracts shall be aggregated.

[3] The Commission used this more flexible approach when it last revised the Federal speculative position limits in 2005 (*See* 70 FR 24705, May 11, 2005).

[4] *See* 58 FR 17973 (April 7, 1993).

[5] *Id.* at 17979.

[6] The Commission maintained parity between the CBT, MGE, and KCBT wheat contracts when it last revised the Federal speculative position limits in May, 2005.

[7] 70 FR 24705, (May 11, 2005).

III. Related Matters

A. Cost Benefit Analysis

Section 15(a) of the Act requires the Commission to consider the costs and benefits of its action before issuing a new regulation under the Act. By its terms, section 15(a) does not require the Commission to quantify the costs and benefits of a new regulation or to determine whether the benefits of the proposed regulation outweigh its costs. Rather, section 15(a) requires the Commission to ''consider the costs and benefits'' of the subject rule.

Section 15(a) further specifies that the costs and benefits of the proposed rule shall be evaluated in light of five broad areas of market and public concern: (1) Protection of market participants and the public; (2) efficiency, competitiveness, and financial integrity of futures markets; (3) price discovery; (4) sound risk management practices; and (5) other public interest considerations. The Commission may, in its discretion, give greater weight to any one of the five enumerated areas of concern and may, in its discretion, determine that, notwithstanding its costs, a particular rule is necessary or appropriate to protect the public interest or to effectuate any of the provisions or to accomplish any of the purposes of the Act.

The proposed rule amendments impose limited additional costs in terms of reporting requirements, particularly since entities trading in or holding large positions, which either approach or meet the speculative limits of the rules herein, already file large trader reports with the Commission. Moreover, the amendments proposed herein would increase Federal speculative position limits for some commodities and, to that extent, reduce the compliance costs associated with these speculative position limits. The countervailing benefits to any additional costs are that the continued inclusion of appropriate speculative limits will help to ensure the maintenance of competitive and efficient markets, protect the price discovery and risk shifting functions of those markets, and protect market participants and the public interest.

B. Regulatory Flexibility Act

The Regulatory Flexibility Act (RFA), 5 U.S.C. 601 et seq., requires federal agencies, in proposing rules, to consider the impact of those rules on small businesses. The Commission believes that the proposed rule amendments to raise Commission speculative position limits would only impact large traders. The Commission has previously determined that large traders are not small entities for purposes of the RFA.[8] Therefore, the Acting Chairman, on behalf of the Commission, hereby certifies, pursuant to 5 U.S.C. 605(b), that the action taken herein will not have a significant economic impact on a substantial number of small entities. The Commission also notes in this regard that the proposed rules will raise speculative limit levels and thereby reduce the regulatory burden on all affected entities.

C. Paperwork Reduction Act

When publishing proposed rules, the Paperwork Reduction Act of 1995 (44 U.S.C. 3507(d)) imposes certain requirements on federal agencies (including the Commission) in connection with their conducting or sponsoring any collection of information as defined by the Paperwork Reduction Act. In compliance with the Paperwork Reduction Act, the Commission, through this rule proposal, solicits public comment to: (1) Evaluate whether the proposed collection of information is necessary for the proper performance of the functions of the agency, including the validity of the methodology and assumptions used; (2) evaluate the accuracy of the agency's estimate of the burden of the proposed collection of information including the validity of the methodology and assumptions used; (3) enhance the quality, utility and clarity of the information to be collected; and (4) minimize the burden of the collection of information on those who are to respond through the use of appropriate automated, electronic, mechanical, or other technological collection techniques or other forms of information technology, e.g., permitting electronic submission of responses.

The Commission has submitted the proposed rule and its associated information collection requirements to the Office of Management and Budget. The proposed rule is part of two approved information collections. The burdens associated with these rules are as follows:

Collection Number

[3038–0009]

Average burden hours per response: 3.
Number of respondents: 2946.
Frequency of response: On occasion.

Collection Number

[3038–0013]

Average burden hours per response: 3.
Number of respondents: 9.
Frequency of response: On occasion.

List of Subjects in 17 CFR Part 150

Agricultural commodities, Bona fide hedge positions, Position limits, Spread exemptions.

In consideration of the foregoing, pursuant to the authority contained in the Commodity Exchange Act, the Commission hereby proposes to amend part 150 of chapter I of title 17 of the Code of Federal Regulations as follows:

PART 150—LIMITS ON POSITIONS

1. The authority citation for part 150 is revised to read as follows:

Authority: 7 U.S.C. 6a, 6c, and 12a(5), as amended by the Commodity Futures Modernization Act of 2000, Appendix E of Pub. L. 106–554, 114 Stat. 2763 (2000).

2. Section 150.2 is revised to read as follows:

§ 150.2 Position limits.

No person may hold or control positions, separately or in combination, net long or net short, for the purchase or sale of a commodity for future delivery or, on a futures-equivalent basis, options thereon, in excess of the following:

SPECULATIVE POSITION LIMITS [1]

[In contract units]

Contract	Spot month	Single month	All months
Chicago Board of Trade			
Corn and Mini-Corn [2]	600	26,000	42,400
Oats	600	1,400	2,000

[8] 47 FR 18618 (April 30, 1982).

SPECULATIVE POSITION LIMITS [1]—Continued

[In contract units]

Contract	Spot month	Single month	All months
Soybeans and Mini-Soybeans [2]	600	8,600	13,300
Wheat and Mini-Wheat [2]	600	11,100	14,500
Soybean Oil	540	6,600	8,600
Soybean Meal	720	5,500	7,100
Minneapolis Grain Exchange			
Hard Red Spring Wheat	600	11,100	14,500
New York Board of Trade			
Cotton No. 2	300	5,300	7,300
Kansas City Board of Trade			
Hard Winter Wheat	600	11,100	14,500

[1] For purposes of compliance with these limits, positions in a futures contract that shares substantially identical terms with a contract market enumerated herein, including a futures contract that is cash-settled based on the settlement price of an enumerated contract market, shall be aggregated with positions in the enumerated contract market.

[2] For purposes of compliance with these limits, positions in the regular-sized and mini-sized contracts shall be aggregated.

Issued by the Commission this November 15, 2007, in Washington, DC.

David Stawick,

Secretary of the Commission.

[FR Doc. E7–22681 Filed 11–20–07; 8:45 am]

BILLING CODE 6351–01–P

DEPARTMENT OF HOMELAND SECURITY

Bureau of Customs and Border Protection

19 CFR Part 4

[USCBP–2007–0098]

Hawaiian Coastwise Cruises

AGENCY: Customs and Border Protection; Department of Homeland Security.

ACTION: Proposed interpretation; solicitation of comments.

SUMMARY: This document proposes new criteria to be used by Customs and Border Protection (''CBP'') to determine whether non-coastwise-qualified vessels are in violation of the Passenger Vessel Services Act (PVSA) when engaging in cruise itineraries in which passengers board at a U.S. port, the vessel calls at several Hawaiian ports, and then the vessel proceeds to a foreign port or ports for a brief period, before ultimately returning to the original U.S. port of embarkation where the passengers disembark to complete their cruise. CBP believes these itineraries are contrary to the PVSA because it appears that the primary objective of the foreign stop is evasion of the PVSA.

DATES: Comments must be received on or before December 21, 2007.

FOR FURTHER INFORMATION CONTACT: Glen E. Vereb, Cargo Security, Carriers & Immigration Branch, Office of International Trade, (202) 572–8730.

ADDRESSES: You may submit comments, identified by docket number, by one of the following methods:

- *Federal eRulemaking Portal: http://www.regulations.gov.* Follow the instructions for submitting comments.
- *Mail*: Border Security Regulations Branch, Office of International Trade, Customs and Border Protection, 1300 Pennsylvania Avenue, NW., (Mint Annex), Washington, DC 20229

SUPPLEMENTARY INFORMATION:

I. Public Participation

Interested persons are invited to participate in this proposed interpretation by submitting written data, views, or arguments on all aspects of the proposed interpretation. Customs and Border Protection (CBP) also invites comments that relate to the economic, environmental, or federalism effects that might result from this proposed interpretation. Comments that will provide the most assistance to CBP in developing these procedures will reference a specific portion of the proposed interpretation, explain the reason for any recommended change, and include data, information, or authority that support such recommended change.

Instructions: All submissions received must include the agency name and docket number for this proposed interpretation. All comments received will be posted without change to *http://www.regulations.gov,* including any personal information provided.

Docket: For access to the docket to read background documents or comments received, go to *http://www.regulations.gov.* Submitted comments may also be inspected on regular business days between the hours of 9 a.m. and 4:30 p.m. at the Office of International Trade, Customs and Border Protection, 799 9th Street, NW., 5th Floor, Washington, DC. Arrangements to inspect submitted documents should be made in advance by calling Mr. Joseph Clark at (202) 572–8768.

II. Background

The maritime cabotage law governing the transportation of passengers was first established by section 8 of the Passenger Vessel Services Act of June 19, 1886 (the ''PVSA''), 24 Stat. 81; as amended by section 2 of the Act of February 17, 1898, 30 Stat. 248, formerly codified at 46 U.S.C. App. 289 (now codified at 46 U.S.C. 55103). That statute provided that no foreign vessel shall transport passengers between ports or places in the United States, either directly or by way of a foreign port, under a penalty of $200 (now $300, as promulgated in T.D. 03–11 pursuant to the Federal Civil Penalties Inflation Adjustment Act of 1990, 28 U.S.C. 2461 note) for each passenger so transported and landed.

The intent of the maritime cabotage laws, including the PVSA, was to provide a ''legal structure that guarantees a coastwise monopoly to

American shipping and thereby promotes development of the American merchant marine.'' *Autolog Corp.* v. *Regan,* 731 F.2d 25, 28 (DC Cir. 1984); *see also The Granada,* 35 F.Supp. 892, 893, 1940 AMC 1601 (DC Pa 1940) (stating that the legislative aim of section 289 [now 55102] was the creation of a practical monopoly of coastwise and domestic shipping business for United States ships). In other words, the PVSA was enacted to advance the United States merchant marine and fleet by restricting the use of foreign-owned/flagged passenger vessels in United States territorial waters.

Passenger vessel transportation between United States ports has historically been viewed to be part of the coastwise trade after the enactment of the PVSA. This view is premised on the concepts of continuity of the voyage and whether its *intended purpose or objective* was coastwise transportation. In other words, the PVSA was held to be violated if the coastwise movement was continuous or if the purpose of the trip was a coastwise voyage. (See 18 O.A.G. 445, September 4, 1886; 28 O.A.G. 204, February 16, 1910; 29 O.A.G. 318, February 12, 1912; 30 O.A.G. 44, February 1, 1913; 34 O.A.G. 340, December 24, 1924; and 36 O.A.G. 352, August 13, 1930.)

The CBP regulations promulgated pursuant to the PVSA are found at section 4.80a of title 19 of the Code of Federal Regulations (19 CFR 4.80a) and are reflective of the above cited Office of the Attorney General decisions. These regulations provide, among other things, that a non-coastwise-qualified vessel which ''embarks'' a passenger at a port in the United States embraced within the coastwise laws (a ''coastwise port'') will be deemed to have landed that passenger in violation of the PVSA if the passenger ''disembarks'' at a different coastwise port on a voyage to one or more coastwise ports and a ''nearby foreign port or ports'' (as defined in 19 CFR 4.80a(a)(2); *see also* 19 CFR 4.80a(b)(2)). The terms ''embark'' and ''disembark'' are words of art which are defined as going on board a vessel for the duration of a specific voyage, and leaving a vessel at the conclusion of a specific voyage, respectively. (*See* 19 CFR 4.80a(a)(4).)

The references in section 4.80a to ''nearby foreign ports'' (defined in 19 CFR 4.80a(a)(2)) are the results of attempts by CBP to apply an Office of the Attorney General's opinion dated February 26, 1910 (28 O.A.G. 204). In that case, a foreign-flag vessel transported 615 passengers on a voyage around the world, beginning in New York and concluding in San Francisco. The Attorney General opined that since the primary object of the voyage was to visit various parts of the world on a pleasure tour returning home via California, and not to be transported in domestic commerce, the transportation was not in violation of the PVSA.

The 1910 Attorney General's opinion was extended to voyages that included foreign ports other than nearby foreign ports. (*See* Treasury Decision (T.D.) 68–285 (33 FR 16558), November 14, 1968.) However, voyages solely to one or more coastwise ports have always been considered predominantly coastwise. Therefore non-coastwise-qualified vessels engaging in such a voyage where passengers temporarily go ashore at a coastwise port have been deemed to have violated the PVSA.

III. Current Law and Policy

Pursuant to Public Law 109–304, 120 Stat. 1632, enacted on October 6, 2006, Title 46, United States Code, was substantially reorganized and recodified. Consequently, the PVSA is now codified at 46 U.S.C. 55103 and provides that no vessel shall transport passengers between ports or places in the United States, either directly or by way of a foreign port, under a penalty of $300 for each person so transported and landed, except one that: (1) Is wholly owned by citizens of the United States for purposes of engaging in the coastwise trade; and (2) has been issued a certificate of documentation with a coastwise endorsement or is exempt from documentation but would otherwise be eligible for such a certificate and endorsement.

In 2003, Congress enacted Public Law 108–7, Division B, Title II, Section 211, for the purpose of revitalizing the oceangoing U.S.-flag cruise industry in Hawaii (the ''2003 Act''). Three oceangoing U.S.-flag cruise ships, PRIDE OF ALOHA, PRIDE OF AMERICA and PRIDE OF HAWAII, were documented with coastwise privileges pursuant to the 2003 Act. These vessels entered regular service in Hawaii in 2004, 2005 and 2006, respectively, and pursuant to the express language of the 2003 Act, are limited in their operation to providing ''* * * regular service transporting passengers between or among the islands of Hawaii * * *''

The CBP regulations promulgated pursuant to the PVSA are set forth in 19 CFR 4.80a and have remained unchanged throughout both the recodification of Title 46 of the United States Code and the enactment of the 2003 Act. They provide that a violation of the PVSA occurs when passengers ''embark'' (board a vessel for the duration of a voyage) a non-coastwise-qualified vessel at one U.S. port, and ''disembark'' (leave the vessel at the conclusion of a voyage) at a different U.S. port, unless they proceed with the vessel to a ''distant foreign port'' (i.e., any port not considered a ''nearby foreign port'' which is defined as any port located in North America, Central America, Bermuda, or the West Indies including the Bahamas). Currently, these regulations do not contain specific criteria for non-coastwise-qualified vessels on itineraries including U.S. ports and either ''nearby'' or ''distant'' foreign ports in order for such foreign port calls to be compliant with the PVSA.

To reiterate, the applicable CBP regulations provide that the PVSA is violated when a non-coastwise-qualified vessel transports a passenger on a voyage solely to one or more coastwise ports and the passenger disembarks or goes ashore temporarily at a coastwise port. (19 CFR 4.80a(b)(1).) Furthermore, a violation of the PVSA also occurs when a non-coastwise-qualified vessel transports a passenger on a voyage to one or more coastwise ports and a nearby foreign port or ports (but no other foreign port) and the passenger disembarks at a coastwise port other than the port of embarkation. (19 CFR 4.80a(b)(2).) However, there is no violation of the PVSA when a passenger is on a voyage to one or more coastwise ports and a distant foreign port or ports (whether or not the voyage includes a nearby foreign port or ports) and the passenger disembarks at a coastwise port, provided the passenger has proceeded with the vessel to a distant foreign port. (19 CFR 4.80a(b)(3).)

IV. Request From MARAD To Provide Guidance

The U.S. Department of Transportation Maritime Administration (MARAD) has requested that CBP take action to ensure enforcement of the PVSA. MARAD has asked CBP to address the recent activities of foreign-flag passenger vessels in the Hawaiian Islands that are imposing economic hardship on the operations of coastwise-qualified cruise ship operators.

In April of 2007, the operator of the three U.S.-flag cruise vessels operating solely in Hawaii pursuant to the 2003 Act announced their intent to withdraw the PRIDE OF HAWAII from the Hawaii market and redeploy her to Europe. The operator intends to re-flag the vessel to foreign registry, directly resulting in the loss of over 1,100 crewmember jobs. The primary reason cited for this decision is the rapid increase in foreign-flag competition entering the Hawaii market

from the West Coast. This competition is evidenced in published cruise itineraries of foreign-flag carriers offering a variety of round trip cruises that depart from a U.S. port, call at several Hawaiian ports, then proceed to Ensenada, Mexico for a brief period, usually in the early morning, and ultimately return to the original U.S. port of embarkation where the passengers disembark to complete their cruise. These cruises are often marketed as ''Hawaii cruises'' and except for the brief stop in the nearby foreign port of Ensenada, are purely coastwise in nature. It is these cruise itineraries that pose an imminent threat to the two remaining U.S.-flagged, coastwise endorsed passenger vessels that, pursuant to the 2003 Act, are currently engaging in cruise itineraries that include only ports of call within the Hawaiian Islands.

V. Preliminary Notice

In response to MARAD's concerns, CBP sent letters to two carriers known to operate the itineraries in question, as well as to the Cruise Lines International Association, Inc., stating that CBP believes that these itineraries are contrary to the PVSA because it appears that the primary objective of the Ensenada stop is evasion of the PVSA. The letters further indicated that CBP is taking steps to publish this position.

VI. CBP's Proposed Interpretive Rule

Accordingly, in this document, CBP is proposing to provide that cruise itineraries for non-qualified coastwise vessels which allow passengers to board at a U.S. port, call at several Hawaiian ports, proceed to a foreign port or ports for a brief period, and then ultimately return to the original U.S. port of embarkation for disembarkation are not consistent with the PVSA and the regulations promulgated pursuant thereto. Specifically, CBP interprets a voyage to be ''solely to one or more coastwise ports'' even where it stops at a foreign port, unless the stop at the foreign port is a legitimate object of the cruise. CBP will presume that a stop at a foreign port is not a legitimate object of the cruise unless:

(1) The stop lasts at least 48 hours at the foreign port;

(2) The amount of time at the foreign port is more than 50 percent of the total amount of time at the U.S. ports of call; and

(3) The passengers are permitted to go ashore temporarily at the foreign port.

Accordingly, CBP proposes to adopt an interpretive rule under which it will presume that any cruise itinerary that does not include a foreign port call that satisfies each of these three criteria constitutes coastwise transportation of passengers in violation of 19 CFR 4.80a(b)(1).

Dated: November 16, 2007.

W. Ralph Basham,

Commissioner, Customs and Border Protection.

[FR Doc. E7–22788 Filed 11–20–07; 8:45 am]

BILLING CODE 9111–14–P

DEPARTMENT OF THE TREASURY

Alcohol and Tobacco Tax and Trade Bureau

27 CFR Part 9

[Notice No. 76]

RIN 1513–AB49

Proposed Establishment of the Leona Valley Viticultural Area (2007R–281P)

AGENCY: Alcohol and Tobacco Tax and Trade Bureau, Treasury.

ACTION: Notice of proposed rulemaking.

SUMMARY: The Alcohol and Tobacco Tax and Trade Bureau proposes to establish the 13.4 square mile ''Leona Valley'' viticultural area in the northeast part of Los Angeles County, California. We designate viticultural areas to allow vintners to better describe the origin of their wines and to allow consumers to better identify wines they may purchase. We invite comments on this proposed addition to our regulations.

DATES: We must receive written comments on or before January 22, 2008.

ADDRESSES: You may send comments on this notice to one of the following addresses:

- *http://www.regulations.gov* (Federal e-rulemaking portal; follow the instructions for submitting comments); or
- Director, Regulations and Rulings Division, Alcohol and Tobacco Tax and Trade Bureau, P.O. Box 14412, Washington, DC 20044–4412.

See the Public Participation section of this notice for specific instructions and requirements for submitting comments, and for information on how to request a public hearing.

You may view copies of this notice, selected supporting materials, and any comments we receive about this proposal at *http://www.regulations.gov* under Docket No. 2007–0066. You also may view copies of this notice, all related petitions, maps, or other supporting materials, and any comments we receive about this proposal by appointment at the TTB Information Resource Center, 1310 G Street, NW., Washington, DC 20220. To make an appointment, call 202–927–2400.

FOR FURTHER INFORMATION CONTACT: N.A. Sutton, Regulations and Rulings Division, Alcohol and Tobacco Tax and Trade Bureau, 925 Lakeville St., No. 158, Petaluma, CA 94952; phone 415–271–1254.

SUPPLEMENTARY INFORMATION:

Background on Viticultural Areas

TTB Authority

Section 105(e) of the Federal Alcohol Administration Act (FAA Act), 27 U.S.C. 205(e), authorizes the Secretary of the Treasury to prescribe regulations for the labeling of wine, distilled spirits, and malt beverages. The FAA Act provides that these regulations should, among other things, prohibit consumer deception and the use of misleading statements on labels, and ensure that labels provide the consumer with adequate information as to the identity and quality of the product. The Alcohol and Tobacco Tax and Trade Bureau (TTB) administers the regulations promulgated under the FAA Act.

Part 4 of the TTB regulations (27 CFR part 4) allows the establishment of definitive viticultural areas and the use of their names as appellations of origin on wine labels and in wine advertisements. Part 9 of the TTB regulations (27 CFR part 9) contains the list of approved viticultural areas.

Definition

Section 4.25(e)(1)(i) of the TTB regulations (27 CFR 4.25(e)(1)(i)) defines a viticultural area for American wine as a delimited grape-growing region distinguishable by geographical features, the boundaries of which have been recognized and defined in part 9 of the regulations. These designations allow vintners and consumers to attribute a given quality, reputation, or other characteristic of a wine made from grapes grown in an area to its geographic origin. The establishment of viticultural areas allows vintners to describe more accurately the origin of their wines to consumers and helps consumers to identify wines they may purchase. Establishment of a viticultural area is neither an approval nor an endorsement by TTB of the wine produced in that area.

Requirements

Section 4.25(e)(2) of the TTB regulations outlines the procedure for proposing an American viticultural area and provides that any interested party

may petition TTB to establish a grape-growing region as a viticultural area. Section 9.3(b) of the TTB regulations requires the petition to include—

- Evidence that the proposed viticultural area is locally and/or nationally known by the name specified in the petition;
- Historical or current evidence that supports setting the boundary of the proposed viticultural area as the petition specifies;
- Evidence relating to the geographical features, such as climate, soils, elevation, and physical features, that distinguish the proposed viticultural area from surrounding areas;
- A description of the specific boundary of the proposed viticultural area, based on features found on United States Geological Survey (USGS) maps; and
- A copy of the appropriate USGS map(s) with the proposed viticultural area's boundary prominently marked.

Leona Valley Petition

Mr. Ralph Jens Carter submitted a petition for the 13.4 square mile Leona Valley viticultural area on behalf of the Antelope Valley Winegrowers Association, the Leona Valley Winery, and Donato Vineyards. The area currently includes 20 acres of vineyards, and more acreage for wine grape growing is under development.

The proposed boundary line defines an area where viticulture is already established or has potential for establishment. Consequently, the area defined is limited to the valley floor and side slopes. The distinguishing features of the proposed viticultural area include the physical characteristics of the San Andreas Fault system, the fault-controlled Leona Valley, and the surrounding, high-elevation mountains. The climate, geology, and soils distinguish the proposed viticultural area from areas outside of the proposed boundary line.

Name Evidence

According to the petitioner, the name ''Leona'' derives from an early rancher named Miguel Leonis, and in the 1880s, a homesteader from Nebraska called the area ''Leona Valley.'' The ''Leona Valley'' name identifies a valley, a town within the valley, a ranch (the Leona Valley Ranch), and a festival (the annual Leona Valley Cherry Festival).

The petitioner provides maps that show that the Leona Valley is located in the northeast part of Los Angeles County, California. The ''Leona Valley'' name appears on the USGS Ritter Ridge, Sleepy Valley, and Del Sur quadrangle maps, which the petitioner uses to define the boundary line of the proposed viticultural area. The Sleepy Valley map also identifies a small town in the valley as ''Leona Valley.'' A recent atlas identifies both a valley and small town within the proposed viticultural area as ''Leona Valley'' (The DeLorme Southern and Central California Atlas and Gazetteer, 2005, page 79).

Boundary Evidence

According to the petitioner, and as evidenced by the written boundary description and the USGS Sleepy Valley quadrangle map, the proposed viticultural area includes the town and valley which are both named ''Leona Valley.'' The proposed boundary line borders the Angeles National Forest to the west and the Antelope Valley and the Mojave Desert to the northeast. Mountains and hills surround all sides of the valley. The floor and side slopes of the Leona Valley influence the shape of the proposed viticultural area, which includes vineyards in remote, but suitable, areas, but excludes steep slopes where erosion is a hazard.

According to the petitioner, historically, the Native American Shoshone Tribe lived as hunters and gatherers in the Leona Valley area. In the mid-1800s, when the Shoshone departed the area, immigrants from Spain and Mexico started cattle ranching. During the 1880s, homesteaders from Nebraska, France, and Germany divided the ranches into smaller parcels for farms.

In the early 1900s the John Ritter family began to plant grapes in the Leona Valley area. The Ritter family winery, Belvino Vineyards, aged wine in a cave for at least 5 years before bottling and selling the wine on national and international markets. During Prohibition, the Ritters ceased producing wine. The petitioner notes that local residents report that zinfandel and mission vines planted in the early 1900s are still growing.

Currently, the proposed Leona Valley viticultural area contains 20 acres of commercial wine grape production on David Reynolds' Leona Valley Winery and an acreage of pinot noir grapes on land owned by Donato Vineyards. Donato Vineyards, at the southeast end of the Leona Valley, plans to develop another 10 acres for growing wine grapes and to start producing wine in 2007–8.

Distinguishing Features

The petitioner states that the distinguishing features of the proposed Leona Valley viticultural area consist of climate, physical features, geology, and soils. As evidence of many of the distinguishing features of the proposed viticultural area, the petitioner cites the Soil Survey of the Antelope Valley Area, California (United States Department of Agriculture, Soil Conservation Service, in cooperation with the University of California Agricultural Experiment Station, 1970).

Climate

The soil survey designates the southern and western parts of the Antelope Valley and the Leona Valley, as Major Land Resource Area (MLRA) 19, Southern California Coastal Plain. The petitioner explains that MLRA 19 has a distinctive combination of climate, soils, and mild temperatures, including an annual, 210- to 300-day frost-free period. Also, MLRA 19 is hot and dry in summer and cool and moist in winter. It is suitable to a wide variety of field, fruit, and nut crops. Annual precipitation ranges from 9 to 16 inches in MLRA 19, and irrigation use is routine. According to the soil survey, the land management techniques and cropping systems used in MLRA 19 are different from those used in the adjacent MLRA 30, Mojave Basin and Range, and MLRA 20, Southern California Mountains.

The petitioner also cites the Sunset Western Garden Book, which classifies the Leona Valley area as Zone No. 18, Southern California's Interior Valleys (Sunset Publishing Corporation, Menlo Park, California, 1995). In this zone the continental air mass is a major influence on climate, and the Pacific Ocean determines the climate in the valley only about 15 percent of the time.

According to the petitioner, annual precipitation within the proposed Leona Valley viticultural area ranges from 9 to 12 inches. In the Mojave Desert to the east of the Leona Valley, the range is only 4 to 9 inches. In the mountainous areas surrounding Leona Valley to the south, west, and north, the range is between 12 and 20 inches.

The petitioner states that the growing season of the proposed viticultural area has warm days and cool nights. The cool nights slow the ripening of the grapes, helping the grapes to retain their natural acidity. Air drainage off the slopes of the hills and mountains helps prevent spring frost damage to grapes.

The petitioner submitted comparative data based on the Winkler Climate Classification System. In the Winkler climate classification system, heat accumulation per year defines climatic regions. As a measurement of heat accumulation during the growing season, 1 degree day accumulates for each degree Fahrenheit that a day's

mean temperature is above 50 degrees, which is the minimum temperature required for grapevine growth; see ''General Viticulture,'' by Albert J. Winkler, University of California Press, 1974. Climatic region I has less than 2,500 degree days per year; region II, 2,501 to 3,000; region III, 3,001 to 3,500; region IV, 3,501 to 4,000; and region V, 4,001 or more.

The petitioner states that the air temperatures during the growing season in the proposed viticultural area have an average heat summation of 4,060 degree days, which falls into the low range of region V. The annual heat summation totals of the regions in and around the proposed Leona Valley viticultural area are listed in the table below.

Region	Relative position with reference to Leona Valley	Average annual heat summation in degree days/climatic region
Leona Valley	Within	4,060 (low region V).
Sandberg	25 miles west-northwest	3,370 (mid region III).
Tehachapi	38 miles north-northwest	2,900 (high region II).
Lancaster	15 miles northeast	4,600 (high region V).

Physical Features

According to USGS maps of the region, the Leona Valley is a low, sloping landform with elevations between 2,932 and 3,800 feet. It is surrounded by higher hills, Portal Ridge, Ritter Ridge, Sierra Pelona, and the mountains of the Angeles National Forest, the highest of which has an elevation of 4,215 feet. According to the petitioner, the Leona Valley has isolated knolls of significantly different elevations and, in places, narrows to a width of a mile.

The petitioner explains that the San Andreas Fault, a major continental fault system, is a significant distinguishing feature of the proposed Leona Valley viticultural area. As shown on the USGS maps of the region, the fault and its tributary faults in the Leona Valley trend southeast to northwest. The petitioner explains that the Leona Valley formed either when two parallel fault lines lifted mountains beside a drop-down area or when erosion over thousands of years caused a deep dissection in the fault zone. Seismic movement along the fault line has formed ridges and isolated hills and exposed various rocks.

The petitioner states that ground water provides a plentiful supply of water for vineyard irrigation within the proposed Leona Valley viticultural area. As shown on the Ritter Ridge, Sleepy Valley, and Del Sur quadrangle USGS maps, many agricultural wells tap into the ground water.

Geology

The petitioner explains that relative displacement and a lack of continuity of the rocks on either side of the San Andreas Fault contribute to the complexity, weakening, and erosion of the parent rock. Near some portions of the fault the varying sedimentary strata determine the geologic formation.

Citing a California Department of Conservation Geologic Map, the petitioner notes that the mostly nonmarine and unconsolidated alluvium on the Leona Valley floor is from the Quaternary Period, or about 2 million years old or less. The various types of schist, quartz, granite, and a complex of mixed, Precambrian igneous and metamorphic rocks in the valley contrast with the surrounding hills, which formed on Paleozoic or Mesozoic strata, 65 to 280 million years ago.

Soils

The petitioner explains that a fault increases the variety of rock exposed on the surface and eventually results in the formation of a greater variety of soil textures. Thus, the San Andreas fault influenced the properties and mineralogy of the soils in the Leona Valley.

The petitioner states that the soils on the Leona Valley floor differ from those beyond the boundary line of the proposed viticultural area. The surface layer of the soils in the Leona Valley formed in a mixture of soil material that originated on the surrounding mountains and decayed organic matter. Multiple rock types on the valley floor were the parent material of alluvial soils that have diverse mineralogy and texture. The soils on the valley floor are deep and moderately drained; those on the surrounding hills are shallow and excessively well drained.

According to the soil survey, the soils of the proposed Leona Valley viticultural area are mainly the Hanford-Ramona-Greenfield association on alluvial fans and terraces. This association consists of nearly level to moderately steep, well drained, very deep soils that have a surface layer of loamy sand to loam. Hanford soils are well drained. They do not have a hardpan or a compacted clay layer, and are easily worked. Included in this association are some areas of deep, poorly drained Chino loam, which does not have a seasonal high water table. The petitioner explains that to control wetness in poorly drained areas, growers may install artificial drainage or plant competing crops.

The petitioner explains that the Vista-Amagora association is among the dominant soils at higher elevations outside the boundary line of the proposed Leona Valley viticultural area. This association consists of strongly sloping to steep, well drained to excessively drained soils that have a surface layer of coarse sandy loam. South of the valley, in smaller areas, is the Anaverde-Godde association. It consists of moderately steep or steep, well drained soils that have a surface layer of sandy loam or loam.

Boundary Description

See the narrative boundary description of the petitioned-for viticultural area in the proposed regulatory text published at the end of this notice.

Maps

The petitioner provided the required maps, and we list them below in the proposed regulatory text.

TTB Determination

TTB concludes that this petition to establish the 13.4 square mile Leona Valley viticultural area merits consideration and public comment, as invited in this notice.

Impact on Current Wine Labels

Part 4 of the TTB regulations prohibits any label reference on a wine that indicates or implies an origin other than the wine's true place of origin. If we establish this proposed viticultural area, its name, ''Leona Valley,'' will be recognized as a name of viticultural significance under 27 CFR 4.39(i)(3). The text of the proposed regulation clarifies this point. Consequently, wine bottlers using ''Leona Valley'' in a brand name, including a trademark, or in another label reference as to the origin of the wine, will have to ensure that the product is eligible to use the viticultural area's name as an appellation of origin.

On the other hand, we do not believe that the ''Leona'' part of the proposed viticultural area name, standing alone, should have viticultural significance if the new area is established. Accordingly, the proposed part 9 regulatory text set forth in this document specifies only the full ''Leona Valley'' name as a term of viticultural significance for purposes of part 4 of the TTB regulations.

For a wine to be eligible to use as an appellation of origin a viticultural area name or other term specified as being viticulturally significant in part 9 of the TTB regulations, at least 85 percent of the wine must be derived from grapes grown within the area represented by that name or other term, and the wine must meet the other conditions listed in 27 CFR 4.25(e)(3). If the wine is not eligible to use the viticultural area name or other term as an appellation of origin and that name or other term appears in the brand name, then the label is not in compliance and the bottler must change the brand name and obtain approval of a new label. Similarly, if the viticultural area name or other term appears in another reference on the label in a misleading manner, the bottler would have to obtain approval of a new label. Accordingly, if a new label or a previously approved label uses the name ''Leona Valley'' for a wine that does not meet the 85 percent standard, the new label will not be approved, and the previously approved label will be subject to revocation, upon the effective date of the approval of the Leona Valley viticultural area.

Different rules apply if a wine has a brand name containing a viticultural area name or other viticulturally significant term that was used as a brand name on a label approved before July 7, 1986. See 27 CFR 4.39(i)(2) for details.

Public Participation

Comments Invited

We invite comments from interested members of the public on whether we should establish the proposed viticultural area. We are also interested in receiving comments on the sufficiency and accuracy of the name, boundary, climatic, and other required information submitted in support of the petition. Please provide any available specific information in support of your comments.

Because of the potential impact of the establishment of the proposed Leona Valley viticultural area on wine labels that include the words ''Leona Valley'' as discussed above under ''Impact on Current Wine Labels,'' we are particularly interested in comments regarding whether there will be a conflict between the proposed area name and currently used brand names. If a commenter believes that a conflict will arise, the comment should describe the nature of that conflict, including any negative economic impact that approval of the proposed viticultural area will have on an existing viticultural enterprise. We are also interested in receiving suggestions for ways to avoid any conflicts, for example by adopting a modified or different name for the viticultural area.

Although TTB believes that only the full ''Leona Valley'' name should be considered to have viticultural significance upon establishment of the proposed new viticultural area, we also invite comments from those who believe that ''Leona'' standing alone would have viticultural significance upon establishment of the area. Comments in this regard should include documentation or other information supporting the conclusion that use of ''Leona'' on a wine label could cause consumers and vintners to attribute to the wine in question the quality, reputation, or other characteristic of wine made from grapes grown in the proposed Leona Valley viticultural area.

Submitting Comments

You may submit comments on this notice by one of the following two methods:

- *Federal e-Rulemaking Portal:* To submit a comment on this notice using the online Federal e-rulemaking portal, visit *http://www.regulations.gov* and select ''Alcohol and Tobacco Tax and Trade Bureau'' from the agency drop-down menu and click ''Submit.'' In the resulting docket list, click the ''Add Comments'' icon for Docket No. 2007–0066 and complete the resulting comment form. You may attach supplemental files to your comment. More complete information on using Regulations.gov, including instructions for accessing open and closed dockets and for submitting comments, is available through the site's ''User Tips'' link.
- *Mail:* You may send written comments to the Director, Regulations and Rulings Division, Alcohol and Tobacco Tax and Trade Bureau, P.O. Box 14412, Washington, DC 20044–4412.

Please submit your comments by the closing date shown above in this notice. Your comments must include this notice number and your name and mailing address. Your comments must be legible and written in language acceptable for public disclosure. We do not acknowledge receipt of comments, and we consider all comments as originals.

If you are commenting on behalf of an association, business, or other entity, your comment must include the entity's name as well as your name and position title. If you comment via *http://www.regulations.gov*, please enter the entity's name in the ''Organization'' blank of the comment form. If you comment via mail, please submit your entity's comment on letterhead.

You may also write to the Administrator before the comment closing date to ask for a public hearing. The Administrator reserves the right to determine whether to hold a public hearing.

Confidentiality

All submitted comments and attachments are part of the public record and subject to disclosure. Do not enclose any material in your comments that you consider to be confidential or inappropriate for public disclosure.

Public Disclosure

On the Federal e-rulemaking portal, we will post, and you may view, copies of this notice, selected supporting materials, and any electronic or mailed comments we receive about this proposal. To view a posted document or comment, go to *http://www.regulations.gov* and select ''Alcohol and Tobacco Tax and Trade Bureau'' from the Agency drop-down menu and click ''Submit.'' In the resulting docket list, click the appropriate docket number, then click the ''View'' icon for any document or comment posted under that docket number.

All submitted and posted comments will display the commenter's name, organization (if any), city, and State, and, in the case of mailed comments, all address information, including e-mail addresses. We may omit voluminous attachments or material that we consider unsuitable for posting.

You also may view copies of this notice, all related petitions, maps, and other supporting materials, and any electronic or mailed comments we receive about this proposal by appointment at the TTB Information Resource Center, 1310 G Street, NW., Washington, DC 20220. You may also obtain copies at 20 cents per 8.5 x 11-inch page. Contact our information specialist at the above address or by telephone at 202–927–2400 to schedule an appointment or to request copies of comments or other materials.

Regulatory Flexibility Act

We certify that this proposed regulation, if adopted, would not have a significant economic impact on a substantial number of small entities. The proposed regulation imposes no new reporting, recordkeeping, or other administrative requirement. Any benefit derived from the use of a viticultural area name would be the result of a proprietor's efforts and consumer acceptance of wines from that area. Therefore, no regulatory flexibility analysis is required.

Executive Order 12866

This proposed rule is not a significant regulatory action as defined by Executive Order 12866. Therefore, it requires no regulatory assessment.

Drafting Information

N.A. Sutton of the Regulations and Rulings Division drafted this notice.

List of Subjects in 27 CFR Part 9

Wine.

Proposed Regulatory Amendment

For the reasons discussed in the preamble, we propose to amend title 27, chapter I, part 9, Code of Federal Regulations, as follows:

PART 9—AMERICAN VITICULTURAL AREAS

1. The authority citation for part 9 continues to read as follows:

Authority: 27 U.S.C. 205.

Subpart C—Approved American Viticultural Areas

2. Subpart C is amended by adding § 9.____ to read as follows:

§ 9.____ Leona Valley.

(a) *Name*. The name of the viticultural area described in this section is ''Leona Valley''. For purposes of part 4 of this chapter, ''Leona Valley'' is a term of viticultural significance.

(b) *Approved maps*. The four United States Geological Survey 1:24,000 scale topographic maps used to determine the boundary of the Leona Valley viticultural area are titled:

(1) Ritter Ridge, Calif., 1958; Photorevised 1974;

(2) Sleepy Valley, CA, 1995;

(3) Del Sur, CA, 1995; and

(4) Lake Hughes, CA, 1995.

(c) *Boundary*. The Leona Valley viticultural area is located in Los Angeles County, California. The boundary of the Leona Valley viticultural area is as described below:

(1) From the beginning point on the Ritter Ridge map at the intersection of Elizabeth Lake Pine Canyon Road and the section 23 east boundary line, T6N, R13W, proceed along the section 23 east boundary line approximately 0.1 mile straight south to its intersection with the 3,000-foot elevation line, T6N, R13W; then

(2) Proceed west along the 3,000-foot elevation line to its intersection with the section 23 west boundary line, T6N, R13W; then

(3) Proceed south along the section 23 west boundary line to the southwest corner of section 23 at the 3,616-foot marked elevation point, T6N, R13W; then

(4) Proceed west along the section 22 south boundary line, crossing onto the Sleepy Valley map, and continuing along the section 21 south boundary line, crossing over Pine Creek, to its intersection with the 3,400-foot elevation line, T6N, R13W; then

(5) Proceed west along the 3,400-foot elevation line to its intersection with the section 19 south boundary line and Bouquet Canyon Road, T6N, R13W; then

(6) Proceed straight west along the section 19 south boundary line to its intersection with the 3,560-foot elevation line, an unimproved road, and a power transmission line, north of Lincoln Crest, T6N, R13W; then

(7) Proceed northeast along the 3,560-foot elevation line across section 19 to its east boundary line, T6N, R13W; then

(8) Proceed in a straight line north-northwest approximately 0.25 miles to its intersection with a trail and the 3,800-foot elevation line, T6N, R13W; then

(9) Proceed northwest along the meandering 3,800-foot elevation line through section 19 to its intersection with the section 13 southeast corner, T6N, R14W; then

(10) Proceed straight west, followed by straight north, along the marked Angeles National Forest border to the section 11 southeast corner: then

(11) Proceed straight north along the section 11 east boundary line to its intersection with the 3,400-foot elevation line south of an unimproved road, T6N, R14W; then

(12) Proceed generally northwest along the 3,400-foot elevation line through section 11, crossing onto the Del Sur map, to its intersection with the section 3 southeast corner, T6N, R14W; then

(13) Proceed straight west to the section 4 southeast corner, T6N, R14W; then

(14) Proceed straight north along the section 4 east boundary line approximately 0.05 mile to its intersection with the 3,600-foot elevation line, T6N, R14W; then

(15) Proceed northwest along the 3,600-foot elevation line, through section 4 and crossing onto the Lake Hughes map, to its intersection with the Angeles National Forest border and the section 4 western boundary line, T6N, R14W; then

(16) Proceed straight north along the section 4 western boundary line to its intersection with BM 3402, south of Andrade Corner, T7N, R14W; then

(17) Proceed in a line straight northeast, crossing onto the Del Sur map, to its intersection with the marked 3,552-foot elevation point, section 33, T7N, R14W; then

(18) Proceed in a line straight east-southeast to its intersection with the marked 3,581-foot elevation point, and continue in a straight line east-southeast to its intersection with the marked 3,637-foot elevation point, T6N, R14W; then

(19) Proceed in a line straight northeast to its intersection with the section 2 northwest corner, T6N, R14W; then

(20) Proceed straight east along the section 2 north boundary line 0.35 mile to its intersection with the 3,600-foot elevation line, T6N, R14W; then

(21) Proceed north and then generally southeast along the 3,600-foot elevation line that runs parallel to and south of the Portal Ridge to the elevation line's intersection with the section 7 east boundary line, T6N, R13W; then

(22) Proceed straight south along the section 7 east boundary line, crossing onto the Sleepy Valley map, to its intersection with the 3,400-foot elevation line north of the terminus of 90th Street, T6N, R13W; then

(23) Proceed generally east-southeast along the 3,400-foot elevation line that runs north of the San Andreas Rift Zone to its intersection with the section 16 east boundary line, T6N, R13W; then

(24) Proceed straight south along the section 16 east boundary line to its intersection with the 3,000-foot elevation line, between Goode Hill Road and Elizabeth Lake Pine Canyon Road, T6N, R13W; then

(25) Proceed generally southeast along the 3,000-foot elevation line, crossing onto the Ritter Ridge map, to its intersection with the section 23 east boundary line, north of the intermittent Amargosa Creek and Elizabeth Lake Pine Canyon Road, T6N, R13W; then

(26) Proceed straight south along the section 23 east boundary line to the beginning point.

Signed: November 5, 2007.

John J. Manfreda,

Administrator.

[FR Doc. E7–22697 Filed 11–20–07; 8:45 am]

BILLING CODE 4810–31–P

FEDERAL MINE SAFETY AND HEALTH REVIEW COMMISSION

29 CFR Part 2702

Freedom of Information Act Procedural Rules

AGENCY: Federal Mine Safety and Health Review Commission.

ACTION: Proposed rule; reopening of comment period.

SUMMARY: The Federal Mine Safety and Health Review Commission (the ''Commission'') previously published, on October 17, 2007, proposed revisions to its rules implementing the Freedom of Information Act (''FOIA''). The period for comments to the proposed rules ended on November 16, 2007. A request was made that the comment period be reopened and the Commission has agreed to do so.

DATE: Comments must be submitted on or before November 30, 2007.

ADDRESSES: Comments and questions may be mailed to Michael A. McCord, General Counsel, Office of the General Counsel, Federal Mine Safety and Health Review Commission, 601 New Jersey Avenue, NW., Suite 9500, Washington, DC 20001, or sent via facsimile to 202–434–9944.

FOR FURTHER INFORMATION CONTACT: Michael A. McCord, General Counsel, Office of the General Counsel, 601 New Jersey Avenue, NW., Suite 9500, Washington, DC 20001; telephone 202–434–9935; fax 202–434–9944.

SUPPLEMENTARY INFORMATION: On October 17, 2007, the Commission published revisions to its rules implementing the FOIA. 72 FR 58790. The comment period ended on November 16, 2007. The Commission received a request that the comment period be reopened. Recognizing that the Commission's rules implementing the FOIA impact the public, the Commission has agreed to reopen the comment period in order to extend the opportunity of the interested public to express any comments on the proposed rules. Comments on the proposed rules must be submitted on or before November 30, 2007.

Dated: November 16, 2007.

Michael F. Duffy,

Chairman, Federal Mine Safety and Health Review Commission.

[FR Doc. E7–22792 Filed 11–20–07; 8:45 am]

BILLING CODE 6735–01–P

ENVIRONMENTAL PROTECTION AGENCY

40 CFR Part 52

[EPA–R01–OAR–2006–0704; A–1–FRL–8491–9]

Approval and Promulgation of Air Quality Implementation Plans; Maine; Emission Statements Reporting and Definitions

AGENCY: Environmental Protection Agency (EPA).

ACTION: Proposed rule.

SUMMARY: The EPA is proposing to approve State Implementation Plan (SIP) revisions submitted by the State of Maine. These revisions update Maine's criteria pollutant emissions reporting program, and list of terms and associated definitions used in Maine's air pollution control regulations. The intended effect of this action is to propose approval of these items into the Maine SIP. This action is being taken under the Clean Air Act.

DATES: Written comments must be received on or before December 21, 2007.

ADDRESSES: Submit your comments, identified by Docket ID No. EPA–R01–OAR–2006–0704 by one of the following methods:

1. *http://www.regulations.gov:* Follow the on-line instructions for submitting comments.
2. *E-mail: arnold.anne@epa.gov.*
3. *Fax:* (617) 918–0047.
4. *Mail:* EPA–R01–OAR–2006–0704, Anne Arnold, U.S. Environmental Protection Agency, EPA New England Regional Office, One Congress Street, Suite 1100 (mail code CAQ), Boston, MA 02114–2023.
5. *Hand Delivery or Courier:* Deliver your comments to: Anne Arnold, Manager, Air Quality Planning Unit, Office of Ecosystem Protection, U.S. Environmental Protection Agency, EPA New England Regional Office, One Congress Street, 11th floor, (CAQ), Boston, MA 02114–2023. Such deliveries are only accepted during the Regional Office's normal hours of operation. The Regional Office's official hours of business are Monday through Friday, 8:30 to 4:30, excluding legal holidays.

Please see the direct final rule which is located in the Rules Section of this **Federal Register** for detailed instructions on how to submit comments.

FOR FURTHER INFORMATION CONTACT: Bob McConnell, Air Quality Planning Unit, EPA New England Regional Office, One Congress Street, Suite 1100–CAQ, Boston, MA 02114–2023, telephone number 617–918–1046, fax number 617–918–0046, e-mail *mcconnell.robert@epa.gov.*

SUPPLEMENTARY INFORMATION: In the Final Rules Section of this **Federal Register**, EPA is approving the State's SIP submittals as a direct final rule without prior proposal because the Agency views them as noncontroversial and anticipates no adverse comments. A detailed rationale for the approval is set forth in the direct final rule. If no adverse comments are received in response to this action, no further activity is contemplated. If EPA receives adverse comments, the direct final rule will be withdrawn and all public comments received will be addressed in a subsequent final rule based on this proposed rule. EPA will not institute a second comment period. Any parties interested in commenting on this action should do so at this time. Please note that if EPA receives adverse comment on an amendment, paragraph, or section of this rule and if that provision may be severed from the remainder of the rule, EPA may adopt as final those provisions of the rule that are not the subject of an adverse comment.

For additional information, see the direct final rule which is located in the Rules Section of this **Federal Register**.

Dated: October 25, 2007.

Robert W. Varney,

Regional Administrator, EPA New England.

[FR Doc. E7–22599 Filed 11–20–07; 8:45 am]

BILLING CODE 6560–50–P

FEDERAL COMMUNICATIONS COMMISSION

47 CFR Parts 2, 20, 68

[WT Docket No. 07–250; FCC 07–192]

Amendment of the Commission's Rules Governing Hearing Aid-Compatible Mobile Handsets, Petition of American National Standards Institute Accredited Standards Committee C63 (EMC) ANSI ASC C63™

AGENCY: Federal Communications Commission.

ACTION: Proposed rule.

SUMMARY: Consistent with recommendations from Commission staff in a report (Staff Report), the Federal Communications Commission (Commission) seeks comment on various possible revisions to its hearing aid compatibility policies and requirements pertaining to wireless services, including several tentative conclusions to modify § 20.19 and other requirements along the framework proposed in a consensus plan (Joint Consensus Plan) recently developed jointly by industry and representatives for the deaf and hard of hearing community. In light of the current marketplace and in anticipation of future developments in wireless offerings, the Commission takes steps to ensure that hearing aid users will continue to benefit from the convenience and features offered by the newest wireless communications systems being provided to American consumers. To the extent people who use hearing aids have difficulty finding a wireless mobile telephone that functions effectively with those devices because of interference or compatibility problems, the Commission states that a continued expansion in the number and availability of hearing aid-compatible wireless telephones is warranted.

DATES: Comments due on or before December 21, 2007. Reply comments are due on or before January 7, 2008.

ADDRESSES: You may submit comments, identified by WT Docket No. 07–250, by any of the following methods:

- *Federal eRulemaking Portal: http://www.regulations.gov.* Follow the instructions for submitting comments.
- *Federal Communications Commission's Web Site: http://www.fcc.gov/cgb/ecfs/.* Follow the instructions for submitting comments.
- *E-mail: ecfs@fcc.gov,* and include the following words in the body of the message, ''get form.'' A sample form and directions will be sent in response.
- *Mail:* Federal Communications Commission, 445 12th Street, SW., Washington, DC 20554.
- *Hand Delivery/Courier:* 236 Massachusetts Avenue, NE., Suite 110, Washington, DC 20002.
- *Accessible Formats:* Contact the FCC to request reasonable accommodations (accessible format documents, sign language interpreters, CART, etc.) for filing comments either by e-mail: *FCC504@fcc.gov* or phone: 202–418–0530 or TTY: 202–418–0432.

Instructions: All submissions received must include the agency name and docket number for this rulemaking. All comments received will be posted without change to *http://www.fcc.gov/cgb/ecfs* including any personal information provided.

FOR FURTHER INFORMATION CONTACT: Michael Rowan, Spectrum & Competition Policy Division, Wireless Telecommunications Bureau, Federal Communications Commission, 445 12th Street, SW., Portals I, Room 6603, Washington, DC 20554; or Thomas McCudden, Spectrum & Competition Policy Division, Wireless Telecommunications Bureau, Federal Communications Commission, 445 12th Street, SW., Portals I, Room 6118, Washington, DC 20554.

SUPPLEMENTARY INFORMATION: This is a summary of the Commission's *Notice of Proposed Rulemaking (NPRM)* in WT Docket No. 07–250 released November 7, 2007. The complete text of the *NPRM* is available for public inspection and copying from 8 a.m. to 4:30 p.m. Monday through Thursday or from 8 a.m. to 11:30 a.m. on Friday at the FCC Reference Information Center, Portals II, 445 12th Street, SW., Room CY–A257, Washington, DC 20554. [The *NPRM* may also be purchased from the Commission's duplicating contractor, Best Copy and Printing, Inc. (BCPI), Portals II, 445 12th Street, SW., Room CY–B402, Washington, DC 20554, telephone 202–488–5300, facsimile 202–488–5563, or you may contact BCPI at its Web site: *http://www.BCPIWEB.com.* When ordering documents from BCPI please provide the appropriate FCC document number, FCC 07–250. The *NPRM* is also available on the Internet at the Commission's Web site through its Electronic Document Management System (EDOCS): *http://hraunfoss.fcc.gov/edocs_public/Silver Stream/Pages/edocs.html.*

Initial Paperwork Reduction Act of 1995 Analysis: This document contains proposed information collection requirements. The Commission, as part of its continuing effort to reduce paperwork burdens, invites the general public and the Office of Management and Budget (OMB) to comment on the information collection requirements contained in this document, as required by the Paperwork Reduction Act (PRA) of 1995, Pub. L. 104–13. Public and agency comments are due on or before January 22, 2008. Comments should address: (a) Whether the proposed collection of information is necessary for the proper performance of the functions of the Commission, including whether the information shall have practical utility; (b) the accuracy of the Commission's burden estimates; (c) ways to enhance the quality, utility, and clarity of the information collected; and (d) ways to minimize the burden of the collection of information on the respondents, including the use of automated collection techniques or other forms of information technology. In addition, pursuant to the Small Business Paperwork Relief Act of 2002, Pub. L. 107–198 (see 44 U.S.C. 3506(c)(4)), the Commission seeks specific comment on how it might ''further reduce the information collection burden for small business concerns with fewer than 25 employees.'' The Commission notes, however, that § 213 of the Consolidated Appropriations Act 2000, Pub. L. 106–113, provides that rules governing frequencies in the 746–806 MHz Band become effective immediately upon publication in the **Federal Register** without regard to certain sections of the Paperwork Reduction Act. The Commission is therefore not inviting comment on any information collections that concern frequencies in the 746–806 MHz Band.

To view a copy of this information collection request (ICR) submitted to OMB: (1) Go to the web page *http://www.reginfo.gov/public/do/PRAMain,* (2) look for the section of the web page called ''Currently Under Review,'' (3) click on the downward-pointing arrow in the ''Select Agency'' box below the ''Currently Under Review'' heading, (4) select ''Federal Communications Commission'' from the list of agencies presented in the ''Select Agency'' box, (5) click the ''Submit'' button to the right of the ''Select Agency'' box, (6) when the list of FCC ICRs currently under review appears, look for the title of this ICR (or its OMB control number, if there is one) and then click on the ICR Reference Number to view detailed information about this ICR.''

For additional information or copies of the information collection(s), contact Cathy Williams at (202) 418–2918.

Please send your PRA comments to Nicholas A. Fraser, Office of Management and Budget, via Internet at *Nicholas_A._Fraser@omb.eop.gov* or via fax at (202) 395–5167 and to Cathy Williams, Federal Communications Commission, Room 1–C823, 445 12th Street, SW., Washington, DC or via Internet at *Cathy.Williams@fcc.gov.*

The proposed information collection requirements that the Commission seeks public comment on are as follows:

OMB Control No.: 3060–0999.

Title: Section 20.19, Hearing Aid Compatible Mobile Handsets (Hearing Aid Compatibility Act).

Form Number: Not applicable.

Type of Review: Revision of a currently approved collection.

Respondents: Business or other for-profit.

Estimated Number of Respondents: 925.

Estimated Time per Response: 3 hours—160 hours.

Frequency of Response: Annual reporting requirement; Third party requirement.

Estimated Total Annual Burden: 6,975 hours.

Estimated Total Annual Costs: None.

Nature of Response: Mandatory.

Nature and Extent of Confidentiality: There is no need for confidentiality with this information collection.

Privacy Act Impact Assessment: No impact(s).

Needs and Usage: On November 7, 2007, the Commission released WT Docket No. 07–250; FCC 07–192. Commission rules require digital wireless phone manufacturers and service providers to make available a certain number of digital wireless phones that meet specific performance levels set forth in an established technical standard. The phones must be made available according to an implementation schedule specified in Commission rules. To monitor the progress of implementation, it is proposed that digital phone manufacturers and service providers submit reports annually from 2008 through 2012. These parties currently submit reports to the Commission; however, the Commission is proposing to revise the reporting criteria for these parties.

The Commission proposes to require that manufactures include in their reports to the Commission the following information: digital wireless phones tested; Compliant phone models using the FCC ID number and ratings according to C63.19; status of product labeling; outreach efforts; total numbers of compliant phone models offered as of the time of the report; and information pertaining to product refresh. The Commission is proposing that service providers include in their reports the following information: compliant phone models using the FCC ID number and ratings according to C63.19; status of product labeling; outreach efforts; information related to the retail availability of compliant phones; total numbers of compliant and non-compliant phone models offered as of the time of the report; and the ''tiers'' into which the compliant phones fall.

In addition to these criteria, the Commission proposes to require both manufacturers and service providers to provide the model number and FCC ID directly associated with each model that they are reporting as compatible, together with the ''M'' and ''T'' rating that each such model has been certified as achieving under the ANSI C63.19 standard. The Commission further proposes to require that these reports include the air interface(s) and frequency band(s) over which each compatible model operates.

The Commission is seeking OMB approval for the revised proposed reporting criteria, if adopted by the Commission, the reports will be submitted annually by digital phone manufacturers and services provider through 2012.

I. Introduction

1. In this *NPRM,* the Commission takes steps to ensure that hearing aid users will continue to benefit from the convenience and features offered by the newest wireless communications systems being provided to American consumers. The actions proposed by the Commission are designed to take account of an evolving marketplace of new technologies and services. The proposals set forth in this *NPRM* draw upon recommendations proposed in the Staff Report. Several of these proposals, in turn, are based on an interconnected set of rule changes set forth in the Joint Consensus Plan recently developed jointly by industry and representatives for the deaf and hard of hearing community. The specifics of the Joint Consensus Plan, along with a proposed model rule, are contained in the Supplemental Comments of the Alliance for Telecommunications Industry Solutions (ATIS). ATIS states that its working group developed this comprehensive plan reflecting the joint input of the wireless industry and consumers with hearing loss. In a separate petition, American National Standards Institute (ANSI) supports the adoption of an updated technical standard as proposed in the Joint Consensus Plan, and it states that the new standard includes further improvements that reflect changes in technology, and efficiencies and improvements in testing procedures.

II. Discussion

2. In the *NPRM,* the Commission seeks comment on recommendations in the Staff Report and on the various proposals set forth in the Joint Consensus Plan. The Commission makes a number of tentative conclusions based on the broad consensus established by those participating in the development of the Joint Consensus Plan. In the context of several of these tentative conclusions, the Commission requests comment regarding the appropriate deployment regime for Tier II/III carriers and other service providers that are not Tier I carriers, which generally were not included within the Joint Consensus Plan's framework. The Commission requests that manufacturers and service providers be as specific as possible regarding the impact of these proposals on their operations, and that any alternative proposals be supported by evidence as to their feasibility and effectiveness. Affected consumers, including those with hearing difficulties, should support any new proposals with explanations of not only the benefits but also the costs to service providers, manufacturers, or other consumers, and why such costs are outweighed by the benefits. The Joint Consensus Plan contains many interrelated provisions, and the Commission notes the emphasis that its proponents place on adopting the plan as a whole in order to maintain the balance achieved during negotiations by its various member participants.

3. *Requirements and Deadlines for Hearing Aid-Compatible Handset Deployment.*

4. The Commission seeks comment on a set of new requirements for manufacturers and certain carriers as they deploy hearing aid-compatible handsets in the years to come. The first proposal in the Joint Consensus Plan is to modify several deployment deadlines as set forth in § 20.19 of the Commission's rules, 47 CFR 20.19, including the requirement that manufacturers and wireless service providers ensure that, by February 18, 2008, at least 50 percent of their handset models over each air interface offered meet an M3 or better rating for RF interference reduction, as specified in ANSI Standard C63.19, as well as the requirements for deployment of handsets that meet a T3 rating for inductive coupling capability under the same standard. In this context, the plan also proposes new ''product refresh'' and ''multiple tier'' requirements in order to ensure people with hearing loss have access to new, advanced devices.

5. *Deployment Benchmarks and Deadlines.* The Commission seeks comment on tentative conclusions to adopt new hearing aid-compatible handset deployment benchmarks for manufacturers and service providers between 2008 and 2011, consistent with those recommended in the Staff Report and proposed as part of the Joint Consensus Plan. These include proposals (1) to modify requirements currently in effect for February 18, 2008, and establish future requirements to provide handsets that incorporate reduced RF interference in recognition of technology and market obstacles currently faced by manufacturers and

service providers, and (2) to provide more options to consumers with severe hearing loss by imposing additional requirements on both service providers and manufacturers to make handsets available that are compatible with hearing aids operating in the telecoil mode. In addition to seeking comment on the recommendations and proposals in the Joint Consensus Plan, the Commission asks commenters to address specifically questions raised in the Staff Report, including those concerning appropriate benchmarks and deadlines to apply to service providers other than Tier I carriers, and those concerning whether staggering of deadlines between manufacturers and service providers is appropriate.

6. *M3- and T3-Rated Benchmarks/Deadlines.* Section 20.19(c) and (d) of the Commission's rules contains the current deadlines for deployment of public mobile radio service handset models that meet both the M3 (or higher) and T3 (or higher) ratings for compatibility with hearing aids. The Commission seeks comment on modifying these provisions consistent with the proposals in the Joint Consensus Plan, both by adopting reduced and alternative benchmarks for deploying handsets compatible with hearing aids operating in acoustic coupling (also known as microphone) mode and by increasing future benchmarks for compatibility with hearing aids operating in inductive coupling (also known as telecoil) mode.

7. With respect to acoustic coupling compatibility, in recognition of marketplace and technical realities, the Commission seeks comment on a tentative conclusion to adopt a lower threshold for equipment manufacturers to deploy M3-rated (or higher) handsets. In place of the current requirement that 50 percent of handset models per air interface meet hearing aid compatibility standards by February 18, 2008, the Commission proposes that manufacturers be obligated, for each air interface for which they offer handsets, to meet the requirement, as proposed in the Joint Consensus Plan, of 33% of manufacturers' non-*de minimis* portfolio models offered to service providers in the United States. Thus, for example, if a manufacturer produces a total of 12 models capable of operating over the GSM air interface (regardless of whether these are single-mode or multi-mode models), at least four of those models would have to meet an M3 or higher rating. Moreover, a multi-mode handset could not be counted as compatible over any air interface unless it is compatible in all air interfaces over which it operates.

8. The Commission notes that technological issues make it difficult to produce a wide variety of Global System for Mobile Communications (GSM) handsets that both meet the M3 standard for reduced RF interference for acoustic coupling and include certain popular features, and the Commission seeks to promulgate rules that are as technology-impartial as possible. The Commission tentatively concludes that, in context with the other proposals in the Joint Consensus Plan, these reduced thresholds strike an appropriate balance between maintaining technological neutrality and ensuring availability of hearing aid-compatible handsets to affected consumers. The Commission asks whether differences, in terms of the nature of the signals emitted and burdens of the formulae used to calculate compliance ratings under the ANSI technical standard, support its tentative conclusion and justify this lower benchmark. The Commission asks whether either the GSM or Code Division Multiple Access (CDMA) air interface have an advantage over the other in terms of rule compliance. The Commission asks whether any impacts to hard of hearing consumers due to the production of fewer numbers of compatible handset models would be offset by the requirement that manufacturers regularly include new compatible models in their product lines.

9. For Tier I (nationwide) carriers, the Commission seeks comment on a tentative conclusion to adopt an alternative schedule to the 50 percent M3-rated (or higher) February 18, 2008 deployment deadline. These carriers would have the choice of complying with either the current rule or a new schedule based on total numbers of compliant handset models. This schedule would create obligations for service providers to provide an increasing number of handset models per air interface over which they offer service by future dates as follows: *February 18, 2008:* eight M3-rated (or higher) handset models; *February 18, 2009:* nine M3-rated (or higher) handset models; *February 18, 2010:* ten M3-rated (or higher) handset models. The Commission seeks comment on its tentative conclusion to modify the rule as proposed.

10. Along with these proposals to modify the deployment requirements regarding reduced RF interference for acoustic coupling compatibility, the Commission also seeks comment on a tentative conclusion to increase the benchmarks for manufacturers' and Tier I carriers' deployment of handsets meeting a T3 (or higher) rating for inductive coupling capability. Because customers' options for handsets that enable inductive coupling with telecoils have been more limited than for acoustic coupling compatibility, additional requirements of this nature could benefit some of the most disadvantaged wireless users in the deaf and hard of hearing community, who are more likely to rely on telecoil-equipped hearing aids. Under its proposed rule changes, the Commission would now require manufacturers to meet the greater of two measures for each air interface for which they offer handsets in 2009 through 2011, as follows: a minimum of two T3-rated (or higher) models for each air interface for which the manufacturer offers four or more handset models to service providers; or at least 20%/25%/33% of models that the manufacturer offers over each air interface rated T3 (or higher) by February 18, 2009/2010/2011 respectively. As proposed, these percentage calculations would be rounded down to the nearest whole number in determining the minimum number of handsets to be produced. In addition, the Commission notes that each non-*de minimis* manufacturer would still be required to produce at least two or more T3-rated (or higher) handsets per air interface for which it offers handsets.

11. Service providers are currently not required to deploy additional T3-rated (or higher) handset models once they have met the September 18, 2006 deadline for offering two compliant handset models per air interface. Under its proposed rule changes, the Commission would now require Tier I carriers to meet the lesser of the following requirements for each air interface over which they offer service: (1) *February 18, 2008:* 33% of digital wireless handset models are T3-rated (or higher); or (2) a schedule as follows: *February 18, 2008:* three T3-rated (or higher) handsets; *February 18, 2009:* five T3-rated (or higher) handsets; *February 18, 2010:* seven T3-rated (or higher) handsets; and F*ebruary 18, 2011:* Ten T3-rated (or higher) handsets. The Commission tentatively concludes that these increased requirements for deployment of T3-rated (or higher) handsets are necessary and appropriate for both manufacturers and Tier I carriers. The Commission seeks comment on its tentative conclusion. The Commission also seeks comment on any additional deadlines or deployment milestones that may be appropriate to adopt at this time, such as any future M4 or T4 handset compliance requirements.

12. *Service Providers Other than Tier I Carriers.* As explained in the Staff Report, the Joint Consensus Plan is silent with respect to service providers that are not Tier I carriers. Accordingly, the Commission seeks comment generally on the appropriate deployment regime for these wireless service providers. As a general matter, in order to make the benefits of compatible handsets available to all consumers who need them, all service providers should be expected to meet the same benchmarks unless they cannot reasonably do so. At the same time, the Commission notes that in the past numerous Tier II and Tier III carriers have requested, and many have been granted, extension of compatible handset deployment deadlines because they were unable timely to obtain compliant handsets in sufficient quantities from manufacturers. The Commission therefore asks commenters to address whether there is anything inherent in the characteristics of Tier II and Tier III carriers, resellers, and mobile virtual network operators (MVNOs), or other categories of smaller service providers, that would prevent them from meeting either the RF interference reduction or inductive coupling-capable handset numbers and percentages set out for Tier I carriers.

13. *Staggered Deadlines for Deployment.* The Commission also specifically seeks comment on whether, with respect to offering compliant handsets, the Commission should require different, staggered deployment deadlines for manufacturers and service providers, such as whether manufacturers should be required to offer compliant handsets at some time prior to all service providers, or to some subset of smaller providers. The Commission notes that many Tier II and Tier III carriers have requested waivers of hearing aid compatibility deadlines, complaining among other things that manufacturers have not made compliant handsets available sufficiently in advance of the deadline so that these service providers could, in turn, make them available to consumers. Instituting a short interval between the manufacturers' and some or all service providers' deadlines might be appropriate to address the circumstances that have engendered these waiver requests. Because of market realities, Tier II and Tier III carriers may have more difficulty than Tier I carriers in obtaining handsets. The Commission notes that the Joint Consensus Plan does not request any staggered deadlines for Tier I carriers. The Commission asks commenters to address specifically whether staggering of deadlines is appropriate in the context of its proposed future hearing aid compatibility requirements, and if so, for how long and for what subset of service providers.

14. *New Requirements for Handset Deployment.* The Commission proposes, in accord with the Staff Report and the Joint Consensus Plan, additional specific measures to ensure that such a range of compatible handset models will be available so that consumers will have access to hearing aid-compatible handsets with the newest features, as well as more economical models.

15. The Commission tentatively concludes that its rules should require equipment manufacturers to meet a ''product refresh'' requirement, as recommended in the Staff Report and described in the Joint Consensus Plan. This proposal would mandate that manufacturers meet RF interference reduction thresholds for acoustic coupling compatibility in some of their new models each year, enough so that, for manufacturers offering four or more handsets using a given air interface, half of the minimum required number of M3-rated or higher handset models would be new models introduced during the calendar year. To make this calculation, the number of new compliant models to be produced would be 50 percent of the total required number of compliant models, rounded up to the nearest whole number. For manufacturers that produce three total M3-rated models per air interface, at least one new M3-rated (or higher) model shall be introduced every other calendar year. If a manufacturer is not introducing a new model in a calendar year, then under the proposed rule it would not be required to refresh its list of compliant handsets.

16. Notwithstanding its tentative conclusion, the Commission seeks comment on whether this requirement should be modified in any way. For example, it asks whether there are any modifications that would better promote hard of hearing individuals' access to new handset models without causing undue costs to other parties. The Commission also asks whether the proposed ''product refresh'' requirement would sufficiently ensure that, over time, compatible phones become available across all frequency bands as standards are promulgated and equipment is rolled out. The Commission also solicits comment on whether there are any possible less burdensome or intrusive approaches or incentives that would enable the deaf and hard of hearing community to select fresh models on a regular basis. For any proposal, the Commission asks commenters to address the disadvantages of deviating from the standard proposed under the Joint Consensus Plan. Finally, the Commission seeks comment on any implementation issues, such as reporting requirements that may be necessary with regard to these obligations, and any enforcement issues.

17. In addition to a ''product refresh'' rule for manufacturers, the Commission tentatively concludes that its hearing aid compatibility rules should require Tier I carriers to offer to consumers hearing aid-compatible handsets with different levels of functionality. As described in the Staff Report, a proposed requirement set forth in the Joint Consensus Plan would obligate Tier I carriers to offer handset models from ''multiple tiers,'' and include a concomitant requirement that these providers' reports include information on the carriers' implementation of tiering. In the context of the language in the Joint Consensus Plan stating carriers will self-define their tiers, the Commission interprets the term ''tiers'' to refer to levels of functionality. The Commission further intends functionality to include the extent to which a handset model has the capability to operate over multiple frequency bands for which hearing aid compatibility standards have been established. The Commission seeks comment on a tentative conclusion to require Tier I carriers to provide access to handsets with different levels of functionality. If commenters support this tentative conclusion, the Commission asks them to specifically address how such an obligation might be effectively implemented and enforced in its rules.

18. *2007 ANSI C63.19 Technical Standard.*

19. The Commission seeks comment on changing the current hearing aid compatibility technical standard codified in § 20.19(b) of the Commission's rules, 47 CFR 20.19(b). It seeks comment on a tentative conclusion to change the current practice permitting use of multiple versions of ANSI C63.19 and, instead, codify a single 2007 version of the testing standard. ANSI C63.19–2007, an updated version of the technical standard for determining hearing aid compatibility, has been recently approved by the Accredited Standards Committee on Electromagnetic Compatibility, C63™ and adopted by ANSI. Under the Commission's proposal, this new 2007 standard would replace the 2001, 2005 draft, and 2006 versions of the technical standard. The

Commission explains that it would retain the current practice of permitting the Chief of Wireless Telecommunications Bureau (WTB), in coordination with the Chief of Office of Engineering & Technology (OET), on delegated authority, to approve use of future versions of the standard, including multiple alternative versions, to the extent that the changes do not raise major compliance issues.

20. ANSI filed a petition this year requesting that the Commission adopt this 2007 revision of the ANSI C63.19 technical standard as the permanent standard. ANSI states in its petition that further improvements have been made to the technical standard to reflect changes in technology, and efficiencies and improvements in testing procedures. Because the standard that has been adopted by ANSI is stricter in some respects than prior versions, and is the result of broad participation from diverse groups, the Commission proposes that the standard be codified in its rules in order to better promote the development of hearing aid-compatible handsets that hearing-impaired consumers can readily use. Commenters should address whether they support such a rule change, and if not, identify an acceptable alternative to its tentative conclusion.

21. The Commission also seeks comment on a tentative conclusion to phase in the 2007 standard. Under this proposal, the Commission would permit both the 2006 and 2007 versions of the standard to be used for new RF interference and inductive coupling hearing aid compatibility certifications through 2009. A newly-certified handset would therefore have to meet, at minimum, an M3 or T3 rating as set forth in either the 2006 or 2007 revision of the ANSI C63.19 standard to be considered compatible, while grants of equipment authorization previously issued under other versions of the standard would remain valid for hearing aid compatibility purposes. Then, beginning on January 1, 2010, the Commission would only permit use of the 2007 version of the standard for obtaining new grants of equipment authorization, while continuing to recognize the validity of existing grants under previous versions of the standard. The Commission seeks comment on whether this two step phase-in period appropriately balances the interests in bringing state-of-the-art compatible handsets to hard of hearing consumers and in avoiding unreasonable burdens on manufacturers and service providers. It also asks commenters to consider whether there are alternative implementations of the 2007 standard that would better serve these goals.

22. *Reporting Obligations, Public Information, and Outreach.*

23. The Commission seeks comment on proposed requirements relating to manufacturers' and service providers' filing of hearing aid compatibility reports with the Commission, as well as other public information and outreach measures.

24. *Reporting.* The Commission tentatively concludes not only to continue requiring service providers and manufacturers to report regularly on the availability of hearing aid-compatible products, but to enhance and improve the content of the reports that are filed. As reported in the Staff Report, there is evidence in the record that some of the information in the existing compliance reports may not be as complete or as helpful as possible for consumers, wireless service providers, or the Commission. Furthermore, staff encountered difficulties when verifying the ratings for certain handset models identified in compliance reports, because many of the compliance reports referenced the handset manufacturer and model number but did not include the associated FCC ID. In order to address these shortcomings, the Joint Consensus Plan includes proposed requirements that will render the reports more helpful to consumers and others by providing them with better information concerning the commercial availability of compliant handsets. Specifically, the Joint Consensus Plan recommends that reports include:

25. Manufacturers: digital wireless phones tested; compliant phone models using the FCC ID number and ratings according to C63.19; status of product labeling; outreach efforts; total numbers of compliant phone models offered as of the time of the report; and information pertaining to product refresh.

26. Service providers: compliant phone models using the FCC ID number and ratings according to C63.19; status of product labeling; outreach efforts; information related to the retail availability of compliant phones; total numbers of compliant and non-compliant phone models offered as of the time of the report; and the ''tiers'' into which the compliant phones fall.

27. The Commission proposes to adopt these reporting criteria and asks commenters to address whether they capture the appropriate information and level of detail. In particular, to clarify the information collection recommended in the Joint Consensus Plan, the Commission proposes to require both manufacturers and service providers to provide the model number and FCC ID directly associated with each model that they are reporting as compatible, together with the ''M'' and ''T'' rating that each such model has been certified as achieving under the ANSI C63.19 standard. The Commission would accept the manufacturer's determination of whether a device is a distinct model consistent with the manufacturer's marketing practices, so long as models that have no distinguishing variations of form, features, or user capabilities, or that only differentiate units sold to a particular carrier, are not separately counted as distinct models to customers. The Commission further proposes to require that reports include the air interface(s) and frequency band(s) over which each compatible model operates. The Commission seeks comment on these proposed additional requirements. In addition, the Commission asks whether it should vary the information sought depending on the type of service provider (e.g., Tier I carrier vs. other service provider).

28. The Commission also seeks comment on additional ways to improve the quality and usefulness of the reports, including whether the Commission should require additional information beyond that proposed in the Joint Consensus Plan. Unless commenters support another process, the Commission proposes to authorize Commission staff to develop a standardized reporting format for collecting information.

29. In addition, the Commission seeks comment regarding the schedule under which the Commission should require future reports. Under the proposal contained in the Joint Consensus Plan, the Commission would adopt a staggered schedule whereby manufacturers would be required to provide an annual status report to the Commission beginning November 30, 2007, Tier I carriers would be required to provide an annual status report to the Commission six months later beginning May 30, 2008, and Tier II and III carriers would be required to provide an annual status report beginning May 30, 2009. These reporting requirements would continue annually thereafter through the November report in 2012. The Commission seeks comment on a tentative conclusion to adopt substantially this schedule, but with certain refinements. First, given the timing of this proceeding, the Commission expects that manufacturers and service providers will be required to comply with current rules for November 2007 reporting. To the extent the Commission maintains the current November 17, 2007 reporting deadline

during the rulemaking, commenters should consider how the remaining schedule may need to be modified.

30. In addition, the Commission questions the Joint Consensus Plan proposal to adopt a delayed reporting requirement for Tier II and III carriers whereby their next reports would not be required until a year after the Tier I carriers' reports. In light of the recommendations in the Staff Report and its objectives, especially for consumers who receive service from such providers, the Commission seeks comment on whether it serves the public interest to delay their next reports for a period of 18 months to two years from their reports that will be submitted in November 2007, or whether they should instead be held to the same schedule as Tier I carriers in order to provide a steady source of information to consumers and to the Commission. Moreover, given that Tier II and III carriers have already been filing reports regularly, the Commission seeks comment on the extent of the burdens that would be avoided by postponing their first reports as proposed under the Joint Consensus Plan, balanced against the extent of information that would be lost by introducing a gap of 18 months or more in their reporting. Commenters should also address whether the reporting deadlines for Tier II and III carriers should depend on its adoption of staggered deployment deadlines. Finally, if the Commission adopts different reporting deadlines for Tier I versus Tier II and III carriers, the Commission seeks comment on the rules that should apply to resellers and to MVNOs.

31. *Public Information and Outreach.* In addition to the content and frequency of manufacturer and service provider reports, the Commission seeks comment on other ways to increase the availability of hearing aid compatibility information to consumers, service providers, and other interested parties. As explained in the Staff Report, the Commission's existing databases and websites are of limited value for these purposes. For example, although OET's equipment authorization database has information about hearing aid compatibility ratings associated with manufacturers' equipment, the database maintains such information based on FCC IDs, not handset model numbers, and it does not maintain a single clear, current record associated with each ID. Thus, it is difficult—particularly for an inexperienced user—to search for hearing aid-compatible models based either on the manufacturer's name or on the model's FCC ID. Similarly, the Disability Rights Office (DRO) of the Consumer and Government Affairs Bureau maintains a website that explains the disability access rules and provides contact information for manufacturers and service providers, but this website does not include information regarding the compatibility of particular handset models. As noted in the Staff Report, although a consumer wishing to file a complaint under § 255 of the Communications Act, 47 U.S.C. 255, can locate the designated agent's name and contact information from the Commission's website, no similar information is available under the process governing complaints for violations of hearing aid compatibility requirements. Under the hearing aid compatibility complaint process, consumers are responsible for identifying the agent designated by manufacturers or service providers for service of complaints under 47 CFR 68.418(b). The Commission notes that it extended its part 68, subpart E rules to allow consumers to file informal complaints under those rules if they find that wireless service providers or manufacturers of wireless equipment are not complying with its hearing aid compatibility rules.

32. In recognition of these shortcomings, the Commission seeks comment on potential measures to improve the value of these databases and websites for parties seeking hearing aid compatibility information, including, for example, adding a relevant search function to the equipment authorization database or adding links to manufacturers' and service providers' websites from the DRO's web page. In addition to the ongoing efforts of Commission staff to continue to improve information available to consumers, service providers, and other interested parties, the Commission seeks comment as to any specific measures the Commission should require or take, such as requiring manufacturers to include in their equipment authorization filings the handset models associated with each FCC ID number, and to update this information when they introduce new models. Also, the Commission asks whether it should adopt new part 2 rules to require a filing for permissive changes that includes trade names and model numbers. The Commission also requests comment on whether to require manufacturers and service providers subject to the Commission's hearing aid compatibility rules to follow the same procedures as those applicable to § 255 complaints, and to have the Commission publish hearing aid compatibility designated agents' contact information on the DRO website.

33. The Commission also seeks comment on how it can encourage digital wireless handset manufacturers and service providers to engage in additional outreach efforts to assist consumers with hearing disabilities as they shop for wireless phones. As recommended in the Staff Report, the Commission seeks comment on how best to promote the availability of useful hearing aid compatibility information on manufacturers' and service providers' websites, including whether the Commission should not only encourage but require the posting of such information. The Commission further seeks comment as to what requirements or guidelines, if any, it should provide regarding the content of such postings.

34. Consistent with the recommendations in the Staff Report, the Commission also seeks comment generally on any other ways that wireless manufacturers, service providers, and independent retailers can improve the effectiveness of their in-store testing, consumer education, and other consumer outreach efforts. These efforts would, ideally, include new ways of publicly identifying compliant phones for consumers and audiologists, as well as efforts that independent retailers could take to facilitate such identification. In addition, in order to assist consumers as they shop for wireless phones, the Commission also asks whether there are additional steps it can take to facilitate the flow of information between consumers, manufacturers, and service providers to meet its hearing aid compatibility outreach objectives.

35. *Other Components of Joint Consensus Plan, and Related Proposals.*

36. As recommended in the Staff Report, the Commission seeks comment on several additional proposals in the Joint Consensus Plan, as well as on matters related to those proposals.

37. Other Spectrum Bands. The Joint Consensus Plan contains a request that the Commission apply the Commission's hearing aid compatibility rules to all spectrum bands that are used for the provision of Commercial Mobile Radio Services (CMRS) in the United States, subject to standards development. The Commission determined earlier this year that all digital CMRS providers, regardless of the particular band in which they were operating, as well as manufacturers of handsets capable of providing such services, should be subject to the hearing aid compatibility requirements set forth in § 20.19 to the extent that a

service satisfies the scope provision for hearing aid compatibility set forth in its part 20 rules. The Commission seeks comment generally on whether any further action is necessary or appropriate in this regard, and in particular on several specific questions that relate to the extension of hearing aid compatibility requirements to new frequency bands. First, the Commission seeks comment on how its current hearing aid compatibility requirements apply to mobile satellite service (MSS) providers that offer CMRS and whether any revisions to the hearing aid compatibility rules are appropriate respecting such providers, in order to promote consistent treatment for all CMRS providers that offer functionally equivalent services. In this regard, the Commission asks commenters to address whether it should make a difference if an MSS provider offers service purely through a satellite-based network or through a combined network that relies on both satellite and ancillary terrestrial component (ATC) facilities.

38. Second, the Commission agrees with the recommendation in the Staff Report that standard-setting bodies should strive to develop hearing aid compatibility standards together with technical operating specifications for new frequency bands. The Commission seeks comment on any measures that the Commission should take to promote this practice.

39. Third, the Commission has held that if a handset manufacturer or service provider offers a multi-band handset in order to comply with the hearing aid compatibility requirements, the handset must be hearing aid-compatible in each frequency band over which it operates. The Commission tentatively concludes to codify this requirement in § 20.19 of the rules. The Commission further tentatively concludes, consistent with this principle, that multi-band phones should not be counted as compatible in any band if they operate over frequency bands for which technical standards have not been established. The Commission believes this limitation would conform with consumers' expectation that a phone labeled ''hearing aid compatible'' is compatible in all its operations. Treating such handsets as not compatible would also create incentives for industry bodies to develop compatibility standards for new frequency bands more quickly. The Commission seeks comment on this tentative conclusion.

40. Fourth, the Commission notes that the ANSI C63.19 standard includes target values for hearing aid compatibility validation procedures for operation over specific air interfaces at frequencies in the ranges of 800–950 MHz and 1.6–2.5 GHz. Accordingly, the Commission tentatively concludes to revise § 20.19(b), 47 CFR 20.19(b), to include services operating over any frequencies within these two bands, to the extent they employ air interfaces for which hearing aid compatibility technical standards have been established and approved by the Commission.

41. In addition, the Commission seeks comment on whether it can, and should, establish a mechanism under which hearing aid compatibility regulations would become applicable to future frequency bands as soon as, or within a defined period after, technical standards are established for relevant air interfaces. Under its current rules, the Commission must modify § 20.19 pursuant to rulemaking to add new services or new frequency bands. Amending § 20.19 so that a rule change is not necessary every time technical standards are established for new services, new air interfaces, or new frequency bands potentially would bring the benefits of compatible handsets more quickly to consumers and would provide greater certainty to all affected parties. In addition, to the extent that manufacturers and service providers are already meeting their obligations to offer defined numbers or percentages of hearing aid-compatible handsets over previously covered services, the automatic extension of its rules to additional frequency bands may not impose significant additional burdens, and may even assist manufacturers and service providers in achieving compliance by permitting them to count multi-band models as compliant. The Commission asks commenters to address both the benefits and the drawbacks of an automatic effectiveness regime, as well as what the specific rules should entail. Under existing rules, the Commission generally must approve revised versions of ANSI C63.19 for such revised standards to take effect for purposes of its hearing aid compatibility requirements. The Commission asks whether a standard should be considered ''established'' for a new frequency band upon its promulgation by C63, or whether there should be a process for the Commission or its staff to review or approve the standard, and if so what should that process be.

42. Multi-Mode Handsets. The Commission tentatively concludes to adopt the proposal in the Joint Consensus Plan stating that multi-mode handsets do not satisfy § 20.19 for any air interface unless they are compatible in all air interfaces over which they operate. The Commission further tentatively concludes, consistent with its tentative conclusion regarding multi-band handsets, that multi-mode phones should not be counted as compatible in any mode if they operate over air interfaces for which technical standards have not been established. The Commission believes this rule would conform to consumers' expectations and would help promote the rapid development of compatibility standards for new air interfaces. The Commission seeks comment on these tentative conclusions and on any other potential measures to promote the development of compatibility standards for new air interfaces together with technical operating specifications.

43. *De Minimis* Exception. The Commission adopted a *de minimis* exception, which relieves wireless service providers and handset manufacturers that offer two or fewer digital wireless handset models in the United States from the hearing aid compatibility compliance obligations. The Joint Consensus Plan proposes that the Commission retain the *de minimis* exception and clarify that it applies on a per-air interface basis. The Commission notes that it has already clarified that the *de minimis* exception applies on a per-air interface basis, rather than across a manufacturer's or carrier's entire product line. The Commission tentatively concludes that this clarification should be codified in its rules. The Commission also invite further comment on the question of whether to narrow the *de minimis* exception.

44. 2010 Further Review. The Joint Consensus Plan proposes that the Commission establish a further review of the hearing aid compatibility rules in 2010. The Commission tentatively concludes to adopt this proposal, and the Commission seeks comment. In particular, given the timing of the obligations the Commission proposes, the Commission seeks comment on whether such a review would be more appropriate at a later date, such as in 2012. The Commission states that once the proposed deployment deadlines have passed and the Commission can assess the effectiveness of any action it takes arising out of its proposals, it may decide to add new or additional obligations, or on the other hand, reduce its oversight role if the state of competition or technology supports such action.

45. Volume Controls. Consistent with the Joint Consensus Plan's recommendation, the Commission urges all interested parties to specifically look into adding volume controls to wireless

handsets. The Commission seeks comment on whether any volume control requirements should be incorporated into its rules, and if so what they should be. The Commission also invites comment on interference from handset screen displays, including whether any measures are appropriate to promote the deployment of phones that enable users to turn off their screens.

46. *Emerging Technologies.*

47. The Commission seeks comment on whether its hearing aid compatibility rules should be modified to address new technologies being used and offered by manufacturers and providers in their wireless handsets and networks. Under current Commission rules, manufacturers and service providers are required to meet the Commission's hearing aid compatibility standards only to the extent that handsets are associated with digital CMRS networks that ''offer real-time, two-way switched voice or data service that is interconnected with the public switched network and utilize an in-network switching facility that enables the provider to reuse frequencies and accomplish seamless hand-offs of subscriber calls.'' 47 CFR 20.19(a). The Commission seeks comment on whether it should extend some or a portion of the hearing aid compatibility requirements under § 20.19 to wireless handsets that may fall outside the definition of CMRS and the criteria in § 20.19(a), such as handsets that operate on unlicensed Wireless Fidelity (WiFi) networks that do not employ an in-network switching facility that enables the provider to reuse frequencies and accomplish seamless hand-offs. The Staff Report provides several examples of service providers offering access to Voice over Internet Protocol (VoIP) applications over WiFi and other wireless technologies. The Commission agrees with the recommendation in the Staff Report that the Commission should consider whether to change its rules to address these developments.

48. First, the Commission seeks comment generally on the application of its hearing aid compatibility rules to VoIP applications provided over wireless technologies such as WiFi and other emerging technologies. The Commission asks commenters to address how current and anticipated future use of VoIP applications over wireless networks, both interconnected and non-interconnected, would be treated under the interaction of the Hearing Aid Compatibility Act and its rules. 47 U.S.C. 610(b)(2). The Commission asks several questions about the scope and applicability of § 20.19(a) in these situations. Commenters suggesting changes are asked to address not only the policy reasons for their proposed revisions, but also the Commission's legal authority to adopt them.

49. In addition, the Commission solicits comment as to whether any new hearing aid compatibility rules are appropriate to address handsets that combine covered mobile voice operation with data services provided over WiFi networks or other emerging technologies. The Commission notes that such service combinations may be particularly attractive to deaf and hard of hearing consumers, but that its current rules do not necessarily require that any such handsets be hearing aid-compatible if the manufacturer and service provider satisfy their hearing aid compatibility benchmarks using other models. Elsewhere in the *NPRM*, the Commission tentatively concludes to adopt ''product refresh'' and ''tiering'' rules that are intended to ensure consumers who use hearing aids will have access to mobile handsets with a range of functionalities. The Commission seeks comment as to whether these proposed rules appropriately promote the availability of hearing aid-compatible handsets that include data services provided over WiFi networks or other emerging technologies, or whether additional measures are needed. In this regard, the Commission notes that the requirements of § 20.19 apply to handsets used with either voice or data services that fall within its terms. The Commission seeks comment as to the implications of imposing hearing aid compatibility requirements based on the provision of wireless data services, and whether this provision should be changed.

50. Finally, the Commission invites broad comment on what additional regulatory obligations may be appropriate to address the issues raised by emerging wireless technologies, taking into account the statutory goal to promote equal access to communications equipment and services for consumers with hearing loss as well as economic, technological, and legal constraints. Regulation may be appropriate when new technology causes people with hearing disabilities to lose access, but the Commission is unsure what the extent of any access problem may be and what measures may best address any such problem, and the Commission therefore invites commenters to address this question. As emerging technologies progress, the deaf and hard of hearing community should be able to benefit to a similar degree as the mainstream population, as has been its goal under § 20.19.

51. *Networks Using Open Platforms for Devices and Applications.*

52. The Commission required that licensees of the Upper 700 MHz Band C Block of spectrum provide ''open platforms'' for devices and applications to allow customers, device manufacturers, third-party application developers, and others to use the devices and applications of their choosing in C Block networks, subject to certain reasonable network management conditions that allow the licensee to protect the network from harm. An open platform network mandate, such as that for the Upper 700 MHz Band C Block of spectrum, may fundamentally alter the paradigm within which the hearing aid compatibility rules apply. As currently constituted, § 20.19 of the Commission's rules imposes hearing aid compatibility obligations only on manufacturers and providers of services within its scope, including resellers and MVNOs. With the growth of open platform networks, however, entities other than the traditional equipment manufacturers and service providers may become increasingly significant. While the existing requirements on manufacturers, together with the open platform requirements themselves, may be adequate to ensure sufficient hearing aid-compatible handset choice for consumers, the Commission seeks comment on whether any additional hearing aid compatibility requirements should be imposed in the context of open platform networks.

53. The Commission seeks comment both on whether to impose additional hearing aid compatibility requirements on manufacturers in the context of open platform networks, and on whether to extend any requirements to entities that are not currently covered. In addition, the Commission seeks comment on whether and how to extend its hearing aid compatibility requirements to the responsible manufacturing party in joint venture situations.

54. The Commission also seeks comment on whether and how to extend its hearing aid compatibility rules, including handset deployment, information, and outreach requirements, from service providers to other entities offering handsets to consumers within an open platform environment. Considering the development of open platform networks, there may be a greater need for in-store testing by independent retailers or other third parties. The Commission therefore seeks comment on whether to extend in-store testing rules to independent retailers or other third parties in the context of open

platform networks. The Commission seeks comment on the regulatory status under its current hearing aid compatibility rules of application developers and other potential new participants using open platform networks, and on whether any new hearing aid compatibility requirements should appropriately be imposed on such entities.

III. Procedural Matters

A. Regulatory Flexibility Act

55. As required by the Regulatory Flexibility Act (RFA), 5 U.S.C. 603, the Commission has prepared an Initial Regulatory Flexibility Analysis (IRFA) of the possible significant economic impact on small entities of the policies and rules addressed in this *NPRM*. The IRFA is set forth in an Appendix to the *NPRM*. Written public comments are requested on the IRFA. These comments must be filed in accordance with the same filing deadlines as comments filed in response to the *NPRM*, and must have a separate and distinct heading designating them as responses to the IRFA.

B. Initial Paperwork Reduction Act of 1995

56. This *NPRM* contains proposed information collection requirements. The Commission, as part of its continuing effort to reduce paperwork burdens, invites the general public and the Office of Management and Budget (OMB) to comment on the information collection requirements contained in this *NPRM*, as required by the Paperwork Reduction Act of 1995, Pub. L. 104–13. Public and agency comments are due on or before January 22, 2008. Comments should address: (a) Whether the proposed collection of information is necessary for the proper performance of the functions of the Commission, including whether the information shall have practical utility; (b) the accuracy of the Commission's burden estimates; (c) ways to enhance the quality, utility, and clarity of the information collected; and (d) ways to minimize the burden of the collection of information on the respondents, including the use of automated collection techniques or other forms of information technology. In addition, pursuant to the Small Business Paperwork Relief Act of 2002, Pub. L. 107–198 (see 44 U.S.C. 3506(c)(4)), the Commission seeks specific comment on how it might ''further reduce the information collection burden for small business concerns with fewer than 25 employees.'' The Commission notes, however, that § 213 of the Consolidated Appropriations Act of 2000 provides that rules governing frequencies in the 746–806 MHz Band become effective immediately upon publication in the **Federal Register** without regard to certain sections of the Paperwork Reduction Act. Consolidated Appropriations Act of 2000, Pub. L. 106–113, 113 Stat. 2502, Appendix E, Sec. 213(a)(4)(A) through (B); see 145 Cong. Rec. H12493–94 (Nov. 17, 1999); 47 U.S.C.A. 337 note at Sec. 213(a)(4)(A) through (B). The Commission is therefore not inviting comment on any information collections that concern frequencies in the 746–806 MHz Band.

C. Other Procedural Matters

1. Ex Parte Presentations

57. The rulemaking this *NPRM* initiates shall be treated as a ''permit-but-disclose'' proceeding in accordance with the Commission's *ex parte* rules. Persons making oral *ex parte* presentations are reminded that memoranda summarizing the presentations must contain summaries of the substance of the presentations and not merely a listing of the subjects discussed. More than a one or two sentence description of the views and arguments presented generally is required. Other requirements pertaining to oral and written presentations are set forth in 47 CFR 1.1206(b) of the Commission's rules.

2. Comment Filing Procedures

58. Pursuant to 47 CFR 1.415 and 1.419 of the Commission's rules, interested parties may file comments on or before December 21, 2007 and reply comments on or before January 7, 2008. All filings related to this *NPRM* should refer to WT Docket No. 07–250. Comments may be filed using: (1) The Commission's Electronic Comment Filing System (ECFS), (2) the Federal Government's eRulemaking Portal, or (3) by filing paper copies.

59. Electronic Filers: Comments may be filed electronically using the Internet by accessing the ECFS: *http://www.fcc.gov/cgb/ecfs/* or the Federal eRulemaking Portal: *http://www.regulations.gov*. Filers should follow the instructions provided on the Web site for submitting comments. ECFS filers must transmit one electronic copy of the comments for WT Docket No. 07–250. In completing the transmittal screen, filers should include their full name, U.S. Postal Service mailing address, and WT Docket No. 07–250. Parties may also submit an electronic comment by Internet e-mail. To get filing instructions, filers should send an e-mail to *ecfs@fcc.gov* and include the following words in the body of the message, ''get form.'' A sample form and directions will be sent in response.

60. Paper Filers: Parties who choose to file by paper must file an original and four copies of each filing. Filings can be sent by hand or messenger delivery, by commercial overnight courier, or by first-class or overnight U.S. Postal Service mail (although the Commission continues to experience delays in receiving U.S. Postal Service mail). All filings must be addressed to the Commission's Secretary, Marlene H. Dortch, Office of the Secretary, Federal Communications Commission. The Commission's contractor will receive hand-delivered or messenger-delivered paper filings for the Commission's Secretary at 236 Massachusetts Avenue, N.E., Suite 110, Washington, DC 20002. The filing hours at this location are 8 a.m. to 7 p.m. All hand deliveries must be held together with rubber bands or fasteners. Any envelopes must be disposed of before entering the building. Commercial overnight mail (other than U.S. Postal Service Express Mail and Priority Mail) must be sent to 9300 East Hampton Drive, Capitol Heights, MD 20743. U.S. Postal Service first-class, Express, and Priority mail should be addressed to 445 12th Street, SW., Washington, DC 20554.

3. Accessible Formats

61. To request materials in accessible formats for people with disabilities (braille, large print, electronic files, audio format), send an e-mail to *FCC504@fcc.gov* or call the Consumer & Governmental Affairs Bureau at 202–418–0530 (voice), 202–418–0432 (TTY).

IV. Initial Regulatory Flexibility Analysis

62. As required by the Regulatory Flexibility Act of 1980, as amended (RFA), the Commission has prepared this Initial Regulatory Flexibility Analysis (IRFA) of the possible significant economic impact on a substantial number of small entities by the policies and rules considered in this *NPRM*. Written public comments are requested on this IRFA. Comments must be identified as responses to the IRFA and must be filed by the deadlines for comments on the *NPRM*. The Commission will send a copy of this *NPRM*, including this IRFA, to the Chief Counsel for Advocacy of the Small Business Administration (SBA). In addition, this *NPRM* and IRFA (or summaries thereof) will be published in the **Federal Register**.

63. Section 213 of the Consolidated Appropriations Act of 2000 provides

that the RFA shall not apply to the rules and competitive bidding procedures for frequencies in the 746–806 MHz Band. In particular, this exemption extends to the requirements imposed by Chapter 6 of Title 5, United States Code, § 3 of the Small Business Act (15 U.S.C. 632) and §§ 3507 and 3512 of Title 44, United States Code. Consolidated Appropriations Act of 2000, Pub. L. 106–113, 113 Stat. 2502, Appendix E, Sec. 213(a)(4)(A) through (B); see 145 Cong. Rec. H12493–94 (Nov. 17, 1999); 47 U.S.C.A. 337 note at Sec. 213(a)(4)(A) through (B). The Commission nevertheless believes that it would serve the public interest to analyze the possible significant economic impact of the proposed policy and rule changes in this band on small entities. Accordingly, this IRFA contains an analysis of this impact in connection with all spectrum that falls within the scope of this *NPRM*, including spectrum in the 746–806 MHz Band.

A. Need for, and Objectives of, the Proposed Rules

64. In the *NPRM*, the Commission reexamines existing hearing aid compatibility requirements to ensure that they will continue to be effective in an evolving marketplace of new technologies and services. Although the *NPRM* tentatively concludes substantially to adopt new M3- and T3-rated handset deployment benchmarks through 2011, and a related requirement to offer handsets with different levels of functionality, for Tier I carriers only, it also seeks comment on the appropriate regime for smaller service providers. In addition, the *NPRM* tentatively concludes to adopt new deployment benchmarks for all manufacturers, subject to a *de minimis* exception for certain manufacturers with small product lines. Moreover, the Commission also tentatively concludes that the following steps that might affect small businesses are needed to meet its objectives: (1) Implement a ''product refresh'' rule for manufacturers; (2) adopt, after a suitable phase-in period, the use of a single version of the ANSI C63.19 standard, ANSI C63.19–2007; and (3) adopt new content and timelines for hearing aid compatibility reporting requirements. In the context of several of these tentative conclusions, the Commission requests comment on possible compliance requirements not included within the Joint Consensus Plan's framework. For example, the Commission seeks comment on the possibility of staggered handset deployment deadlines for different classes of service providers and manufacturers, additional reporting/outreach obligations, and other measures that may impact small entities. In addition, following upon the recommendations in the Staff Report, the *NPRM* invites comments on new hearing aid compatibility issues implicated by recent developments relating to provision of Voice over Internet Protocol (VoIP) over wireless platforms, as well as ''open platform'' networks. The Commission is open to comment on what, if any, requirements it should, or should not, impose for small entities if it adopts new rules based on the proposals in the *NPRM*.

65. To promote compatibility between digital wireless telephones and hearing aids, this *NPRM* could result in rule changes that, if adopted, would create new opportunities and obligations for several categories of wireless service providers, as well as manufacturers of wireless handsets. The rule changes in the *NPRM* may affect service providers and equipment manufacturers in services for which technical standards both have and have not been established. In addition, the *NPRM* requests comment on potential rule changes that may affect providers of VoIP applications over wireless technologies, as well as independent retailers and other third parties in the context of ''open platform'' networks.

66. The Commission states that ensuring the availability of hearing aid-compatible handsets to hard of hearing consumers, as well as information about such handsets, remains a high priority. To the extent people who use hearing aids have difficulty finding a wireless mobile telephone that functions effectively with those devices because of interference or compatibility problems, the Commission states that a continued expansion in the number and availability of hearing aid-compatible wireless telephones is warranted. It explains that its objective is to take account of changing market and technological conditions with appropriate new steps to ensure that hearing aid users will continue to benefit from the convenience and features offered by the newest wireless communications systems being provided to American consumers.

B. Legal Basis

67. The potential actions about which comment is sought in this *NPRM* would be authorized pursuant to the authority contained in Sections 4(i), 303(r), and 710 of the Communications Act of 1934, as amended, 47 U.S.C. 154(i), 303(r), and 610.

C. Description and Estimate of the Number of Small Entities to Which the Rules Will Apply

68. The RFA directs agencies to provide a description of, and, where feasible, an estimate of, the number of small entities that may be affected by the proposed rules, if adopted. The RFA generally defines the term ''small entity'' as having the same meaning as the terms ''small business,'' ''small organization,'' and ''small governmental jurisdiction.'' In addition, the term ''small business'' has the same meaning as the term ''small business concern'' under the Small Business Act. A ''small business concern'' is one which: (1) Is independently owned and operated; (2) is not dominant in its field of operation; and (3) satisfies any additional criteria established by the Small Business Administration (SBA). To assist the Commission in analyzing the total number of potentially affected small entities, the Commission requests commenters to estimate the number of small entities that may be affected by any rule changes that might result from this *NPRM*.

69. *Wireless Communications Services*. This service can be used for fixed, mobile, radiolocation, and digital audio broadcasting satellite uses in the 2305–2320 MHz and 2345–2360 MHz bands. The Commission defined ''small business'' for the wireless communications services (WCS) auction as an entity with average gross revenues of $40 million for each of the three preceding years, and a ''very small business'' as an entity with average gross revenues of $15 million for each of the three preceding years. The SBA has approved these definitions. The Commission auctioned geographic area licenses in the WCS service. In the auction, which commenced on April 15, 1997 and closed on April 25, 1997, there were seven bidders that won 31 licenses that qualified as very small business entities, and one bidder that won one license that qualified as a small business entity.

70. *700 MHz Guard Bands Licenses*. The Commission adopted size standards for ''small businesses'' and ''very small businesses'' for purposes of determining their eligibility for special provisions such as bidding credits and installment payments. A small business in this service is an entity that, together with its affiliates and controlling principals, has average gross revenues not exceeding $40 million for the preceding three years. Additionally, a ''very small business'' is an entity that, together with its affiliates and controlling principals, has average gross revenues that are not

more than $15 million for the preceding three years. SBA approval of these definitions is not required. An auction of 52 Major Economic Area (MEA) licenses for each of two spectrum blocks commenced on September 6, 2000, and closed on September 21, 2000. Of the 104 licenses auctioned, 96 licenses were sold to nine bidders. Five of these bidders were small businesses that won a total of 26 licenses. A second auction of remaining 700 MHz Guard Bands licenses commenced on February 13, 2001, and closed on February 21, 2001. All eight of the licenses auctioned were sold to three bidders. One of these bidders was a small business that won a total of two licenses. Subsequently, the Commission reorganized the licenses pursuant to an agreement among most of the licensees, resulting in a spectral relocation of the first set of paired spectrum block licenses, and an elimination of the second set of paired spectrum block licenses (many of which were already vacant, reclaimed by the Commission from Nextel). A single licensee that did not participate in the agreement was grandfathered in the initial spectral location for its two licenses in the second set of paired spectrum blocks. Accordingly, at this time there are 54 licenses in the 700 MHz Guard Bands.

71. *700 MHz Band Commercial Licenses.* There is 80 megahertz of non-Guard Band spectrum in the 700 MHz Band that is designated for commercial use: 698–757, 758–763, 776–787, and 788–793 MHz Bands. With one exception, the Commission adopted criteria for defining two groups of small businesses for purposes of determining their eligibility for bidding credits at auction. These two categories are: (1) ''Small business,'' which is defined as an entity that has attributed average annual gross revenues that do not exceed $15 million during the preceding three years; and (2) ''very small business,'' which is defined as an entity with attributed average annual gross revenues that do not exceed $40 million for the preceding three years. In Block C of the Lower 700 MHz Band (710–716 MHz and 740–746 MHz), which was licensed on the basis of 734 Cellular Market Areas, the Commission adopted a third criterion for determining eligibility for bidding credits: An ''entrepreneur,'' which is defined as an entity that, together with its affiliates and controlling principals, has average gross revenues that are not more than $3 million for the preceding three years. The SBA has approved these small size standards.

72. An auction of 740 licenses for Blocks C (710–716 MHz and 740–746 MHz) and D (716–722 MHz) of the Lower 700 MHz Band commenced on August 27, 2002, and closed on September 18, 2002. Of the 740 licenses available for auction, 484 licenses were sold to 102 winning bidders. Seventy-two of the winning bidders claimed small business, very small business, or entrepreneur status and won a total of 329 licenses. A second auction commenced on May 28, 2003, and closed on June 13, 2003, and included 256 licenses: five EAG licenses and 251 CMA licenses. Seventeen winning bidders claimed small or very small business status and won 60 licenses, and nine winning bidders claimed entrepreneur status and won 154 licenses.

73. The remaining 62 megahertz of commercial spectrum is currently scheduled for auction on January 24, 2008. Bidding credits for all of these licenses will be available to ''small businesses'' and ''very small businesses.''

74. *Government Transfer Bands.* The Commission adopted small business size standards for the unpaired 1390–1392 MHz, 1670–1675 MHz, and the paired 1392–1395 MHz and 1432–1435 MHz bands. Specifically, with respect to these bands, the Commission defined an entity with average annual gross revenues for the three preceding years not exceeding $40 million as a ''small business,'' and an entity with average annual gross revenues for the three preceding years not exceeding $15 million as a ''very small business.'' SBA has approved these small business size standards for the aforementioned bands. Correspondingly, the Commission adopted a bidding credit of 15 percent for ''small businesses'' and a bidding credit of 25 percent for ''very small businesses.'' This bidding credit structure was found to have been consistent with the Commission's schedule of bidding credits, which may be found at § 1.2110(f)(2) of the Commission's rules. The Commission found that these two definitions will provide a variety of businesses seeking to provide a variety of services with opportunities to participate in the auction of licenses for this spectrum and will afford such licensees, who may have varying capital costs, substantial flexibility for the provision of services. The Commission noted that it had long recognized that bidding preferences for qualifying bidders provide such bidders with an opportunity to compete successfully against large, well-financed entities. The Commission also noted that it had found that the use of tiered or graduated small business definitions is useful in furthering its mandate under § 309(j) to promote opportunities for and disseminate licenses to a wide variety of applicants. An auction for one license in the 1670–1674 MHz band commenced on April 30, 2003 and closed the same day. One license was awarded. The winning bidder was not a small entity.

75. *Advanced Wireless Services.* The Commission adopted rules that affect applicants who wish to provide service in the 1710–1755 MHz and 2110–2155 MHz bands. The Commission did not know precisely the type of service that a licensee in these bands might seek to provide. Nonetheless, the Commission anticipated that the services that will be deployed in these bands may have capital requirements comparable to those in the broadband Personal Communications Service (PCS), and that the licensees in these bands will be presented with issues and costs similar to those presented to broadband PCS licensees. Further, at the time the broadband PCS service was established, it was similarly anticipated that it would facilitate the introduction of a new generation of service. Therefore, the Commission adopts the same small business size definition that it adopted for the broadband PCS service and that the SBA approved. In particular, it defines a ''small business'' as an entity with average annual gross revenues for the preceding three years not exceeding $40 million, and a ''very small business'' as an entity with average annual gross revenues for the preceding three years not exceeding $15 million. It also provides small businesses with a bidding credit of 15 percent and very small businesses with a bidding credit of 25 percent.

76. *Broadband Radio Service and Educational Broadband Service.* Broadband Radio Service (''BRS''), formerly known as Multipoint Distribution Service (''MDS''), and Educational Broadband Service (''EBS''), formerly known as Instructional Television Fixed Service (''ITFS''), use frequencies at 2150–2162 and 2500–2690 MHz to transmit video programming and provide broadband services to residential subscribers. These services, collectively referred to as ''wireless cable,'' were originally designed for the delivery of multichannel video programming, similar to that of traditional cable systems, but over the past several years licensees have focused their operations instead on providing two-way high-speed Internet access services. The Commission estimates that the number of wireless cable subscribers is approximately 100,000, as of March 2005. The SBA small business size standard for the broad census category

of Cable and Other Program Distribution, which consists of such entities generating $13.5 million or less in annual receipts, appears applicable to MDS and ITFS. Other standards also apply, as described.

77. The Commission has defined small MDS (now BRS) entities in the context of Commission license auctions. In the 1996 MDS auction, the Commission defined a small business as an entity that had annual average gross revenues of less than $40 million in the previous three calendar years. This definition of a small entity in the context of MDS auctions has been approved by the SBA. In the MDS auction, 67 bidders won 493 licenses. Of the 67 auction winners, 61 claimed status as a small business. At this time, the Commission estimates that of the 61 small business MDS auction winners, 48 remain small business licensees. In addition to the 48 small businesses that hold BTA authorizations, there are approximately 392 incumbent MDS licensees that have gross revenues that are not more than $40 million and are thus considered small entities. MDS licensees and wireless cable operators that did not receive their licenses as a result of the MDS auction fall under the SBA small business size standard for Cable and Other Program Distribution. Information available to us indicates that there are approximately 850 of these licensees and operators that do not generate revenue in excess of $13.5 million annually. Therefore, the Commission estimates that there are approximately 850 small entity MDS (or BRS) providers, as defined by the SBA and the Commission's auction rules.

78. Educational institutions are included in this analysis as small entities; however, the Commission has not created a specific small business size standard for ITFS (now EBS). The Commission estimates that there are currently 2,032 EBS licensees, and all but 100 of the licenses are held by educational institutions. Thus, it estimates that at least 1,932 EBS licensees are small entities.

79. *Cellular Licensees.* The SBA has developed a small business size standard for small businesses in the category ''Wireless Telecommunications Carriers (except satellite).'' Under that SBA category, a business is small if it has 1,500 or fewer employees. For the census category of ''Cellular and Other Wireless Telecommunications,'' Census Bureau data for 2002 show that there were 1,397 firms in this category that operated for the entire year. Of this total, 1,378 firms had employment of 999 or fewer employees, and 19 firms had employment of 1,000 employees or more. Thus, under this category and size standard, the majority of firms can be considered small.

80. *Broadband Personal Communications Service.* The broadband Personal Communications Service (PCS) spectrum is divided into six frequency blocks designated A through F, and the Commission has held auctions for each block. The Commission has created a small business size standard for Blocks C and F as an entity that has average gross revenues of less than $40 million in the three previous calendar years. For Block F, an additional small business size standard for ''very small business'' was added and is defined as an entity that, together with its affiliates, has average gross revenues of not more than $15 million for the preceding three calendar years. These small business size standards, in the context of broadband PCS auctions, have been approved by the SBA. No small businesses within the SBA-approved small business size standards bid successfully for licenses in Blocks A and B. There were 90 winning bidders that qualified as small entities in the Block C auctions. A total of 93 ''small'' and ''very small'' business bidders won approximately 40 percent of the 1,479 licenses for Blocks D, E, and F. On March 23, 1999, the Commission reauctioned 155 C, D, E, and F Block licenses; there were 113 small business winning bidders. On January 26, 2001, the Commission completed the auction of 422 C and F PCS licenses in Auction 35. Of the 35 winning bidders in this auction, 29 qualified as ''small'' or ''very small'' businesses. Subsequent events concerning Auction 35, including judicial and agency determinations, resulted in a total of 163 C and F Block licenses being available for grant.

81. *Specialized Mobile Radio.* The Commission awards ''small entity'' bidding credits in auctions for Specialized Mobile Radio (SMR) geographic area licenses in the 800 MHz and 900 MHz bands to firms that had revenues of no more than $15 million in each of the three previous calendar years. The Commission awards ''very small entity'' bidding credits to firms that had revenues of no more than $3 million in each of the three previous calendar years. The SBA has approved these small business size standards for the 900 MHz Service. The Commission has held auctions for geographic area licenses in the 800 MHz and 900 MHz bands. The 900 MHz SMR auction began on December 5, 1995, and closed on April 15, 1996. Sixty bidders claiming that they qualified as small businesses under the $15 million size standard won 263 geographic area licenses in the 900 MHz SMR band. The 800 MHz SMR auction for the upper 200 channels began on October 28, 1997, and was completed on December 8, 1997. Ten bidders claiming that they qualified as small businesses under the $15 million size standard won 38 geographic area licenses for the upper 200 channels in the 800 MHz SMR band. A second auction for the 800 MHz band was held on January 10, 2002 and closed on January 17, 2002 and included 23 BEA licenses. One bidder claiming small business status won five licenses.

82. The auction of the 1,050 800 MHz SMR geographic area licenses for the General Category channels began on August 16, 2000, and was completed on September 1, 2000. Eleven bidders won 108 geographic area licenses for the General Category channels in the 800 MHz SMR band qualified as small businesses under the $15 million size standard. In an auction completed on December 5, 2000, a total of 2,800 Economic Area licenses in the lower 80 channels of the 800 MHz SMR service were sold. Of the 22 winning bidders, 19 claimed ''small business'' status and won 129 licenses. Thus, combining all three auctions, 40 winning bidders for geographic licenses in the 800 MHz SMR band claimed status as small business.

83. In addition, there are numerous incumbent site-by-site SMR licensees and licensees with extended implementation authorizations in the 800 and 900 MHz bands. The Commission does not know how many firms provide 800 MHz or 900 MHz geographic area SMR pursuant to extended implementation authorizations, nor how many of these providers have annual revenues of no more than $15 million, or have no more than 1,500 employees. One firm has over $15 million in revenues. The Commission assumes, for purposes of this analysis, that all of the remaining existing extended implementation authorizations are held by small entities, as that small business size standard is established by the SBA.

84. *Rural Radiotelephone Service.* The Commission uses the SBA definition applicable to Wireless Telecommunications Carriers (except satellite), i.e., an entity employing no more than 1,500 persons. There are approximately 1,000 licensees in the Rural Radiotelephone Service, and the Commission estimates that there are 1,000 or fewer small entity licensees in the Rural Radiotelephone Service that may be affected by the rules and policies adopted herein.

85. *Air-Ground Radiotelephone Service.* The Commission uses the SBA

definition applicable to Wireless Telecommunications Carriers (except satellite), *i.e.*, an entity employing no more than 1,500 persons. There are approximately 100 licensees in the Air-Ground Radiotelephone Service, and the Commission estimates that almost all of them qualify as small entities under the SBA definition.

86. *Offshore Radiotelephone Service.* This service operates on several ultra high frequency (UHF) TV broadcast channels that are not used for TV broadcasting in the coastal area of the states bordering the Gulf of Mexico. At present, there are approximately 55 licensees in this service. The Commission uses the SBA definition applicable to Wireless Telecommunications Carriers (except satellite), i.e., an entity employing no more than 1,500 persons. The Commission is unable at this time to estimate the number of licensees that would qualify as small entities under the SBA definition. The Commission assumes, for purposes of this analysis, that all of the 55 licensees are small entities, as that term is defined by the SBA.

87. *Mobile Satellite Service Carriers.* Neither the Commission nor the U.S. Small Business Administration has developed a small business size standard specifically for mobile satellite service licensees. The appropriate size standard is therefore the SBA standard for Satellite Telecommunications, which provides that such entities are small if they have $13.5 million or less in annual revenues. Currently, the Commission's records show that there are 31 entities authorized to provide voice and data MSS in the United States. The Commission does not have sufficient information to determine which, if any, of these parties are small entities. The Commission notes that small businesses are not likely to have the financial ability to become MSS system operators because of high implementation costs, including construction of satellite space stations and rocket launch, associated with satellite systems and services. Still, the Commission requests comment on the number and identity of small entities that would be significantly impacted by the proposed rule changes.

88. *Wireless Communications Equipment Manufacturers.* The SBA has established a small business size standard for wireless communications equipment manufacturers. Under the standard, firms are considered small if they have 750 or fewer employees. Census Bureau data for 1997 indicates that, for that year, there were a total of 1,215 establishments in this category. Of those, there were 1,150 that had employment under 500, and an additional 37 that had employment of 500 to 999. The Commission estimates that the majority of wireless communications equipment manufacturers are small businesses.

89. *Radio, Television, and Other Electronics Stores.* This U.S. industry comprises: (1) establishments known as consumer electronics stores primarily engaged in retailing a general line of new consumer-type electronic products; (2) establishments specializing in retailing a single line of consumer-type electronic products (except computers); or (3) establishments primarily engaged in retailing these new electronic products in combination with repair services. The SBA has developed a small business size standard for this category of retail store; that size standard is $7.5 million or less in annual revenues. According to Census Bureau data for 1997, there were 8,328 firms in this category that operated for the entire year. Of these, 8,088 firms had annual sales of under $5 million, and an additional 132 had annual sales of $5 million to $9,999,999. Therefore, the majority of these businesses may be considered to be small.

90. *Internet Service Providers.* In the *NPRM*, the Commission seeks comment on whether to extend hearing aid compatibility requirements to entities offering access to VoIP applications over WiFi and other wireless technologies that may fall outside the definition of CMRS and/or the criteria in § 20.19(a), such as those operating on networks that do not employ ''an in-network switching facility that enables the provider to reuse frequencies and accomplish seamless hand-offs.'' Such applications may be provided, for example, by Internet Service Providers (ISPs). ISPs are Internet Publishing and Broadcasting and Web Search Portals that provide clients access to the Internet and generally provide related services such as web hosting, web page designing, and hardware or software consulting related to Internet connectivity. To gauge small business prevalence for these Internet Publishing and Broadcasting and Web Search Portals, the Commission must, however, use current census data that are based on the previous category of Internet Service Providers and its associated size standard. That standard was: all such firms having $23.5 million or less in annual receipts. Accordingly, to use data available to it under the old standard and Census Bureau data for 2002, there were 2,529 firms in this category that operated for the entire year. Of these, 2,437 firms had annual receipts of under $10 million, and an additional 47 firms had receipts of between $10 million and $24,999,999. Consequently, the Commission estimates that the majority of these firms are small entities that may be affected by this action.

91. *All Other Information Services.* This industry comprises establishments primarily engaged in providing other information services (except new syndicates and libraries and archives). VoIP services over wireless technologies could be provided by entities that provide other services such as email, online gaming, web browsing, video conferencing, instant messaging, and other, similar IP-enabled services. The SBA has developed a small business size standard for this category; that size standard is $6.5 million or less in average annual receipts. According to Census Bureau data for 1997, there were 195 firms in this category that operated for the entire year. Of these, 172 had annual receipts of under $5 million, and an additional nine firms had receipts of between $5 million and $9,999,999. Consequently, the Commission estimates that the majority of these firms are small entities that may be affected by this action.

92. *Part 15 Device Manufacturers.* Manufacturers of unlicensed wireless devices may also become subject to requirements in this proceeding for their devices used to provide VoIP applications. The Commission has not developed a definition of small entities applicable to unlicensed communications devices manufacturers. Therefore, the Commission will utilize the SBA definition applicable to Radio and Television Broadcasting and Wireless Communications Equipment Manufacturing. The Census Bureau defines this category as follows: This industry comprises establishments primarily engaged in manufacturing radio and television broadcast and wireless communications equipment. Examples of products made by these establishments are: transmitting and receiving antennas, cable television equipment, GPS equipment, pagers, cellular phones, mobile communications equipment, and radio and television studio and broadcasting equipment. The SBA has developed a small business size standard for Radio and Television Broadcasting and Wireless Communications Equipment Manufacturing, which is: all such firms having 750 or fewer employees. According to Census Bureau data for 2002, there were a total of 1,041 establishments in this category that operated for the entire year. Of this total, 1,010 had employment of under

500, and an additional 13 had employment of 500 to 999.[1] Thus, under this size standard, the majority of firms can be considered small.

D. Description of Projected Reporting, Recordkeeping, and Other Compliance Requirements for Small Entities

93. The Commission tentatively concludes that it will adopt several reporting, recordkeeping, and other compliance requirements which could affect small entities. For example, manufacturers and service providers have filed regular reports with the Commission since 2003 detailing their hearing aid compatibility efforts. In order to address shortcomings that have been observed in the existing reports and to render future reports as transparent and useful as possible for consumers, industry, and Commission staff responsible for helping to ensure that the Commission's hearing aid compatibility requirements are fully implemented, the Commission tentatively concludes to adopt new content requirements, as recommended in the Staff Report and proposed in the Joint Consensus Plan.

E. Steps Taken To Minimize Significant Economic Impact on Small Entities, and Significant Alternatives Considered

94. The RFA requires an agency to describe any significant, specifically small business alternatives that it has considered in reaching its proposed approach, which may include the following four alternatives (among others): (1) The establishment of differing compliance or reporting requirements or timetables that take into account the resources available to small entities; (2) the clarification, consolidation, or simplification of compliance or reporting requirements under the rule for small entities; (3) the use of performance, rather than design, standards; and (4) and exemption from coverage of the rule, or any part thereof, for small entities.

95. The Commission seeks comment generally on the effect the rule changes considered in this *NPRM* would have on small entities, on whether alternative rules should be adopted for small entities in particular, and on what effect such alternative rules would have on those entities. The Commission invites comment on ways in which it can achieve its goals while minimizing the burden on small wireless service providers, equipment manufacturers, and other entities.

96. For example, the Commission specifically considers handset deployment benchmark alternatives for small businesses. In this regard, the Commission requests comment regarding the appropriate benchmarks and deadlines for Tier II and Tier III carriers, resellers, mobile virtual network operators (MVNOs), and other categories of smaller service providers. The Commission notes that in the past numerous Tier II and Tier III carriers have requested, and many have been granted, extension of compatible handset deployment deadlines because they were unable timely to obtain compliant handsets in sufficient quantities from manufacturers. The Commission states that Tier II and Tier III carriers may have more difficulty than Tier I carriers in obtaining handsets due to market realities. Accordingly, the Commission seeks comment on the alternative of whether the handset deployment benchmarks proposed for Tier I carriers are appropriate for smaller carriers, and on whether the deadlines for those entities in particular should be later than those applicable to manufacturers. To consider the economic impact on small entities, the Commission asks commenters to address whether there is anything inherent in the characteristics of smaller service providers that would prevent them from meeting either the RF interference or inductive coupling-capable handset numbers and percentages set out for Tier I carriers. The Commission asks commenters to discuss with specificity any alternative requirements or schedules that they propose for these types of service providers, and the reasons for those alternatives.

97. The *NPRM* also considers the alternative of delayed reporting obligations for non-Tier I carriers, which includes small entities. The *NPRM* seeks comment on the appropriate reporting timelines for Tier II and III carriers, including the alternative of delaying their next reports for a period of 18 months to two years from their reports that will be submitted in November 2007, versus the alternative of whether they should instead be held to the same schedule as Tier I carriers in order to provide a steady source of information to consumers and to the Commission. In this context, the Commission considers the extent of the burdens to Tier II and III carriers that would be avoided by postponing their first reports as proposed under the Joint Consensus Plan. For example, given that Tier II and III carriers have already been filing reports regularly, the Commission seeks comment on the extent of any inconvenience or costs that would be avoided by postponing their first reports as proposed under the Joint Consensus Plan, balanced against the extent of information that would be lost by introducing a gap of 18 months or more in their reporting. Finally, the *NPRM* asks commenters to address whether the delayed reporting deadline alternative for Tier II and III carriers should depend on what deployment deadlines are adopted.

F. Federal Rules That May Duplicate, Overlap, or Conflict With the Proposed Rules

98. None.

V. Ordering Clauses

99. *It is ordered* that, pursuant to the authority of sections 4(i), 303(r), and 710 of the Communications Act of 1934, as amended, 47 U.S.C. 154(i), 303(r), and 610, this *NPRM is hereby adopted*.

100. *It is further ordered* that pursuant to applicable procedures set forth in §§ 1.415 and 1.419 of the Commission's Rules, 47 CFR 1.415, 1.419, interested parties may file comments on the *NPRM* on or before December 21, 2007 and reply comments on or before January 7, 2008.

101. *It is further ordered* that the petition of American National Standards Institute Accredited Standards Committee C63 (EMC) ANSI ASC C63™ *is granted* to the extent set forth herein.

102. *It is further ordered* that the Commission's Consumer Information Bureau, Reference Information Center, *shall send* a copy of the *NPRM*, including the IRFA, to the Chief Counsel for Advocacy of the Small Business Administration.

Federal Communications Commission.

Ruth A. Dancey,

Associate Secretary.

[FR Doc. E7–22657 Filed 11–20–07; 8:45 am]

BILLING CODE 6712–01–P

[1] *Id.* An additional 18 establishments had employment of 1,000 or more.

DEPARTMENT OF TRANSPORTATION

National Highway Traffic Safety Administration

49 CFR Part 571

[Docket No. NHTSA–2007–0014]

RIN 2127–AK09

Federal Motor Vehicle Safety Standards; Seating Systems, Occupant Crash Protection, Seat Belt Assembly Anchorages, School Bus Passenger Seating and Crash Protection

AGENCY: National Highway Traffic Safety Administration (NHTSA), Department of Transportation (DOT).

ACTION: Notice of proposed rulemaking (NPRM).

SUMMARY: NHTSA issued a report in 2002 on the results of a comprehensive school bus research program examining ways of further improving school bus safety. Based on that research, we are now proposing several upgrades to the school bus passenger crash protection requirements.

For new school buses of 4,536 kilograms (10,000 pounds) or less gross vehicle weight rating (GVWR), we propose to require lap/shoulder belts in lieu of the lap belts that are currently specified. For school buses with gross vehicle weight ratings (GVWR) greater than 4,536 kilograms (kg) (10,000 pounds), this NPRM provides guidance to State and local jurisdictions on the subject of installing seat belts. Each State or local jurisdiction would continue to decide whether to install belts on these large school buses. Where State or local decisions are made to install lap or lap/shoulder belts on large school buses, this NPRM proposes performance requirements for those voluntarily-installed seat belts on large school buses manufactured after the proposed effective date.

Other changes to school bus safety requirements are also proposed, including raising the height of seat backs from 20 inches to 24 inches on all new school buses.

DATES: Comments must be received on or before January 22, 2008.

ADDRESSES: You may submit comments to the docket number identified in the heading of this document by any of the following methods:

- *Federal eRulemaking Portal:* Go to *http://www.regulations.gov.* Follow the online instructions for submitting comments.
- *Mail:* Docket Management Facility, M–30, U.S. Department of Transportation, West Building, Ground Floor, Rm. W12–140, 1200 New Jersey Avenue, SE., Washington, DC 20590.
- *Hand Delivery or Courier:* West Building Ground Floor, Room W12–140, 1200 New Jersey Avenue, SE., between 9 a.m. and 5 p.m. Eastern Time, Monday through Friday, except Federal holidays.
- *Fax:* (202) 493–2251.

Regardless of how you submit your comments, you should mention the docket number of this document.

You may call the Docket at 202–366–9324.

Instructions: For detailed instructions on submitting comments and additional information on the rulemaking process, see the Public Participation heading of the **SUPPLEMENTARY INFORMATION** section of this document. Note that all comments received will be posted without change to *http://www.regulations.gov,* including any personal information provided.

Privacy Act: Please see the Privacy Act heading under Rulemaking Analyses and Notices.

FOR FURTHER INFORMATION CONTACT: For non-legal issues, Mr. Charles Hott, Office of Vehicle Safety Standards (telephone: 202–366–0247) (fax: 202–366–4921). Mr. Hott's mailing address is National Highway Traffic Safety Administration, NVS–113, 1200 New Jersey Avenue, SE., Washington, DC 20590.

For legal issues, Ms. Dorothy Nakama, Office of the Chief Counsel (telephone: 202–366–2992) (fax: 202–366–3820). Ms. Nakama's mailing address is National Highway Traffic Safety Administration, NCC–112, 1200 New Jersey Avenue, SE., Washington, DC 20590.

SUPPLEMENTARY INFORMATION:

Table of Contents

I. Introduction
II. Background
III. The Issue of Seat Belts on Large School Buses
IV. Studies
V. Federal Guidance on Belts on Large Buses
  a. NHTSA School Bus Research Results
  b. Agency Recommended Best Practices
  c. Guidance on Lap Belts on Large School Buses
VI. Proposed Upgrades to Occupant Crash Protection
  a. Improving the Compartmentalized School Bus Interior of Both Small and Large School Buses
  b. Additional Occupant Protection Requirements for Small School Buses (School Buses With a GVWR of 4,536 kg (10,000 lb) or Less)
  c. Additional Occupant Protection Requirements for Large School Buses With Voluntarily-Installed Lap/Shoulder Seat Belts
  d. Additional Requirements for Large School Buses with Voluntarily-Installed Lap Belts
VII. Quasi-Static Test for Lap/Shoulder Belts on Small and Large School Buses
  a. Stage 1: Torso Belt Anchorage Displacement
  b. Stage 2: Energy Absorption Capability of the Seat Back
  c. Request for Comments
VIII. Lead Time
IX. Rulemaking Analyses and Notices
X. Public Participation
Appendix A to the Preamble—Proposed Amendments to Federal Motor Vehicle Safety Standards

I. Introduction

This document proposes to upgrade the school bus occupant protection requirements of the Federal motor vehicle safety standards, primarily by amendments to Federal Motor Vehicle Safety Standard No. (FMVSS) No. 222, ''School bus passenger seating and crash protection'' (49 CFR 571.222), and by amendments to FMVSS Nos. 207, 208, and 210. It also provides guidance to state and local jurisdictions on the subject of installing seat belts on large school buses (school buses with a GVWR greater than 4,536 kilograms (kg) (10,000 pounds (lb)) and asks for comments on the agency's consideration of ''best practices'' concerning the belts on the large buses.[1]

This NPRM's most significant proposed changes to FMVSS No. 222 involve:

- Increasing the minimum seat back height requirement from 20 inches from the seat's seating reference point (SgRP) to 24 inches for all school buses;
- Requiring small school buses to have a lap/shoulder belt at each passenger seating position (the buses are currently required to have lap belts);
- Incorporating test procedures into the standard to test lap/shoulder belts in small school buses and voluntarily-installed lap/shoulder belts in large school buses to ensure both the strength of the anchorages and the compatibility of the seat with compartmentalization; and,
- Requiring all school buses with seat bottom cushions that are designed to flip-up, typically for easy cleaning, to have a self-latching mechanism.

[1] ''School bus'' is defined in 49 CFR § 571.3 as a bus that is sold, or introduced in interstate commerce, for purposes that include carrying students to and from school or related events, but does not include a bus designed and sold for operation as a common carrier in urban transportation. A ''bus'' is a motor vehicle, except a trailer, designed for carrying more than 10 persons. In this NPRM, when we refer to ''large'' school buses, we refer to those school buses with GVWRs of more than 4,536 kg (10,000 lb). These large school buses may transport as many as 90 students. ''Small'' school buses are school buses with a GVWR of 4,536 kg (10,000 lb) or less. Generally, these small school buses seat 15 persons or fewer, or have one or two wheelchair seating positions.

The proposed guidance to state and local jurisdictions on best practices of installing seat belts on large school buses acknowledges that, in terms of the optimum passenger crash protection that can be afforded an individual passenger on a large school bus, a lap/shoulder belt system, together with compartmentalization, would afford that optimum protection. Thus, we encourage providers to consider lap/shoulder belts on large school buses. However, installing current lap/shoulder belts on large school buses would reduce the passenger carrying capacity of large buses. If children were diverted to other means of transport to school, such as transport by smaller, private vehicles, walking, or biking, the belts on the buses could result in an overall disbenefit to pupil transportation safety due to the children displaced from the large school buses having to find less safe modes of transportation to get to or from school or related events. Thus, we are not proposing to require lap/shoulder belts on large school buses, and we recommend providers to ascertain whether installing lap/shoulder belts would reduce the number of children that are transported to school on large school buses.

II. Background

The Motor Vehicle and Schoolbus Safety Amendments of 1974 directed NHTSA to issue motor vehicle safety standards applicable to school buses and school bus equipment. In response to this legislation, NHTSA revised several of its safety standards to improve existing requirements for school buses, extended ones for other vehicle classes to those buses, and issued new safety standards exclusively for school buses. FMVSS No. 222, one of a set of new standards for school buses, improves protection to school bus passengers during crashes and sudden driving maneuvers.

Effective since 1977, FMVSS No. 222 contains occupant protection requirements for school bus seating positions and restraining barriers. Its requirements for school buses with GVWR's of 4,536 kg (10,000 lb) or less differ from those set for school buses with GVWR's greater than 4,536 kg (10,000 lb), because the ''crash pulse'' or deceleration experienced by the small school buses is more severe than that of the large buses in similar collisions. For the small school buses, the standard includes requirements that all seating positions must be equipped with properly installed lap or lap/shoulder seat belt assemblies and anchorages for passengers.[2] NHTSA decided that seat belts were necessary on small school buses to provide adequate crash protection for the occupants. For the large school buses, FMVSS No. 222 relies on requirements for ''compartmentalization'' to provide passenger crash protection. Investigations of school bus crashes prior to issuance of FMVSS No. 222 found the school bus seat was a significant factor in causing injury. NHTSA found that the seat failed the passengers in three principal respects: by being too weak, too low, and too hostile (39 FR 27584; July 30, 1974). In response to this finding, NHTSA developed a set of requirements which comprise the ''compartmentalization'' approach.

Compartmentalization ensures that passengers are cushioned and contained by the seats in the event of a school bus crash by requiring school bus seats to be positioned in a manner that provides a compact, protected area surrounding each seat. If a seat is not compartmentalized by a seat back in front of it, compartmentalization must be provided by a padded and protective restraining barrier. The seats and restraining barriers must be strong enough to maintain their integrity in a crash yet flexible enough to be capable of deflecting in a manner which absorbs the energy of the occupant. They must meet specified height requirements and be constructed, by use of substantial padding or other means, so that they provide protection when they are impacted by the head and legs of a passenger. Compartmentalization minimizes the hostility of the crash environment and limits the range of movement of an occupant. The compartmentalization approach ensures that high levels of crash protection are provided to each passenger independent of any action on the part of the occupant.

III. The Issue of Seat Belts on Large School Buses

NHTSA has considered the question of whether seat belts should be required on large school buses from the inception of compartmentalization and the school bus safety standards. NHTSA has been repeatedly asked to require belts on buses, and has repeatedly concluded that compartmentalization provides a high level of safety protection that obviates the safety need for a Federal requirement necessitating the installation of seat belts. Further, the agency has been acutely aware that a decision on requiring seat belts in large school buses cannot ignore the implications of such a requirement on pupil transportation costs. The agency has been attentive to the fact that, as a result of requiring belts on large school buses, school bus purchasers would have to buy belt-equipped vehicles regardless of whether seat belts would be appropriate for their needs. NHTSA has concluded that those costs should not be imposed on all purchasers of school buses when large school buses are currently very safe. In the area of school transportation especially, where a number of needs are competing for limited funds, persons responsible for school transportation might want to consider other alternative investments to improve their pupil transportation programs which can be more effective at reducing fatalities and injuries than seat belts on large school buses, such as by acquiring additional new school buses to add to their fleet, or implementing improved pupil pedestrian and driver education programs. Since each of these efforts competes for limited funds, the agency has maintained that those administrators should decide how their funds should be allocated.

IV. Studies

Nonetheless, throughout the past 30 years that compartmentalization and the school bus safety standards have been in effect, the agency has openly and continuously considered the merits of a seat belt requirement for large school buses.[3] The issue has been closely analyzed by other parties as well, such as the National Transportation Safety Board, and the National Academy of Sciences. Various reports have been issued, the most significant of which are described below.

[2] Lap/shoulder belts and appropriate anchorages for the driver and front passenger (if provided) seating position, lap belts and appropriate anchorages for all other passenger seating positions.

[3] Through the years, NHTSA has been petitioned about seat belts on large school buses. (See, e.g., denials of petitions to require seat belt anchorages, 41 FR 28506 (July 12, 1976), 48 FR 47032 (October 17, 1983); response to petition for rulemaking to prohibit the installation of lap belts on large school buses, 71 FR 40057 (July 14, 2006).) In a letter dated February 16, 2007, the National Association of Pupil Transportation (NAPT) petitioned the agency ''to initiate rulemaking on occupant protection in school buses.'' NAPT said that it did not support the installation of lap belts in large school buses, nor the installation of lap/shoulder belts. NAPT stated it ''will only support changes to compartmentalization when we are sure that those changes will not compromise student safety in any way.'' NAPT requested that the agency review FMVSS No. 222, ''with the goal of establishing a safety system that will definitively enhance the current passenger crash protection for all children that ride a school bus.'' NAPT also advocated a public education program emphasizing the importance of safe school bus transportation.

Studies

• *National Transportation Safety Board, 1987*

In 1987, the National Transportation Safety Board (NTSB) reported on a study of forty-three post-standard school bus crashes investigated by the Safety Board. NTSB concluded that most fatalities and injuries in school bus crashes occurred because the occupant seating positions were directly in line with the crash forces, and that seat belts would not have prevented those injuries and fatalities. (NTSB/SS–87/01, Safety Study, Crashworthiness of Large Post-standard School Buses, March 1987, National Transportation Safety Board.)

• *National Academy of Sciences, 1989*

A 1989 National Academy of Sciences (NAS) study concluded that the overall potential benefits of requiring seat belts on large school buses were insufficient to justify a Federal mandate for installation. The NAS also stated that funds used to purchase and maintain seat belts might be better spent on other school bus safety programs with the potential to save more lives and reduce more injuries. (Special Report 222, Improving School Bus Safety, National Academy of Sciences, Transportation Research Board, Washington, DC, 1989.)

• *National Transportation Safety Board, 1999*

In 1999, NTSB reported on six school bus crashes it investigated in which passenger fatalities or serious injuries occurred away from the area of vehicle impact. NTSB found compartmentalization to be an effective means of protecting passengers in school bus crashes. However, because many of those passengers injured in the six crashes were believed to have been thrown from their compartments, NTSB believed other means of occupant protection should be examined. (NTSB/SIR–99/04, Highway Safety Report, Bus Crashworthiness Issues, September 1999, National Transportation Safety Board.)

• *National Academy of Science, 2002*

In 2002, NAS published a study that analyzed the safety of various transportation modes used by school children to get to and from school and school-related activities. The report concluded that each year there are approximately 815 school transportation fatal injuries per year. Two percent were school bus-related, compared to 22 percent due to walking/bicycling, and 75 percent from passenger car crashes, especially those with teen drivers. The report stated that changes in any one characteristic of school travel can lead to dramatic changes in the overall risk to the student population. Thus, NAS concluded, it is important for school transportation decisions to take into account all potential aspects of changes to requirements to school transportation. (Special Report 269, ''The Relative Risks of School Travel: A National Perspective and Guidance for Local Community Risk Assessment,'' Transportation Research Board of the National Academies, 2002.)

• *National Highway Traffic Safety Administration, 2002*

In 2002, NHTSA issued a Congressional Report that detailed occupant safety on school buses and analyzed options for improving occupant safety. NHTSA concluded that compartmentalization effectively lowered injury measures by distributing crash forces with the padded seating surface. Lap belts showed little to no benefit in reducing serious/fatal injuries. The agency determined that properly used combination lap and shoulder belts have the potential to be effective in reducing fatalities and injuries for not only frontal collisions, but also rollover crashes where belt systems are particularly effective in reducing ejection. However, the addition of lap/shoulder belts on buses would increase capital costs and reduce seating capacity on the buses. (''Report to Congress, School Bus Safety: Crashworthiness Research, April 2002,'' *http://www-nrd.nhtsa.dot.gov/departments/nrd-11/SchoolBus/SBReportFINAL.pdf.)*

V. Federal Guidance on Belts on Large Buses

This document provides guidance to state and local jurisdictions on the subject of installing seat belts on large school buses and asks for comments on the agency's consideration of ''best practices'' concerning the belts on the large buses.

This guidance is provided in response to the information that the agency received at its July 11, 2007 public meeting in Washington, DC on seat belts on school buses (notice of public meeting, 72 FR 30739, June 4, 2007, Docket 28103).[4] In this meeting, NHTSA brought together a roundtable of State and local government policymakers, school bus and seat manufacturers, pupil transportation associations, and consumer groups to address: State and local policy perspectives regarding whether to require seat belts on school buses; information on the type of seat belt system designs that are currently being offered on large school buses; the economic impact that implementation of seat belt requirements for school buses (including purchase and maintenance of belts) have on States and local school districts; and the experience of schools and States in training and educating children, parents and drivers to use seat belts on large school buses.[5] At the meeting, participants requested that NHTSA provide up-to-date Federal guidance on whether seat belts should be provided on school buses, and whether lap belts should or should not be installed.

The agency has considered all of the comments made at the meeting. NHTSA found the following views particularly helpful:

• Mr. Charles Hood of the Florida Department of Education related the State of Florida's experience with lap belts on school buses. Informally, Mr. Hood estimated that the lap belt usage rate in Florida was about 70 percent for elementary school students, 35 percent for middle school students, and 25 percent for high school students. Mr. Hood reported that vandalism and maintenance of the seat belts were not major concerns. Mr. Hood estimated that the annual charge to equip all of Florida's 1399 school buses with lap/shoulder belts would be about $14 million.

• Mr. Hood believed that the key point of the debate is whether the three point belts will: Improve overall safety through the crash protection improvements that they provide, or reduce overall safety by potentially reducing the number of children who ride in school buses. Mr. Hood stated that States that require lap belts need Federal guidance as to whether they may or should continue to specify lap belts in their school buses.

• Ms. Ann Roy Moore of the Huntsville, Alabama City Schools recommended that national agencies come up with some standards that could be used to address the issue of school bus safety generally and seat belt safety in particular.

• Mr. Ken Hedgecock of Thomas Built Buses stated that two-point belts are on 27 percent of the school buses Thomas Built manufactures, and three-point belts are on 2 percent the school buses that it manufactures. Mr. Hedgecock said that the greatest concern relating to seat belts pertains to capacity and cost issues of the three-point belt system. The reduction in capacity and incremental costs of the three-point

[4] NHTSA also received written comments to docket 28103. We will address all relevant issues raised in those comments in today's NPRM and in a final rule or other rulemaking document following today's NPRM.

[5] A transcript of the July 11, 2007 public meeting is available in docket 28103.

system may have the unintended consequence of transporting fewer children on the yellow school bus, thus negatively affecting the safety of our nation's children. Mr. Hedgecock recommended the following as it pertains to seat belts: Clarification is needed on the use of two-point belt systems versus three-point belt systems in school buses; clarification is needed on the designated seating position as it pertains to a seat with seat belts; and there is a need for clear performance standards for the integration of all systems: the school bus, the seat, and the belts.

• Mr. Steve Wallen of Safeguard, a division of Indiana Mills Manufacturing Inc. (IMMI), stated that its testing shows that compartmentalization does well in front and rear impact crashes, but not particularly well in rollovers. Mr. Wallen recommends the FMVSSs should be amended so as to allow for lap/shoulder belts while maintaining compartmentalization to protect unbelted occupants. Mr. Wallen suggested that the FMVSSs specify requirements such that a school bus seat can withstand a crash with a student wearing a seat belt and one behind not wearing a seat belt at the same time. Mr. Wallen noted that retrofitting school buses is substantially more expensive and difficult than installing seats in new buses.

• Ms. Robin Leeds of the National School Transportation Association (NSTA) stated that a Federal mandate is not appropriate because of the costs. NSTA believes States and local school districts are in a better position to determine the best use of their resources than the Federal government. In the NSTA's view, the only way any safety belt program can be successful is if it has the full commitment of the school administration and of parents to make them work. NSTA also recommended that NHTSA develop standards for voluntarily-installed lap/shoulder belt systems so that ''everybody knows what system to use when they do install those systems.''

a. NHTSA School Bus Research Results

Our guidance about seat belts on school buses also takes into account the agency's research findings assessing the efficacy of existing safety measures employed on school buses and possible improvements to school bus occupant protection.

The Transportation Equity Act for the 21st Century (TEA–21) directed NHTSA to study and assess school bus occupant safety and analyze options for improvement. In response, the agency developed a research program to determine the real-world effectiveness of FMVSS No. 222 requirements for school bus passenger crash protection, evaluate alternative passenger crash protection systems in controlled laboratory tests, and provide findings to support rulemaking activities to upgrade the passenger crash protection for school bus passengers.

The research program consisted of NHTSA first conducting a full-scale school bus crash test to determine a representative crash pulse. The crash test was conducted by frontally impacting a conventional style school bus (Type C) into a rigid barrier at 30 mph (48.3 km/h). The impact speed was chosen to ensure that sufficient energy would be imparted to the occupants in order to evaluate the protective capability of compartmentalization, plus provide a level at which other methods for occupant injury mitigation could be evaluated during sled testing. A 30 mph (48 km/h) impact into the rigid barrier is also equivalent to two vehicles of similar size impacting at a closing speed of approximately 60 mph (96 km/h), which was found to be prevalent in the crash database files.

In the crash test, we used Hybrid III 50th percentile adult male dummies (representing adult and large teenage occupants), 5th percentile adult female (representing an average 12-year-old (12YO) occupant), and a 6-year-old child dummy (representing an average 6-year-old (6YO) occupant). The dummies were seated so that they were as upright as possible and as rearmost on the seat cushion as possible. The agency evaluated the risk of head injury recorded by the dummies (Head Injury Criterion (HIC15)), as well as the risk of chest (chest G's) and neck injury (Nij),[6] as specified in FMVSS No. 208 ''Occupant crash protection.''

NHTSA then ran frontal crash test simulations at the agency's Vehicle Research and Test Center (VRTC), using a test sled to evaluate passenger protection systems. Twenty-five sled tests using 96 test dummies of various sizes utilizing different restraint strategies were conducted that replicated the acceleration time history of the school bus full-scale frontal impact test. The goal of the laboratory tests was to analyze the dummy injury measures to gain a better understanding of the effectiveness of the occupant crash protection countermeasures. In addition to injury measures, dummy kinematics and interaction with restraints (i.e., seat backs and seat belts, as well as each other) were also analyzed to provide a fuller picture of the important factors contributing to the type, mechanism, and potential severity of any resulting injury.

NHTSA studied three different restraint strategies: (a) compartmentalization; (b) lap belt (with compartmentalization); and, (c) fore/aft loading.[7]

Within the context of these restraint strategies, various boundary conditions were evaluated: (a) Seat spacing—483 mm (19 inches), 559 mm (22 inches) and 610 mm (24 inches); (b) seat back height—nominally 508 mm (20 inches) and 610 mm (24 inches); and, (c) fore/aft seat occupant loading. Ten dummies were tested with misused or out-of-position (OOP) lap or shoulder restraints. The restraints were misused by placing the lap belt too high up on the waist, placing the lap/shoulder belt placed behind the dummy's back, or placing the lap/shoulder belt under the dummy's arm.

The agency found the following with regard to compartmentalization:

• Low head injury values were observed for all dummy sizes, except when override[8] occurred.

• High head injury values or dummy-to-dummy contacts beyond the biofidelic range of the test dummy were produced when the large male dummy overrode the seat in front of it, while the high-back seats prevented this.

• Low chest injury values were observed for all dummy sizes.

• Based on dummy motion and interaction with each other, compartmentalization was sensitive to seat back height for the 50th percentile male dummy.

• Compartmentalization of 6YO and 5th percentile female dummies did not

[6] HIC15, Chest G, and Nij values are used to predict injury risk in frontal crashes. HIC15 is a measure of the risk of head injury, Chest G is a measure of chest injury risk, and Nij is a measure of neck injury risk. The reference values for these measurements are the thresholds for compliance used to assess new motor vehicles with regard to frontal occupant protection during crash tests, FMVSS No. 208. For HIC15, a score of 700 is equivalent to a 30 percent risk of a serious head injury (skull fracture and concussion onset). In a similar fashion, Chest G of 60 equates to a 20 percent risk of a serious chest injury and Nij of 1 equates to a 22 percent risk of a serious neck injury. For all these measurements, higher scores indicate a higher likelihood of risk. For example, a Nij of 2 equates to a 67 percent risk of serious neck injury while a Nij of 4 equates to a 99 percent risk. More information regarding these injury measures can be found at NHTSA's Web site (*http://www-nrd.nhtsa.dot.gov/pdf/nrd-11/airbags/rev_criteria.pdf*).

[7] Unbelted occupants in the aft seat will affect the kinematics of belted occupants in the fore seat due to seat back deformation. Similarly, belted occupant loading of the fore seat back thru the torso belt will affect the compartmentalization for unbelted occupants in the aft seat.

[8] Override means an occupant's head or torso translates forward beyond the forward seat back providing compartmentalization.

appear to be sensitive to rear loading conditions.

• Compartmentalization of the 50th percentile male dummy did not appear to be sensitive to seat spacing for the 50th percentile male dummy.

The agency found the following with regard to lap belts on large school buses:

• Head and chest injury values were low for all dummy sizes.

• The average neck injury value was above the injury assessment reference value (IARV) for all test dummies, and was 70 percent above for the 5th percentile female dummy.

• Neck injury values increased for the 5th percentile female dummy when the seat spacing was increased from 483 mm (19 inches) to 559 mm (22 inches).

The agency found the following with regard to properly worn lap/shoulder belts on school buses:

• Head, chest and neck injury values were low for all size dummies and below those seen in the compartmentalization and lap belt results.

• Average head injury values were, at most, about half those seen in the compartmentalization and lap belt results.

• Neck injury values increased with application of rear loading for the 6YO and 5th percentile female dummies.

• Lap/shoulder belt systems would require approximately 15 inches seat width per passenger seating position. The standard school bus bench seat is 39 inches wide, and is considered a three-passenger seat. If the width of the seat bench were increased to 45 inches for both seats on the left and right side of the school bus, the aisle width would be reduced to an unacceptable level.

NHTSA found that, for improperly worn lap/shoulder belts:

• Placing the shoulder belt behind the dummy's back resulted in dummy motion and average dummy injury values similar to lap belt restraint.

• Placing the shoulder belt under the dummy's arm provided more restraint on dummy torso motions than when the belt is placed behind the back. Average dummy injury values for the 6YO were about the same as seen with lap/shoulder belts and 5th percentile female dummy injury values were between those seen in lap/shoulder belts and lap belts.

b. Agency Recommended Best Practices

School buses are one of the safest forms of transportation in the U.S. Every year, approximately 474,000 public school buses, transporting 25.1 million children to and from school and school-related activities,[9] travel an estimated 4.8 billion route miles.[10] Over the 11 years ending in 2005, there was an annual average of 26 school transportation related fatalities (11 school bus occupants (including drivers and passengers) and 15 pedestrians).[11] The bus occupant fatalities were comprised of six school-age children, with the remaining being adult drivers and passengers.[12] On average, there were 9 crashes per year in which an occupant was killed. The school bus occupant fatality rate of 0.23 fatalities per 100 million vehicle miles traveled (VMT) is more than six times lower than the overall rate for motor vehicles of 1.5 per 100 million VMT.[13]

The agency's school bus research results indicated that lap/shoulder belts could enhance the safety of large school buses, such that a child who has a seat on the school bus and who is belted with a lap/shoulder belt on the bus would have an even lower risk of head and neck injury than on current large school buses.[14] Thus, if ample funds were available for pupil transportation, and pupil transportation providers could order and purchase a sufficient number of school buses needed to provide school bus transportation to all children, we would recommend that pupil transportation providers consider installing lap/shoulder belts on large school buses because of the enhancements that lap/shoulder belts could make to school buses. Realistically, however, we recognize that funds provided for pupil transportation are limited, and that the monies spent on lap/shoulder belts on large school buses would usually draw from the monies spent on other crucial aspects of school transportation, such as purchasing new school buses to ensure that as many children as possible are provided school bus transportation, on driver and pupil training on safe transportation practices, and on upkeep and maintenance of school buses and school bus equipment. Bearing these considerations in mind, we recommend that pupil transportation providers consider lap/shoulder belts on large school buses *only if* there would be no reduction in the number of children that are transported to or from school or related events on large school buses. Reducing bus ridership would likely result in more student fatalities, since walking and private vehicles are less safe than riding a large school bus without seat belts.

Our best practices recommendation seeks to reflect real world considerations about the safety record of school buses, the economic impact on school systems incurred by the costs of seat belts and the impact that lap/shoulder belts have on the seating capacity of large school buses. Our laboratory test results indicate that our test dummies measured better head protection performance when lap/shoulder belts were properly used with compartmentalization than compared to compartmentalization alone. However, best practices compel us to acknowledge that installation of lap/shoulder belts, as currently designed, reduce the number of seats offered to students, resulting in fewer children riding school buses, exposing more children to higher safety risks in alternative forms of transport to or from school or related events, and a probable overall net safety disbenefit due to their installation.

Best practices compel us to encourage pupil transportation providers to make a comprehensive analysis of their needs and determine how lap/shoulder belts on large school buses accord with those needs. The best practices approach we have developed allows States the leeway to decide whether to require seat belts on large school buses, and whether lap only or lap/shoulder belts should be ordered. Given the tradeoff noted above, States should be permitted the flexibility of deciding whether to order large school buses with the seat belt safety enhancements after considering the excellent safety record of large school buses with compartmentalization, the benefits of allocating resources to belts as opposed to alternative safety measures, and the means available to ensure that the belts would be used. If a State were to determine that lap/shoulder belts are in its best interest, NHTSA encourages the State to install those systems. Today's document proposes performance requirements for the lap/shoulder belts, to ensure they will work well in a crash even if voluntarily installed.

[9] School Transportation News, Buyers Guide 2007.

[10] This value was reported by School Bus Fleet 2007 Fact Book.

[11] ''Traffic Safety Facts—School Transportation Related Crashes,'' NHTSA, DOT HS 810 626. The data in this publication account for all school transportation-related deaths in transporting students to and from school and school related activities. This includes non-school buses used for this purpose when these vehicles are involved in a fatal crash.

[12] For the crashes resulting in the 11 annual school bus occupant fatalities, 51 percent of the fatalities and 52 percent of the crashes were from frontal collisions. Traffic Safety Facts 2005, School Transportation-Related Crashes, DOT HS 810 626.

[13] Traffic Safety Facts 2005, DOT HS 810 631.

[14] The TEA–21 research program did not study whether belts could enhance the protection of compartmentalization in side crashes and rollovers. Most school bus fatalities occur in a crash involving a rollover, and the side crash fatalities are about as frequent as front crash fatalities.

Certain highway safety grant funds may continue to be used to fund the purchase and installation of seat belts (lap or lap/shoulder) on school buses. Annually, all States, the District of Columbia, Puerto Rico, the Bureau of Indian Affairs, and the U.S. territories receive NHTSA Section 402 State and Community Highway Safety Formula Grant Funds. A wide range of behavioral highway safety activities that help reduce crashes, deaths, and injuries, including seat belt-related activities, qualify as eligible costs under the Section 402 program. Each State determines how to allocate its funds based on its own priorities and identified highway safety problems as described in an annual Highway Safety Plan (HSP).

As with all proposed expenditures of Section 402 funds, the purchase and installation of seat belts on school buses must be identified as a need in the State's HSP and comply with all requirements under 23 U.S.C. Part 1200. Section 402 funds may not be used to purchase the school bus in its entirety, but may fund only the incremental portion of the bus cost directly related to the purchase and installation of seat belts.

We would advise States that are considering purchasing seat belts for school buses to be guided by the proposed standards in this notice of proposed rulemaking.

c. Guidance on Lap Belts on Large School Buses

In the July 11, 2007 public meeting, some participants asked for guidance on whether lap belts should be prohibited on large school buses. The question was asked in the aftermath of school bus research studies that found lap belts were associated with increased risk of injury on large school buses.[15]

After considering the data and other information on lap belts on large school buses, NHTSA does not believe there is a need to prohibit lap belts on the buses. In its 1999 report on bus crashworthiness, the NTSB concluded that the compartmentalization requirement for school buses in FMVSS No. 222 is incomplete in addressing school bus occupant protection in rollovers and lateral impacts from large vehicles, in that in such crashes, passengers do not always remain completely within the seating compartment. Although we have not found a safety need exists with respect to those non-frontal crashes to warrant requiring seat belts on large school buses,[16] we have always permitted States to choose to require the belts over and above the Federally required compartmentalization in the school buses they purchase.

We realize that laboratory research, including our own on lap belted dummies, shows relatively poor performance of lap belts in large school buses. However, this research involved severe frontal impacts. We cannot make a determination, based on the results of the limited testing with lap belt restraints in a severe frontal crash condition, that the addition of lap belts in large school buses reduces overall occupant protection. Lap belts are required in three States (New York (1987), New Jersey (1994), Florida (2001)), in many other school districts, and in special-needs equipped school buses. NHTSA has examined in depth New York State school bus crash data for lap belt equipped and non-belt equipped buses, and could not conclude that lap belts either helped or hurt occupant injury outcomes.

VI. Proposed Upgrades to Occupant Crash Protection

After considering the findings of NHTSA's school bus research program, we have decided to issue this NPRM to propose several sets of upgrades to the school bus safety requirements. The first set of upgrades involves improving the compartmentalized school bus interior on both small and large school buses. Seat back height would be increased from 20 inches to 24 inches to reduce the potential for passenger override in a crash, and school buses with seat bottom cushions that are designed to flip-up, typically for easy cleaning, would need a self-latching mechanism. The proposal to raise seat back height responds to findings from the agency's school bus research program, while the proposal for self-latching mechanisms responds to an NTSB recommendation to NHTSA (H–84–75).

The second set of upgrades involves specifics about the occupant protection requirements required for passengers of small school buses (school buses with a GVWR of 10,000 lb or less). In response to NHTSA's school bus research findings, this NPRM proposes to require small school buses to have lap/shoulder belts instead of just lap belts. The lap/shoulder belts would have to fit all passengers ages 6 through adult, and be equipped with retractors. The lap/shoulder belts would have to meet the existing anchorage strength requirements for lap/shoulder belts in FMVSS No. 210 and would be subject to new requirements for belt anchor location and torso belt adjustability. FMVSS No. 207 would also be amended to apply to passenger seats in small school buses. A newly-developed ''quasi-static'' test requirement (discussed in the next section of this preamble) would be adopted into FMVSS No. 222 to test school bus seats with lap/shoulder belts, to help ensure that seat backs incorporating lap/shoulder belts are strong enough to withstand the forward pull of the torso belts in a crash and the forces imposed on the seat from unbelted passengers to the rear of the belted occupants. These requirements would add to existing compartmentalization requirements for seat performance (e.g., seat performance forward, S5.1.3 of FMVSS No. 222, and seat performance rearward, S5.1.4). A minimum seat belt width of 15 inches would be specified for all school bus seats with lap/shoulder belts.

The third set of upgrades involves requirements for voluntarily-installed seat belts on large school buses. For large school buses with voluntarily-installed lap/shoulder belts, the vehicle would be subject to the requirements described above for lap/shoulder belts on small school buses, except FMVSS No. 207 would not apply to the passenger seats. The quasi-static test procedures for small school buses would slightly vary from those applying to seats on large school buses with voluntary lap/shoulder belts, to account for crash characteristic differences of large school buses versus small school buses. (Due to the mass and other characteristics of the vehicles, in crashes small school buses are subject to

[15] See the results of NHTSA's school bus research program (Report to Congress, School Bus Safety: Crashworthiness Research, *supra*). In addition, a 1985 study by Transport Canada provided data comparing the reaction of three belted and three unbelted 5th percentile adult female anthropomorphic test dummies in a 48 km/h (30 mph) frontal collision of a large school bus meeting compartmentalization requirements. The results indicated that the belted dummies experienced higher head accelerations, lower chest accelerations and more severe neck extension than did the unbelted ones. Accordingly, the study concluded that the use of a lap belt system in a school bus ''may result in more severe head and neck injuries for a belted occupant than an unbelted one, in a severe frontal collision.'' (School Bus Safety Study, January 1985). After analyzing the Transport Canada study, NHTSA could not conclude from the report's findings that belts degraded the benefits of compartmentalization to the extent that the supplemental restraint system rendered inoperative the safety of large school buses, but NHTSA acknowledged that the possibility exists that the occupant kinematics shown in the Canadian tests could occur. (Docket No. 85–14; Notice 02, RIN 2127–AB84, March 22, 1989).

[16] We reiterate our conclusion that the overall potential benefits of requiring lap belts on large school buses are insufficient to justify a Federal requirement for mandatory installation. NAS has also suggested that the funds used for required seat belts might be better used in other school bus safety programs. Special Report 222 (1989), *supra*.

higher severity forces than large school buses.)

For large school buses with voluntarily-installed lap belts, the vehicles would be required to meet FMVSS No. 210 requirements of a loading force of 22,240 N (5,000 pounds) per seating position. This would be consistent with the existing lap belt loading requirement for small school buses and light vehicles with lap belt only systems.

These proposed requirements are discussed below.[17] In addition, NHTSA has prepared a Technical Analysis that, among other things, presents a detailed analysis of data, engineering studies, and other information supporting these proposals.[18] A copy of this Technical Analysis will be placed in the docket.

a. Improving the Compartmentalized School Bus Interior of Both Small and Large School Buses

• *Seat back height.* At present, school bus seat back height is specified at S5.1.2 of FMVSS No. 222 to be at a minimum 508 millimeters (mm) (20 inches (in)). In this NPRM, we propose that the minimum seat back height for school bus seats be raised to 610 mm (24 in).

In NHTSA's school bus research program, when dummies representing older students were compartmentalized with current 20-inch high seat backs, the dummies were much more likely to override the seat and make head contact with test dummies that were placed in seats forward of the dummies. While the injury potential of these contacts was not quantifiable, dummies overriding seats means that the compartmentalization was not working. The highest HIC 15 value was registered when a 50th percentile male dummy behind a 20-inch seat back contacted the seat back two rows ahead. In cases where incidental contact did occur, the HIC 15 values tended to be very high. In two cases, the HIC 15 values were over 2,000 and the third was over 5,000. For the 24-inch seat backs, there was only dummy interaction between the rows of seats if both the forward and rearward dummies were 50th percentile male dummies. The high seat back seats effectively prevented the passengers from overriding the seat backs.

In the past, NHTSA has been informed that with the higher seat backs, drivers are not able to see and supervise the children. However, NHTSA is not aware of data showing that the higher seat backs result in supervision problems. NHTSA notes that four states (Illinois, New Jersey, New York, and Ohio) plus many other school districts require their school bus seats to have 24-inch seat backs. These states represent about 20 percent of all students in public transportation. We have received no reports of supervisory or safety related issues resulting from the higher seat backs from these jurisdictions. We request public comment on this issue.

• *Restraining barrier height.* We propose to amend S5.2.2, ''Barrier position and rear surface area,'' to specify that the rear surface area of the restraining barrier shall be such that in the front projected view, the restraining barrier's surface area above the horizontal plane that passes through the seating reference point, and below the horizontal plane 610 mm (24 inches) above the seating reference point, shall be not less than 90 percent of the seat bench width in millimeters multiplied by 610 (inches multiplied by 24). We are also proposing that restraining barriers have a minimum width of 75 percent of the seat bottom cushion at the upper portion of the restraining barrier. This is needed to ensure that the restraining barrier has sufficient width and area so that it sufficiently restrains passengers. Further, we seek to clarify that the restraining barrier's perimeter need not coincide with or lie outside of the perimeter of the seat back of the seat for which it is required if that seat back is higher than the minimum required by FMVSS No. 222. (Such a position would be consistent with an April 8, 1977 NHTSA interpretation letter to Wayne Corporation.)

• *Seat cushion latches.* At present, FMVSS No. 222 at S5.1.5 requires seat bottom cushions to withstand an upward force that is five times the weight of the seat bottom cushion. S5.1.5 specifies that, with all manual attachment devices between the seat and the seat cushion in the manufacturer's designated position for attachment, the seat cushion shall not separate from the seat at any attachment point when subjected to an upward force in Newtons of 5 times the mass of the seat cushion in kilograms and multiplied by 9.8 m/s^2, applied in any period of not less than 1 nor more than 5 seconds, and maintained for 5 seconds.

This text of S5.1.5 has remained unchanged since 1976. NHTSA notes that in order to allow the cushion to be removed or flipped up for maintenance, some seat cushions have been designed to attach to the rear seat frames with clips that swivel on and off the frame and with stationary clips that slip under the front frame member. Such cushion designs meet S5.1.5.

In 1984, the National Transportation Safety Board (NTSB) issued a recommendation to NHTSA (H–84–75) that seat cushions be attached with a fail-safe latching device to ensure that the cushions remain in their installed position during impacts and rollovers. This recommendation was closed based on a 1987 survey of NHTSA school bus manufacturers which indicated that the manufacturers would voluntarily implement the NTSB recommendation. Data indicate, however, that the school bus manufacturers did not voluntarily implement the NTSB recommendation.

NTSB believes there was a safety need for a requirement for a latching device because a 1987 NTSB study reported that seat cushions came loose in 16 of 44 school bus crashes. In four of the 16 crashes, all of the seat cushions came loose, and minor injuries were caused by the loose seat cushions in three of the 16 crashes. The NTSB concluded that seat cushions came free because clips were not secured to the seat frame or were loose and free to rotate. The 1987 report indicated the following safety concerns associated with loose cushions: Flying cushions can strike and injure occupants; occupants can fall through the opening left by the cushion; loose cushions may block exit routes; and loose cushions may hide injured occupants.

In the agency's school bus research program, seat cushions became detached in the frontal crash of a large school bus. To address the safety concerns raised by the NTSB, NHTSA is proposing to amend S5.1.5 to require latching devices for school bus seats that have latches that allow them to flip up or be removed for easy cleaning. We also propose a test procedure that would require the latch to activate after a 22 kg (48 lb) mass is placed on top of the seat at the seat cushion's center. The 48 lb weight is that of an average 6-year-old child. The test would ensure that any unlatched seat cushion would latch when a child occupant sits on the seat.

b. Additional Occupant Protection Requirements for Small School Buses (School Buses With a GVWR of 4,536 kg (10,000 lb) or Less)

• The agency proposes that small school buses be required to have lap/shoulder belts at all passenger seating positions. Since the FMVSSs were first promulgated, small school buses passenger seats have been required to have passenger lap belts (defined as Type 1 belts in FMVSS No. 209) as

[17] In Appendix A to this preamble, we list the FMVSSs affected by this NPRM and the proposed amendments to those standards.

[18] NHTSA Technical Analysis to Support Upgrading the Passenger Crash Protection in School Buses (September 2007).

specified in FMVSS No. 208, that meet the lap belt strength requirements specified in FMVSS No. 210. Lap belts were required because the ratio of the mass of a potential collision partner to that of a small school bus is larger than for a large school bus. Thus, for vehicle-to-vehicle collisions, the deceleration of a small school bus will be greater than for a large school bus. However, before today, we have never sought to require lap/shoulder belts for all passenger seats in small school buses.[19]

The primary reason for proposing lap/shoulder belts is the increased level of protection that children riding in a small school bus gain by having a lap/shoulder belt. Lap/shoulder belts provide an increased level of protection from lap belts by reducing the potential of head and neck injuries in frontal impacts. The relatively poor performance of lap belted dummies in NHTSA's frontal sled test research is of greater concern for small school buses. Frontal crashes will tend to be more severe for these smaller school buses than for large school buses. Properly worn lap/shoulder belts will reduce the potential negative effects of lap belts in severe frontal crashes while maintaining and potentially enhancing the protection offered in other crash modes. In NHTSA's 2002 Report to Congress, *School Bus Safety: Crashworthiness Research*, NHTSA noted that the results of the electronic data and video data showed that the dummies restrained with lap and shoulder belts had a lower risk of head and neck injuries than unbelted dummies.

Finally, while installation in large school buses could result in a 17 percent reduction in seating capacity, small school buses are already configured with seating positions that can accommodate lap/shoulder belts without a reduction in seating capacity.[20]

• *Adjustability of the belt system.* NHTSA proposes that requirements be added to FMVSS No. 210 that would ensure that the seat belt anchorages on school bus seats are designed so that the belt system will properly fit the range of children on a school bus: The average 6-year-old (represented by the Hybrid III 6-year-old child dummy (45 inches tall/52 pounds)); the average 12-year-old (represented by the Hybrid III 5th percentile female dummy (59 inches/108 pounds)) and; the large high school student (represented by the 50th percentile adult male dummy (69 inches/172 pounds)). Proper fit for children prevents injury and would ensure that the system performs properly in a crash. In addition, if the lap/shoulder seat belts did not fit the child occupant properly, there is an increased likelihood that the child would misuse the lap/shoulder belt system by placing the shoulder portion under the arm or behind the back. NHTSA's school bus research results showed that when the shoulder belt was placed behind the back, the restraint system functioned like a lap belt. Lap belts produced a higher risk of neck injury in the testing program.

In the agency's school bus research program, we saw examples of improper seat anchorage location. The first set of lap/shoulder belt seats supplied for testing in the school bus research program did not have the anchorages of the lap/shoulder belts located so that the seat belts would fit appropriately on any of the test dummies. The torso belt came across the dummies' heads and necks and the lap belt was high on the abdomen instead of on the hips. After consultation with the seat manufacturer, a second set of lap/shoulder belt equipped seats had seat belt anchorages such that the seat belts fit all of the test dummies (6-year-old to 50th percentile male) properly. The torso belt anchorage was higher on the seat back to allow for proper placement of the torso belt on taller people.[21] Also, as in the previously supplied seats, the shoulder belt had an adjustable anchorage that slides up and down a second shoulder belt so it could properly adjust for the sitting height of the typical 6-year-old through the adult size passenger.

NHTSA has tentatively determined that design requirements for the seat belt anchorages should be specified such that the belts would be sure to fit occupants ranging in size from the average 6-year-old child to the average adult male. The anchorage locations were determined by placing test dummies (6-year-old, 5th percentile female and 50th percentile male) into the school bus seats. The results are reported in NHTSA's Vehicle Research Test Center (VRTC) Test Report, *Test Methodology for Lap/Shoulder Belts in School Buses.* NHTSA has tentatively decided to apply the location requirements of FMVSS No. 210, S4.3.1. See Figure 1 of this preamble, below.

In addition, for the reasons discussed in the agency's technical report supporting this NPRM, we propose that school bus seats with lap/shoulder belts have a minimum shoulder belt adjustment range between 280 mm (11 inches) above the seating reference point and the school bus torso belt anchor point, to ensure that the shoulder belt will fit passengers ranging in size from a 6-year-old child to a 50th percentile adult male.

BILLING CODE 4910–59–P

[19] FMVSS No. 208 (S4.4.5) requires buses, other than school buses, with a GVWR of 10,000 lb or less manufactured on or after September 1, 2007 to have lap/shoulder belts (Type 2 belts) at all passenger seating positions other than side-facing positions. Today's NPRM would be consistent with that requirement for the non-school buses. (We note that the heading of S4.4.5 of FMVSS No. 208 should specify that the section does not apply to small school buses. See *http://dmses.dot.gov/docimages/pdf89/293807_web.pdf*, NHTSA letter February 19, 2004, explaining the typographical error. Today's NPRM would correct the typographical error in S4.4.5.)

[20] The typical seating configuration of small school buses is based on five rows of 762 mm (30 inches) two passenger seats. Therefore, the installation of lap/shoulder belts into each seating position should not result in a reduction in capacity.

[21] A torso belt anchorage located below the adult dummy's shoulder may increase the spinal compression loading in a crash, would increase the risk of the dummy sliding under the belt in a crash, and would increase the risk of spinal and abdominal injuries. The allowable location for the shoulder belt is specified in Figure 1 of the current FMVSS No. 210.

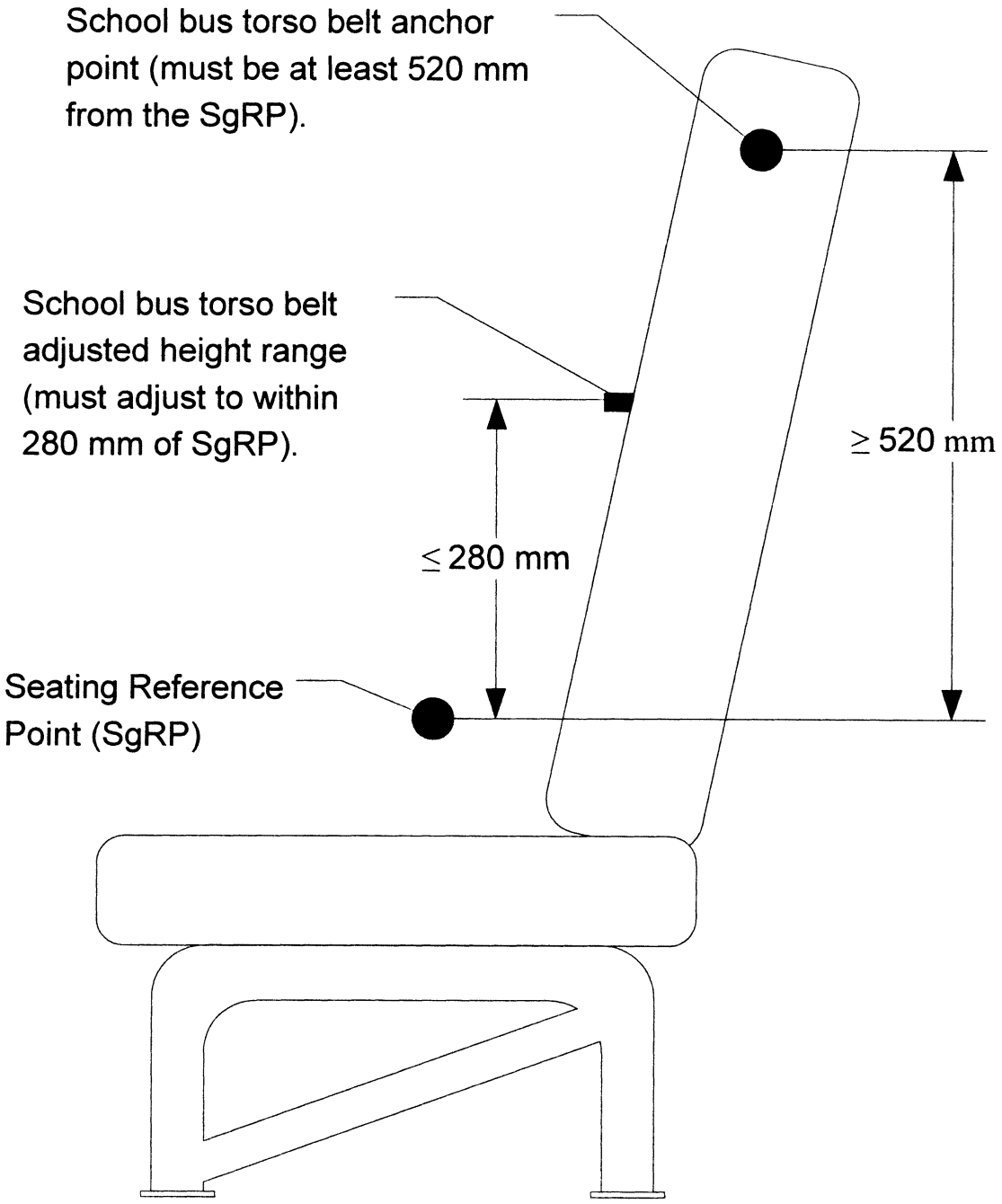

Figure 1 - Seat belt anchorage diagram.

BILLING CODE 4910–59–C

• The agency also proposes that the seat belt anchorages, both torso and lap, be required to be integrated into the seat structure. NHTSA proposes such integration because if we do not, we are concerned that some manufacturers could incorporate some seat belt anchorages into the bus floor, sidewall, or roof. Such installation into places other than the seat structure could potentially injure unbelted school bus passengers in a crash, or obstruct passengers during emergency egress. However, we seek comment on whether there are torso and lap belt anchorage designs available, other than integrated into the seat back, that would not impede access to emergency exits or become an injury hazard to unbelted passengers.

Improperly designed lap belts include those in which the buckle stalk is too long and the lap belt portion of the belt assembly rides high on the 6-year-old child's abdomen. For a proper fit, the lap belt portion must fit low across the hips so that the crash loads are distributed across the pelvis and not the abdominal area. Loading of the abdomen rather than the pelvis increases the risk of internal injuries caused by the seat belt penetration into the soft tissue of the abdomen.

We are aware that lap belts supplied to some states have a long buckle end

that causes the lap belt to not fit low across the hips of the passengers. The long buckle end also causes problems with securing child restraints.[22] However, our understanding is that long buckle ends have been provided out of a privacy concern about school bus personnel fastening lap belts near the crotch area of young passengers. Comments are requested on whether long buckle stalks should be retained on lap belts because of the privacy issues, even if the long buckle stalks may result in misplacement of the lap belt across the child's abdomen and difficulty in child restraint attachment.

• *Seat belt anchor strength for lap/shoulder belts.* Small school buses have been required to have lap belts since the issuance of FMVSS No. 222. The anchorages for these lap belts have had to be certified to FMVSS No. 210. Standard No. 210 specifies that for multiple seat belts anchored to the same seat, the belts are pulled simultaneously.

In today's proposal to require lap/shoulder belts in small school buses, we propose that small school buses should meet the existing small school bus anchorage strength requirements for lap/shoulder belts in FMVSS No. 210. Those existing strength requirements, specified in S4.2.2 for lap/shoulder belt anchorages, specify that the torso portion of the lap/shoulder belt be tested simultaneously with the lap belt portion at 13,344 N (3,000 pounds) each for each belt loop. For example, a three-position school bus seat is required to withstand an 80 kN (18,000 pound) test load. The calculation for the seat belt anchorage load requirement in a three passenger seat is (three times the shoulder belt plus three times the lap belt applied simultaneously) = $((3 \times 13{,}344\ N) + (3 \times 13{,}344\ N)) = 80{,}064\ N$ (18,000 pounds).

• *Seat belt retractors.* For school bus seat belts, there is at present no requirement for seat belt retractors. This is because the only seat belt systems currently installed in school buses are lap belts where retractors are not needed for the seat belt system to function properly. We propose to add a new section of regulatory text (S7.1.5 to FMVSS No. 208) to ensure that retractors are provided for school bus lap/shoulder seat belt assemblies, and that the retractors meet the same requirements as seat belt retractors for passenger cars, trucks and multipurpose passenger vehicles.

• *Maximum number of lap/shoulder seat belts and minimum seat width.* In S4.1 of FMVSS No. 222, NHTSA currently considers the number of seating positions on a bench seat to be the width of the bench seat in millimeters (W), divided by 381 and rounded to the nearest whole number. This W value is used to calculate the compartmentalization requirements for seat backs on all school buses and the number of lap belt only seating positions that must meet the provisions of FMVSS No. 208 and 210 for small school buses. The agency will continue to consider W to be the number of seating positions per bench seat with optional provided lap belts on large school buses as well as the compartmentalization requirements for all school buses, except that the divisor will be 380 rather than 381. (Using 380 instead of 381 would just be for simplicity.) However, for the seating positions on small school buses with required lap/shoulder belts and on large school buses with optional lap/shoulder belts, we are defining the number of seating positions (Y) in a slightly different way. Y is the total seat width in millimeters divided by 380, rounded down to the nearest whole number. Under the definitions of W and the proposed definition of Y, a 1,118 mm (44 inch) wide seat would have W = 3 seating positions for the purposes of calculating the magnitude of the compartmentalization requirements to apply to the seat back, but only Y = 2 seating positions for determining the lap/shoulder belts installed on the seat.[23] The result of this ''Y'' calculation would be that each passenger seating position in a school bus seat with a lap/shoulder belt would have a minimum seating width of 380 mm (15 inches). A proposed minimum seating position width of 15 inches for seats with lap/shoulder belts is needed because school buses are typically purchased based on maximum seating capacity, and we seek to ensure that manufacturers will not install lap/shoulder belt anchorages that are so narrowly spaced that they would only fit the smallest occupants.

• *FMVSS No. 207, Seating Systems.* At present, FMVSS No. 207 specifically excludes all bus passenger seats from its general performance requirements. FMVSS No. 207 tests the forward strength of the seat attachment to the vehicle by replicating the load that would be applied through the seat center of gravity by inertia in a 20 g vehicle deceleration. If seat belt anchors are attached to the seat, FMVSS No. 207 requires that the FMVSS No. 210 anchorage load be applied at the same time the FMVSS No. 207 inertial load is applied. Both loads are applied simultaneously because during a crash, the seat with an integrated seat belt (such as the seat in a school bus) will have to sustain the loading due to both the seat mass and the seat belt load from the restrained occupant.

The agency is proposing to apply FMVSS No. 207 to small school buses with lap/shoulder belts because the load imposed by FMVSS No. 207 appears to be greater than the load that would be imposed by FMVSS No. 222's seat performance requirements (S5.1.3). If we assume a seat mass of 35 kg (77 pounds),[24] the FMVSS No. 207 load would be 6,867 N (1,544 pounds). For a school bus seat with two seating positions, the FMVSS No. 210 load would be a total of 53,376 N (12,000 pounds). So if FMVSS No. 207 were applied it would add 12 percent $[((53{,}376\ N + 6{,}867\ N)/53{,}376\ N) - 1)]$ to the total load. This would result in a more stringent test procedure. Comments are requested on whether FMVSS No. 207 should be applied to small school bus passenger seats.

• A newly-developed ''quasi-static'' test requirement would apply to test school bus seats with lap/shoulder belts to ensure that the top of the seat back incorporating the seat belt anchorage does not pull too far forward due to the torso belt loading of the belted occupant and jeopardize the protection of unbelted passengers to the rear of the belted occupants. The quasi-static test is discussed in the next section. The quasi-static test requirements would be in addition to existing compartmentalization requirements for seat performance (e.g., seat performance forward, S5.1.3 of FMVSS No. 222, and seat performance rearward, S5.1.4), and would be in addition to the FMVSS No. 210 test for the seat belt anchorages, and would be in addition to the FMVSS No. 207 test. A new school bus seat (test specimen) would be used for each of these tests.

c. Additional Occupant Protection Requirements for Large School Buses With Voluntarily-Installed Lap/Shoulder Seat Belts

• Large school buses with voluntarily-installed lap/shoulder seat belts would be subject to the

[22] The short buckle length is recommended in NHTSA's pamphlet on the Proper Use of Child Safety Restraint Systems in School Buses. *http://www.nhtsa.dot.gov/people/injury/buses/busseatbelt/index.html.*

[23] ''Y'' would also be used to determine the loads to be applied to the shoulder belts for the quasi-static test, discussed below in this preamble. See also paragraphs S5.1.6.5.5(a) and (b) of the proposed regulatory text.

[24] A 991 mm (39 inch) wide C.E. White seat weights 34.5 kg (76 pounds). See *www.cewhite.com/cr-series-prod_info.html.*

requirements described above for lap/shoulder belts on small school buses, except FMVSS No. 207 would not apply to the passenger seats,[25] and as explained in the next section, the quasi-static test procedures for small school buses would slightly vary from those applying to seats on large school buses with voluntary lap/shoulder belts, to account for the relative severity of the anticipated frontal crash conditions for each school bus type.

The agency proposes that for large school buses with voluntarily installed lap/shoulder seat belts, the FMVSS No. 210 anchorage strength requirement should be identical to the requirements for passenger seat belt anchorages in smaller vehicles. We are not aware of any practicability concerns with meeting such anchorage strength requirements since the proposed level of performance for large school buses is already required of all other vehicles to which FMVSS No. 210 applies. For lap/shoulder belts, the torso and body blocks will be pulled at 13,334 N (3,000 pounds).

However, the agency recognizes that large school bus vehicles experience lower crash forces in the passenger compartment than do small school buses and other passenger motor vehicles. Part of the reason for the difference in crash deceleration is that the large bus body is designed to slide relative to the underlying frame as observed in the frontal barrier crash test. Specifically, the large school bus experienced about 12–13 g peak deceleration during a 48.3 km/h (30 mph) frontal crash into a rigid barrier, compared to about 25 g for a small school bus. In real world vehicle-to-vehicle crashes, large school buses will also experience lower crash forces than would a small school bus in a similar crash. This difference is due to the greater mass of the large bus and consequent lower change in crash forces.

During the development of this NPRM, NHTSA measured the dynamic loads to the seat belt anchorages on lap/shoulder belt-equipped two-passenger school bus seats from C.E. White Corporation and IMMI during crash simulation sled testing. The forces on the seat anchorages were measured using load cells attached to the sled buck and the attachment locations of the seat structure. The test was conducted using the 48.3 km/h (30 mph) school bus crash pulse that was used in the school bus research program. The seats had two 50th percentile adult male dummies restrained in lap/shoulder belts and two unbelted 50th percentile adult male dummies that struck the seat back.

The total loads for both seating positions transmitted from the lap/shoulder belts, through the seat structure and anchorages to the floor for each seat are shown in Figures 2 and 3 for the C.E. White and IMMI seats, respectively. The highest loads experienced by the C.E. White seats revealed that the force was approximately 17,500 N (3,934 pounds) per seating position.

[25] The agency does not believe there is a need to apply FMVSS No. 207 to large school buses that do not have seat belts because the load imposed by 207 appears to be lower than the load that would be imposed by FMVSS No. 222's seat performance requirements (S5.1.3). Under FMVSS No. 222, there are two forward forces applied to the seat back, by a lower bar and an upper bar. The lower bar force has a maximum value of 3,114 N (700 pounds) times the number of seating positions. In the seat performance (forward strength) test, after its initial application, the lower bar load is then reduced by half, and then the loading bar is locked in place. Following this, the upper loading bar is applied. The upper loading bar force must stay in a force deflection curve that has a minimum value of 4,448 N (1,000 pounds) and a maximum of 10,676 N (2,400 pounds) once the loading bar displaces more than 127 mm (5 inches). If we assume a load in the middle of the force/deflection range, the total forward force on the seat back is 7,562 N (1,700 pounds). In comparison, if we assume a seat mass of 35 kg (77 pounds), the FMVSS No. 207 inertial loading applied to this school bus seat would be 6,867 N (1,544 pounds). Thus, the FMVSS No. 222 forward seat strength loads for a large school bus are a reasonable substitute for the FMVSS No. 207 inertial loads. Likewise, the agency does not believe there is a need to apply FMVSS No. 207 to large school buses that do have seat belts. The agency is proposing FMVSS No. 210 seat belt anchorage loads for large school buses, and has found that the proposed loads are in excess of peak loads that were applied to the attachment of the seat to the sled test fixture in a 12 to 13 g sled test simulating a large school bus barrier crash. Thus, this load measurement captured the inertial loading of the seat. It can therefore be argued that for large school bus seats, the proposed FMVSS No. 210 anchorage loading would exceed loading that incorporates the seat inertial loading, albeit at a lower deceleration level than the 20 g value required by FMVSS No. 207.

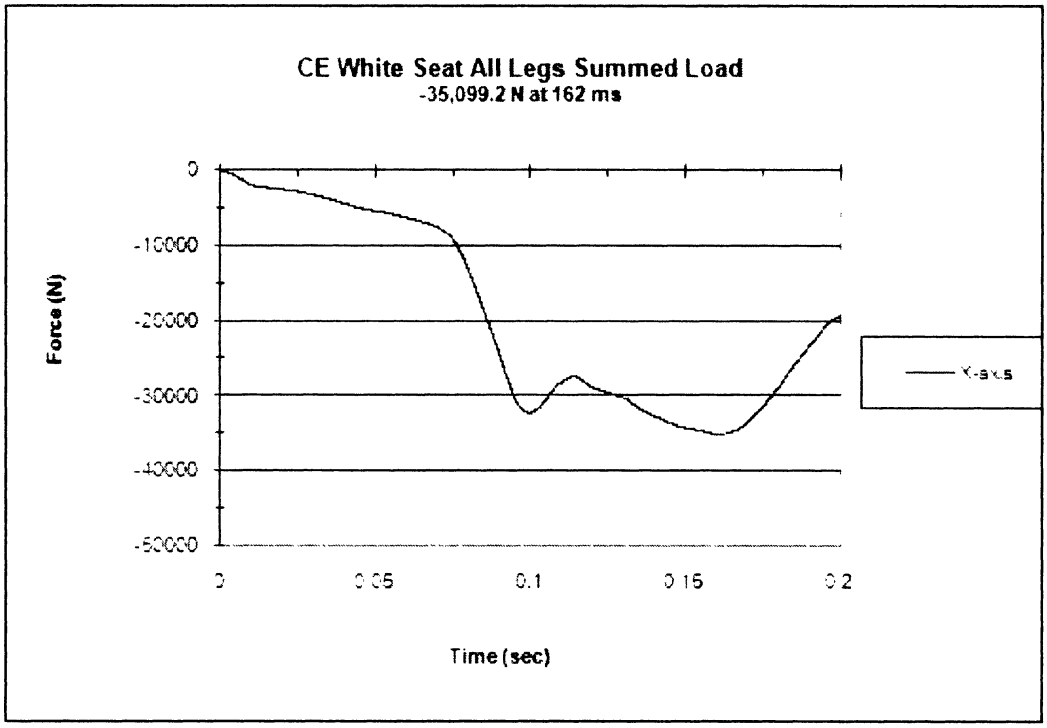

Figure 2. Force on C.E. White seat anchorages

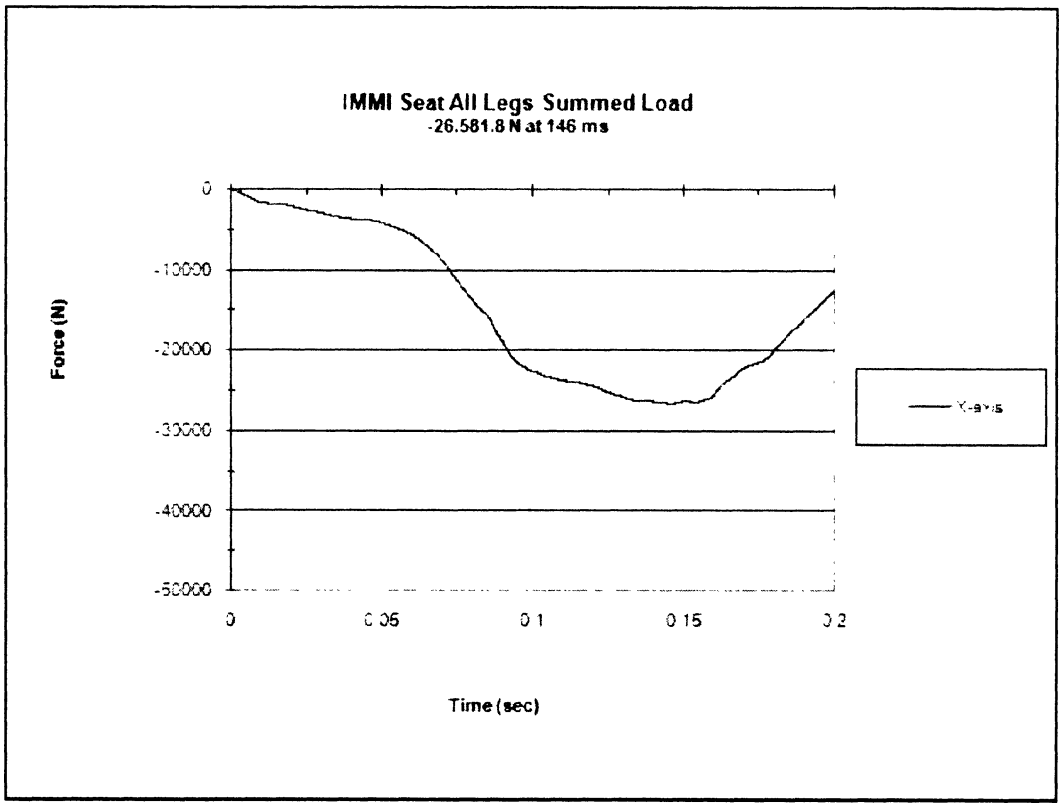

Figure 3. Force on IMMI seat anchorages

This testing suggested that the total peak dynamic loading sustained by the seat belts was about ⅔ of that applied in FMVSS No. 210. Notwithstanding the above data, the agency believes that the anchorage strength provided by FMVSS No. 210 provides the foundation for seat belt performance and there is value in maintaining consistency in this foundation. We understand that this higher factor of safety may result in seats and anchorages being constructed with heavier materials and may in turn increase the weight and cost of providing seat belts on large school buses. However, it is also possible that those putting seat belt anchorages on large school buses may use existing designs for small school buses that have always needed to meet the same strength level that is now being proposed for large school buses.

We request comment on the strength levels being proposed for large school buses in FMVSS No. 210. Would it be appropriate to reduce the strength level since the crash environment for large school buses will likely be less severe than for small school buses? How much could the load be reduced and still provide an appropriate safety margin in a variety of crash scenarios? What would be the cost and weight savings associated with a lesser requirement?

d. Additional Requirements for Large School Buses With Voluntarily-Installed Lap Belts

New large school buses with voluntarily-installed lap belts would be required to meet the requirements described in subsection (a) of this section of the preamble, and the requirements proposed in this paragraph. This NPRM proposes that seat belt anchorages would have to meet FMVSS No. 210 requirements of a loading force of 22,240 N (5,000 pounds) per seating position. This would be consistent with the existing lap belt loading requirement for small school buses and light vehicles with lap belt only systems.

VII. Quasi-Static Test for Lap/Shoulder Belts on Small and Large School Buses

The agency has developed a quasi-static test procedure for lap/shoulder belt-equipped seats in school buses and proposes to apply this test to small and large school buses equipped with lap/shoulder belts. The test is intended to address possible safety problems caused by having both belted and unbelted passengers on the same school bus. School bus seats designed to provide compartmentalized protection must contain the child between well-padded seat backs that provide controlled ride-down in a crash. A school bus seat with a lap/shoulder belt would have the torso (shoulder) belt attached to the seat back. In a crash involving a belted child and an unbelted child aft of the belted occupant, the seat back would be subject to consecutive force applications from the belted occupant's torso loading the seat back *and* the force generated by impact of the unbelted passenger. The quasi-static test replicates this double-loading scenario and specifies limits on how far forward the seat back may displace. The test helps ensure that the top of a seat back does not pull too far forward and jeopardize the protection of compartmentalized passengers to the rear of the belted occupants, or diminish the torso restraint effectiveness for lap/shoulder belted occupants.[26]

The agency developed the quasi-static test by performing a sled test using the same large school bus crash pulse that was used in the school bus research program. We measured the loads on the shoulder belts and both lower parts of the lap belt. Two unbelted 50th percentile male dummies were positioned behind the seat that contained two restrained 50th percentile male dummies. Visual observation of seat kinematics and load cell data produced by the shoulder belts from this test revealed the following sequence of events:

1. The knees of the unbelted dummy to the rear struck the back of the forward seat, causing some seat back deflection.
2. The shoulder belt was loaded by the restrained dummy in the forward seat.
3. The shoulder belt load was reduced as the seat back to which it was attached deflected forward.
4. The shoulder belt loads reduced to approximately zero when the unbelted dummies' chests struck the forward seat back.
5. The forward seat back deflected further forward as the energy from the unbelted dummies was absorbed.

This crash scenario is replicated in the quasi-static test. The load requirement for the quasi-static test is dependant upon the number of seating positions and also the likely seat capacity. A seat that has the minimal allowed overall seat width for either a two or three occupant seat will have a reduced loading requirement from other seats.[27] The agency is proposing that a 5,000 N (1,124 pounds) load per occupant be applied in the quasi-static test; however, seats with a minimal allowed overall seat width would have a 3,300 N (750 pounds) load per occupant applied.[28]

The reason for the reduced load requirement for the minimal width seats is that students at the 50th percentile male or larger size would not be able to simultaneously occupy each of the seating positions. For example, a 45 inch seat would have a seating capacity of three, or the minimum allowed overall seat width for a three occupant seat. However, a common practice used for the seating configuration in large school buses to be equipped with lap/shoulder belts has been to install a 1,143 mm (45 inches) three position seat on one side of the aisle and a 762 mm (30 inches) two position seat on the other side of the aisle in each row of the bus. To accommodate students larger than the 5th percentile female, schools typically seat two persons in the 1,143 mm (45 inches) seat and one person in the 762 mm (30 inches) seat. Because the seat width is not sufficient to accommodate the 50th percentile occupants at the full seating capacity (i.e., three in the 1,143 mm and two in the 762 mm seats), we are proposing that the quasi-static torso belt test have a reduced load.[29]

We believe that if the seat has the minimal allowed overall seat width it is reasonable to reduce the total torso belt loading applied to the seat in the quasi-static test to a per occupant value below the loading applied for larger seating width, since larger occupants would not occupy those seats to the full seating capacity. To estimate the appropriate load value, we assume the worst case loading condition is approached when

[26] A quasi-static test was developed and is being proposed instead of a dynamic test because school bus manufacturers are familiar with quasi-static testing. The existing requirements in FMVSS No. 222 use a quasi-static test (the current compartmentalization seat performance requirements in S5.1.3) to assess the capability of the school bus seat to provide protection in a frontal crash. The agency believes that by using a quasi-static procedure for testing school bus seats, manufacturers would be able to test a large number of seats and a variety of design configurations without incurring the delay and additional cost of sending each configuration to an outside testing facility.

[27] A school bus bench seat has the minimum allowed overall width if the total seat width in millimeters minus 380Y is 25 mm (1 inch) or less.

[28] Based on the assumption of a 5th percentile female occupant in a seating position as opposed to a 50th percentile male, we tentatively conclude that the proposed torso body block pull should be reduced in that situation to 3,300 N (750 pounds) from 5,000 N (1,124 pounds) or by approximately the same percentage as the ratio of the mass of a 5th percentile female to that of a 50th percentile male, i.e., 65 percent [48 kg/74 kg].

[29] We note that the total loading applied for a 45 inch seat under this proposal would be 9,900 N (3,300 N × three 5th percentile occupants) as compared to 10,000 N if it were tested for two 50th percentile occupants. A 30 inch seat would have a total load of 6,600 N (3,300 N × two 5th percentile occupants) rather than 5,000 N total load if one 50th percentile occupant were seated in the seat.

every seating position is occupied by a child as large as a 5th percentile adult female.[30]

We also believe the proposed loading requirements are practicable. Testing at NHTSA's Vehicle Research Test Center revealed that existing lap/shoulder belt equipped seats could meet a torso body block pull of 3,300 N (750 pounds) per occupant.[31] NHTSA in-vehicle testing at MGA Research Corporation of three-position, 1,143 mm (45 inches) seats with lap/shoulder belts in a large school bus, also revealed that these seats would pass the quasi-static test.[32]

For small school buses, this NPRM proposes that a 7,500 N (1,686 pounds) load per occupant be applied in the quasi-static test; however, seats with a minimal allowed overall seat width would have a 5,000 N (1,124 pounds) load per occupant applied. As explained in NHTSA's ''Technical Analysis to Support Upgrading the Passenger Crash Protection in School Buses,'' the torso belt loads are higher than for large school buses because small school buses experience higher crash accelerations than large school buses.

a. Stage 1: Torso Belt Anchorage Displacement

This part of the quasi-static test replicates steps 1 and 2 of the crash scenario above. The proposed procedure uses the knee and top loading bars that are currently specified in S5.1.3 of FMVSS No. 222 (seat back strength), which replicate a passenger's knee and torso loading the forward seat back[33] and the FMVSS No. 210 upper torso body block.[34] The test procedure uses the bottom loading bar to replicate the knee loading by the unbelted rear passengers (based on W), then specifies a pull test on the shoulder belts at each seating position in the seat to replicate loading of the shoulder belt by the belted passengers (based on Y). Under the proposed test procedure, the large school bus shoulder belts would be pulled using the upper torso body block specified in Figure 3 of FMVSS No. 210 with a force of 5,000 N (1,124 pounds) at each seating position for large school buses, and a force of 7,500 N (1,686 pounds) for small school buses.[35] The proposed rule (S5.1.6.5.4) includes a very specific procedure for positioning the torso body block. The torso body block force would be applied in not less than 5 and not more than 30 seconds. We found that an applied load of 5,000 N (1,124 pounds) for large school buses was necessary to replicate the torso belt loading from the sled test and to get the similar seat response observed from high speed video. This is slightly higher than twice the highest reading of the shoulder belt load cell (2,161 N). For small school buses, a higher force is proposed because the small school bus crash pulse has twice the peak acceleration of the large school bus, i.e., approximately 25 g.[36]

At this mid-point of the quasi-static test when the torso block force is being applied, NHTSA would measure displacement of the torso belt anchorages. The criterion for passing this part of the test is that the torso belt anchorages must not displace forward more than a specified value. The value is a function of the vertical location of the anchorage and the angle of the seat back surface that compartmentalizes the occupants rearward of the seat being tested, i.e., the posterior surface of the seat back.

Basically, for large school buses, the allowable displacement is equivalent to the amount of displacement that would result from the seat back deflecting forward 10 degrees past a vertical plane.[37] For large school buses, we propose that θ (theta) in the equation below be limited to 10 degrees as shown in Figure 9 of the proposed regulatory text. Thus, the total allowable forward horizontal displacement for large school buses would be:

Large School Bus Displacement Limit = $(AH + 100)(\tan\theta + 0.174/\cos\theta)$ mm.

For small school buses, the displacement limit would be equivalent to the amount of displacement resulting from a seat back deflecting forward 15 degrees past a vertical plane. The displacement limit would be determined using the equation:

Small School Bus Displacement Limit = $(AH + 100)(\tan\theta + 0.259/\cos\theta)$ mm.

The allowed displacement for small school buses is greater than the limit for large school buses to account for our concerns about practicability of small school buses meeting the displacement criterion.

As noted above, the goal of the torso belt anchorage displacement criterion is two-fold. The first goal is to assure that the seat back to which the torso belt is anchored has sufficient strength to restrain and protect the belted occupant in a frontal crash. The second goal is to assure that the seat back is still in a sufficiently upright position to compartmentalize unbelted occupants to the rear. Thus, we believe that the displacement limit should be narrow, to ensure that seat backs deviate as little as possible from the initial upright position.

b. Stage 2: Energy Absorption Capability of the Seat Back

The quasi-static test continues with procedures to replicate steps 3, 4 and 5 of the crash scenario above. After the torso anchorage displacement is measured, the torso body block load is released. Immediately after this load is released, forward load is applied to the seat back through the top loading bar. The seat back must be able to absorb the same amount of energy per seating position (452 joules (4,000 in-pounds)) as is required of a seat back under the compartmentalization requirement. However, for this quasi-static test, the seat back need not perform such that the top loading bar force must stay in the force/deflection corridor specified for the compartmentalization requirement.[38] This is because the torso body block load may have generated stresses in the seat frame that exceed the

[30] Of course, the seat could be used by occupants of other sizes and in other combinations. For example, two 50th percentile male occupants might occupy the outboard seating positions in a three position, 1,143 mm (45 inch) seat or a 50th percentile male and a smaller child might occupy a two seating position, 762 mm (30 inch) seat. However, we believe the loading applied by other occupant combinations will not result in drastically higher loading applied to the seat through the seat belts.

[31] VRTC testing determined that the 1,143 mm (45 inch), three position seat and a 762 mm (30 inch), two position seat would collapse during the quasi-static test when a torso body block load of 5,000 N (1,124 pounds) at each seating position was used.

[32] Research Testing For FMVSS No. 222, School Bus Passenger Seating and Crash Protection, Report No. 222R–MGA–2007–001, September 2006, MGA Research Corporation.

[33] The current knee loading test procedure requires that initially a force of 3,114 N (700 pounds) times the number of seating positions in the test seat (w) be applied to the seat back within 5 and not more than 30 seconds, and then the force is reduced to 1,557 N (350 pounds) times w. The knee loading bar is locked in this position for the remainder of the test. The current top loading test procedure requires an additional force through the top loading bar until 452 joules (4,000 inch-pounds) times w of energy is absorbed by the seat back.

[34] The agency is considering a rulemaking that would replace the torso body block in FMVSS No. 210 with an updated force application device. If the upper torso body block in FMVSS No. 210 is changed, the body block discussed in this quasi-static procedure proposed today may be changed to the new force application device as well.

[35] As discussed earlier in this section, these 5,000 N (1,124 pounds) and 7,500 N (1,686 pounds) values would be reduced depending on the width of the seat.

[36] The rational for the load application is explained in the agency's Technical Analysis.

[37] The derivation of the equation defining this displacement limit is explained in the agency's Technical Analysis.

[38] A separate FMVSS No. 222 forward loading test is still performed on a different test specimen, one that was not subjected to the quasi-static test, to assure that in a crash, if the seat were not occupied by a belted passenger and it were impacted by an unbelted rearward passenger, the seat would meet the force/deflection corridor.

elastic limit of the material and result in residual strain. The seat back would still need to have the capability to absorb 452 joules of energy from the unbelted rear occupant, but the manner of absorbing the energy would not be as controlled as when impacting a seat back that had not been subjected to the previous loading from the seat belts.

c. Request for Comments

- We note that in the above quasi-static procedure, no load is applied through the pelvis body block. This is because a visual assessment showed the desired seat response could be achieved with just the torso body block load. Also, a main focus of the test is to assure that the top of the seat back does not pull too far forward and jeopardize the protection of compartmentalized passengers to the rear of the belted occupants. The agency seeks comment on whether the quasi-static test should apply a pelvis block loading.
- The agency also seeks comment on the proposal to have a more rigorous quasi-static seat test for small school buses than for large school buses. We also seek comment on the appropriate level of the torso block loading to be applied during the test and allowable anchorage displacement. Would it be appropriate and reasonable to impose the same displacement limit as is being proposed for large school buses?
- Comments are requested on the validity of the assumption that the timing of the seat loading is such that the seat belt loading will essentially be finished before the upper part of the seat back is loaded by the rear compartmentalized dummy.
- The agency also seeks comment on the proposed procedure (see S5.1.6.5.4 of the proposed rule) for positioning the torso block. Is the proposed procedure sufficiently clear? Are there ways to improve the clarity of the test procedure?

VIII. Lead Time

If the proposed changes in this NPRM are made final, NHTSA proposes a one year lead time for school bus manufacturers to meet the new minimum seat back height (24 inches), seat cushion test and barrier requirements for all school buses, since there is limited or no development necessary for these changes.

We note that lap/shoulder belts are currently available from two suppliers. We are aware of at least one school bus manufacturer (Collins) that is already manufacturing its own lap/shoulder belt seats. We further propose a one year lead time for meeting requirements for voluntarily installed seat belts in large school buses and a three year lead time for meeting mandatory installation in small school buses. We believe three years are necessary for small school buses since some design, testing, and development will be necessary to certify compliance to the new requirements. Nothing in this NPRM proposes to require that large school buses be fitted with seat belt anchorages, with lap belts, or lap/shoulder belts.

If the proposed changes in this NPRM are made final, NHTSA proposes that optional early compliance be permitted.

IX. Rulemaking Analyses and Notices

Executive Order 12866 and DOT Regulatory Policies and Procedures

This rulemaking document was not reviewed by the Office of Management and Budget under E.O. 12866 and is not considered to be significant under E.O. 12866 or the Department's Regulatory Policies and Procedures (44 FR 11034; February 26, 1979). NHTSA has prepared a preliminary regulatory evaluation (PRE) for this NPRM.[39]

This NPRM proposes: (a) For all school buses, to increase seat back height from 20 inches to 24 inches, and to require a self-latching mechanism for seat bottom cushions that are designed to flip-up [40]; and (b) for small school buses (GVWR of 4,536 kg (10,000 lb) or less, require lap/shoulder belts instead of just lap belts. The belt systems would be required to meet specifications for retractors, strength, location and adjustability. Seat backs with lap/shoulder belts would be subject to a quasi-static test so that the seat backs are strong enough to withstand the forces from a belted passenger and force imposed on the seat from unbelted passenger seated behind rear the belted occupant. This NPRM also proposes: (c) Performance requirements for voluntarily-installed seat belts on large (over 4,536 kg (10,000 lb)) school buses. For large school buses with voluntarily-installed lap/shoulder belts, the vehicle would be subject to the requirements described above for lap/shoulder belts on small school buses, except that applied test forces and performance limits would be adjusted so as to be representative of those imposed on large school buses. Large school buses with voluntarily-installed lap belts would be required to meet anchorage strength requirements. This NPRM does not require seat belts to be installed on large school buses. The proposed performance requirements for seat belts on large school buses affect large school buses only if purchasers choose to order seat belts on their vehicles.

School Bus Fleet 2007 Fact Book on U.S. school bus sales for the sales years 2001–2005 reports that for each of these years on average, approximately 40,000 school buses were sold. NHTSA estimates that of the 40,000 school buses sold per year, 2,500 of them were 10,000 pounds GVWR or under. The other 37,500 school buses were over 10,000 pounds GVWR. Four states currently require high back seats (Illinois, New Jersey, New York, and Ohio). These states have 21.7 percent of the sales. Thus, the high back seat incremental costs apply to 78.3 percent of these sales or 1,958 buses that are 10,000 pounds GVWR or under and 29,362 buses that are over 10,000 pounds GVWR.

Small School Buses

NHTSA estimates that the costs of this rulemaking would be the incremental cost of the higher (24 inch) seat back ($45 to $64 per small school bus for 78.3 percent of the fleet) plus the incremental cost for lap/shoulder belts over lap belts of $1,121 to $2,417. This would be a total incremental cost per school bus of $1,166 to $2,481 per bus for those states without high back seats. If it is assumed that in a given year, 2,500 small school buses are sold, for all small school buses, the total incremental costs of this rulemaking are estimated to be from $2,889,000 ($45 × 1,958 + $1,121 × 2,500 small school buses) to $6,167,000 ($64 × 1,958 + $2,417 × 2,500 small school buses).

The estimated benefits resulting from the higher seat backs and lap/shoulder belts on small school buses is, per year, 37.2 fewer injuries, and 0.4 fewer fatalities.

Large School Buses

Costs of Higher Seat Backs on Large School Buses—If this NPRM were made final, all large school buses would be required to have the higher seat backs of 24 inches. NHTSA estimates the cost per large school bus of the higher seat back to be $125. If this NPRM were made final, NHTSA estimates that the total costs of the higher seat backs on large school buses to be $3,680,000 (29,362 large school buses times $125.40).

[39] NHTSA's preliminary regulatory evaluation (PRE) discusses issues relating to the potential costs, benefits and other impacts of this regulatory action. The PRE is available in the docket for this NPRM and may be obtained by contacting Docket Management at the address or telephone number provided at the beginning of this document.

[40] The agency estimates that a self-latching mechanism on flip-up seat bottoms would cost less than $3 per seat, or $66 per bus. This cost was not included in the estimates given below. Comments are requested on the number of school buses and school bus seats affected by the seat latching requirement.

Benefits of Higher Seat Backs on Large School Buses—If this NPRM were made final, the benefits from higher seat backs on large should buses is estimated to be 29.6 fewer injuries per year, and 0.2 fewer fatalities per year.

Costs and Benefits of Performance Requirements for Voluntarily-Installed Belts on Large School Buses—As earlier noted, nothing in this rulemaking would require any party to install lap or lap/shoulder belts at passenger seating positions in large school buses. Instead, this rulemaking would specify performance requirements that voluntarily-installed lap or lap/shoulder belts at passenger seating positions must meet. Lap or lap/shoulder belts that are now installed in large school buses would be affected by this rulemaking, in that the voluntarily-installed belt systems would be subject to the performance requirements set forth in this NPRM whereas currently the systems are not subject to any Federal standard. The agency is unable to estimate the costs and benefits of this part because not enough is known about the requirements that state and local authorities now specify for the performance of seat belt systems on large school buses. Comments are requested on the added costs that would result from the belt systems having to meet the performance requirements specified in this NPRM.

Overview of Costs and Benefits

Costs of High Back Seats and Lap/Shoulder Belts for Small School Buses, and of High Back Seats for Large School Buses

Small School Buses: Adding together the high back seat incremental cost of $45 to $64 to the incremental cost for lap/shoulder belts over lap belts of $1,121 to $2,417, results in a total incremental cost of $1,166 to $2,481 per bus.

Large School Buses: The incremental cost for high back seat is estimated to be $125 per bus.

TABLE 1.—TOTAL COSTS (PER BUS AND FOR THE FLEET)

[$2006]

	Large buses	Small buses	Small buses
	66 passenger	14 Passenger	20 Passenger.
Per Bus Costs	$125	$1,166	$2,481.
Annual Fleet Costs	$3.7 million	$2.9 million	$6.2 million.
Combined Annual Fleet Costs	$6.6 to $9.9 Million.		

Benefits of High Back Seats and Lap/Shoulder Belts for Small School Buses, and of High Back Seats for Large School Buses

The benefits of the proposal for small school buses and large school buses are estimated as shown below in Table 2:

TABLE 2.—TOTAL BENEFITS

	Small school bus		Large school bus		Total	
	Injuries	Fatalities	Injuries	Fatalities	Injuries	Fatalities
High Back Seat	Combined below[1]		30	0.2	30	0.2
Lap/Shoulder Belts	37	0.4	n.a.	n.a.	37	0.4
Total	37	0.4	30	0.2	67	0.6

[1] We did not have test data to allow us to separate out the high back seats from lap/shoulder belts for small school buses; thus, these data have been combined.

Regulatory Flexibility Act

Pursuant to the Regulatory Flexibility Act (5 U.S.C. 601 *et seq.*, as amended by the Small Business Regulatory Enforcement Fairness Act (SBREFA) of 1996), whenever an agency is required to publish a notice of rulemaking for any proposed or final rule, it must prepare and make available for public comment a regulatory flexibility analysis that describes the effect of the rule on small entities (i.e., small businesses, small organizations, and small governmental jurisdictions). The Small Business Administration's regulations at 13 CFR part 121 define a small business, in part, as a business entity ''which operates primarily within the United States.'' (13 CFR § 121.105(a)). No regulatory flexibility analysis is required if the head of an agency certifies that the rule will not have a significant economic impact on a substantial number of small entities. The SBREFA amended the Regulatory Flexibility Act to require Federal agencies to provide a statement of the factual basis for certifying that a rule will not have a significant economic impact on a substantial number of small entities.

NHTSA has considered the effects of this rulemaking action under the Regulatory Flexibility Act. According to 13 CFR Section 121.201, the Small Business Administration's size standards regulations used to define small business concerns, school bus manufacturers would fall under North American Industry Classification System (NAICS) No. 336111, *Automobile Manufacturing,* which has a size standard of 1,000 employees or fewer. Using the size standard of 1,000 employees or fewer, NHTSA estimates that there are two small school bus manufacturers in the United States (U.S. Bus Corp. and Van-Con). NHTSA believes that both U.S. Bus Corp and Van-Con manufacture small school buses and large school buses.

I hereby certify that if made final, this proposed rule would not have a significant economic impact on a substantial number of small entities. If this NPRM were made final, the small businesses manufacturing small buses would incur incremental costs ranging from a low of $1,166 to $2,481 per small school bus, out of a total cost of $40,000 to $50,000 per small school bus. The small businesses manufacturing large school buses would incur incremental costs of $125 per school bus (out of a total of more than $70,000) for the costs of the higher seat backs. The costs of lap/shoulder belts on large school buses is not a factor, as nothing in this NPRM would require lap/shoulder belts or lap belts at passenger seating positions in large school buses.

The relatively minimal additional costs outlined above for large and small school buses would be passed on to school bus purchasers. Those purchasers are required to be sold school buses if they purchase a new bus, and to use school buses. Thus, small school bus manufacturers would not lose market share if the changes proposed in this NPRM were made final. While small organizations and governmental jurisdictions procuring school buses would be affected by this rulemaking in that the cost of school buses would increase, the agency believes the impacts on these entities would not be significant.

Executive Order 13132

NHTSA has examined today's NPRM pursuant to Executive Order 13132 (64 FR 43255, August 10, 1999). On July 11, 2007, NHTSA held a public meeting bringing together a roundtable of state and local government policymakers, school bus manufacturers, pupil transportation associations and consumer groups to discuss the safety, policy and economic issues related to seat belts on school buses (see NHTSA Docket 28103). No additional consultation with States, local governments or their representatives is contemplated beyond the rulemaking process. Further, the agency has concluded that the rulemaking would not have federalism implications because it would not have ''substantial direct effects on the States, on the relationship between the national government and the States, or on the distribution of power and responsibilities among the various levels of government.'' This proposal would specify performance requirements for seat belts voluntarily installed on large school buses, but does not propose to require the belts on the large buses.

Further, no consultation is needed to discuss the preemptive effect of today's rulemaking. NHTSA rules can have preemptive effect in at least two ways. First, the National Traffic and Motor Vehicle Safety Act contains an express preemptive provision: ''When a motor vehicle safety standard is in effect under this chapter, a State or a political subdivision of a State may prescribe or continue in effect a standard applicable to the same aspect of performance of a motor vehicle or motor vehicle equipment only if the standard is identical to the standard prescribed under this chapter.'' 49 U.S.C. 30103(b)(1). It is this statutory command that preempts State law, not today's rulemaking, so consultation would be inappropriate.

In addition to the express preemption noted above, the Supreme Court has also recognized that State requirements imposed on motor vehicle manufacturers, including sanctions imposed by State tort law, can stand as an obstacle to the accomplishment and execution of a NHTSA safety standard. When such a conflict is discerned, the Supremacy Clause of the Constitution makes their State requirements unenforceable. See Geier v. American Honda Motor Co., 529 U.S. 861 (2000). NHTSA has not outlined such potential State requirements in today's rulemaking, however, in part because such conflicts can arise in varied contexts, but it is conceivable that such a conflict may become clear through subsequent experience with today's standard and test regime. NHTSA may opine on such conflicts in the future, if warranted. See id. at 883–86.

National Environmental Policy Act

NHTSA has analyzed this NPRM for the purposes of the National Environmental Policy Act. The agency has determined that implementation of this action would not have any significant impact on the quality of the human environment.

Paperwork Reduction Act

Under the procedures established by the Paperwork Reduction Act of 1995, a person is not required to respond to a collection of information by a Federal agency unless the collection displays a valid OMB control number. This NPRM would not establish any new information collection requirements.

National Technology Transfer and Advancement Act

Under the National Technology Transfer and Advancement Act of 1995 (NTTAA) (Public Law 104–113), ''all Federal agencies and departments shall use technical standards that are developed or adopted by voluntary consensus standards bodies, using such technical standards as a means to carry out policy objectives or activities determined by the agencies and departments.'' After carefully reviewing the available information, NHTSA has determined that there are no voluntary consensus standards relevant to this rulemaking.

Executive Order 12988

With respect to the review of the promulgation of a new regulation, section 3(b) of Executive Order 12988, ''Civil Justice Reform'' (61 FR 4729, February 7, 1996) requires that Executive agencies make every reasonable effort to ensure that the regulation: (1) Clearly specifies the preemptive effect; (2) clearly specifies the effect on existing Federal law or regulation; (3) provides a clear legal standard for affected conduct, while promoting simplification and burden reduction; (4) clearly specifies the retroactive effect, if any; (5) adequately defines key terms; and (7) addresses other important issues affecting clarity and general draftsmanship under any guidelines issued by the Attorney General. This document is consistent with that requirement. Pursuant to this Order, NHTSA notes as follows. The preemptive effect of this proposed rule is discussed above. NHTSA notes further that there is no requirement that individuals submit a petition for reconsideration or pursue other administrative proceeding before they may file suit in court.

Unfunded Mandates Reform Act

The Unfunded Mandates Reform Act of 1995 requires agencies to prepare a written assessment of the costs, benefits and other effects of proposed or final rules that include a Federal mandate likely to result in the expenditure by State, local or tribal governments, in the aggregate, or by the private sector, of more than $100 million annually (adjusted for inflation with base year of 1995). This NPRM would not result in expenditures by State, local or tribal governments, in the aggregate, or by the private sector in excess of $100 million annually.

Executive Order 13045

Executive Order 13045 (62 FR 19885, April 23, 1997) applies to any rule that: (1) is determined to be ''economically significant'' as defined under E.O. 12866, and (2) concerns an environmental, health, or safety risk that NHTSA has reason to believe may have a disproportionate effect on children.

This rulemaking is not subject to the Executive Order because it is not economically significant as defined in E.O. 12866.

Executive Order 13211

Executive Order 13211 (66 FR 28355, May 18, 2001) applies to any rulemaking that: (1) Is determined to be economically significant as defined under E.O. 12866, and is likely to have a significantly adverse effect on the supply of, distribution of, or use of energy; or (2) that is designated by the Administrator of the Office of Information and Regulatory Affairs as a significant energy action. This rulemaking is not subject to E.O. 13211.

Plain Language

Executive Order 12866 and the President's memorandum of June 1, 1998, require each agency to write all rules in plain language. Application of the principles of plain language includes consideration of the following questions:

- Have we organized the material to suit the public's needs?
- Are the requirements in the rule clearly stated?
- Does the rule contain technical language or jargon that isn't clear?
- Would a different format (grouping and order of sections, use of headings, paragraphing) make the rule easier to understand?
- Would more (but shorter) sections be better?
- Could we improve clarity by adding tables, lists, or diagrams?
- What else could we do to make the rule easier to understand?

If you have any responses to these questions, please include them in your comments on this proposal.

Regulation Identifier Number (RIN)

The Department of Transportation assigns a regulation identifier number (RIN) to each regulatory action listed in the Unified Agenda of Federal Regulations. The Regulatory Information Service Center publishes the Unified Agenda in April and October of each year. You may use the RIN contained in the heading at the beginning of this document to find this action in the Unified Agenda.

Privacy Act

Anyone is able to search the electronic form of all comments received into any of our dockets by the name of the individual submitting the comment (or signing the comment, if submitted on behalf of an association, business, labor union, etc.). You may review DOT's complete Privacy Act Statement in the **Federal Register** published on April 11, 2000 (Volume 65, Number 70; Pages 19477–78).

X. Public Participation

How do I prepare and submit comments?

Your comments must be written and in English. To ensure that your comments are correctly filed in the Docket, please include the docket number of this document in your comments.

Your comments must not be more than 15 pages long. (49 CFR 553.21). We established this limit to encourage you to write your primary comments in a concise fashion. However, you may attach necessary additional documents to your comments. There is no limit on the length of the attachments.

Please submit two copies of your comments, including the attachments, to Docket Management at the address given above under **ADDRESSES.**

Comments may also be submitted to the docket electronically by logging onto the Docket Management System website at *http://www.regulations.gov.* Follow the online instructions for submitting comments.

Please note that pursuant to the Data Quality Act, in order for substantive data to be relied upon and used by the agency, it must meet the information quality standards set forth in the OMB and DOT Data Quality Act guidelines. Accordingly, we encourage you to consult the guidelines in preparing your comments. OMB's guidelines may be accessed at *http://www.whitehouse.gov/omb/fedreg/reproducible.html.* DOT's guidelines may be accessed at MACROBUTTON HtmlResAnchor *http://dmses.dot.gov/submit/DataQualityGuidelines.pdf.*

How can I be sure that my comments were received?

If you wish Docket Management to notify you upon its receipt of your comments, enclose a self-addressed, stamped postcard in the envelope containing your comments. Upon receiving your comments, Docket Management will return the postcard by mail.

How do I submit confidential business information?

If you wish to submit any information under a claim of confidentiality, you should submit three copies of your complete submission, including the information you claim to be confidential business information, to the Chief Counsel, NHTSA, at the address given above under **FOR FURTHER INFORMATION CONTACT**. In addition, you should submit two copies, from which you have deleted the claimed confidential business information, to Docket Management at the address given above under **ADDRESSES.** When you send a comment containing information claimed to be confidential business information, you should include a cover letter setting forth the information specified in our confidential business information regulation. (49 CFR part 512.)

Will the agency consider late comments?

We will consider all comments that Docket Management receives before the close of business on the comment closing date indicated above under DATES. To the extent possible, we will also consider comments that Docket Management receives after that date. If Docket Management receives a comment too late for us to consider in developing a final rule (assuming that one is issued), we will consider that comment as an informal suggestion for future rulemaking action.

How can I read the comments submitted by other people?

You may read the comments received by Docket Management at the address given above under **ADDRESSES.** The hours of the Docket are indicated above in the same location. You may also see the comments on the Internet. To read the comments on the Internet, go to *http://www.regulations.gov.* Follow the online instructions for accessing the dockets.

Please note that even after the comment closing date, we will continue to file relevant information in the Docket as it becomes available. Further, some people may submit late comments. Accordingly, we recommend that you periodically check the Docket for new material.

Appendix A to the Preamble—Proposed Amendments to Federal Motor Vehicle Safety Standards

For the convenience of the reader and for illustration purposes, this appendix generally lists the proposed amendments according to the affected standard. This NPRM proposes to:

a. Amend 207, *Seating Systems,* to apply it to school buses with a GVWR of 4,536 kg (10,000 lb) or less (''small school buses'').

b. Amend FMVSS No. 208, *Occupant Crash Protection,* to:

1. Require lap/shoulder belt at all passenger-seating positions on small school buses.

2. Correct a typographical error in the heading of S4.4.5.

3. Specify lockability requirements for seat belts on school buses.

c. Amend FMVSS No. 210, *Seat Belt Assembly Anchorages,* to:

1. Specify a seat belt anchorage strength test of 3,000 pounds each for the torso and the lap portion of voluntarily-installed lap/shoulder belt anchorages for passengers in large school buses.

2. Specify a seat belt anchorage strength test of 5,000 pounds for voluntarily-installed lap belt anchorages in large school buses.

3. Add a requirement concerning lap/shoulder anchorage locations and adjustability so seat belts on school buses properly fit passengers from sizes ranging from an average 6-year-old through a 50th percentile adult male.

4. Add a requirement that the seat belts be anchored to the school bus seat structure.

d. Amend FMVSS No. 222, *School Bus Passenger Seating and Crash Protection,* to:

1. Increase seat back height from 20 inches to 24 inches above the seating reference point, and amend frontal restraining barrier requirements to make them consistent with the higher seat back heights.

2. Require lap/shoulder belt restraints instead of the current lap belts for small school buses.

3. Require voluntarily-installed lap belts and lap/shoulder belt systems in large school buses to meet performance requirements.

4. Add a quasi-static test for all passenger seats with lap/shoulder belts, to ensure compatibility between compartmentalization and lap/shoulder belt systems.

5. Specify a minimum seat belt width of 15 inches for all passenger school bus seats with lap/shoulder belts.

6. Require all seat bottom cushions that are designed to flip-up to have a self-latching mechanism.

It is noted that this list does not include FMVSS No. 209, because that standard already applies to seat belt assemblies for use in buses, a vehicle class that includes—by definition—school buses. (See ''school bus'' definition in 49 CFR 571.3.)

List of Subjects in 49 CFR Part 571

Imports, Motor vehicle safety, Motor vehicles, and Tires.

In consideration of the foregoing, NHTSA proposes to amend 49 CFR Part 571 as set forth below.

PART 571—FEDERAL MOTOR VEHICLE SAFETY STANDARDS

1.The authority citation for Part 571 continues to read as follows:

Authority: 49 U.S.C. 322, 30111, 30115, 30117 and 30166; delegation of authority at 49 CFR 1.50.

2. Section 571.207 is amended by revising the introductory text of S4.2, to read as follows:

§ 571.207 Standard No. 207; Seating systems.

* * * * *

S4.2. *General performance requirements.* When tested in accordance with S5, each occupant seat shall withstand the following forces, in newtons, except for a side-facing seat, a passenger seat on a bus other than a school bus, a passenger seat on a school bus with a GVWR greater than 4,536 kilograms (10,000 pounds), and a passenger seat on a school bus with a GVWR less than or equal to 4,536 kg manufactured before [*insert compliance date of the final rule*].

* * * * *

3. Section 571.208 is amended by revising S4.4.3.3, adding S7.1.5, and revising the heading of S4.4.5 and S4.4.5.1, to read as follows:

§ 571.208 Standard No. 208; Occupant crash protection.

* * * * *

S4.4.3.3 *School buses with a gross vehicle weight rating of 4,536 kg (10,000 pounds) or less.*

(a) Each school bus with a gross vehicle weight rating of 4,536 kg (10,000 pounds) or less manufactured before [*compliance date to be inserted*] must be equipped with an integral Type 2 seat belt assembly at the driver's designated seating position and at the right front passenger's designated seating position (if any), and with a Type 1 or Type 2 seat belt assembly at all other designated seating positions. Type 2 seat belt assemblies installed in compliance with this requirement must comply with Standard No. 209 (49 CFR 571.209) and with S7.1 and S7.2 of this standard. The lap belt portion of a Type 2 seat belt assembly installed at the driver's designated seating position and at the right front passenger's designated seating position (if any) must meet the requirements specified in S4.4.3.3(c).

(b) Each school bus with a gross vehicle weight rating of 4,536 kg (10,000 pounds) or less manufactured on or after [*compliance date to be inserted*] must be equipped with an integral Type 2 seat belt assembly at all designated seating positions. The seat belt assembly at the driver's designated seating position and at the right front passenger's designated seating position (if any) shall comply with Standard No. 209 (49 CFR 571.209) and with S7.1 and S7.2 of this standard. The lap belt portion of a Type 2 seat belt assembly installed at the driver's designated seating position and at the right front passenger's designated seating position (if any) shall meet the requirements specified in S4.4.3.3(c). Type 2 seat belt assemblies installed on the rear seats of school buses must meet the requirements of S7.1.1.5, S7.1.5 and S7.2 of this standard.

(c) The lap belt portion of a Type 2 seat belt assembly installed at the driver's designated seating position and at the right front passenger's designated seating position (if any) shall include either an emergency locking retractor or an automatic locking retractor, which retractor shall not retract webbing to the next locking position until at least ¾ inch of webbing has moved into the retractor. In determining whether an automatic locking retractor complies with this requirement, the webbing is extended to 75 percent of its length and the retractor is locked after the initial adjustment. If a Type 2 seat belt assembly installed in compliance with this requirement incorporates any webbing tension-relieving device, the vehicle owner's manual shall include the information specified in S7.4.2(b) of this standard for the tension-relieving device, and the vehicle shall comply with S7.4.2(c) of this standard.

* * * * *

S4.4.5 *Buses with a GVWR of 10,000 lb (4,536 kg) or less, except school buses, manufactured on or after September 1, 2007.*

S4.4.5.1 Except as provided in S4.4.5.2, S4.4.5.3, S4.4.5.4, S4.4.5.5 and S4.4.5.6, each bus as with a gross vehicle weight rating of 10,000 lb (4,536 kg) or less, except school buses, shall be equipped with a Type 2 seat belt assembly at every designated seating position other than a side-facing position. Type 2 seat belt assemblies installed in compliance with this requirement shall conform to Standard No. 209 (49 CFR 571.209) and with S7.1 and S7.2 of this standard. If a Type 2 seat belt assembly installed in compliance with this requirement incorporates a webbing tension relieving device, the vehicle owner's manual shall include the information specified in S7.3.1(b) of this standard for the tension relieving device, and the vehicle shall conform to S7.4.2(c) of this standard. Side-facing designated seating positions shall be equipped, at the manufacturer's option, with a Type 1 or Type 2 seat belt assembly.

* * * * *

S7.1.5 The seat belt assembly will operate by means of any emergency-locking or automatic-locking retractor that conforms to 49 CFR 571.209 to restrain persons whose dimensions range from those of an average 6-year-old child to those of a 50th percentile adult male. The seat back may be in any position.

* * * * *

4. Section 571.210 is amended by revising S2, amending S3 by adding definitions for ''school bus torso belt adjusted height'' and ''school bus torso belt anchor point,'' in alphabetical order, adding S4.1.3, and S4.1.3.1

through S4.1.3.5, and adding Figure 4 to the end of the section to read as follows:

§ 571.210 Standard No. 210; Seat belt assembly anchorages.

* * * * *

S2. *Application*. This standard applies to passenger cars, multipurpose passenger vehicles, trucks, buses, and school buses.

S3. Definitions.

* * * * *

School bus torso belt adjusted height means the point at which the torso belt deviates more than 10 degrees from the horizontal plane when the torso belt is pulled away from the seat by a 20 N force at a location on the webbing approximately 100 mm from the adjustment device and the pulled portion of the webbing is held in a horizontal plane.

School bus torso belt anchor point means the midpoint of the torso belt width where the torso belt first contacts the torso belt anchorage.

* * * * *

S4.1.3 *School bus passenger seats*.

S4.1.3.1 Seat belt anchorages on school buses manufactured on or after [*insert compliance date of the final rule*] must be attached to the school bus seat structure and the seat belt shall be Type 1 or Type 2 as defined in S3 of FMVSS No. 209 (49 CFR 571.209).

S4.1.3.2 Type 2 seat belt anchorages on school buses manufactured on or after [*insert compliance date of the final rule*] must meet the location requirements specified in Figure 4. The vertical height of the school bus torso belt anchor point must be at least 520 mm above the seating reference point. The school bus torso belt adjusted height must be adjustable from the torso belt anchor point to within at least 280 mm of the seating reference point.

S4.1.3.3 School buses with a GVWR less than or equal to 4,536 kg (10,000 pounds) must meet the requirements of S4.1.1 of this standard.

S4.1.3.4 School buses with a GVWR greater than 4,536 kg (10,000 pounds) manufactured on or after [*insert compliance date of the final rule*], with Type 1 seat belt anchorages, must meet the strength requirements specified in S4.2.1 of this standard.

S4.1.3.5 School buses with a GVWR greater than 4,536 kg (10,000 pounds) manufactured on or after [*insert compliance date of the final rule*], with Type 2 seat belt anchorages, must meet the strength requirements specified in S4.2.2 of this standard.

* * * * *

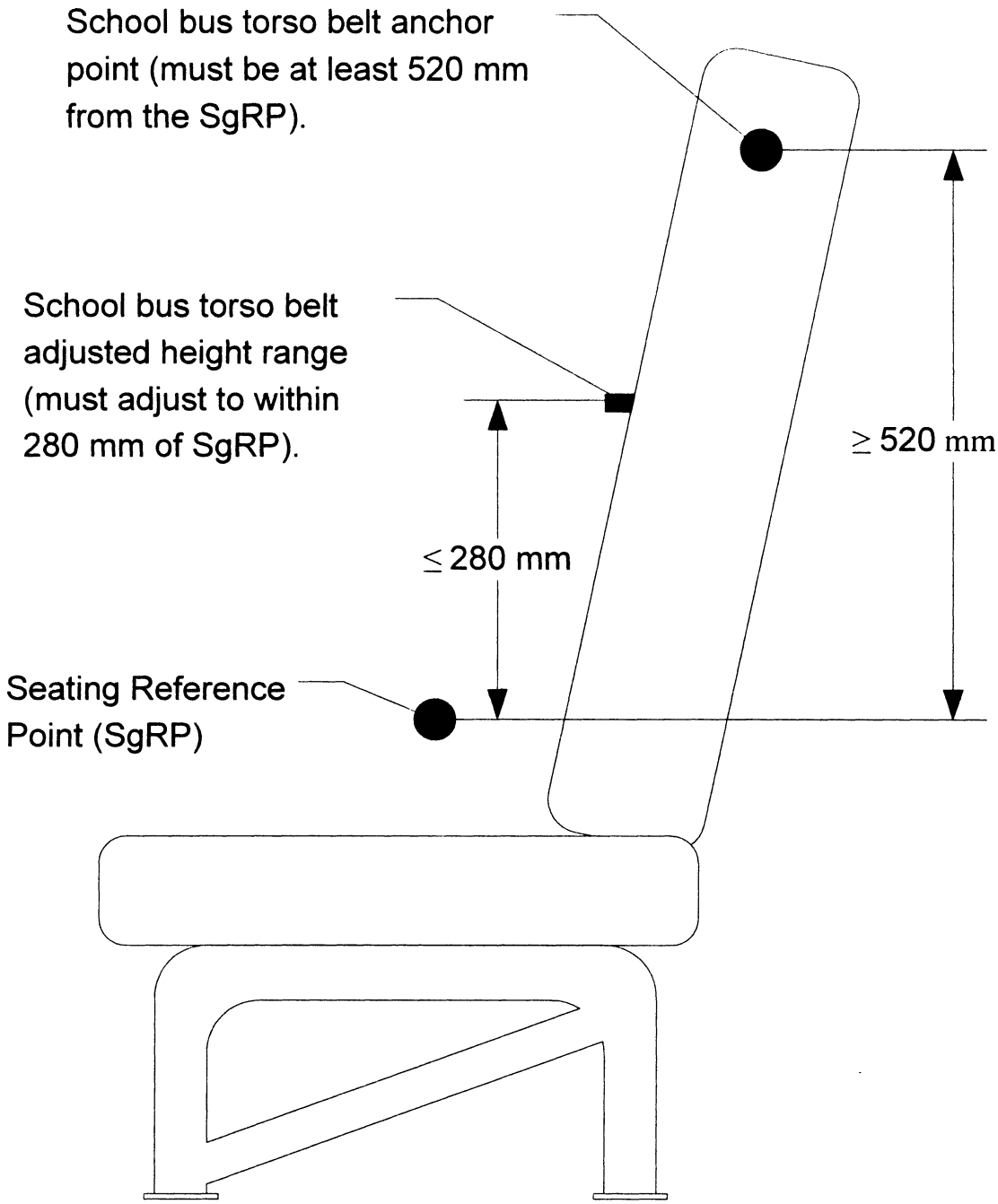

Figure 4 - Seat belt anchorage diagram

BILLING CODE 4910–59–C

5. Section 571.222 is amended by:

a. Adding to S4, in alphabetical order, a definition of ''seat bench width''

b. Revising S4.1, paragraphs S5(a) and (b), and paragraph S5.1.2;

c. Redesignating S5.1.5 as S5.1.5(a) and adding paragraph S5.1.5(b);

d. Adding S5.1.6 and S5.1.7; and revising S5.2.2; and,

e. Adding Figure 8 following Figure 7 at the end of the section.

The revisions and additions read as follows:

§ 571.222 Standard No. 222; School bus passenger seating and crash protection.

* * * * *

S4. *Definitions.*

* * * * *

Seat bench width means the maximum transverse width of the bench seat cushion.

* * * * *

S4.1 *Determination of the number of seating positions and seat belt positions*

(a) The number of seating positions considered to be in a bench seat for vehicles manufactured before [*insert compliance date here*] is expressed by the symbol W, and calculated as the seat bench width in millimeters divided by 381 and rounded to the nearest whole number.

(b) The number of seating positions and the number of Type 1 seat belt

positions considered to be in a bench seat for vehicles manufactured on or after [*insert compliance date here*] is expressed by the symbol W, and calculated as the seat bench width in millimeters divided by 380 and rounded to the nearest whole number.

(c) The number of seat belt positions in a bench seat equipped with Type 2 seat belts for vehicles manufactured on or after [*insert compliance date here*] is expressed by the symbol Y, and calculated as the seat bench width in millimeters divided by 380 and rounded to the next lowest whole number. The minimum seat bench width for a seat equipped with a Type 2 belt is 380 mm.

* * * * *

S5. *Requirements.*

(a) *Large school buses.*

(1) Each school bus manufactured before [insert compliance date] with a gross vehicle weight rating of more than 4,536 kg (10,000 pounds) shall be capable of meeting any of the requirements set forth under this heading when tested under the conditions of S6. However, a particular school bus passenger seat (i.e., a test specimen) in that weight class need not meet further requirements after having met S5.1.2 and S5.1.5, or having been subjected to either S5.1.3, S5.1.4, or S5.3.

(2) Each school bus manufactured on or after [insert compliance date] with a gross vehicle weight rating of more than 4,536 kg (10,000 pounds) shall be capable of meeting any of the requirements set forth under this heading when tested under the conditions of S6 of this standard or § 571.210. However, a particular school bus passenger seat (i.e., a test specimen) in that weight class need not meet further requirements after having met S5.1.2 and S5.1.5, or having been subjected to either S5.1.3, S5.1.4, S5.1.6 (if applicable), or S5.3. Each vehicle with voluntarily installed Type 1 seat belts and seat belt anchorages at W seating positions in a bench seat or Type 2 seat belts and seat belt anchorages at Y seat belt positions in a bench seat shall also meet the requirements of:

(i) 4.4.3.3 of Standard No. 208 (49 CFR 571.208);

(ii) Standard No. 209 (49 CFR 571.209), as they apply to school buses; and

(iii) Standard No. 210 (49 CFR § 571.210) as it applies to school buses with a gross vehicle weight rating greater than 10,000 pounds.

(b) *Small school buses.* Each vehicle with a gross vehicle weight rating of 4,536 kg (10,000 pounds) or less shall be capable of meeting the following requirements at all rear seating positions:

(1)(i) In the case of vehicles manufactured before September 1, 1991, the requirements of §§ 571.208, 571.209, and 571.210 as they apply to multipurpose passenger vehicles;

(ii) In the case of vehicles manufactured on or after September 1, 1991, the requirements of S4.4.3.3 of § 571.208 and the requirements of §§ 571.209 and 571.210 as they apply to school buses with a gross vehicle weight rating of 4,536 kg or less;

(iii) In the case of vehicles manufactured on or after [*insert compliance date of the final rule*] the requirements of S4.4.3.3(b) of § 571.208 and the requirements of §§ 571.209 and 571.210 as they apply to school buses with a gross vehicle weight rating of 4,536 kg or less; and

(2) The requirements of S5.1.2, S5.1.3, S5.1.4, S5.1.5, S5.1.6, S5.3, and S5.4 of this standard. However, the requirements of §§ 571.208 and 571.210 shall be met at Y seat belt positions in a bench seat, and a particular school bus passenger seat (i.e. a test specimen) in that weight class need not meet further requirements after having met S5.1.2 and S5.1.5, or after having been subjected to either S5.1.3, S5.1.4, S5.1.6, or S5.3 of this standard or § 571.210 or § 571.225.

* * * * *

S5.1.2 *Seat back height, position, and surface area.*

(a) For school buses manufactured before [*compliance date to be inserted*], each school bus passenger seat must be equipped with a seat back that has a vertical height of at least 508 mm (20 inches) above the seating reference point. Each school bus passenger seat must be equipped with a seat back that, in the front projected view, has front surface area above the horizontal plane that passes through the seating reference point, and below the horizontal plane 508 mm (20 inches) above the seating reference point, of not less than 90 percent of the seat bench width in millimeters multiplied by 508.

(b) For school buses manufactured on or after [*compliance date to be inserted*], each school bus passenger seat must be equipped with a seat back that has a vertical height of at least 610 mm (24 inches) above the seating reference point. The minimum total width of the seat back at 610 mm (24 inches) above the seating reference point shall be 75 percent of the maximum width of the seat bench. Each school bus passenger seat must be equipped with a seat back that, in the front projected view, has front surface area above the horizontal plane that passes through the seating reference point, and below the horizontal plane 610 mm (24 inches) above the seating reference point, of not less than 90 percent of the seat bench width in millimeters multiplied by 610.

* * * * *

S5.1.5 *Seat cushion retention.*

* * * * *

(b) For school buses manufactured on or after [*compliance date to be inserted*], school bus passenger seat cushions equipped with attachment devices that allow for the seat cushion to be removable without tools or to flip up must have a self-latching mechanism that is activated when a 22 kg (48.4 pound) mass is placed on the center of the seat cushion with the seat cushion in the down position.

S5.1.6 Quasi-static test of compartmentalization and Type 2 seat belt performance.

S5.1.6.1 This section applies to rear passenger seats on school buses manufactured on or after [*compliance date to be inserted*] with a gross vehicle weight rating of more than 4,536 kg (10,000 pounds), and that are equipped with Type 2 seat belt assemblies. When tested under the conditions of S5.1.6.5.1 through S5.1.6.5.6, the school bus torso belt anchor point must not displace horizontally forward more than the value in millimeters calculated from the following expression:

$$(AH + 100)\ (\tan\Phi + 0.174/\cos\Phi)\ \text{mm}$$

where AH is the height in millimeters of the school bus torso belt anchor point defined by S4.1.3.2 of FMVSS No. 210 (49 CFR 571.210) and Φ is the angle of the posterior surface of the seat back defined in S5.1.6.3 of this standard.

S5.1.6.2 This section applies to rear passenger seats on school buses manufactured on or after [*compliance date to be inserted*] with a gross vehicle weight rating less than or equal to 4,536 kg (10,000 pounds), equipped with Type 2 seat belt assemblies. When tested under the conditions of S5.1.6.5.1 through 5.1.6.5.6, the school bus torso belt anchor point must not displace horizontally forward more than the value in millimeters calculated from the following expression:

$$(AH + 100)\ (\tan\Phi + 0.259/\cos\Phi)\ \text{mm}$$

where AH is the height in millimeters of the school bus torso belt anchor point defined by S4.1.3.2 of FMVSS No. 210 (49 CFR 571.210) and Φ is the angle of the posterior surface of the seat back defined in S5.1.6.3 of this standard.

S5.1.6.3 *Angle of the posterior surface of a seat back.* Position the loading bar specified in S6.5 of this standard so that it is laterally centered

behind the seat back with the bar's longitudinal axis in a transverse plane of the vehicle in a horizontal plane within ± 6 mm (0.25 inches) of the horizontal plane passing through the seating reference point and move the bar forward against the seat back until a force of 44 N (10 pounds) has been applied. Position a second loading bar as described in S6.5 of this standard so that it is laterally centered behind the seat back with the bar's longitudinal axis in a transverse plane of the vehicle and in the horizontal plane 406 ± 6 mm (16 ± 0.25 inches) above the seating reference point, and move the bar forward against the seat back until a force of 44 N (10 pounds) has been applied. Determine the angle from vertical of a line in the longitudinal vehicle plane that passes through the geometric center of the cross-section of each cylinder, as shown in Figure 8. That angle is the angle of the posterior surface of the seat back.

S5.1.6.4 The seat back must absorb 452W joules of energy when subjected to the force specified in S5.1.6.5.7.

S5.1.6.5 *Quasi-static test procedure.*

S5.1.6.5.1 If the seat back inclination is adjustable, the seat back is placed in the manufacturer's normal design riding position. If such a position is not specified, the seat back is positioned so it is in the most upright position.

S5.1.6.5.2 Position the lower loading bar specified in S6.5 of this standard so that it is laterally centered behind the seat back with the bar's longitudinal axis in a transverse plane of the vehicle and in any horizontal plane between 102 mm (4 inches) above and 102 mm (4 inches) below the seating reference point of the school bus passenger seat behind the test specimen. Position the upper loading bar described in S6.5 so that it is laterally centered behind the seat back with the bar's longitudinal axis in a transverse plane of the vehicle and in the horizontal plane 406 mm (16 inches) above the seating reference point of the school bus passenger seat behind the test specimen.

S5.1.6.5.3 Apply a force of 3,114W N (700W pounds) horizontally in the forward direction through the lower loading bar specified at S6.5 at the pivot attachment point. Reach the specified load in not less than 5 and not more than 30 seconds. No sooner than 1.0 second after attaining the required force, reduce that force to 1,557W N (350W pounds) and maintain the pivot point position of the loading bar at the position where the 1,557W N (350W pounds) is attained until the completion of S5.1.6.5.5 and S5.1.6.5.6 of this standard.

S5.1.6.5.4 Position the body block specified in Figure 3 of FMVSS No. 210 (49 CFR 571.210) under each torso belt (between the torso belt and the seat back) in the passenger seat and apply a preload force of 300 N (67 pounds) on each body block in a forward direction parallel to the longitudinal centerline of the vehicle pursuant to the specifications of FMVSS No. 210 (49 CFR 571.210). After preload application is complete, the origin of the 203 mm body block radius at any point across the 102 mm body block thickness shall lie within the zone defined by S5.1.6.5.3(a) through S5.1.6.5.3(c):

(a) At or rearward of a transverse vertical plane of the vehicle located 100 mm forward of the seating reference point.

(b) At or above a horizontal plane located 195 mm above the seating reference point.

(c) At or below a horizontal plane located 345 mm above the seating reference point.

(d) Determination of the seating reference point is provided by the manufacturer; alternatively, if the seating reference point is not provided by the manufacturer, NHTSA will make its own determination as to the seating reference point.

S5.1.6.5.5 (a) For school buses with a gross vehicle weight rating of 4,536 kg (10,000 pounds) or less, simultaneously apply the following force to each body block:

(1) If ((seat bench width in mm) − (380Y)) is 25 mm (1 inch) or less, apply 5,000 N (1,124 pounds); or

(2) If ((seat bench width in mm) − (380Y)) is greater than 25 mm (1 inch), apply 7,500 N (1,686 pounds).

(b) For school buses with a gross vehicle weight rating of greater than 4,536 kg (10,000 pounds) simultaneously apply the following force to each body block:

(1) If ((seat bench width in mm) − (380Y)) is 25 mm (1 inch) or less, apply 3,300 N (742 pounds); or

(2) If ((seat bench width in mm) − (380Y)) is greater than 25 mm (1 inch), apply 5,000 N (1,124 pounds).

S5.1.6.5.6 Reach the specified load in not less than 5 and not more than 30 seconds. Measure the torso belt anchor point horizontal displacement and then remove the body block.

S5.1.6.5.7 Apply an additional force horizontally in the forward direction through the upper bar until 452W joules of energy have been absorbed in deflecting the seat back. The maximum travel of the pivot attachment point for the upper loading bar shall not exceed 356 mm as measured from the position at which the initial application of 44 N of force is attained. Apply the additional load in not less than 5 seconds and not more than 30 seconds. Maintain the pivot attachment point at the maximum forward travel position for not less than 5 seconds, and not more than 10 seconds and release the load in not less than 5 seconds and not more than 30 seconds. (For the determination of S5.1.6.5.7, the energy calculation describes only the force applied through the upper loading bar, and the forward and rearward travel distance of the upper loading bar pivot attachment point measured from the position at which the initial application of 44 N of force is attained.) If energy absorption of 452W joules cannot be obtained by the seat back, the test procedure is terminated and the seat back is determined to have failed to meet S5.1.6.4.

S5.1.7 *Minimum seat width.* For school buses manufactured on or after [*compliance date to be inserted*], each passenger seating position with a Type 2 restraint system shall have a minimum seating width and seat belt anchor width of 380 mm (15 inches).

* * * * *

S5.2.2 *Barrier height, position, and rear surface area.* The position and rear surface area of the restraining barrier shall be such that, in a front projected view of the bus, each point of the barrier's perimeter coincides with or lies outside of the perimeter of the minimum seat back area required by S5.1.2 for the seat immediately rearward of the restraining barrier.

* * * * *

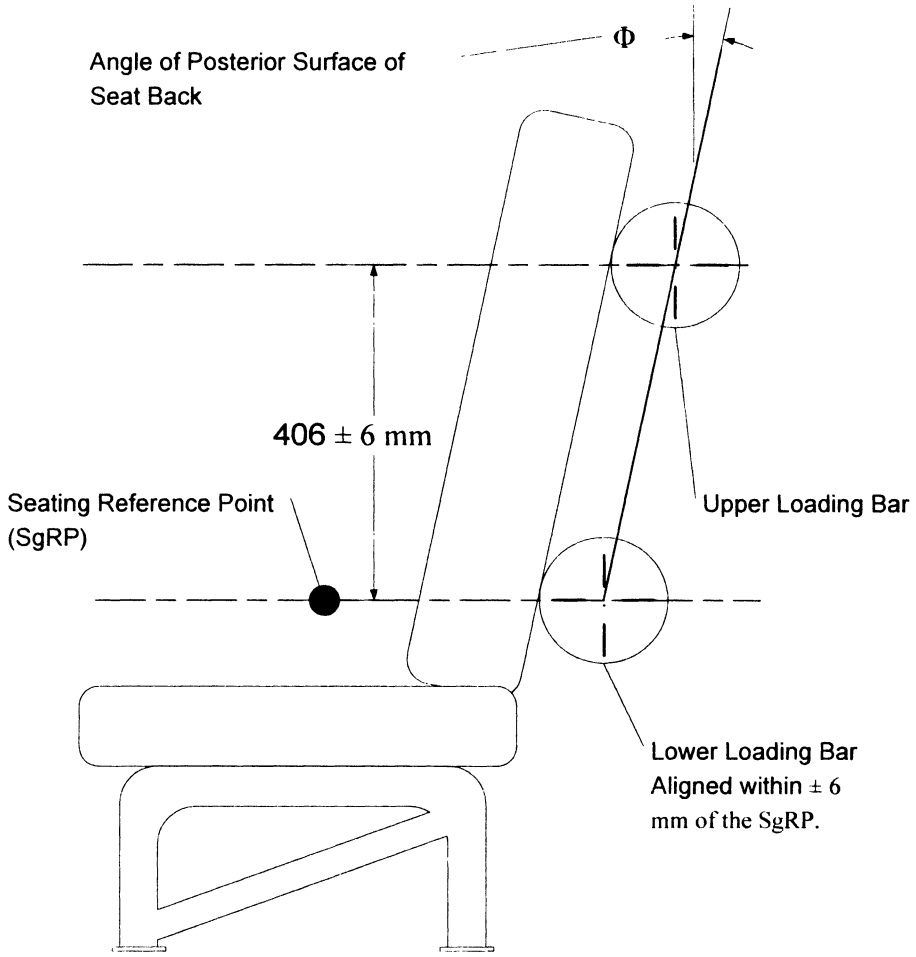

Figure 8 – Definition of initial angle of compartmentalizing seat back surface

Issued on: November 15, 2007.

Ronald L. Medford,

Senior Associate Administrator for Vehicle Safety.

[FR Doc. 07–5758 Filed 11–19–07; 10:00 am]

BILLING CODE 4910–59–P

DEPARTMENT OF TRANSPORTATION

National Highway Traffic Safety Administration

49 CFR Part 594

[Docket No. NHTSA 2007–0037; Notice 1]

RIN 2127–AK10

Schedule of Fees Authorized by 49 U.S.C. 30141 Offer of Cash Deposits or Obligations of the United States in Lieu of Sureties on DOT Conformance Bonds

AGENCY: National Highway Traffic Safety Administration (NHTSA), DOT.

ACTION: Notice of proposed rulemaking (NPRM).

SUMMARY: This document proposes to amend NHTSA's regulations that prescribe fees authorized by 49 U.S.C. Sec. 30141 for various functions performed by the agency with respect to the importation of motor vehicles that do not conform to all applicable Federal motor vehicle safety and bumper standards. An importer must file with U.S. Customs and Border Protection (CBP) a Department of Transportation (DOT) conformance bond at the time that a nonconforming motor vehicle is offered for importation into the United States, or in lieu of such a bond, the importer may post cash deposits or obligations of the United States to ensure that the vehicle will be brought into conformance with all applicable standards within 120 days from the date of importation, or will be exported from, or abandoned to, the United States. To avoid the costs of a DOT conformance bond, some importers have sought to post cash deposits, which would relieve the importers of the bonding costs but cause the agency to expend considerable resources. To permit the government to recover these expenses, this amendment would establish a fee for the agency's processing of these cash deposits or obligations of the United States that are furnished in lieu of a DOT conformance bond.

DATES: You should submit your comments early enough to ensure that Docket Management receives them not later than January 7, 2008.

ADDRESSES: Comments should refer to the docket and notice numbers above and be submitted by any of the following methods:

- *Federal eRulemaking Portal:* Go to *http://www.regulations.gov*. Follow the online instructions for submitting comments.
- *Mail: Docket Management Facility:* U.S. Department of Transportation, 1200 New Jersey Avenue, SE., West Building

Ground Floor, Room W12–140, Washington, DC 20590–0001.

• *Hand Delivery or Courier:* West Building Ground Floor, Room W12–140, 1200 New Jersey Avenue, SE., between 9 a.m. and 5 p.m. ET, Monday through Friday, except Federal holidays.

• *Fax:* 202–493–2251.

Instructions: For detailed instructions on submitting comments and additional information on the rulemaking process, see the Public Participation heading of the Supplementary Information section of this document. Note that all comments received will be posted without change to *http://www.regulations.gov*, including any personal information provided. Please see the Privacy Act heading below.

Privacy Act: Anyone is able to search the electronic form of all comments received into any of our dockets by the name of the individual submitting the comment (or signing the comment, if submitted on behalf of an association, business, labor union, etc.). You may review DOT's complete Privacy Act Statement in the **Federal Register** published on April 11, 2000 (65 FR 19477–78) or you may visit *http://DocketInfo.dot.gov*.

Docket: For access to the docket to read background documents or comments received, go to *http://www.regulations.gov*. or the street address listed above. Follow the online instructions for accessing the dockets.

FOR FURTHER INFORMATION CONTACT: For non-legal issues: Coleman Sachs, Office of Vehicle Safety Compliance, National Highway Traffic Safety Administration, 1200 New Jersey Avenue, SE., Washington, DC 20590 (202–366–3151). For legal issues: Michael Goode, Office of Chief Counsel, National Highway Traffic Safety Administration, 1200 New Jersey Avenue, SE., Washington, DC 20590 (202–366–5238).

SUPPLEMENTARY INFORMATION:

A. Background

Subject to certain exceptions, 49 U.S.C. 30112(a) prohibits any person from importing into the United States a motor vehicle manufactured on or after the date that an applicable Federal motor vehicle safety standard (FMVSS) takes effect unless the vehicle complies with the standard and is so certified by its manufacturer. One of the exceptions to this prohibition is found in 49 U.S.C. 30141. That section permits an importer that is registered with NHTSA (a ''registered importer'') to import a motor vehicle that was not originally manufactured to conform to all applicable FMVSS, provided NHTSA has decided that the vehicle is eligible for importation. Under the criteria that are specified in Section 30141 for these decisions, a motor vehicle is not eligible for importation unless, among other things, it is capable of being altered to comply with all applicable FMVSS. See 49 U.S.C. 30141(a)(1)(A)(iv) and (B).

B. Requirements for Bonding

Once a motor vehicle has been declared eligible for importation, it can be imported by a registered importer (RI) or by an individual who has executed a contract or other agreement with an RI to bring the vehicle into compliance with applicable FMVSS. For vehicles that are imported in this fashion, a DOT conformance bond (Form HS–474), in an amount equivalent to 150 percent of the declared value of the vehicle, must be furnished to CBP at the time of importation to ensure that the necessary modifications are completed within 120 days of entry or, if conformance is not achieved, for the vehicle to be delivered to the Secretary of Homeland Security for export at no cost to the United States, or for the vehicle to be abandoned to the United States. See 49 CFR 591.6(c). The DOT conformance bond must be underwritten by a surety that possesses a certificate of authority to underwrite Federal bonds. See 49 CFR 591.8(c), referencing a list of certificated sureties at 54 FR 27800, June 30, 1989.

In lieu of sureties on a DOT conformance bond, an importer may offer United States money, United States bonds (except for savings bonds), United States certificates of indebtedness, Treasury notes, or Treasury bills (hereinafter referred to as ''cash deposits'') in an amount equal to the amount of the bond. See 49 CFR 591.10(a).

In recent years, a number of RIs have encountered difficulty in obtaining DOT conformance bonds underwritten by certificated sureties. To achieve the entry of the nonconforming vehicles they have sought to import, these RIs have had to resort to furnishing NHTSA with cash deposits in lieu of sureties on a DOT conformance bond. The receipt, processing, handling, and disbursement of these cash deposits has caused the agency to consume a considerable amount of staff time and material resources.

C. Fees Authorized by 49 U.S.C. 30141

NHTSA is authorized under 49 U.S.C. 30141(a)(3) to establish an annual fee requiring RIs to pay for the costs of carrying out the RI program. The agency is also authorized under this section to establish fees to pay for the costs of processing the conformance bonds that RIs provide, and fees to pay for the costs of making agency decisions relating to the importation of noncomplying motor vehicles and equipment.

The agency has, to date, established five separate fees under the authority of 49 U.S.C. 30141. These are set forth in 49 CFR part 594. The first is the annual fee that is collected from RIs to cover the agency's costs for administering the RI program. This fee, which is covered by section 594.6, is currently set at $677 for persons applying for RI status and at $570 for those seeking the renewal of that status. As described in section 594.6, the fee is based on the direct and indirect costs incurred by the agency in processing and acting upon initial applications for RI status and annual statements seeking the renewal of that status, as well as other actions performed by the agency in administering the RI program.

The second fee is collected from each motor vehicle manufacturer or RI who petitions NHTSA to decide that a nonconforming vehicle is eligible for importation. This fee, which is covered by 49 CFR 594.7, is currently set at $175 for a petition seeking an eligibility decision on the basis that a nonconforming vehicle is substantially similar to a U.S. certified counterpart, and at $800 for a petition seeking such a decision on the basis that a nonconforming vehicle is capable of being altered to conform to all applicable standards. As detailed in section 594.7, this fee is based on the direct and indirect costs incurred by NHTSA in processing and acting upon import eligibility petitions. In the event that a petitioner requests an inspection of a vehicle, the sum of $827 is added to the fee for vehicles that are the subject of either type of petition.

The third fee is for importing a vehicle under an eligibility decision made by the Administrator. This fee, which is covered by 49 CFR 594.8, is currently set at $208 per vehicle. As described in section 594.8, this fee is calculated to cover NHTSA's direct and indirect costs in making import eligibility decisions.

The fourth fee covers the agency's costs for reviewing a certificate of conformity that an RI submits for each vehicle that it imports under conformance bond. This fee, which is covered by 49 CFR 594.10, encompasses review of the RI's certificate of conformity, which establishes that a nonconforming vehicle has been brought into conformity with all applicable standards and permits the agency to release the conformance bond that was furnished for the vehicle at the

time of entry. This fee is currently $18 per vehicle if the vehicle is entered using paper documents. If the vehicle has been electronically entered through the Automated Broker Interface (ABI) system and the RI has an e-mail address, the fee for reviewing the certificate of conformity is $6, provided the fee is paid by credit card. If however, there are errors made in the ABI entry information or omissions in the certificate of conformity, $48 is charged to correct or complete the information.

The fifth fee has been established pursuant to 49 U.S.C. 30141(a)(3)(A) to pay for the costs of processing bonds provided to the Secretary of the Treasury. RIs furnish these bonds for each vehicle covered by a certificate of conformity that is submitted to NHTSA. This fee, which is covered by 49 CFR 594.9, is currently set at $9.77 and only reimburses CBP for services that agency performs at the time of entry. The fee is based on direct and indirect cost information provided to NHTSA by CBP.

D. Proposed Fee for Processing Cash Deposits

Although the above-described fees have permitted NHTSA to recover the costs it incurs in administering certain aspects of the RI program, such as making import eligibility decisions, other services that NHTSA provides to importers of nonconforming vehicles have gone unreimbursed. One such service for which the agency believes it is entitled to reimbursement under 49 U.S.C. 30141 is the receipt, processing, handling, and disbursement of cash deposits submitted by importers and RIs in lieu of sureties on DOT conformance bonds.

When the RI program was first established following the enactment of the Imported Vehicle Safety Compliance Act of 1988, Pub. L. 100–52, bonding companies were reluctant to serve as sureties because of their unfamiliarity with DOT conformance bonds, and prospective importers found it difficult to obtain such bonds. To assist importers and to provide relief from an unintended impediment to the importation of nonconforming vehicles, the agency later proposed cash deposits as an alternate to providing a bond, and formalized the process by adding to its regulations a provision permitting such deposits, as found at 49 CFR 591.10. See 58 FR 12905 (March 8, 1993).

When other fees were established under part 594, NHTSA did not recognize a need to impose a fee to recover the costs it incurs in handling cash deposits because few cash deposits had been made and they accounted for a relatively small share of the work performed by the agency. In the ensuing years, NHTSA has devoted a substantially greater share of its staff time to those efforts. More recently, a Customs broker representing an RI who could obtain a DOT conformance bond from a surety asked the agency whether the importer could provide a cash deposit instead. The broker stated that the importer was reluctant to pay the necessary fee for obtaining a DOT conformance bond and was informed by the RI that he could avoid any fee by sending NHTSA a cash deposit. Had the importer submitted a cash deposit, the agency would have been required to expend considerable resources for his benefit, and for the sole reason that he was unwilling to pay for a DOT conformance bond. This circumstance alerted the agency to the need to charge a fee for processing cash deposits to offset the agency's costs for performing this work.

Because NHTSA's acceptance of the cash deposits is a necessary predicate to the release of the vehicle into the commerce of the United States, NHTSA has tentatively concluded that the expense incurred by the agency to receive, process, handle, and disburse cash deposits may be treated as part of the bond processing cost, for which NHTSA is authorized to set a fee under 49 U.S.C. 30141(a)(3)(A).

Even if such authority did not exist in Chapter 301 of Title 49, U.S. Code, the Independent Offices Appropriation Act of 1952, 31 U.S.C. Sec. 9701, provides ample authority for NHTSA to impose fees that are sufficient to recover the agency's full costs to receive, process, handle, and disburse cash deposits. By performing these tasks related to cash deposits, NHTSA is performing a specific service for an identifiable beneficiary that can form the basis for the imposition of a fee under 31 U.S.C. Sec. 9701. Courts have long recognized that Federal agencies may impose fees under section 9701 for providing comparable services to regulated entities. See, *e.g.*, *Seafarers International Union of North America* v. *U.S. Coast Guard*, 81 F.3d 179, 183 (DC Cir. 1996) (finding the Coast Guard authorized to charge reasonable fees for processing applications for merchant mariner licenses, certificates, and work documents); *Engine Manufacturers Association* v. *E.P.A.*, 20 F.3d 1177, 1180 (DC Cir. 1994) (finding the E.P.A. authorized to impose a fee to recover its costs for testing vehicles and engines for compliance with the emission standards of the Clean Air Act); and *National Cable Television Association, Inc.* v. *F.C.C.*, 554 F.2d 1094, 1101 (DC Cir. 1976) (finding the F.C.C. authorized to impose fees for issuing certificates of compliance to cable television operators).

In view of the language and judicial construction of 31 U.S.C. 9701, NHTSA is relying on this provision as an independent source of authority for the proposed fee. The agency believes that this provision and 49 U.S.C. 30141 each provide sufficient separate authority for the proposed fee and the other fees that the agency has established under 49 CFR part 594.

E. Fee Computation

As previously noted, NHTSA has computed all other fees that it collects under the authority of 49 U.S.C. 30141 on the basis of all direct and indirect costs incurred by the agency in performing the function for which the fee is charged. In the **Federal Register** notice proposing the original schedule of fees that was adopted in part 594, the agency observed that this approach was consistent with the manner in which other agencies have computed user fees under the Independent Offices Appropriation Act, 31 U.S.C. 9701, and the Consolidated Omnibus Budget Reconciliation Act, P.L. 99–272. See 54 FR 17792, 17793 (April 25, 1989). NHTSA specified in its 1989 NPRM proposing rules for the RI program that ''the fees imposed by part 594 would include the agency's best direct and indirect cost estimates of the man-hours involved in each activity, on both the staff and supervisory levels, the costs of computer and word processor usage, costs attributable to travel, salary, and benefits, and maintenance of work space,'' as appropriate for each fee. See 54 FR 17795 (April 25, 1989). Subsequently, the Office of Management and Budget (OMB), in Circular A–25 that established Federal policy for the assessment of user fees under 31 U.S.C. Sec. 9701, stated that such fees must be ''sufficient to recover the full cost to the Federal Government * * * of providing the service, resource, or good when the Government is acting in its capacity as a sovereign.'' See 58 FR 38142, 38144 (July 15, 1993).

Applying an approach consistent with the OMB Circular and the one followed in its 1989 rulemaking, the agency has considered its direct and indirect costs in calculating the proposed fee for the review, processing, handling, and disbursement of cash deposits submitted by importers and RIs in lieu of sureties on a DOT conformance bond as follows:

The direct costs that would be used to calculate the proposed fee include the estimated cost of contractor and

professional staff time for administering cash deposits submitted by importers and RIs in lieu of sureties on a DOT conformance bond. Additional direct costs include computer equipment and maintenance costs, telephone toll charges, and postage.

The indirect costs include a pro rata allocation of the average benefits of agency staff while administering cash deposits. Benefits provided by NHTSA amount to 21.5 percent of the salary earned by its professional staff. The indirect costs also include a *pro rata* allocation of the costs attributable to the rental and maintenance of office space and equipment, the use of office supplies, and other overhead items. For fiscal years (FY) 2007 and 2008, these costs are projected to average $17.07/hour for each employee and contract support staff member working at NHTSA headquarters.

The estimated cost of contract and professional staff time is calculated on the basis of the full cost for time spent during FY 2007 and the estimated FY 2008 rates, including benefits (for professional staff only) and overhead. This is summarized in Table 1 below:

TABLE 1.—STAFF COSTS

NHTSA staff	FY 2007	FY 2008 est.
Contractor	$33.43	$34.70
NHTSA Manager	59.93	62.20
NHTSA Senior Manager	67.04	69.58

Administering the process begins when the cash deposits are received by mail. We estimate that a contractor spends 10 minutes logging receipt of, and hand delivering the cash deposits to, a manager within NHTSA's Office of Vehicle Safety Compliance (OVSC). The OVSC manager spends an estimated 20 minutes discussing by telephone with the importer, the necessary formal agreement and its obligations, preparing the formal agreement between the agency and the importer, and faxing the agreement to the importer for signature. After the importer signs and returns the agreement, a contractor spends an estimated 5 minutes logging receipt of the agreement and returning it to the OVSC manager. We estimate that the OVSC manager spends 20 minutes to prepare a transmittal memo that describes the formal agreement and requests the approval and signature of a senior NHTSA manager, who by regulation is authorized to obligate the agency. Another 30 minutes of time is needed for agency chain-of-command review and approval of the agreement.

Once the agreement is executed, the OVSC manager expends 10 minutes preparing and faxing a letter that notifies CBP that NHTSA has approved the vehicle's formal entry into the United States. The OVSC manager prepares an additional letter notifying the importer that the agreement has been signed, that CBP has been notified, and that the vehicle can now be formally entered into the United States. We estimate that preparing and transmitting this letter takes 10 minutes. The OVSC manager also notifies a contractor to record a notation in the agency's Motor Vehicle Importation Information (MVII) database.

The OVSC manager consumes 10 minutes of work time preparing a cover memorandum and delivering the cash deposits to the agency's finance manager. The finance manager delivers the cash deposits to a Washington, DC bank for deposit in a non-interest bearing account. We estimate that it takes one hour to accomplish this task, which concludes the first stage of administering the cash deposit.

Based on the time required to accomplish these tasks, we calculate that for FY 2007, 20 minutes of contractor time costs $16.83 and two hours and 40 minutes of professional staff time costs $241.01. Therefore, the total FY 2007 cost for staff time is $260.84. Using projected hourly rate increases of 3.79% for both contract and professional staff, we estimate a staff time cost of $268.80 for FY 2008.

The second phase of the process begins when the importer notifies NHTSA that vehicle conformance obligations have been met. We estimate that this notification takes 10 minutes of professional staff time. The OVSC manager takes 10 minutes of time preparing a cover memorandum to the finance manager that requests that a check be drawn on the agency's account in the importer's name. We estimate that it takes one hour of the finance manager's time to order and retrieve from the bank a check drawn on the agency's non-interest bearing account. The finance manager consumes 10 minutes of time delivering the check to the OVSC manager and notifying the agency's Director of Finance of the transaction. The OVSC manager then composes a letter to the importer and mails the letter with the enclosed check, consuming another 10 minutes of time. On a monthly basis, the finance manager expends 5 minutes reviewing for accuracy the agency's bank statement transactions.

This phase of the process consumes one hour and 45 minutes of professional staff time and costs the agency for FY 2007 a total of $157.30. We estimate for FY 2008 that this cost will increase to $162.13, based on a projected 3.79% hourly rate increase for both contractor and professional staff.

As previously stated, additional direct costs include computer equipment and maintenance costs, which we have calculated at $1.86/hour. We have determined that one hour and 25 minutes of computer time is needed to accomplish the tasks associated with processing each cash deposit, yielding a total of $158.10. We also estimate that the agency will spend $5.75 for the toll costs incurred for three telephone transmissions (*i.e.*, faxing the formal agreement to the importer for signature; faxing a letter informing CBP that the vehicle's entry is approved; and faxing a letter notifying the importer to proceed with the vehicle's entry) and $3.00 postage for mailing the check to the importer.

Based on the above factors, NHTSA proposes to charge $598.00 as the fee to recover the costs it incurs for each vehicle imported during FY 2008, for which the importer submits a cash deposit in lieu of a DOT conformance bond. This fee would have to be tendered with each cash deposit submitted to the agency in lieu of a bond. The time expended, hourly rates, direct and indirect costs, and proposed fees to reimburse NHTSA are summarized in Appendix A of this notice.

F. Effective Date

Section 30141(e) of Title 49, U.S. Code requires the amount of fees imposed under section 30141(a) to be reviewed, and, if appropriate, adjusted by NHTSA at least every two years. It also requires that the fee for each fiscal year be established before the beginning of that year. Any final rule on this proposal must therefore be issued not later than September 30, 2008 so that the fee it establishes will be applicable in Fiscal Year 2009, which begins on October 1, 2008.

G. Appendix A

The following tables provide an itemization of the time expended, hourly rates, direct and indirect costs, and proposed fees to reimburse NHTSA for the costs of receiving, processing, handling, and disbursing cash deposits:

Step of process	Staff*	Time mins.	FY 07 Rate	FY 07 Cost	FY 08 Rate	FY 08 Cost
Receipt, Processing, and Handling of Cash Deposits (Cash)						
Cash received and delivered	C	10	$50.50	$8.42	$51.77	$8.63
Agreement obligations discussed with importer	E	10	$89.88	$14.98	$92.64	$15.44
Prepare formal agreement	E	10	$89.88	$14.98	$92.64	$15.44
Agreement faxed for importer's signature				Toll charge		Toll charge
Signed agreement received and delivered	C	5	$50.50	$4.21	$51.77	$4.31
Prepare agreement approval memo	E	20	$89.88	$29.96	$92.64	$30.88
Agreement review and signature	E	10	$98.52	$16.42	$101.61	$16.94
	E	10	$98.52	$16.42	$101.61	$16.94
	E	10	$98.52	$16.42	$101.61	$16.94
Prepare CBP letter approving vehicle entry	E	10	$89.88	$14.98	$92.64	$15.44
Fax CBP letter				Toll charge		Toll charge
Prepare importer letter approving vehicle entry	E	10	$89.88	$14.98	$92.64	$15.44
Transmit letter to importer by fax				Toll charge		Toll charge
Create database record	C	5	$50.50	$4.21	$51.77	$4.31
Prepare and deliver memo/cash to finance	E	10	$89.88	$14.98	$92.64	$15.44
Deposit cash in bank	E	60	$89.88	$89.88	$92.64	$92.64
Subtotal				$260.84		$268.80
*Staff Notes: (C) is contractor and (E) is employee.						
Handling and Disbursement of Cash Deposits (Cash)						
Importer notifies NHTSA that vehicle conformance obligations are met.	E	10	$89.88	$14.98	$92.64	$15.44
Prepare memo requesting check to importer	E	10	$89.88	$14.98	$92.64	$15.44
Withdraw funds from bank by check	E	60	$89.88	$89.88	$92.64	92.64
Deliver check	E	5	$89.88	$7.49	$92.64	$7.72
Notify NHTSA Finance Director	E	5	$89.88	$7.49	$92.64	$7.72
Prepare letter with check enclosure	E	10	$89.88	$14.98	$92.64	$15.44
Mail letter and check to importer				postage		postage
Review monthly bank statements	E	5	$89.88	$7.49	$92.64	$7.72
Subtotal				$157.30		$162.13
*Staff Notes: (C) is contractor and (E) is employee.						
Other Direct Costs						
Direct costs		Time Mins.	FY 07 Rate	FY 07 Cost	FY 08 Rate	FY 08 Cost
Computer and Computer Maintenance		85	$1.86/hr	$158.10	$1.86/hr	$158.10
Postage			$3.00	$3.00	$3.00	$3.00
Toll Calls (3)			$1.92	$5.75	$1.92	$5.75
Subtotal				$166.85		$166.85
Subtotals:						
Subtotal				$260.84		$268.80
Subtotal				$157.30		$162.13
Subtotal				$166.85		$166.85
Total				$584.99		$597.78

Rulemaking Analyses

A. Executive Order 12866 and DOT Regulatory Policies and Procedures

Executive Order 12866, ''Regulatory Planning and Review'' (58 FR 51735, October 4, 1993), provides for making determinations as to whether a regulatory action is ''significant'' and therefore subject to Office of Management and Budget (OMB) review and subject to the requirements of the Executive Order. The Order defines a ''significant regulatory action'' as one that is likely to result in a rule that may:

(1) Have an annual effect on the economy of $100 million or more or adversely affect in a material way the economy, a sector of the economy, productivity, competition, jobs, the environment, public health or safety, or State, local, or Tribal governments or communities;

(2) Create a serious inconsistency or otherwise interfere with an action taken or planned by another agency;

(3) Materially alter the budgetary impact of entitlements, grants, user fees, or loan programs or the rights and obligations of recipients thereof; or

(4) Raise novel legal or policy issues arising out of legal mandates, the President's priorities, or the principles set forth in the Executive Order.

NHTSA has considered the impact of this rulemaking action under Executive Order 12866 and the Department of Transportation's regulatory policies and procedures. This rulemaking is not significant. Accordingly, the Office of Management and Budget has not reviewed this rulemaking document under Executive Order 12886. Further, NHTSA has determined that the rulemaking is not significant under

Department of Transportation's regulatory policies and procedures. Based on the level of the fees and the volume of affected vehicles, NHTSA currently anticipates that the costs of the final rule would be so minimal as not to warrant preparation of a full regulatory evaluation. The action does not involve any substantial public interest or controversy. There would be no substantial effect upon State and local governments. There would be no substantial impact upon a major transportation safety program. A regulatory evaluation analyzing the economic impact of the final rule establishing the RI program, adopted on September 29, 1989, was prepared, and is available for review in the docket.

B. Regulatory Flexibility Act

Pursuant to the Regulatory Flexibility Act (5 U.S.C. 601 *et seq.*, as amended by the Small Business Regulatory Enforcement Fairness Act (SBREFA) of 1996), whenever an agency is required to publish a notice of proposed rulemaking for any proposed or final rule, it must prepare and make available for public comment a regulatory flexibility analysis that describes the effect of the rule on small entities (i.e., small businesses, small organizations, and small governmental jurisdictions). The Small Business Administration's regulations at 13 CFR part 121 define a small business, in part, as a business entity ''which operates primarily within the United States.'' See 13 CFR 121.105(a). No regulatory flexibility analysis is required if the head of an agency certifies that the rule would not have a significant economic impact on a substantial number of small entities. The SBREFA amended the Regulatory Flexibility Act to require Federal agencies to provide a statement of the factual basis for certifying that a rule would not have a significant economic impact on a substantial number of small entities.

The agency has considered the effects of this proposed rulemaking under the Regulatory Flexibility Act, and certifies that if the proposed amendments are adopted they would not have a significant economic impact upon a substantial number of small entities.

The following is NHTSA's statement providing the factual basis for the certification (5 U.S.C. 605(b)). The proposed amendment would primarily affect entities that currently modify nonconforming vehicles and which are small businesses within the meaning of the Regulatory Flexibility Act. Of the 73 such entities that are currently licensed with NHTSA, only several have furnished the agency with cash deposits in lieu of sureties on DOT conformance bonds. Despite the fact that they qualify as small businesses, the agency has no reason to believe that these companies would be unable to pay the fee proposed by this action. Moreover, consistent with prevailing industry practices, the fee should be passed through to the ultimate purchasers of any vehicle for which a cash deposit in lieu of sureties is given to the agency. The cost to owners or purchasers of these vehicles may be expected to increase to the extent necessary to reimburse the RI for the fee payable to the agency for the cost of processing a cash deposit.

Governmental jurisdictions would not be affected at all since they are generally neither importers nor purchasers of nonconforming motor vehicles.

C. Executive Order 13132 (Federalism)

Executive Order 13132 on ''Federalism'' requires NHTSA to develop an accountable process to ensure ''meaningful and timely input by State and local officials in the development of regulatory policies that have Federalism implications.'' Executive Order 13132 defines the term ''policies that have federalism implications'' to include regulations that have ''substantial direct effects on the States, on the relationship between the national government and the States, or on the distribution of power and responsibilities among the various levels of government.'' Under Executive Order 13132, NHTSA may not issue a regulation that has federalism implications, that imposes substantial direct compliance costs, and that is not required by statute, unless the Federal government provides the funds necessary to pay the direct compliance costs incurred by State and local governments, or NHTSA consults with State and local officials early in the process of developing the proposed regulation.

The proposed rule would not have substantial direct effects on the States, on the relationship between the national government and the States, or on the distribution of power and responsibilities among the various levels of government as specified in Executive Order 13132. Thus, the requirements of section 6 of the Executive Order do not apply to this rulemaking action.

D. National Environmental Policy Act

NHTSA has analyzed this action for purposes of the National Environmental Policy Act. The action would not have a significant effect upon the environment because it is anticipated that the annual volume of motor vehicles imported through RIs would not vary significantly from that existing before promulgation of the rule.

E. Executive Order 12988 (Civil Justice Reform)

Pursuant to Executive Order 12988 ''Civil Justice Reform,'' this agency has considered whether this proposed rule would have any retroactive effect. NHTSA concludes that this proposed rule would not have any retroactive effect. Judicial review of a rule based on this proposal may be obtained pursuant to 5 U.S.C. 702. That section does not require that a petition for reconsideration be filed prior to seeking judicial review.

F. Unfunded Mandates Reform Act of 1995

Section 202 of the Unfunded Mandates Reform Act of 1995 (UMRA) requires agencies to prepare a written assessment of the costs, benefits, and other effects of proposed or final rules that include a Federal mandate likely to result in the expenditure by State, local, or tribal governments, in the aggregate, or by the private sector, of more than $100 million annually (adjusted for inflation with the base year of 1995). Before promulgating a rule for which a written assessment is needed, Section 205 of the UMRA generally requires NHTSA to identify and consider a reasonable number of regulatory alternatives and to adopt the least costly, most cost-effective, or least burdensome alternative that achieves the objectives of the rule. The provisions of Section 205 do not apply when they are inconsistent with applicable law. Moreover, Section 205 allows NHTSA to adopt an alternative other than the least costly, most cost-effective or least burdensome alternative if the agency publishes with the final rule an explanation why that alternative was not adopted. Because a final rule based on this proposal would not require the expenditure of resources beyond $100 million annually, this action is not subject to the requirements of Sections 202 and 205 of the UMRA.

G. Plain Language

Executive Order 12866 and the President's memorandum of June 1, 1998, require each agency to write all rules in plain language. Application of the principles of plain language includes consideration of the following questions:

—Have we organized the material to suit the public's needs?

—Are the requirements in the proposed rule clearly stated?

—Does the proposed rule contain technical language or jargon that is unclear?
—Would a different format (grouping and order of sections, use of heading, paragraphing) make the rule easier to understand?
—Would more (but shorter) sections be better?
—Could we improve clarity by adding tables, lists, or diagrams?
—What else could we do to make the rule easier to understand?

If you have any responses to these questions, please include them in your comments on this document.

H. Paperwork Reduction Act

Under the Paperwork Reduction Act of 1995, a person is not required to respond to a collection of information by a Federal agency unless the collection displays a valid OMB control number. This proposal would require no information collections.

I. Executive Order 13045

Executive Order 13045 applies to any rule that (1) is determined to be ''economically significant'' as defined under E.O. 12866, and (2) concerns an environmental, health, or safety risk that NHTSA has reason to believe may have a disproportionate effect on children. If the regulatory action meets both criteria, we must evaluate the environmental health or safety effects of the planned rule on children, and explain why the planned rule is preferable to other potentially effective and reasonably feasible alternatives considered by us. This rulemaking is not economically significant.

J. National Technology Transfer and Advancement Act

Section 12(d) of the National Technology Transfer and Advancement Act of 1995 (NTTAA), Public Law 104–113, section 12(d) (15 U.S.C. 272) directs NHTSA to use voluntary consensus standards in its regulatory activities unless doing so would be inconsistent with applicable law or otherwise impractical. Voluntary consensus standards are technical standards (e.g., materials specifications, test methods, sampling procedures, and business practices) that are developed or adopted by voluntary consensus standards bodies, such as the Society of Automotive Engineers (SAE). The NTTAA directs the agency to provide Congress, through the OMB, explanations when we decide not to use available and applicable voluntary consensus standards.

After conducting a search of available sources, we have concluded that there are no voluntary consensus standards applicable to this proposed rule.

K. Public Participation

How Do I Prepare and Submit Comments?

Your comments must be written in English. To ensure that your comments are correctly filed in the Docket, please include the docket number of this document in your comments.

Your comments must not be more than 15 pages long (49 CFR 553.21). We established this limit to encourage you to write your primary comments in a concise fashion. However, you may attach necessary additional documents to your comments. There is no limit on the length of the attachments.

Please submit two copies of your comments, including the attachments, to Docket Management identified at the beginning of this document, under **ADDRESSES**.

How Can I Be Sure That My Comments Were Received?

If you wish Docket Management to notify you upon its receipt of your comments, enclose a self-addressed, stamped postcard in the envelope containing your comments. Upon receiving your comments, Docket Management will return the postcard by mail.

How Do I Submit Confidential Business Information?

If you wish to submit any information under a claim of confidentiality, you should submit three copies of your complete submission, including the information you claim to be confidential business information, to the Chief Counsel, NHTSA, at the address given at the beginning of this document under **FOR FURTHER INFORMATION CONTACT**. In addition, you should submit two copies from which you have deleted the claimed confidential business information, to Docket Management at the address given at the beginning of this document under **ADDRESSES**. When you send a comment containing information claimed to be confidential business information, you should include a cover letter setting forth the information specified in our confidential business information regulation, 49 CFR, part 512.

Will the Agency Consider Late Comments?

We will consider all comments that Docket Management receives before the close of business on the comment closing date identified at the beginning of this notice under **DATES**. To the extent possible, we will also consider comments that Docket Management receives after that date. If Docket Management receives a comment too late for us to consider in developing a final rule, we will consider that comment as an informal suggestion for future rulemaking action.

How Can I Read the Comments Submitted by Other People?

You may read the comments received by Docket Management at the address and times given at the beginning of this document under **ADDRESSES**.

You may also see the comments on the Internet. To read the comments on the Internet, take the following steps:

(1) Go to the Federal Docket Management System (FDMS) Web page *http://www.regulations.gov.*

(2) On that page, click on ''search for dockets.''

(3) On the next page (*http://www.regulations.gov/fdmspublic/component/main*), select NATIONAL HIGHWAY TRAFFIC SAFETY ADMINISTRATION from the drop-down menu in the Agency field, enter the Docket ID number and title shown at the heading of this document, and select ''RULEMAKING'' from the drop-down menu in the Type field.

(4) After entering that information, click on ''submit.''

(5) The next page contains docket summary information for the docket you selected. Click on the comments you wish to see. You may download the comments. Although the comments are imaged documents, instead of the word processing documents, the ''pdf'' versions of the documents are word searchable. Please note that even after the comment closing date, we will continue to file relevant information in the Docket as it becomes available. Further, some people may submit late comments. Accordingly, we recommend that you periodically search the Docket for new material.

L. Regulation Identifier Number (RIN)

The Department of Transportation assigns a regulation identifier number (RIN) to each regulatory action listed in the Unified Agenda of Federal Regulations. The Regulatory Information Service Center publishes the Unified Agenda in April and October of each year. You may use the RIN that appears in the heading on the first page of this document to find this action in the Unified Agenda.

In consideration of the foregoing, NHTSA proposes to amend 49 CFR part 594 as follows:

List of Subjects in 49 CFR Part 594

Administrative practice and procedure, Imports, Motor vehicle safety, Motor vehicles.

In consideration of the foregoing, the agency proposes to amend part 594 in Title 49 of the Code of Federal Regulations as follows:

PART 594—SCHEDULE OF FEES AUTHORIZED BY 49 U.S.C. 30141

1. The authority citation for part 594 continues to read as follows:

Authority: 49 U.S.C. 30141, 31 U.S.C. 9701; delegation of authority at 49 CFR 1.50.

2. Section 594.9 is amended by;
a. Revising the section heading;
b. Adding paragraph (d); and
c. Adding paragraph (e); to read as follows:

§ 594.9 Fee for reimbursement of bond processing costs and costs for processing offers of cash deposits or obligations of the United States in lieu of sureties on bonds.

* * * * *

(d) Each importer must pay a fee based upon the direct and indirect costs the agency incurs for receipt, processing, handling, and disbursement of cash deposits or obligations of the United States in lieu of sureties on bonds that the importer submits as authorized by 591.10 of this chapter in lieu of a conformance bond required under 591.6(c).

(e) The fee for each vehicle imported on and after October 1, 2008, for which cash deposits or obligations of the United States is furnished in lieu of a conformance bond, is $598.00.

* * * * *

Issued on: November 13, 2007.

Ronald L. Medford,

Senior Associate Administrator for Vehicle Safety.

[FR Doc. E7–22532 Filed 11–20–07; 8:45 am]

BILLING CODE 4910–59–P

DEPARTMENT OF COMMERCE

National Oceanic and Atmospheric Administration

50 CFR Part 679

[Docket No. 070711313–7637–03]

RIN 0648–AV62

Fisheries of the Exclusive Economic Zone Off Alaska; Groundfish, Crab, Salmon, and Scallop Fisheries of the Bering Sea and Aleutian Islands Management Area

AGENCY: National Marine Fisheries Service (NMFS), National Oceanic and Atmospheric Administration (NOAA), Commerce.

ACTION: Proposed rule; request for comments.

SUMMARY: NMFS issues a proposed rule that would implement Amendment 88 to the Fishery Management Plan for Groundfish of the Bering Sea and Aleutian Islands Management Area. This amendment, if approved, would revise the Aleutian Islands Habitat Conservation Area (AIHCA) boundary to allow nonpelagic trawling in an area historically fished and to prohibit nonpelagic trawling in an area of known coral and sponge occurrence. This action is necessary to ensure the AIHCA protects areas of coral and sponge habitat from the potential effects of nonpelagic trawling and allow nonpelagic trawling in areas historically fished and without evidence of coral and sponge occurrence.

DATES: Written comments must be received by January 7, 2008.

ADDRESSES: You may submit comments, identified by 0648–AV62, by any one of the following methods:

- Electronic Submissions: Submit all electronic public comments via the Federal eRulemaking Portal *http://www.regulations.gov*;
- Mail: Sue Salveson, Assistant Regional Administrator, Sustainable Fisheries Division, Alaska Region, NMFS, P.O. Box 21668, Juneau, AK 99802; Attn: Ellen Sebastian, Records Officer;
- Hand delivery: 709 West 9th Street, Room 420A, Juneau, AK; or
- Fax: 907–586–7557, Attention: Sue Salveson.

Instructions: All comments received are a part of the public record and will generally be posted to *http://www.regulations.gov* without change. All Personal Identifying Information (for example, name, address, etc.) voluntarily submitted by the commenter may be publicly accessible. Do not submit Confidential Business Information or otherwise sensitive or protected information. NMFS will accept anonymous comments. Attachments to electronic comments will be accepted in Microsoft Word, Excel, WordPerfect, or Adobe PDF file formats only.

Copies of the map of the AIHCA and the Environmental Assessment/Regulatory Impact Review/Initial Regulatory Flexibility Analysis (EA/RIR/IRFA) for this action may be obtained from the addresses stated above or from the Alaska Region NMFS website at *http://www.fakr.noaa.gov.*

FOR FURTHER INFORMATION CONTACT: Melanie Brown, 907–586–7228 or email at *melanie.brown@noaa.gov*.

SUPPLEMENTARY INFORMATION: The groundfish, crab, scallop, and salmon fisheries in the exclusive economic zone (EEZ) off Alaska are managed under their respective fishery management plans (FMPs). The North Pacific Fishery Management Council (Council) prepared the FMPs under the authority of the Magnuson-Stevens Fishery Conservation and Management Act (Magnuson-Stevens Act). Regulations implementing the FMPs appear at 50 CFR parts 679 and 680. General regulations governing U.S. fisheries also appear at 50 CFR part 600. The groundfish fishery restrictions for the AIHCA described in the groundfish FMP are implemented by regulations at 50 CFR part 679. Revisions to the AIHCA also are described in the proposed Amendment 23 to the FMP for BSAI King and Tanner Crabs, Amendment 12 to the FMP for Scallop Fisheries off Alaska, and Amendment 9 to the FMP for Salmon Fisheries in the Exclusive Economic Zone off the Coast of Alaska. No regulatory amendments are needed for implementing these FMP amendments due to a prohibition on using nonpelagic trawl gear in the crab, scallop, and salmon fisheries.

The Council has submitted the amendments for the AIHCA revision for review by the Secretary of Commerce, and a Notice of Availability of the amendments was published in the **Federal Register** on November 13, 2007 (72 FR 63871), with comments on the amendments invited through January 14, 2008. Comments may address the FMP amendments, the proposed rule, or both, but must be received by January 7, 2008, to be considered in the approval/disapproval decision on the FMP amendments. All comments received by that time, whether specifically directed to the FMP amendments or to the proposed rule, will be considered in the approval/disapproval decision on the FMP amendments.

Background

In 2006, NMFS implemented essential fish habitat (EFH) protection measures for the Aleutian Islands subarea and adjacent State of Alaska (State) waters (71 FR 36694, June 28, 2006, and corrected at 72 FR 63500, November 9, 2007). The background on the development of the EFH protection measures is available in the proposed rule for that action (71 FR 14470, March 22, 2006). The EFH protection measures prohibited nonpelagic trawling within the AIHCA. The AIHCA is the Aleutian

Islands subarea and adjacent State waters except for specific sites that remain open to nonpelagic trawling. Locations open to nonpelagic trawling in the AIHCA included areas without known occurrences of coral and sponge habitat and where nonpelagic trawling previously occurred. A map of the AIHCA is available from the NMFS Alaska Region website at *http://www.fakr.noaa.gov/habitat/efh/aihca.pdf*.

In March 2007, the Council recommended two revisions to the boundaries of the AIHCA. These revisions were developed in response to corrections provided by the nonpelagic trawl industry regarding fishing locations and additional information on coral and sponge occurrence in the Aleutian Islands.

The two revisions would revise the AIHCA boundaries near Agattu Island and Buldir Island (see figure below). The proposed rule would prohibit nonpelagic trawling in an area west of Buldir Island and would permit nonpelagic trawling in an area north of Agattu Island.

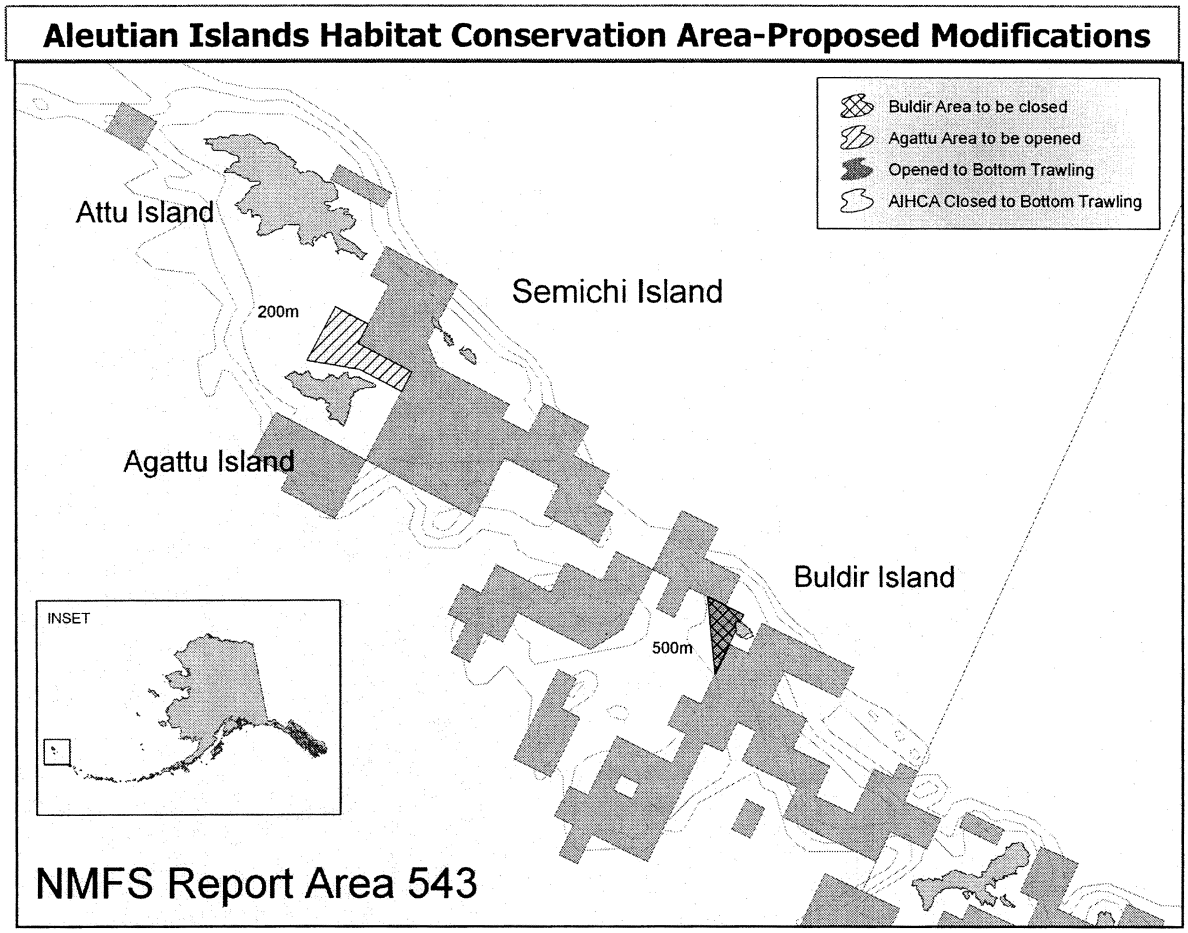

NMFS is proposing to open the area near Agattu Island to nonpelagic trawling because no evidence of coral or sponge habitat exists in this area, and nonpelagic trawling historically has occurred in this location. NMFS is proposing to close the area near Buldir Island because NMFS surveys show corals and sponges occur in this area. Anecdotal information also indicated that nonpelagic trawlers avoid the proposed Buldir Island closure area to protect fishing gear from damage by bottom structures. Details of the fishing history and biological features of these sites are available in the EA/RIR/IRFA for this action (see **ADDRESSES**).

The proposed rule would revise the coordinates for the boundaries of the AIHCA near Agattu Island and Buldir Island. Table 24 to 50 CFR part 679 contains coordinates for sites where nonpelagic trawling is permitted in the AIHCA. Table 24 would be revised to specify the coordinates near Agattu and Buldir Islands to adjust the boundaries of the AIHCA to allow for nonpelagic trawling near Agattu Island and prohibit nonpelagic trawling near Buldir Island, as shown in the figure above. The proposed rule would modify the coordinates for the Buldir and Semichi areas listed on Table 24. The Semichi area includes the waters near Agattu Island proposed to be opened to nonpelagic trawling. Because the proposed rule would divide the Buldir Island open area into two areas to allow for the closure area, the proposed rule would add the West Buldir site to Table 24. The proposed rule also would remove the site number for each site because the site number serves no additional purpose in the identification of the site beyond that provided by the site name. The proposed rule also would remove from Table 24 two redundant sets of coordinates for the Buldir site because they are not necessary to accurately describe the boundaries.

Classification

Pursuant to section 304 (b)(1)(A) of the Magnuson-Stevens Act, the NMFS Assistant Administrator has determined that this proposed rule is consistent with Amendment 88 to the FMP for Groundfish of the BSAI, other provisions of the Magnuson-Stevens

Act, and other applicable law, subject to further consideration after public comment.

This proposed rule has been determined to be not significant for the purposes of Executive Order 12866.

NMFS prepared an initial regulatory flexibility analysis (IRFA), as required by section 603 of the Regulatory Flexibility Act (RFA). The IRFA describes the economic impact this proposed rule, if adopted, would have on small entities. Descriptions of the action, the reasons it is under consideration, and its objectives and legal basis, are contained earlier in the preamble and in the SUMMARY section of the preamble. A summary of the analysis follows. A copy of this analysis is available from NMFS (see **ADDRESSES**).

Vessels were considered small, according to the Small Business Administration (SBA) criteria, if they had estimated 2004 gross revenues less than or equal to $4 million, and were not known to be affiliated with other firms whose combined receipts exceeded $4 million.

Ten vessels that qualify as small entities under SBA criteria are directly regulated by this action. Six of these vessels are catcher vessels, and four are catcher/processors. Average gross revenues in 2005 were about $1,400,000 for the catcher vessels and about $2,200,000 for the catcher/processors.

This regulation does not impose new recordkeeping and reporting requirements on the regulated small entities.

The IRFA did not reveal any Federal rules that duplicate, overlap, or conflict with the proposed action.

The Council considered one alternative (Alternative 1, no action) to the preferred alternative for this action. The boundaries of the opened and closed areas were based on information provided by the fishing industry regarding historical fishing activity and on NMFS survey information regarding coral and sponge location. This is the method of boundary identification used in the original EFH rule for the AIHCA. Because this is a correction to that rule, the identification of boundaries for the opened and closed areas for this action is based on the same method. No other alternatives were identified because the action is an adjustment to the AIHCA boundaries based on corrected fishing information and NMFS survey information, and no additional information regarding adjustments to the AIHCA was available. No other boundaries of the opened or closed areas for the AIHCA were considered because no additional information was available to support other boundary alternatives.

The status quo condition of the fishery should be based on the 2006 fishery because of the recent implementation of the EFH protection measures (71 FR 36694, June 28, 2006), but 2006 data were not yet available for the analysis. Therefore, 2001 through 2005 data were used as a proxy for status quo. Vessel monitoring system (VMS) and NMFS inseason catch data were used to analyze the catches in the proposed Agattu and Buldir Islands opened and closed areas. These types of data allowed for determining the fine scale location of fishing activities in combination with the estimated harvest from the proposed opened and closed areas.

The no action alternative would not meet the objectives of this action. The status quo alternative would allow fishing in an area of known coral and sponge occurrence and would prohibit fishing in an area that had historical fishing activity. This would not meet the intent of the Council for the AIHCA and does not meet the objectives of the action to provide continued fishing where historical fishing activity has occurred and to prohibit fishing where coral and sponges occur. Moreover, the IRFA did not identify discernable adverse impacts to small entities from this action. In fact, as noted in the preamble, this action may have positive benefits for small entities because more historical fishing activity occurred in the area to be opened by this action, than in the area to be closed. Vessels that are not small entities will likely experience the same benefits as small entities by being allowed to fish in an area historically fished, and no adverse impacts are expected for these vessels.

List of Subjects in 50 CFR Part 679

Alaska, Fisheries, Recordkeeping and reporting requirements.

Dated: November 16, 2007.

Samuel D. Rauch III

Deputy Assistant Administrator for Regulatory Programs, National Marine Fisheries Service.

For reasons set out in the preamble, NMFS proposes to amend 50 CFR part 679 as follows:

PART 679—FISHERIES OF THE EXCLUSIVE ECONOMIC ZONE OFF ALASKA

1. The authority citation for part 679 continues to read as follows:

Authority: 16 U.S.C. 773 *et seq.*; 1801 *et seq.*; 3631 *et seq.*; Pub. L. 108–447

2. Revise Table 24 to part 679 to read as follows:

BILLING CODE 3510–22–S

Table 24 to Part 679--Except as Noted, Locations in the Aleutian Islands Habitat Conservation Area Open to Nonpelagic Trawl Fishing

Name	Latitude			Longitude			Footnote
Islands of 4 Mountains North	52	54.00	N	170	18.00	W	
	52	54.00	N	170	24.00	W	
	52	42.00	N	170	24.00	W	
	52	42.00	N	170	18.00	W	
Islands of 4 Mountains West	53	12.00	N	170	0.00	W	
	53	12.00	N	170	12.00	W	
	53	6.00	N	170	12.00	W	
	53	6.00	N	170	30.00	W	
	53	0.00	N	170	30.00	W	
	53	0.00	N	170	48.00	W	
	52	54.00	N	170	48.00	W	
	52	54.00	N	170	54.00	W	
	52	48.00	N	170	54.00	W	
	52	48.00	N	170	30.00	W	
	52	54.00	N	170	30.00	W	
	52	54.00	N	170	24.00	W	
	53	0.00	N	170	24.00	W	
	53	0.00	N	170	0.00	W	
Yunaska I. South	52	24.00	N	170	30.00	W	
	52	24.00	N	170	54.00	W	
	52	12.00	N	170	54.00	W	
	52	12.00	N	170	30.00	W	
Amukta I. North	52	54.00	N	171	6.00	W	
	52	54.00	N	171	30.00	W	
	52	48.00	N	171	30.00	W	
	52	48.00	N	171	36.00	W	
	52	42.00	N	171	36.00	W	
	52	42.00	N	171	12.00	W	
	52	48.00	N	171	12.00	W	
	52	48.00	N	171	6.00	W	
Amukta Pass North	52	42.00	N	171	42.00	W	
	52	42.00	N	172	6.00	W	

Name	Latitude			Longitude			Footnote
	52	36.00	N	172	6.00	W	
	52	36.00	N	171	42.00	W	
Amlia North/Seguam	52	42.00	N	172	12.00	W	
	52	42.00	N	172	30.00	W	
	52	30.00	N	172	30.00	W	
	52	30.00	N	172	36.00	W	
	52	36.00	N	172	36.00	W	
	52	36.00	N	172	42.00	W	
	52	39.00	N	172	42.00	W	
	52	39.00	N	173	24.00	W	
	52	36.00	N	173	30.00	W	
	52	36.00	N	173	36.00	W	
	52	30.00	N	173	36.00	W	
	52	30.00	N	174	0.00	W	
	52	27.00	N	174	0.00	W	
	52	27.00	N	174	6.00	W	
	52	23.93	N	174	6.00	W	1
	52	13.71	N	174	6.00	W	
	52	12.00	N	174	6.00	W	
	52	12.00	N	174	0.00	W	
	52	9.00	N	174	0.00	W	
	52	9.00	N	173	0.00	W	
	52	6.00	N	173	0.00	W	
	52	6.00	N	172	45.00	W	
	51	54.00	N	172	45.00	W	
	51	54.00	N	171	48.00	W	
	51	48.00	N	171	48.00	W	
	51	48.00	N	171	42.00	W	
	51	54.00	N	171	42.00	W	
	52	12.00	N	171	42.00	W	
	52	12.00	N	171	48.00	W	
	52	18.00	N	171	48.00	W	
	52	18.00	N	171	42.00	W	
	52	30.00	N	171	42.00	W	
	52	30.00	N	171	54.00	W	
	52	24.00	N	171	54.00	W	
	52	24.00	N	172	0.00	W	

Name	Latitude			Longitude			Footnote
	52	12.00	N	172	0.00	W	
	52	12.00	N	172	42.00	W	
	52	18.00	N	172	42.00	W	
	52	18.00	N	172	37.13	W	2
	52	18.64	N	172	36.00	W	
	52	24.00	N	172	36.00	W	
	52	24.00	N	172	12.00	W	6
Amlia North/Seguam donut	52	33.00	N	172	42.00	W	5
	52	33.00	N	173	6.00	W	5
	52	30.00	N	173	6.00	W	5
	52	30.00	N	173	18.00	W	5
	52	24.00	N	173	18.00	W	5
	52	24.00	N	172	48.00	W	5
	52	30.00	N	172	48.00	W	5
	52	30.00	N	172	42.00	W	5,7
Atka/Amlia South	52	0.00	N	173	18.00	W	
	52	0.00	N	173	54.00	W	
	52	3.08	N	173	54.00	W	2
	52	6.00	N	173	58.00	W	
	52	6.00	N	174	6.00	W	
	52	0.00	N	174	18.00	W	
	52	0.00	N	174	12.00	W	
	51	54.00	N	174	12.00	W	
	51	54.00	N	174	18.00	W	
	52	6.00	N	174	18.00	W	
	52	6.00	N	174	21.86	W	1
	52	4.39	N	174	30.00	W	
	52	3.09	N	174	30.00	W	1
	52	2.58	N	174	30.00	W	
	52	0.00	N	174	30.00	W	
	52	0.00	N	174	36.00	W	
	51	54.00	N	174	36.00	W	
	51	54.00	N	174	54.00	W	
	51	48.00	N	174	54.00	W	
	51	48.00	N	173	24.00	W	
	51	54.00	N	173	24.00	W	

Name	Latitude			Longitude			Footnote
	51	54.00	N	173	18.00	W	
Atka I. North	52	30.00	N	174	24.00	W	
	52	30.00	N	174	30.00	W	
	52	24.00	N	174	30.00	W	
	52	24.00	N	174	48.00	W	
	52	18.00	N	174	48.00	W	
	52	18.00	N	174	54.00	W	
	52	12.00	N	174	54.00	W	
	52	12.00	N	175	18.00	W	
	52	1.14	N	175	18.00	W	1
	52	2.19	N	175	12.00	W	
	52	6.00	N	175	12.00	W	
	52	6.00	N	174	55.51	W	1
	52	6.00	N	174	54.04	W	
	52	6.00	N	174	48.00	W	
	52	12.00	N	174	48.00	W	
	52	12.00	N	174	26.85	W	1
	52	12.94	N	174	18.00	W	
	52	16.80	N	174	18.00	W	1
	52	17.06	N	174	18.00	W	
	52	17.64	N	174	18.00	W	1
	52	18.00	N	174	19.12	W	
	52	18.00	N	174	20.04	W	1
	52	19.37	N	174	24.00	W	
Atka I. South	52	0.68	N	175	12.00	W	2
	52	0.76	N	175	18.00	W	
	52	0.00	N	175	18.00	W	
	52	0.00	N	175	12.00	W	
Adak I. East	52	12.00	N	176	36.00	W	
	52	12.00	N	176	0.00	W	
	52	2.59	N	176	0.00	W	1
	52	1.79	N	176	0.00	W	
	52	0.00	N	176	0.00	W	
	52	0.00	N	175	48.00	W	
	51	57.74	N	175	48.00	W	1
	51	55.48	N	175	48.00	W	
	51	54.00	N	175	48.00	W	

Name	Latitude			Longitude			Footnote
	51	54.00	N	176	0.00	W	1
	51	53.09	N	176	6.00	W	
	51	51.40	N	176	6.00	W	1
	51	49.67	N	176	6.00	W	
	51	48.73	N	176	6.00	W	1
	51	48.00	N	176	6.36	W	
	51	48.00	N	176	9.82	W	1
	51	48.00	N	176	9.99	W	
	51	48.00	N	176	16.19	W	1
	51	48.00	N	176	24.71	W	
	51	48.00	N	176	25.71	W	1
	51	45.58	N	176	30.00	W	
	51	42.00	N	176	30.00	W	
	51	42.00	N	176	33.92	W	1
	51	41.22	N	176	42.00	W	
	51	30.00	N	176	42.00	W	
	51	30.00	N	176	36.00	W	
	51	36.00	N	176	36.00	W	
	51	36.00	N	176	0.00	W	
	51	42.00	N	176	0.00	W	
	51	42.00	N	175	36.00	W	
	51	48.00	N	175	36.00	W	
	51	48.00	N	175	18.00	W	
	51	51.00	N	175	18.00	W	
	51	51.00	N	175	0.00	W	
	51	57.00	N	175	0.00	W	
	51	57.00	N	175	18.00	W	
	52	0.00	N	175	18.00	W	
	52	0.00	N	175	30.00	W	
	52	3.00	N	175	30.00	W	
	52	3.00	N	175	36.00	W	
Cape Adagdak	52	6.00	N	176	12.44	W	
	52	6.00	N	176	30.00	W	
	52	3.00	N	176	30.00	W	
	52	3.00	N	176	42.00	W	
	52	0.00	N	176	42.00	W	
	52	0.00	N	176	46.64	W	

Name	Latitude			Longitude			Footnote
	51	57.92	N	176	46.51	W	1
	51	54.00	N	176	37.07	W	
	51	54.00	N	176	18.00	W	
	52	0.00	N	176	18.00	W	
	52	0.00	N	176	12.00	W	
	52	2.85	N	176	12.00	W	1
	52	4.69	N	176	12.44	W	
Cape Kiguga/Round Head	52	0.00	N	176	53.00	W	
	52	0.00	N	177	6.00	W	
	51	56.06	N	177	6.00	W	1
	51	54.00	N	177	2.84	W	
	51	54.00	N	176	54.00	W	
	51	48.79	N	176	54.00	W	1
	51	48.00	N	176	50.35	W	
	51	48.00	N	176	43.14	W	1
	51	55.69	N	176	48.59	W	
	51	55.69	N	176	53.00	W	
Adak Strait South	51	42.00	N	176	55.77	W	
	51	42.00	N	177	12.00	W	
	51	30.00	N	177	12.00	W	
	51	36.00	N	177	6.00	W	
	51	36.00	N	177	3.00	W	
	51	39.00	N	177	3.00	W	
	51	39.00	N	177	0.00	W	
	51	36.00	N	177	0.00	W	
	51	36.00	N	176	57.72	W	3
Bay of Waterfalls	51	38.62	N	176	54.00	W	
	51	36.00	N	176	54.00	W	
	51	36.00	N	176	55.99	W	3
Tanaga/Kanaga North	51	54.00	N	177	12.00	W	
	51	54.00	N	177	19.93	W	
	51	51.71	N	177	19.93	W	
	51	51.65	N	177	29.11	W	
	51	54.00	N	177	29.11	W	
	51	54.00	N	177	30.00	W	
	51	57.00	N	177	30.00	W	

Name	Latitude			Longitude			Footnote
	51	57.00	N	177	42.00	W	
	51	54.00	N	177	42.00	W	
	51	54.00	N	177	54.00	W	
	51	50.92	N	177	54.00	W	1
	51	48.00	N	177	46.44	W	
	51	48.00	N	177	42.00	W	
	51	42.59	N	177	42.00	W	1
	51	45.57	N	177	24.01	W	
	51	48.00	N	177	24.00	W	
	51	48.00	N	177	14.08	W	4
Tanaga/Kanaga South	51	43.78	N	177	24.04	W	1
	51	42.37	N	177	42.00	W	
	51	42.00	N	177	42.00	W	
	51	42.00	N	177	50.04	W	1
	51	40.91	N	177	54.00	W	
	51	36.00	N	177	54.00	W	
	51	36.00	N	178	0.00	W	
	51	38.62	N	178	0.00	W	1
	51	42.52	N	178	6.00	W	
	51	49.34	N	178	6.00	W	1
	51	51.35	N	178	12.00	W	
	51	48.00	N	178	12.00	W	
	51	48.00	N	178	30.00	W	
	51	42.00	N	178	30.00	W	
	51	42.00	N	178	36.00	W	
	51	36.26	N	178	36.00	W	1
	51	35.75	N	178	36.00	W	
	51	27.00	N	178	36.00	W	
	51	27.00	N	178	42.00	W	
	51	21.00	N	178	42.00	W	
	51	21.00	N	178	24.00	W	
	51	24.00	N	178	24.00	W	
	51	24.00	N	178	12.00	W	
	51	30.00	N	178	12.00	W	
	51	30.00	N	177	24.00	W	
Amchitka Pass East	51	42.00	N	178	48.00	W	
	51	42.00	N	179	18.00	W	

Name	Latitude			Longitude			Footnote
	51	45.00	N	179	18.00	W	
	51	45.00	N	179	36.00	W	
	51	42.00	N	179	36.00	W	
	51	42.00	N	179	39.00	W	
	51	30.00	N	179	39.00	W	
	51	30.00	N	179	36.00	W	
	51	18.00	N	179	36.00	W	
	51	18.00	N	179	24.00	W	
	51	30.00	N	179	24.00	W	
	51	30.00	N	179	0.00	W	
	51	25.82	N	179	0.00	W	
	51	25.85	N	178	59.00	W	
	51	24.00	N	178	58.97	W	
	51	24.00	N	178	54.00	W	
	51	30.00	N	178	54.00	W	
	51	30.00	N	178	48.00	W	
	51	32.69	N	178	48.00	W	1
	51	33.95	N	178	48.00	W	
Amatignak I.	51	18.00	N	178	54.00	W	
	51	18.00	N	179	5.30	W	1
	51	18.00	N	179	6.75	W	
	51	18.00	N	179	12.00	W	
	51	6.00	N	179	12.00	W	
	51	6.00	N	179	0.00	W	
	51	12.00	N	179	0.00	W	
	51	12.00	N	178	54.00	W	
Amchitka Pass Center	51	30.00	N	179	48.00	W	
	51	30.00	N	180	0.00	W	
	51	24.00	N	180	0.00	W	
	51	24.00	N	179	48.00	W	
Amchitka Pass West	51	36.00	N	179	54.00	E	
	51	36.00	N	179	36.00	E	
	51	30.00	N	179	36.00	E	
	51	30.00	N	179	45.00	E	
	51	27.00	N	179	48.00	E	
	51	24.00	N	179	48.00	E	

Name	Latitude			Longitude			Footnote
	51	24.00	N	179	54.00	E	
Petrel Bank	52	51.00	N	179	12.00	W	
	52	51.00	N	179	24.00	W	
	52	48.00	N	179	24.00	W	
	52	48.00	N	179	30.00	W	
	52	42.00	N	179	30.00	W	
	52	42.00	N	179	36.00	W	
	52	36.00	N	179	36.00	W	
	52	36.00	N	179	48.00	W	
	52	30.00	N	179	48.00	W	
	52	30.00	N	179	42.00	E	
	52	24.00	N	179	42.00	E	
	52	24.00	N	179	36.00	E	
	52	12.00	N	179	36.00	E	
	52	12.00	N	179	36.00	W	
	52	24.00	N	179	36.00	W	
	52	24.00	N	179	30.00	W	
	52	30.00	N	179	30.00	W	
	52	30.00	N	179	24.00	W	
	52	36.00	N	179	24.00	W	
	52	36.00	N	179	18.00	W	
	52	42.00	N	179	18.00	W	
	52	42.00	N	179	12.00	W	
Rat I./Amchitka I. South	51	21.00	N	179	36.00	E	
	51	21.00	N	179	18.00	E	
	51	18.00	N	179	18.00	E	
	51	18.00	N	179	12.00	E	
	51	23.77	N	179	12.00	E	1
	51	24.00	N	179	10.20	E	
	51	24.00	N	179	0.00	E	
	51	36.00	N	178	36.00	E	
	51	36.00	N	178	24.00	E	
	51	42.00	N	178	24.00	E	
	51	42.00	N	178	6.00	E	
	51	48.00	N	178	6.00	E	
	51	48.00	N	177	54.00	E	

Name	Latitude			Longitude			Footnote
	51	54.00	N	177	54.00	E	
	51	54.00	N	178	12.00	E	
	51	48.00	N	178	12.00	E	
	51	48.00	N	178	17.09	E	1
	51	48.00	N	178	20.60	E	
	51	48.00	N	178	24.00	E	
	52	6.00	N	178	24.00	E	
	52	6.00	N	178	12.00	E	
	52	0.00	N	178	12.00	E	
	52	0.00	N	178	11.01	E	1
	52	0.00	N	178	5.99	E	
	52	0.00	N	177	54.00	E	
	52	9.00	N	177	54.00	E	
	52	9.00	N	177	42.00	E	
	52	0.00	N	177	42.00	E	
	52	0.00	N	177	48.00	E	
	51	54.00	N	177	48.00	E	
	51	54.00	N	177	30.00	E	
	51	51.00	N	177	30.00	E	
	51	51.00	N	177	24.00	E	
	51	45.00	N	177	24.00	E	
	51	45.00	N	177	30.00	E	
	51	48.00	N	177	30.00	E	
	51	48.00	N	177	42.00	E	
	51	42.00	N	177	42.00	E	
	51	42.00	N	178	0.00	E	
	51	39.00	N	178	0.00	E	
	51	39.00	N	178	12.00	E	
	51	36.00	N	178	12.00	E	
	51	36.00	N	178	18.00	E	
	51	30.00	N	178	18.00	E	
	51	30.00	N	178	24.00	E	
	51	24.00	N	178	24.00	E	
	51	24.00	N	178	36.00	E	
	51	30.00	N	178	36.00	E	
	51	24.00	N	178	48.00	E	

Name	Latitude			Longitude			Footnote
	51	18.00	N	178	48.00	E	
	51	18.00	N	178	54.00	E	
	51	12.00	N	178	54.00	E	
	51	12.00	N	179	30.00	E	
	51	18.00	N	179	30.00	E	
	51	18.00	N	179	36.00	E	
Amchitka I. North	51	42.00	N	179	12.00	E	
	51	42.00	N	178	57.00	E	
	51	36.00	N	178	56.99	E	
	51	36.00	N	179	0.00	E	
	51	33.62	N	179	0.00	E	2
	51	30.00	N	179	5.00	E	
	51	30.00	N	179	18.00	E	
	51	36.00	N	179	18.00	E	
	51	36.00	N	179	12.00	E	
Pillar Rock	52	9.00	N	177	30.00	E	
	52	9.00	N	177	18.00	E	
	52	6.00	N	177	18.00	E	
	52	6.00	N	177	30.00	E	
Murray Canyon	51	48.00	N	177	12.00	E	
	51	48.00	N	176	48.00	E	
	51	36.00	N	176	48.00	E	
	51	36.00	N	177	0.00	E	
	51	39.00	N	177	0.00	E	
	51	39.00	N	177	6.00	E	
	51	42.00	N	177	6.00	E	
	51	42.00	N	177	12.00	E	
Buldir	52	6.00	N	177	12.00	E	
	52	6.00	N	177	0.00	E	
	52	12.00	N	177	0.00	E	
	52	12.00	N	176	54.00	E	
	52	9.00	N	176	54.00	E	
	52	9.00	N	176	48.00	E	
	52	0.00	N	176	48.00	E	
	52	0.00	N	176	36.00	E	
	52	6.00	N	176	36.00	E	
	52	6.00	N	176	24.00	E	

Name	Latitude			Longitude			Footnote
	52	12.00	N	176	24.00	E	
	52	12.00	N	176	12.00	E	
	52	18.00	N	176	12.00	E	
	52	18.00	N	176	30.00	E	
	52	24.00	N	176	30.00	E	
	52	24.00	N	176	0.00	E	
	52	18.00	N	176	0.00	E	
	52	18.00	N	175	54.00	E	
	52	6.00	N	175	54.00	E	
	52	6.00	N	175	48.00	E	
	52	0.00	N	175	48.00	E	
	52	0.00	N	175	54.00	E	
	51	54.00	N	175	54.00	E	
	51	54.00	N	175	36.00	E	
	51	42.00	N	175	36.00	E	
	51	42.00	N	175	30.00	E	
	51	36.00	N	175	30.00	E	
	51	36.00	N	175	36.00	E	
	51	30.00	N	175	36.00	E	
	51	30.00	N	175	42.00	E	
	51	36.00	N	175	42.00	E	
	51	36.00	N	176	0.00	E	
	52	0.00	N	176	0.00	E	
	52	0.00	N	176	6.00	E	
	52	6.00	N	176	6.00	E	
	52	6.00	N	176	12.00	E	
	52	0.00	N	176	12.00	E	
	52	0.00	N	176	30.00	E	
	51	54.00	N	176	30.00	E	
	51	54.00	N	177	0.00	E	
	52	0.00	N	177	0.00	E	
	52	0.00	N	177	12.00	E	
Buldir donut	51	48.00	N	175	48.00	E	5
	51	48.00	N	175	42.00	E	5
	51	45.00	N	175	42.00	E	5
	51	45.00	N	175	48.00	E	5,7

Name	Latitude			Longitude			Footnote
Buldir Mound	51	54.00	N	176	24.00	E	
	51	54.00	N	176	18.00	E	
	51	48.00	N	176	18.00	E	
	51	48.00	N	176	24.00	E	
Buldir West	52	30.00	N	175	48.00	E	
	52	30.00	N	175	36.00	E	
	52	36.00	N	175	36.00	E	
	52	36.00	N	175	24.00	E	
	52	24.00	N	175	24.00	E	
	52	24.00	N	175	30.00	E	
	52	18.00	N	175	30.00	E	
	52	18.00	N	175	36.00	E	
	52	24.00	N	175	36.00	E	
	52	24.00	N	175	48.00	E	
Tahoma Canyon	52	0.00	N	175	18.00	E	
	52	0.00	N	175	12.00	E	
	51	42.00	N	175	12.00	E	
	51	42.00	N	175	24.00	E	
	51	54.00	N	175	24.00	E	
	51	54.00	N	175	18.00	E	
Walls Plateau	52	24.00	N	175	24.00	E	
	52	24.00	N	175	12.00	E	
	52	18.00	N	175	12.00	E	
	52	18.00	N	175	0.00	E	
	52	12.00	N	175	0.00	E	
	52	12.00	N	174	42.00	E	
	52	6.00	N	174	42.00	E	
	52	6.00	N	174	36.00	E	
	52	0.00	N	174	36.00	E	
	52	0.00	N	174	42.00	E	
	51	54.00	N	174	42.00	E	
	51	54.00	N	174	48.00	E	
	52	0.00	N	174	48.00	E	
	52	0.00	N	174	54.00	E	
	52	6.00	N	174	54.00	E	
	52	6.00	N	175	18.00	E	
	52	12.00	N	175	24.00	E	

Name	Latitude			Longitude			Footnote
Semichi I.	52	30.00	N	175	6.00	E	
	52	30.00	N	175	0.00	E	
	52	36.00	N	175	0.00	E	
	52	36.00	N	174	48.00	E	
	52	42.00	N	174	48.00	E	
	52	42.00	N	174	33.00	E	
	52	36.00	N	174	33.00	E	
	52	36.00	N	174	24.00	E	
	52	39.00	N	174	24.00	E	
	52	39.00	N	174	0.00	E	
	52	42.00	N	173	54.00	E	
	52	45.16	N	173	54.00	E	1
	52	46.35	N	173	54.00	E	
	52	54.00	N	173	54.00	E	
	52	54.00	N	173	30.00	E	
	52	48.00	N	173	30.00	E	
	52	48.00	N	173	36.00	E	
	52	40.00	N	173	36.00	E	
	52	40.00	N	173	25.00	E	
	52	30.00	N	173	25.00	E	
	52	33.00	N	173	40.00	E	
	52	33.00	N	173	54.00	E	
	52	18.00	N	173	54.00	E	
	52	18.00	N	174	30.00	E	
	52	30.00	N	174	30.00	E	
	52	30.00	N	174	48.00	E	
	52	24.00	N	174	48.00	E	
	52	24.00	N	175	6.00	E	
Agattu South	52	18.00	N	173	54.00	E	
	52	18.00	N	173	24.00	E	
	52	9.00	N	173	24.00	E	
	52	9.00	N	173	36.00	E	
	52	6.00	N	173	36.00	E	
	52	6.00	N	173	54.00	E	
Attu I. North	53	3.00	N	173	24.00	E	
	53	3.00	N	173	6.00	E	
	53	0.00	N	173	6.00	E	

Name	Latitude			Longitude			Footnote
	53	0.00	N	173	24.00	E	
Attu I. West	52	54.00	N	172	12.00	E	
	52	54.00	N	172	0.00	E	
	52	48.00	N	172	0.00	E	
	52	48.00	N	172	12.00	E	
Stalemate Bank	53	0.00	N	171	6.00	E	
	53	0.00	N	170	42.00	E	
	52	54.00	N	170	42.00	E	
	52	54.00	N	171	6.00	E	

Note: Unless otherwise footnoted, each area is delineated by connecting in order the coordinates listed by straight lines. Except for the Amlia North/Seguam donut and the Buldir donut, each area delineated in the table is open to nonpelagic trawl gear fishing. The remainder of the entire Aleutian Islands subarea and the areas delineated by the coordinates for the Amlia North/Seguam and Buldir donuts are closed to nonpelagic trawl gear fishing, as specified at § 679.22. Unless otherwise noted, the last set of coordinates for each area is connected to the first set of coordinates for the area by a straight line. The projected coordinate system is North American Datum 1983, Albers.

[1]The connection of these coordinates to the next set of coordinates is by a line extending in a clockwise direction from these coordinates along the shoreline at mean lower-low water to the next set of coordinates.

[2]The connection of these coordinates to the next set of coordinates is by a line extending in a counter clockwise direction from these coordinates along the shoreline at mean lower-low water to the next set of coordinates.

[3]The connection of these coordinates to the first set of coordinates for this area is by a line extending in a clockwise direction from these coordinates along the shoreline at mean lower-low water to the first set of coordinates.

[4]The connection of these coordinates to the first set of coordinates for this area is by a line extending in a counter clockwise direction from these coordinates along the shoreline at mean lower-low water to the first set of coordinates.

[5] The area specified by this set of coordinates is closed to fishing with non-pelagic trawl gear.

[6] This set of coordinates is connected to the first set of coordinates listed for the area by a straight line.

[7]The last coordinate for the donut is connected to the first set of coordinates for the donut by a straight line.

[FR Doc. 07–5774 Filed 11–20–07; 8:45 am]
BILLING CODE 3510–22–C

Notices

Federal Register

Vol. 72, No. 224

Wednesday, November 21, 2007

This section of the FEDERAL REGISTER contains documents other than rules or proposed rules that are applicable to the public. Notices of hearings and investigations, committee meetings, agency decisions and rulings, delegations of authority, filing of petitions and applications and agency statements of organization and functions are examples of documents appearing in this section.

DEPARTMENT OF AGRICULTURE

Office of the Secretary

Notice of Appointment of Members to the National Agricultural Research, Extension, Education, and Economics Advisory Board

AGENCY: Research, Education, and Economics, USDA.

ACTION: Appointment of members.

SUMMARY: In accordance with the Federal Advisory Committee Act, 5 U.S.C. App 2, the United States Department of Agriculture announces the appointments made by the Secretary of Agriculture to the 10 vacancies on the National Agricultural Research, Extension, Education, and Economics Advisory Board.

DATES: Appointments by the Secretary of Agriculture are for a 3-year term, effective October 1, 2007, until September 30, 2010.

ADDRESSES: You may submit comments by any of the following methods: *E-mail: joseph.dunn@usda.gov;* Fax: 202–720–6199; *Mail/Hand Delivery/Courier:* National Agricultural Research, Extension, Education, and Economics Advisory Board; Research Extension, Education, and Economics Advisory Board Office, Room 344A, Jamie L. Whitten Building, U.S. Department of Agriculture; STOP 2255; 1400 Independence Avenue, SW., Washington, DC 20250–2255.

FOR FURTHER INFORMATION CONTACT: Joseph Dunn, Executive Director, National Agricultural Research, Extension, Education, and Economics Advisory Board, Telephone: 202–720–3684.

SUPPLEMENTARY INFORMATION: Section 802 of the Federal Agricultural Improvement and Reform Act of 1996 authorized the creation of the National Agricultural Research, Extension, Education, and Economics Advisory Board. The Board is composed of 31 members, each representing a specific category related to agriculture. The Board was first appointed in September 1996 and at the time one-third of the original members were appointed for one, two, and three-year terms, respectively. Due to the staggered appointments, the terms for 10 of the 31 members expired September 2007. Each member is appointed by the Secretary of Agriculture to a specific category on the Board, including farming or ranching, food production and processing, forestry research, crop and animal science, land-grant institutions, non-land grant college or university with a historic commitment to research in the food and agricultural sciences, food retailing and marketing, rural economic development, and natural resource and consumer interest groups, among many others. Appointees by vacancy category of the 6 new members and 4 re-appointments as follows: Category H. ''National Food-Animal Science Society,'' Nancy M. Cox, Director, Kentucky Agricultural Experimental Station, Associate Dean for Research, University of Kentucky College of Agriculture, Lexington, KY ; Category I. ''National Crop, Soil, Agronomy, Horticulture, or Weed Science Society,'' Martin A. Massengale, President Emeritus & Director, Center for Grassland Studies, University of Lincoln-Nebraska, Lincoln, NE; Category N. ''1890 Land-Grant College,'' Alton Thompson, Dean and Research Director, School of Agricultural and Environmental Science, North Carolina A&T State University, Greensboro, NC; Category O. ''1994 Land-Grant College,'' John E. Salois, President, Blackfeet Community College, Browning, MT; Category Q. ''American College of Veterinary Medicine,'' Thomas J. Rosol, Dean and Professor, The Ohio State University, Columbus, OH; Category U. ''Food Retailing and Marketing Representative,'' Calvin M. Dooley, President and CEO, Food Products Association, (Former Congressman for California), Washington, DC; Category W. ''Rural Economic Development Advocate,'' Walter J. Armbruster, President, Farm Foundation and Chair, Specialty Crop Committee, Oak Brook, IL; Category X. ''National Consumer Interest Group,'' Robin A. Douthitt, Dean, University of Wisconsin-Madison, Madison, WI; Category Y. ''National Forestry Group,'' Steven P. Quarles, Partner & Chair of Law Firm's, Crowell & Moring LLP, Environmental and Natural Resources, (Former Deputy Under Secretary, Department of Interior), Washington, DC; Category Z. ''National Conservation or Natural Resource Group,'' Edward C.A. Runge, Senior Adviser and Professor & Billie B. Turner, Chair (Emeritus), Texas A&M University, College Station, TX.

Done at Washington, DC this 8th day of November, 2007.

Gale Buchanan,

Under Secretary, Research, Education, and Economics.

[FR Doc. E7–22696 Filed 11–20–07; 8:45 am]

BILLING CODE 3410–22–P

DEPARTMENT OF AGRICULTURE

Agricultural Marketing Service

[Docket No. AMS–TB–07–135; TB–07–02]

Notice of Request for Extension and Revision of a Currently Approved Information Collection

AGENCY: Agricultural Marketing Service, USDA.

ACTION: Notice and request for comments.

SUMMARY: In accordance with the Paperwork Reduction Act of 1995 (44 U.S.C. Chapter 35), this notice announces the Agricultural Marketing Service's (AMS) intention to request approval, from the Office of Management and Budget, for an extension of and revision to the currently approved information collection for Tobacco Report.

DATES: Comments on this notice must be received by January 22, 2008 to be assured of consideration.

Additional Information or Comments: Contact Henry R. Martin, Acting Deputy Administrator, Tobacco Programs, Agricultural Marketing Service, U.S. Department of Agriculture, Stop 0280, 1400 Independence Ave., SW., Washington, DC 20250–0280; (202) 205–0489, Fax (202) 609–1718.

SUPPLEMENTARY INFORMATION:

Title: Tobacco Report.

OMB Number: 0581–0004.

Expiration Date of Approval: 04/30/2008.

Type of Request: Extension and revision of a currently approved information collection.

Abstract: The Tobacco Statistics Act of 1929 (7 U.S.C. 501–508) provides for the collection and publication of statistics of tobacco by USDA with regard to quantity of leaf tobacco in all forms in the United States and Puerto Rico, owned by or in the possession of dealers, manufacturers, and others with the exception of the original growers of the tobacco.

The statistics shall show the quantity of the tobacco in such detail as to types, as USDA shall deem to be practical and necessary and shall be summarized as of January 1, April 1, July 1, and October 1 of each year and are due within 15 days of the summarized dates.

The information furnished under the provisions of this Act shall be used only for statistical purposes for which it is supplied. No publication shall be made by USDA whereby the data furnished by any particular establishment can be identified, nor shall anyone other than the sworn employees of USDA be allowed to examine the individual reports.

The regulations governing the Tobacco Stocks and Standards Act (7 CFR part 30) issued under the Tobacco Statistics Act specifically address the reporting requirements. Tobacco in leaf form or stems is reported by types of tobacco and whether stemmed or unstemmed. Tobacco in sheet form shall be segregated as to whether for cigar wrapper, cigar binder, for cigarettes, or for other products.

Tobacco stocks reporting is mandatory. The basic purpose of the information collection is to ascertain the total supply of unmanufactured tobacco available to domestic manufacturers and to calculate the amount consumed in manufactured tobacco products. This data was also used for the calculation of production quotas for individual types of tobacco and for price support calculations until repealed in 2005.

The Quarterly Report of Manufacture and Sales of Snuff, Smoking and Chewing Tobacco is voluntary. Prior to 1965, information on the manufacture and sale of snuff, smoking and chewing tobacco products was available from Treasury Department publications on the collection of taxes. With repeal of the Federal tax in 1965, the industry requested that the collection of basic data be continued to maintain the statistical series and all major manufacturers agreed to furnish information. Federal taxes were reimposed in 1985 for snuff and chewing tobacco and the Treasury Department began reporting data on these products, but not in the detail desired by the industry. Data from this report was also used in calculations to determine the production quotas of types of tobacco used in these products until repealed in 2005.

The Agricultural Marketing Act of 1946 (7 U.S.C. 1621–1627) directs and authorizes USDA to collect, tabulate and disseminate statistics on marketing agricultural products including market supplies, storage stocks, quantity, quality, and condition of such products in various positions in the marketing channel, utilization of sub-products, shipments, and unloads.

Estimate of Burden: Public reporting burden for this collection of information is estimated to average 0.90 hours per response.

Respondents: Primarily tobacco dealers and manufacturers including small businesses or organizations.

Estimated Number of Respondents: 57.

Estimated Total Annual Responses: 228.

Estimated Number of Responses per Respondent: 4.

Estimated Total Annual Burden on Respondents: 204.

Comments are invited on: (1) Whether the proposed collection of information is necessary for the proper performance of the functions of the agency, including whether the information will have practical utility; (2) the accuracy of the agency's estimate of the burden of the proposed collection of information including the validity of the methodology and assumptions used; (3) ways to enhance the quality, utility, and clarity of the information to be collected; and (4) ways to minimize the burden of the collection of information on those who are to respond, including the use of appropriate automated, electronic, mechanical, or other technological collection techniques or other forms of information technology. Comments may be sent to Henry R. Martin, Acting Deputy Administrator, Tobacco Programs, AMS, USDA Stop 0280, 1400 Independence Ave., SW., Washington, DC 20250–0280. All comments received will be available for public inspection during regular business hours at the same address.

All responses to this notice will be summarized and included in the request for OMB approval. All comments will become a matter of public record.

Dated: November 15, 2007.

Lloyd C. Day,

Administrator, Agricultural Marketing Service.

[FR Doc. E7–22690 Filed 11–20–07; 8:45 am]

BILLING CODE 3410–02–P

DEPARTMENT OF AGRICULTURE

Animal and Plant Health Inspection Service

[Docket No. APHIS–2007–0131]

Notice of Request for Revision and Extension of Approval of an Information Collection; Scrapie in Sheep and Goats; Interstate Movement Restrictions and Indemnity Program

AGENCY: Animal and Plant Health Inspection Service, USDA.

ACTION: Revision and extension of approval of an information collection; comment request.

SUMMARY: In accordance with the Paperwork Reduction Act of 1995, this notice announces the Animal and Plant Health Inspection Service's intention to request a revision and extension of approval of an information collection associated with regulations for the interstate movement of sheep and goats and an indemnity program to help prevent the spread of scrapie.

DATES: We will consider all comments that we receive on or before January 22, 2008.

ADDRESSES: You may submit comments by either of the following methods:

Federal eRulemaking Portal: Go to *http://www.regulations.gov*, select ''Animal and Plant Health Inspection Service'' from the agency drop-down menu, then click ''Submit.'' In the Docket ID column, select APHIS–2007–0131 to submit or view public comments and to view supporting and related materials available electronically. Information on using Regulations.gov, including instructions for accessing documents, submitting comments, and viewing the docket after the close of the comment period, is available through the site's ''User Tips'' link.

Postal Mail/Commercial Delivery: Please send four copies of your comment (an original and three copies) to Docket No. APHIS–2007–0131, Regulatory Analysis and Development, PPD, APHIS, Station 3A–03.8, 4700 River Road Unit 118, Riverdale, MD 20737–1238. Please state that your comment refers to Docket No. APHIS–2007–0131.

Reading Room: You may read any comments that we receive on this docket in our reading room. The reading room is located in room 1141 of the USDA South Building, 14th Street and Independence Avenue, SW., Washington, DC. Normal reading room hours are 8 a.m. to 4:30 p.m., Monday through Friday, except holidays. To be

sure someone is there to help you, please call (202) 690–2817 before coming.

Other Information: Additional information about APHIS and its programs is available on the Internet at *http://www.aphis.usda.gov*.

FOR FURTHER INFORMATION CONTACT: For information regarding the domestic regulations to help prevent the spread of scrapie, contact Dr. Diane Sutton, Senior Staff Veterinarian, Ruminant Health Programs, NCAHP, VS, APHIS, 4700 River Road Unit 43, Riverdale, MD 20737; (301) 734–6188. For copies of more detailed information on the information collection, contact Mrs. Celeste Sickles, APHIS' Information Collection Coordinator, at (301) 734–7477.

SUPPLEMENTARY INFORMATION:

Title: Scrapie in Sheep and Goats; Interstate Movement Restrictions and Indemnity Program.

OMB Number: 0579–0101.

Type of Request: Revision and extension of approval of an information collection.

Abstract: The Animal and Plant Health Inspection Service (APHIS) of the U.S. Department of Agriculture regulates the importation and interstate movement of animals and animal products and conducts various other activities to protect the health of our Nation's livestock and poultry.

Scrapie is a degenerative and eventually fatal disease affecting the central nervous systems of sheep and goats. It is a member of a class of diseases called transmissible spongiform encephalopathies (TSEs). Its control is complicated because the disease has an extremely long incubation period without clinical signs of disease and because there is no test that can detect the disease early in the incubation period and no known treatment.

The regulations in 9 CFR part 79 restrict the interstate movement of certain sheep and goats to help prevent the spread of scrapie. APHIS also has regulations at 9 CFR part 54 for an indemnity program to compensate owners of sheep and goats destroyed because of scrapie.

The scrapie disease control program requires the use of a number of information collection activities, including APHIS forms for inspection and epidemiology data; applications from owners to participate in the Scrapie Flock Certification Program; flock plans; post-exposure management and monitoring plans; scrapie test records; applications for indemnity payments; certificates, permits, and owner statements for the interstate movement of certain sheep and goats; applications for premises identification numbers; and applications for official APHIS-approved eartags, backtags, or tattoos.

The information provided by these documents is critical to our ability to prevent the interstate spread of scrapie, and therefore plays a vital role in our disease control and eradication efforts.

We are asking the Office of Management and Budget (OMB) to approve our use of these information collection activities for 3 years.

The purpose of this notice is to solicit comments from the public (as well as affected agencies) concerning our information collection. These comments will help us:

(1) Evaluate whether the collection of information is necessary for the proper performance of the functions of the Agency, including whether the information will have practical utility;

(2) Evaluate the accuracy of our estimate of the burden of the information collection, including the validity of the methodology and assumptions used;

(3) Enhance the quality, utility, and clarity of the information to be collected; and

(4) Minimize the burden of the information collection on those who are to respond, through use, as appropriate, of automated, electronic, mechanical, and other collection technologies, e.g., permitting electronic submission of responses.

Estimate of burden: The public reporting burden for this collection of information is estimated to average 1.098674842 hours per response.

Respondents: Flock owners, dealers, market operators, accredited veterinarians, and State animal health authorities.

Estimated annual number of respondents : 132,059.

Estimated annual number of responses per respondent: 4.621169325.

Estimated annual number of responses: 610,267.

Estimated total annual burden on respondents: 670,485 hours. (Due to averaging, the total annual burden hours may not equal the product of the annual number of responses multiplied by the reporting burden per response.)

All responses to this notice will be summarized and included in the request for OMB approval. All comments will also become a matter of public record.

Done in Washington, DC, this 14th day of November 2007.

Kevin Shea,

Acting Administrator, Animal and Plant Health Inspection Service.

[FR Doc. E7–22742 Filed 11–20–07; 8:45 am]

BILLING CODE 3410–34–P

DEPARTMENT OF AGRICULTURE

Animal and Plant Health Inspection Service

[Docket No. APHIS–2007–0134]

Secretary's Advisory Committee on Foreign Animal and Poultry Diseases; Notice of Solicitation for Membership

AGENCY: Animal and Plant Health Inspection Service, USDA.

ACTION: Notice of solicitation for membership.

SUMMARY: We are giving notice that the Secretary has reestablished the Advisory Committee on Foreign Animal and Poultry Diseases for a 2-year period. The Secretary is soliciting nominations for membership for this committee.

DATES: Consideration will be given to nominations received on or before January 7, 2008.

ADDRESSES: Nominations should be addressed to the person listed under **FOR FURTHER INFORMATION CONTACT**.

FOR FURTHER INFORMATION CONTACT: Dr. Mark Teachman, Acting Director of Interagency Coordination, National Center for Animal Health Emergency Programs, VS, APHIS, USDA, 4700 River Road Unit 41, Riverdale, MD 20737–1231; (301) 734–8667.

SUPPLEMENTARY INFORMATION: The Secretary's Advisory Committee on Foreign Animal and Poultry Diseases (the Committee) advises the Secretary of Agriculture on actions necessary to keep foreign diseases of livestock and poultry from being introduced into the United States. In addition, the Committee advises the Secretary on contingency planning and on maintaining a state of preparedness to deal with these diseases, if introduced.

The Committee Chairperson and Vice Chairperson shall be elected by the Committee from among its members.

In August 2007, we reestablished the Committee. We are now soliciting nominations from interested organizations and individuals. An organization may nominate individuals from within or outside its membership. The Secretary will select members to obtain the broadest possible representation on the Committee, in accordance with the Federal Advisory

Committee Act (5 U.S.C. App.) and U.S. Department of Agriculture (USDA) regulation 1041–1. Equal opportunity practices, in line with the USDA policies, will be followed in all appointments to the Committee. To ensure that the recommendations of the Committee have taken into account the needs of the diverse groups served by the Department, membership should include, to the extent practicable, individuals with demonstrated ability to represent minorities, women, and persons with disabilities.

Done in Washington, DC, this 14th day of November 2007.

Kevin Shea,

Acting Administrator, Animal and Plant Health Inspection Service.

[FR Doc. E7–22739 Filed 11–20–07; 8:45 am]

BILLING CODE 3410–34–P

DEPARTMENT OF AGRICULTURE

Animal and Plant Health Inspection Service

[Docket No. APHIS–2007–0143]

Notice of Availability of a Pest Risk Analysis for the Importation of Dropwort Leaves With Stems From South Korea Into the Continental United States

AGENCY: Animal and Plant Health Inspection Service, USDA.

ACTION: Notice.

SUMMARY: We are advising the public that we have prepared a pest risk analysis that evaluates the risks associated with the importation of dropwort leaves with stems from South Korea into the continental United States. Based on that analysis, we believe that the application of one or more designated phytosanitary measures will be sufficient to mitigate the risks of introducing or disseminating plant pests or noxious weeds via the importation of dropwort leaves with stems from South Korea. We are making the pest risk analysis available for review and comment.

DATES: We will consider all comments we receive on or before January 22, 2008.

ADDRESSES: You may submit comments by either of the following methods:

- *Federal eRulemaking Portal:* Go to *http://www.regulations.gov,* select ''Animal and Plant Health Inspection Service'' from the agency drop-down menu, then click ''Submit.'' In the Docket ID column, select Docket No. APHIS–2007–0143 to submit or view public comments and to view supporting and related materials available electronically. Information on using Regulations.gov, including instructions for accessing documents, submitting comments, and viewing the docket after the close of the comment period, is available through the site's ''User Tips'' link.
- *Postal Mail/Commercial Delivery:* Please send four copies of your comment (an original and three copies) to Docket No. APHIS–2007–0143, Regulatory Analysis and Development, PPD, APHIS, Station 3C71, 4700 River Road Unit 118, Riverdale, MD 20737–1238. Please state that your comment refers to Docket No. APHIS–2007–0143.

Reading Room: You may read any comments that we receive on this docket in our reading room. The reading room is located in room 1141 of the USDA South Building, 14th Street and Independence Avenue SW., Washington, DC. Normal reading room hours are 8 a.m. to 4:30 p.m., Monday through Friday, except holidays. To be sure someone is there to help you, please call (202) 690–2817 before coming.

Other Information: Additional information about APHIS and its programs is available on the Internet at *http://www.aphis.usda.gov.*

FOR FURTHER INFORMATION CONTACT: Mr. Alex Belano, Import Specialist, Commodity Import Analysis and Operations, Plant Health Programs, PPQ, APHIS, 4700 River Road Unit 133, Riverdale, MD 20737–1231; (301) 734–8758.

SUPPLEMENTARY INFORMATION: Under the regulations in ''Subpart-Fruits and Vegetables'' (7 CFR 319.56 through 319.56–47, referred to below as the regulations), the Animal and Plant Health Inspection Service (APHIS) of the U.S. Department of Agriculture prohibits or restricts the importation of fruits and vegetables into the United States from certain parts of the world to prevent plant pests from being introduced into and spread within the United States.

Section 319.56–4 of the regulations contains a performance-based process for approving the importation of commodities that, based on the findings of a pest risk analysis, can be safely imported subject to one or more of the designated phytosanitary measures listed in paragraph (b) of that section. These measures are:

- The fruits or vegetables are subject to inspection upon arrival in the United States and comply with all applicable provisions of § 319.56–3;
- The fruits or vegetables are imported from a pest-free area in the country of origin that meets the requirements of § 319.56–5 for freedom from that pest and are accompanied by a phytosanitary certificate stating that the fruits or vegetables originated in a pest-free area in the country of origin;
- The fruits or vegetables are treated in accordance with 7 CFR part 305;
- The fruits or vegetables are inspected in the country of origin by an inspector or an official of the national plant protection organization of the exporting country, and have been found free of one or more specific quarantine pests identified by the risk analysis as likely to follow the import pathway; and/or
- The fruits or vegetables are a commercial consignment.

APHIS received a request from the Government of South Korea to allow the importation of dropwort leaves with stems from South Korea into the continental United States. We have completed a pest risk assessment to identify pests of quarantine significance that could follow the pathway of importation into the United States and, based on that pest risk assessment, have prepared a risk management analysis to identify phytosanitary measures that could be applied to the commodities to mitigate the pest risk. We have concluded that dropwort leaves with stems can be safely imported into the continental United States from South Korea using one or more of the five designated phytosanitary measures listed in § 319.56–4(b). Therefore, in accordance with § 319.56–4(c), we are announcing the availability of our pest risk analysis for public review and comment. The pest risk analysis may be viewed on the Regulations.gov Web site or in our reading room (see **ADDRESSES** above for instructions for accessing Regulations.gov and information on the location and hours of the reading room). You may request paper copies of the pest risk analysis by calling or writing to the person listed under **FOR FURTHER INFORMATION CONTACT**. Please refer to the subject of the pest risk analysis when requesting copies.

After reviewing the comments we receive, we will announce our decision regarding the import status of dropwort leaves with stems from South Korea in a subsequent notice. If the overall conclusions of the analysis and the Administrator's determination of risk remain unchanged following our consideration of the comments, then we will begin issuing permits for importation of dropwort leaves with stems from South Korea into the continental United States subject to the requirements specified in the risk management analysis.

Authority: 7 U.S.C. 450, 7701–7772, and 7781–7786; 21 U.S.C. 136 and 136a; 7 CFR 2.22, 2.80, and 371.3.

Done in Washington, DC, this 14th day of November 2007.

Kevin Shea,

Acting Administrator, Animal and Plant Health Inspection Service.

[FR Doc. E7–22760 Filed 11–20–07; 8:45 am]

BILLING CODE 3410–34–P

DEPARTMENT OF AGRICULTURE

Forest Service

Umatilla National Forest, Grant County, Oregon; Farley Analysis Area Vegetation Management Project

AGENCY: Forest Service, USDA.

ACTION: Notice of intent to prepare an environment impact statement.

SUMMARY: The U.S. Department Agriculture—Forest Service proposes to conduct vegetation management activities on approximately 167,500 acres of upland forest sites in the Farley Analysis Area to restore sustainable forest conditions in the Desolation Creek watershed. The proposed action will use a range of mechanical harvest and non-harvest thinning and prescribed fire activities to alter species composition, stand structure, and fire regime condition class to re-create conditions that are consistent with the historic range of variably for forests of the Blue Mountains of northeastern Oregon, and to capture the commercial value of forest raw materials for the benefit of local economies.

The Farley Analysis Area encompasses the Desolation Creek watershed which covers 69,672 acres of diverse mountainous, mostly forested landscapes ranging in elevation from 7,765 ft at its headwaters to 2810 ft at its confluence with the North Fork John Day River near Dale, Oregon. It includes both National Forest and privately-owned lands; private lands comprise about 18 percent of the total area, mostly at lower elevations at the western end of the watershed.

Development and implementation of these actions will be conducted in accordance with the National Forest Management Act, National Environmental Policy Act, Council on Environmental Quality regulations, Clean Water Act, Clean Air Act, Endangered Species Act, and with the Umatilla National Forest Land and Resource Management Plan and scientific recommendations of the Interior Columbia Basin Ecosystem Management Project.

DATES: Comments concerning the scope of the analysis must be received by November 21, 2007. The Draft EIS is expected to be filed with the Environmental Protection Agency (EPA) and be available to the public for review by February 2008. The Final EIS is scheduled to be completed by April 2008.

ADDRESSES: Send written comments to the Responsible Official, Kevin D. Martin, Forest Supervisor, Umatilla National Forest, 2517 S.W. Hailey Avenue, Pendleton, OR 97801. Send electronic comments to: *comments-pacificnorthwest-umatilla@fs.fed.us.*

FOR FURTHER INFORMATION CONTACT: Michael A. Beckwith, Technical Writer-Editor, North Fork John Day Ranger District, 401 Main Street, Ukiah, OR 97880, phone (541) 427–5335. E-mail: *mabeckwith@fs.fed.us.*

SUPPLEMENTARY INFORMATION: Purpose and Need. Since the early 1900s, fire has been aggressively excluded from forest ecosystems throughout the Nation. From the mid to late 1900s, timber harvest practices in the interior Columbia Basin have emphasized removal primarily of mature ponderosa pine. The result has been a shift in forest conditions toward dense stands of Douglas and grand fir containing large amounts of dead and decaying wood that now are subject to insect infestations, disease, and very large wildfires, in contrast to the more open stands of fire-adapted species (such as ponderosa pine) that would be expected to occur historically.

In addition, in 1996 the Bull, Summit and Tower wildfires in and near the Farley Analysis Area involved mature lodgepole pine forests that had experienced substantial insect mortality. These fires were uncharacteristically intense and covered large area (over 130,000 acres) because, as a result of past fire suppression and timber harvest practices, the forests had become more dense (more trees per acre) and contained a larger amount of dead wood than would have existed historically. These fires resulted in greater loss of old forest structure, wildlife cover and habitat, riparian structure and vegetation, erosion and detrimental effects to soils over very large areas than would have been anticipated historically.

The Desolation Watershed Analysis (1999) found that almost 60 percent of upland-forest sites in the Farley area exhibit moderate or high departures from the characteristic species composition, structure and stand density conditions than would have existed historically. These conditions are outside the range of historic variability for forests in the Blue Mountains and are not sustainable over the long-term, with the end result likely to be very large, destructive wildfires. Therefore, the purpose and need for the Farley Vegetation Management Project is to improve the long-term sustainability of upland forests by reducing stand densities and fuel loads, restoring appropriate species composition, altering forest structure and fire regime condition class, regenerating mature lodgepole stands that currently exits, and to capture the commercial value of raw wood materials for the benefits of local economies.

Proposed Action. The Forest Service proposes to conduct mechanical harvest and non-harvest thinning, prescribed fire, fuels treatment, and reforestation activities on approximately 17,460 acres in the Farley Analysis Area in accordance with the resource management objectives and standards set forth in the Umatilla National Forest Land and Resource Management Plan (1990) and the scientific recommendations of the Interior Columbia Basin Ecosystem Management Project (1996). These activities are anticipated to yield approximately 60,000 hundred cubic feet of merchantable material. Approximately 100 miles of open and seasonally open roads will be required for the proposed action, including construction of approximately 40 miles of new system and temporary roads, and approximately 50 miles of reconstruction and maintenance of existing forest system roads. Approximately 2 miles of existing road will be closed and/or decommissioned at the conclusion of the proposed activities.

The proposed action requires amendments to the Forest Plan with respect to connectivity among stands exhibiting old forest structure, scenic values, and total area (at the specific stand, subwatershed and watershed level) allowed to be in the less than 20 year old age class. Implementation of the proposed actions could begin in late 2008.

Possible Alternatives. Alternatives will include the proposed action, no action, and additional alternatives that respond to issues generated during the scoping process. The agency will give notice of the full environmental analysis and decision-making process so interested and affected people may participate and contribute to the final decision.

Scoping. Correspondence with tribes, government agencies, organizations, and individuals who have indicated interest

will be conducted and input will be solicited.

Preliminary Issues. Preliminary issues identified include the potential effects of the proposed action on long-term forest conditions and sustainability, fish and wildlife habitat, hydrology and water quality, soils and scenic values.

Comment. Public comments on this proposed action are requested to identify issues and alternatives to the proposed action and to focus the scope of the analysis. Comments received in response to this solicitation, including names and address of those who comment, will be considered part of the public record on this proposed action, and will be available for public inspection. Comments submitted anonymously will be accepted and considered; however, those who submit anonymous comments will not have standing to appeal the subsequent decisions under 36 CFR parts 215 or 217. Additionally, pursuant to 7 CFR 1.27(d), any person may request the agency to withhold a submission from the public record by showing how the Freedom of Information Act (FOIA) permits such confidentiality. Persons requesting such confidentiality should be aware that under the FOIA, confidentiality may be granted in only very limited circumstances such as to protect trade secrets. The Forest Service will inform the requester of the agency's decision regarding the request for confidentiality, and where the request is denied; the agency will return the submission and notify the requester that the comments may be resubmitted with or without name and address within a specified number of days.

Early Notice of Importance of Public Participation in Subsequent Environmental Review. A draft EIS will be filed with the Environmental Protection Agency (EPA) and made available for public review by January 2008. The EPA will publish a Notice of Availability (NOA) of the draft EIS in the **Federal Register**. the final EIS is scheduled to be available April 2008.

The Forest Service believes at this early stage, it is important to give reviewers notice of several court rulings related to public participation in the environmental review process. First, reviewers of draft impact statements must structure their participation in the environmental review of the proposal so that it is meaningful and alerts the agency to the reviewer's position and contentions. *Vermont Yankee Nuclear Power Corp.* v. *NRDC, 435 U.S. 519, 553 (1978).* Also, environmental objections that could be raised at the draft environmental impact stage but that are not raised until after completion of the final environmental impact statement may be waived or dismissed by the courts. *City of Angoon* v. *Hodel*, 803 f. 2d 1016, 1022 (9th Cir. 1986) and *Wisconsin Heritages, Inc,* v. *Harris*, 490 F. Supp. 1334, 1338 (E.D. Wis. 1980). Because of these court rulings, it is very important that those interested in this proposed action participate by the close of the 45-day comment period so that substantive comments and objections are made available to the Forest Service at a time when it can meaningfully consider them and respond to them in the final environmental impact statement.

To assist the Forest Service in identifying and considering issues and concerns on the proposed action, comments on the draft environmental impact statement should be as specific as possible. It is also helpful if comments refer to specific pages or chapters of the draft statement. Comments may also address the adequacy of the draft environmental impact statement or the merits of the alternatives formulated and discussed in the statement. Reviewers may wish to refer to the Council on Environmental Quality Regulations for implementing the procedural provisions of the National Environmental Policy Act at 40 CFR 1503.3 in addressing these points.

In the final EIS, the Forest Service is required to respond to substantive comments received during the comment period for the draft EIS. The Forest Service is the lead agency and the responsible official is Craig Dixon, District Ranger, North Fork John Day Ranger District, Umatilla National Forest. The responsible official will decide where, and whether or not to salvage timber, and remove potential hazard trees. The responsible official will select the treatment alternative(s) for the Farley Vegetation Management, as well as potential mitigation and monitoring measures that may be needed. The decision will be documented in a record of decision. The decision will be subject to Forest Service Appeal Regulations (36 CFR part 215).

Dated: November 2, 2007.

Kevin Martin,

Forest Supervisor.

[FR Doc. 07–5773 Filed 11–20–07; 8:45 am]

BILLING CODE 3410–11–M

DEPARTMENT OF COMMERCE

Submission for OMB Review; Comment Request

The Department of Commerce will submit to the Office of Management and Budget (OMB) for clearance the following proposal for collection of information under the provisions of the Paperwork Reduction Act (44 U.S.C. Chapter 35).

AGENCY: National Oceanic and Atmospheric Administration (NOAA).

Title: NOAA Fisheries Northeast Region Gear Identification Requirements.

OMB Approval Number: 0648–0351.

Form Number(s): None.

Type of Request: Regular submission.

Burden Hours: 24,429.

Number of Respondents: 200

Average Hours per Response: 1 minute.

Needs and Uses: Regulations at 50 CFR 648.84(a),(b), and (d), § 648.123(b)(3), § 648.144(b)(1), § 648.264(a)(5), and § 697.21(a) and (b) require that Federal fishing permit holders using specified fishing gear mark that gear with specified information for the purposes of identification (e.g., official vessel number, permit number, or other methods identified in the regulations). The regulations also specify how the gear is to be marked for the purposes of visibility (e.g., buoys, radar reflectors, or other methods identified in the regulations). The display of the identifying characters on fishing gear aids in fishery law enforcement. The marking of gear for visibility increases safety at sea.

Affected Public: Business or other for-profit organizations.

Frequency: Every three years.

Respondent's Obligation: Mandatory.

OMB Desk Officer: David Rostker, (202) 395–3897.

Copies of the above information collection proposal can be obtained by calling or writing Diana Hynek, Departmental Paperwork Clearance Officer, (202) 482–0266, Department of Commerce, Room 6625, 14th and Constitution Avenue, NW., Washington, DC 20230 (or via the Internet at *dHynek@doc.gov*).

Written comments and recommendations for the proposed information collection should be sent within 30 days of publication of this notice to David Rostker, OMB Desk Officer, FAX number (202) 395–7285, or *David_Rostker@omb.eop.gov*.

Dated: November 16, 2007.

Gwellnar Banks,

Management Analyst, Office of the Chief Information Officer.

[FR Doc. E7–22767 Filed 11–20–07; 8:45 am]

BILLING CODE 3510–22–P

DEPARTMENT OF COMMERCE

Foreign-Trade Zones Board

[Order No. 1530]

Reorganization and Expansion of Foreign-Trade Zone 138; Columbus, OH, Area

Pursuant to its authority under the Foreign-Trade Zones Act of June 18, 1934, as amended (19 U.S.C. 81a–81u), the Foreign-Trade Zones Board (the Board) adopts the following Order:

Whereas, the Columbus Regional Airport Authority, grantee of Foreign-Trade Zone 138, submitted an application to the Board for authority to modify and restore acreage to Site 1A; to expand Site 1E and incorporate Temporary Site 6 on a permanent basis; to reorganize Areas 3 & 4 and remove Area 6 within Site 1G; to expand Site 4 to restore acreage and incorporate Temporary Site 4A on a permanent basis; to expand Site 7 to restore acreage and incorporate Temporary Site 8 on a permanent basis; to make Temporary Site 1 permanent as Site 12; to make Temporary Site 2 permanent as Site 13; to make Temporary Site 5 permanent as Site 14 and expand to include additional acreage; and, to make Temporary Site 7 permanent as Site 15 and expand to include additional acreage, within and adjacent to the Columbus Customs and Border Protection port of entry (FTZ Docket 5–2007; filed 2/6/07);

Whereas, notice inviting public comment was given in the **Federal Register** (72 FR 7403, 2/15/07) and the application has been processed pursuant to the FTZ Act and the Board's regulations; and,

Whereas, the Board adopts the findings and recommendations of the examiner's report, and finds that the requirements of the FTZ Act and Board's regulations are satisfied, and that the proposal is in the public interest; Now, therefore, the Board hereby orders:

The application to reorganize and expand FTZ 138 is approved, subject to the FTZ Act and the Board's regulations, including Section 400.28, and further subject to the Board's standard 2,000-acre activation limit for the overall zone project, and further subject to sunset provisions that would terminate authority on December 31, 2008, for Sites 1G and 7, and would terminate authority on December 31, 2011, for Site 15, where no activity has occurred under FTZ procedures before those dates.

Signed at Washington, DC, this 2nd day of November 2007.

David M. Spooner,

Assistant Secretary of Commerce for Import Administration, Alternate Chairman, Foreign-Trade Zones Board.

Attest:

Andrew McGilvray,

Executive Secretary.

[FR Doc. E7–22762 Filed 11–20–07; 8:45 am]

BILLING CODE 3510–DS–P

DEPARTMENT OF COMMERCE

Foreign-Trade Zones Board

[Order No. 1532]

Reissuance of the Grant of Authority for Subzone 50B National Steel and Shipbuilding Company, San Diego, CA (Docket 1–2007)

Pursuant to its authority under the Foreign-Trade Zones Act of June 18, 1934, as amended (19 U.S.C. 81a–81u), the Foreign-Trade Zones Board (the Board) adopts the following Order:

After consideration of the request with supporting documents (filed 1/9/2007) from the Board of Harbor Commissioners of the City of Long Beach, California, grantee of FTZ 50, for the reissuance of the subzone grant of authority for the National Steel and Shipbuilding Company facilities in San Diego, California to the City of San Diego, California, grantee of Foreign-Trade Zone 153, which has joined in the request, the Board, finding that the requirements of the Foreign-Trade Zones Act, as amended, and the Board's regulations are satisfied, and that the proposal is in the public interest, approves the request and recognizes the City of San Diego as the new grantee of the National Steel and Shipbuilding Company Subzone, which is hereby redesignated as Subzone 153E.

The approval is subject to the FTZ Act and the FTZ Board's regulations, including Section 400.28.

Signed at Washington, DC this 2nd day of November 2007.

David M. Spooner,

Assistant Secretary of Commerce for Import Administration, Alternate Chairman, Foreign-Trade Zones Board.

Attest:

Andrew McGilvray

Executive Secretary.

[FR Doc. E7–22758 Filed 11–20–07; 8:45 am]

BILLING CODE 3510–DS–P

DEPARTMENT OF COMMERCE

International Trade Administration

[A–570–898]

Chlorinated Isocyanurates from the People's Republic of China: Notice of Extension of Time Limit for the Final Results of the Antidumping Duty Administrative Review

AGENCY: Import Administration, International Trade Administration, Department of Commerce

EFFECTIVE DATE: November 21, 2007.

FOR FURTHER INFORMATION CONTACT: Katharine Huang or Charles Riggle, AD/CVD Operations, Office 8, Import Administration, International Trade Administration, U.S. Department of Commerce, 14th Street and Constitution Avenue, NW, Washington, DC 20230; telephone (202) 482–1271 or (202) 482–0650, respectively.

SUPPLEMENTARY INFORMATION:

Background

On July 27, 2006, the Department of Commerce (''the Department'') published the initiation of the administrative review of the antidumping duty order on chlorinated isocyanurates from the People's Republic of China (''PRC''). *See Initiation of Antidumping and Countervailing Duty Administrative Reviews and Request for Revocation in Part*, 71 FR 42626 (July 27, 2006). On July 17, 2007, the Department published the preliminary results. *See Chlorinated Isosyanurates from the People's Republic of China: Preliminary Results of Antidumping Duty Administrative Review*, 72 FR 39053 (July 17, 2007). This review covers the period December 16, 2004, through May 31, 2006. The final results are currently due by November 14, 2007.

Extension of Time Limit for Final Results of Review

Pursuant to section 751(a)(3)(A) of the Tariff Act of 1930, as amended (''the Act''), the Department shall make a final determination in an administrative review of an antidumping duty order within 120 days after the date on which the preliminary results are published. The Act further provides, however, that the Department may extend that 120-day period to 180 days after the preliminary results if it determines it is not practicable to complete the review within the foregoing time period.

The Department finds that it is not practicable to complete the final results of the administrative review of chlorinated isocyanurates from the PRC within the 120-day period due to complex issues the parties have raised regarding surrogate values for several raw materials, the selection of surrogate financial statements and by–products offsets. In accordance with section 751(a)(3)(A) of the Act, the Department is extending the time period for completion of the final results of this review by 30 days to 150 days after the date on which the preliminary results were published. Therefore, the final results are now due no later than December 14, 2007.

This notice is published in accordance with sections 751(a)(3)(A) and 777(i) of the Act.

Dated: November 14, 2007.

Stephen J. Claeys,

Deputy Assistant Secretary for Import Administration.

[FR Doc. E7–22763 Filed 11–20–07; 8:45 am]

BILLING CODE 3510–DS–S

DEPARTMENT OF COMMERCE

International Trade Administration

[A–570–914]

Notice of Postponement of Preliminary Determination of Antidumping Duty Investigation: Light-Walled Rectangular Pipe and Tube From the People's Republic of China

AGENCY: Import Administration, International Trade Administration, Department of Commerce.

DATES: *Effective Date:* November 21, 2007.

FOR FURTHER INFORMATION CONTACT: Jeff Pedersen or Drew Jackson, AD/CVD Operations, Office 4, Import Administration, International Trade Administration, U.S. Department of Commerce, 14th Street and Constitution Avenue, NW., Washington, DC 20230; *telephone:* (202) 482–2769 or (202) 482–4406, respectively.

SUPPLEMENTARY INFORMATION:

Postponement of Preliminary Determination

On July 17, 2007, the Department of Commerce (Department) initiated the antidumping duty investigation of light-walled rectangular pipe and tube from the People's Republic of China. *See Initiation of Antidumping Duty Investigations: Light-Walled Rectangular Pipe and Tube from Republic of Korea, Mexico, Turkey, and the People's Republic of China,* 72 FR 40274 (July 24, 2007) (*Initiation Notice*). The notice of initiation stated that, unless postponed, the Department would make its preliminary determination for this antidumping duty investigation no later than 140 days after the date of issuance of the initiation notice. *See Initiation Notice,* 72 FR at 40279.

Under section 733(c)(1)(B) of the Tariff Act of 1930, as amended (the Act), the Department can extend the period for reaching a preliminary determination until not later than 190 days after the date on which the administrative authority initiates an investigation if the Department concludes that the parties concerned are cooperating and determines that: (i) The case is extraordinarily complicated by reason of (I) the number and complexity of the transactions to be investigated or adjustments to be considered, (II) the novelty of the issues presented, or (III) the number of firms whose activities must be investigated, and (ii) additional time is necessary to make the preliminary determination.

We have determined that this investigation is extraordinarily complicated within the meaning of section 733(c)(1)(B)(i) of the Act. Specifically, on November 1, 2007, the petitioners in this investigation, Allied Tube and Conduit, Atlas Tube, California Steel and Tube, EXLTUBE, Hannibal Industries, Leavitt Tube Company, Maruichi American Corporation, Searing Industries, Southland Tube, Vest Inc., Welded Tube, and Western Tube and Conduit, filed a targeted dumping allegation regarding the mandatory respondents in this investigation, Zhangjiagang Zhongyuan Pipe-Making Co., Ltd., and Kunshan Lets Win Steel Machinery Co., Ltd. This allegation will involve substantial analysis and deliberations. Further, the Department requires additional time to gather more information from all the mandatory respondents in order to identify surrogate values for all factors of production and to gather all information needed to evaluate the separate-rate applications. Finally, the Department has not yet received all responses to its initial supplemental questionnaires, and thus requires more time to analyze the responses and issue any additional supplemental questionnaires, as needed.

Therefore, for the reasons identified above, we are postponing the preliminary determination under section 733(c)(1)(B) of the Act by fifty days from December 4, 2007 to January 23, 2008.

This notice is issued and published pursuant to sections 733(c)(2) of the Act and 19 CFR 351.205(f)(1).

Dated: November 14, 2007.

David M. Spooner,

Assistant Secretary for Import Administration.

[FR Doc. E7–22753 Filed 11–20–07; 8:45 am]

BILLING CODE 3510–DS–P

DEPARTMENT OF COMMERCE

National Oceanic and Atmospheric Administration

Proposed Information Collection; Comment Request; Pacific Islands Region Permit Family of Forms

AGENCY: National Oceanic and Atmospheric Administration (NOAA).

ACTION: Notice.

SUMMARY: The Department of Commerce, as part of its continuing effort to reduce paperwork and respondent burden, invites the general public and other Federal agencies to take this opportunity to comment on proposed and/or continuing information collections, as required by the Paperwork Reduction Act of 1995.

DATES: Written comments must be submitted on or before January 22, 2008.

ADDRESSES: Direct all written comments to Diana Hynek, Departmental Paperwork Clearance Officer, Department of Commerce, Room 6625, 14th and Constitution Avenue, NW., Washington, DC 20230 (or via the Internet at *dHynek@doc.gov*).

FOR FURTHER INFORMATION CONTACT: Requests for additional information or copies of the information collection instrument and instructions should be directed to Walter Ikehara, (808) 944–2275 or *walter.ikehara@noaa.gov.*

SUPPLEMENTARY INFORMATION:

I. Abstract

The National Marine Fisheries Service (NMFS) Pacific Islands Region (PIR) manages the U.S. fisheries of the Exclusive Economic Zone (EEZ) in the western Pacific under five fishery management plans (FMP), prepared by the Western Pacific Fishery Management Council pursuant to the Magnuson-Stevens Fishery Conservation and Management Act. The regulations implementing the FMP are found at 50 CFR part 665.

The permitting requirements at 50 CFR part 665 form the basis for this collection of information. PIR requests information from participants in the fisheries and interested persons. This information is needed for permit issuance, to identify participants in the fisheries, and to help measure impacts of management controls on the

participants in the fisheries of the EEZ in the western Pacific.

II. Method of Collection

Paper submissions and telephone calls are required from participants. Methods of submittal include mailing and facsimile transmission of paper forms.

III. Data

OMB Number: 0648–0490.
Form Number: None.
Type of Review: Regular submission.
Affected Public: Business or other for-profit organizations; individuals or households.
Estimated Number of Respondents: 232.
Estimated Time per Response: Main Hawaiian Islands longline prohibited area exemptions, 2 hours; NWHI bottomfish limited entry permit renewals, 1 hour; all other permit applications, 30 minutes; permit appeals, 2 hours.
Estimated Total Annual Burden Hours: 157.
Estimated Total Annual Cost to Public: $9,762.

IV. Request for Comments

Comments are invited on: (a) Whether the proposed collection of information is necessary for the proper performance of the functions of the agency, including whether the information shall have practical utility; (b) the accuracy of the agency's estimate of the burden (including hours and cost) of the proposed collection of information; (c) ways to enhance the quality, utility, and clarity of the information to be collected; and (d) ways to minimize the burden of the collection of information on respondents, including through the use of automated collection techniques or other forms of information technology.

Comments submitted in response to this notice will be summarized and/or included in the request for OMB approval of this information collection; they also will become a matter of public record.

Dated: November 16, 2007.

Gwellnar Banks,

Management Analyst, Office of the Chief Information Officer.

[FR Doc. E7–22769 Filed 11–20–07; 8:45 am]

BILLING CODE 3510–22–P

DEPARTMENT OF COMMERCE

Submission for OMB Review; Comment Request

The Department of Commerce will submit to the Office of Management and Budget (OMB) for clearance the following proposal for collection of information under the provisions of the Paperwork Reduction Act (44 U.S.C. Chapter 35).

Agency: National Oceanic and Atmospheric Administration (NOAA).

Title: Reporting Requirements for the Ocean Salmon Fishery Off the Coasts of Washington, Oregon, and California.

OMB Approval Number: 0648–0433.

Form Number(s): None.

Type of Request: Regular submission.

Burden Hours: 10.

Number of Respondents: 40.

Average Hours per Response: 15 minutes.

Needs and Uses: Timely and accurate accounting of salmon catch data for a regulatory area subject to quota management is necessary for quota assessment. The requirements to land salmon within specific time frames and in specific areas may be implemented to aid in the catch monitoring process. If unsafe weather conditions or mechanical problems prevent compliance with landing requirements, salmon fishermen are exempt, provided the appropriate notification is made as specified annually in the preseason regulations.

Affected Public: Business or other for-profit organizations.

Frequency: On occasion.

Respondent's Obligation: Mandatory.

OMB Desk Officer: David Rostker, (202) 395–3897.

Copies of the above information collection proposal can be obtained by calling or writing Diana Hynek, Departmental Paperwork Clearance Officer, (202) 482–0266, Department of Commerce, Room 6625, 14th and Constitution Avenue, NW., Washington, DC 20230 (or via the Internet at *dHynek@doc.gov*).

Written comments and recommendations for the proposed information collection should be sent within 30 days of publication of this notice to David Rostker, OMB Desk Officer, FAX number (202) 395–7285, or *David_Rostker@omb.eop.gov*.

Dated: November 16, 2007.

Gwellnar Banks,

Management Analyst, Office of the Chief Information Officer.

[FR Doc. E7–22770 Filed 11–20–07; 8:45 am]

BILLING CODE 3510–22–P

DEPARTMENT OF COMMERCE

National Oceanic and Atmospheric Administration

Availability of Seats for the Channel Islands National Marine Sanctuary Advisory Council

AGENCY: National Marine Sanctuary Program (NMSP), National Ocean Service (NOS), National Oceanic and Atmospheric Administration, Department of Commerce (DOC).

ACTION: Notice and request for applications.

SUMMARY: The Channel Islands National Marine Sanctuary (CINMS) is seeking applicants for the following vacant seats on its Sanctuary Advisory Council (Council): Education member and alternate, Chumash Community member and alternate, Tourism alternate, Recreational fishing member and alternate, and two Public-at-large alternates. Applicants are chosen based upon: their particular expertise and experience in relation to the seat for which they are applying, community and professional affiliations, views regarding the protection and management of marine resources, and the length of residence in the communities located near the Sanctuary. Applicants who are chosen as members should expect to serve in a volunteer capacity for 2-year terms, pursuant to the Council's Charter.

DATES: Applications are due by January 4, 2008.

ADDRESSES: Application kits may be obtained from Dani Lipski, Channel Islands National Marine Sanctuary, 113 Harbor Way Suite 150 Santa Barbara, CA 93109–2315. Completed applications should be sent to the same address. Application materials are also available at: *http://www.channelislands.noaa.gov/sac/news.html.*

FOR FURTHER INFORMATION CONTACT: Michael Murray, Channel Islands National Marine Sanctuary, 113 Harbor Way Suite 150 Santa Barbara, CA 93109–2315, 805–966–7107 extension 464, *michael.murray@noaa.gov.*

SUPPLEMENTARY INFORMATION: The CINMS Advisory Council was originally established in December 1998 and has a broad representation consisting of 21 members, including ten government agency representatives and eleven members from the general public. The Council functions in an advisory capacity to the Sanctuary Superintendent. The Council works in concert with the Sanctuary

Superintendent by keeping him or her informed about issues of concern throughout the Sanctuary, offering recommendations on specific issues, and aiding the Superintendent in achieving the goals of the National Marine Sanctuary Program. Specifically, the Council's objectives are to provide advice on: (1) Protecting natural and cultural resources and identifying and evaluating emergent or critical issues involving Sanctuary use or resources; (2) Identifying and realizing the Sanctuary's research objectives; (3) Identifying and realizing educational opportunities to increase the public knowledge and stewardship of the Sanctuary environment; and (4) Assisting to develop an informed constituency to increase awareness and understanding of the purpose and value of the Sanctuary and the National Marine Sanctuary Program.

Authority: 16 U.S.C. Sections 1431, *et. seq.*

(Federal Domestic Assistance Catalog Number 11.429 Marine Sanctuary Program)

Dated: November 8, 2007.

Daniel J. Basta,

Director, National Marine Sanctuary Program, National Ocean Service, National Oceanic and Atmospheric Administration.

[FR Doc. 07–5766 Filed 11–20–07; 8:45 am]

BILLING CODE 3510–NK–M

DEPARTMENT OF COMMERCE

National Oceanic and Atmospheric Administration

Diamond Alkali Superfund Site, Passaic River, New Jersey: Notice of Availability of and Request for Comments on the Draft Natural Resource Damage Assessment Plan (Draft NRDA Plan)

AGENCY: National Oceanic and Atmospheric Administration (NOAA), Commerce.

SUMMARY: The National Oceanic and Atmospheric Administration (NOAA) and the U.S. Department of the Interior (U.S. DOI), collectively acting as Federal natural resource trustees (Federal Trustees), have concluded their preliminary investigation of potential injuries to natural resources under their trusteeship that may have occurred due to releases of hazardous substances at the Diamond Alkali Superfund Site (Site). Following 43 CFR part 11, the Federal Trustees have prepared a Draft NRDA Plan outlining possible activities at this Site.

FOR FURTHER INFORMATION CONTACT: Through this notice, the public is asked to provide comments on the Draft NRDA Plan within thirty (30) calendar days from the publication date of this notice. Comments can be sent to: U.S. Fish and Wildlife Service, New Jersey Field Office, 927 N. Main Street, Pleasantville, NJ 08232, 609–383–3938 ext 26 or 21, *tim_kubiak@fws.gov* or *melissa_foster@fws.gov*.

SUPPLEMENTARY INFORMATION: NOAA, acting as the lead administrative trustee on behalf of itself and the U.S. DOI, have concluded their preliminary investigation of potential injuries to natural resources under their trusteeship that may have occurred as the result of releases of hazardous substances at this Site. Under 43 CFR 11, the Federal Trustees have completed a Preassessment Screen. The agencies serve as Federal Trustees under authority of Subpart G of the National Contingency Plan, 40 CFR Sections 300.600(b)(1–3), and 300.605.

The Federal Trustees decided to pursue an NRDA for this Site, and have issued letters to companies identified as potentially responsible parties (PRPs) in connection with the release of hazardous substances and subsequent damages resulting from potential natural resource injuries (see **Federal Register** notice, Vol. 72, No. 152, p. 44498, August 9, 2007). The notice letters asked PRPs to participate in the development, performance, and funding of an NRDA.

This Draft NRDA Plan was prepared by the Federal Trustees, and is the next step in the NRDA process. It documents exposure of natural resources to hazardous substances and identifies anticipated procedures for evaluating natural resource injuries potentially caused by such exposure.

The Draft NRDA Plan and related documents may be found at: *http://www.darrp.noaa.gov/northeast/passaic/index.html.*

Dated: November 13, 2007.

Captain Ken Barton,

Acting Director, Office of Response and Restoration, National Ocean Service, National Oceanic and Atmospheric Administration.

[FR Doc. E7–22712 Filed 11–20–07; 8:45 am]

BILLING CODE 3510–JE–P

DEPARTMENT OF COMMERCE

National Telecommunications and Information Administration

Commerce Spectrum Management Advisory Committee Meeting

AGENCY: National Telecommunications and Information Administration (NTIA), Departmentof Commerce (DOC).

ACTION: Notice of Open Meeting.

SUMMARY: This notice announces a public meeting of the Spectrum Management Advisory Committee (Committee). The Committee provides advice to the Assistant Secretary for Communications and Information on spectrum management matters.

DATES: The meeting will be held on December 6, 2007, from 1:30 p.m. to 4:30 p.m. Eastern Standard Time.

ADDRESSES: The meeting will be held at the U.S. Department of Commerce, Herbert C. Hoover Building, Room 4830, 1401 Constitution Avenue N.W., Washington, D.C. Public comments may be mailed to Spectrum Management Advisory Committee, 1401 Constitution Avenue N.W., Room 4725, Washington, D.C. 20230 or emailed to spectrumadvisory@ntia.doc.gov.

FOR FURTHER INFORMATION CONTACT: Meredith Baker, Designated Federal Official, at (202) 482–1840 or mbaker@ntia.doc.gov; Joe Gattuso at (202) 482–0977 or jgattuso@ntia.doc.gov; and/or visit NTIA's web site at www.ntia.doc.gov/.

SUPPLEMENTARY INFORMATION: *Background*: The Secretary of Commerce established the Spectrum Management Advisory Committee (Committee) to implement a recommendation of the President's Initiative on Spectrum Management pursuant to the President's November 29, 2004 Memorandum for the Heads of Executive Departments and Agencies on the subject of ''Spectrum Management for the 21st Century.''[1] This Committee is subject to the Federal Advisory Committee Act (FACA), 5 U.S.C. App. 2, and is consistent with the National Telecommunications and Information Administration Act, 47 U.S.C. § 904(b). The Committee provides advice to the Assistant Secretary of Commerce for Communications and Information on needed reforms to domestic spectrum policies and management to enable the introduction of new spectrum-dependent technologies and services, including long-range spectrum planning and policy reforms for expediting the American public's access to broadband services, public safety, and digital television. The Committee functions solely as an advisory body in compliance with the FACA.

Matters to Be Considered: The Committee will receive recommendations and reports from its Technical Sharing Efficiencies and

[1] *President's Memorandum on Improving Spectrum Management for the 21st Century*, 49 Weekly Comp. Pres. Doc. 2875 (Nov. 29, 2004) (Executive Memorandum).

Operational Sharing Efficiences subcommittee. It will consider matters to be taken up at its next meeting and will receive the final written report formally presenting recommendations adopted at its previous meeting on May 30, 2007. It will also provide an opportunity for public comment on these matters.

Time and Date: The meeting will be held on December 6, 2007, from 1:30 p.m. to 4:30 p.m. Eastern Standard Time. These times and the agenda topics are subject to change. Please refer to NTIA's web site, http://www.ntia.doc.gov, for the most up-to-date meeting agenda.

Place: U.S. Department of Commerce, Herbert C. Hoover Building, Room 4830, 1401 Constitution Avenue N.W., Washington, D.C. The meeting will be open to the public and press on a first-come, first-served basis. Space is limited. When arriving for the meeting, attendees must present photo or passport identification or a U.S. Government building pass, if applicable, and should arrive at least one-half hour prior to the start time of the meeting. The meeting will be physically accessible to people with disabilities. Individuals requiring special services, such as sign language interpretation or other ancillary aids are asked to contact Joe Gattuso at (202) 482–0977 or jgattuso@ntia.doc.gov at least two (2) business days prior to the meeting.

Status: Interested parties are invited to attend and to submit written comments. Interested parties are permitted to file written comments with the Committee at any time before or after a meeting. If interested parties wish to submit written comments for consideration by the Committee in advance of this meeting, they should be sent to the above listed address and received by close of business on November 30, 2007 to provide sufficient time for review. Comments received after November 30, 2007, will be distributed to the Committee but may not be reviewed prior to the meeting. It would be helpful if paper submissions also include a three and one-half inch computer diskette in HTML, ASCII, Word or WordPerfect format (please specify version). Diskettes should be labeled with the name and organizational affiliation of the filer, and the name of the word processing program used to create the document. Alternatively, comments may be submitted electronically to spectrumadvisory@ntia.doc.gov. Comments provided via electronic mail may also be submitted in one or more of the formats specified above.

Records: NTIA is keeping records of all Committee proceedings. Committee records are available for public inspection at NTIA's office at the address above. Documents including the Committee's charter, membership list, agendas, minutes, and any reports are or will be available on NTIA's Committee web site at http://www.ntia.doc.gov/advisory/spectrum.

Dated: November 16, 2007.

Kathy D. Smith,

Chief Counsel, National Telecommunications and Information Administration.

[FR Doc. E7–22795 Filed 11–20–07; 8:45 am]

BILLING CODE 3510–60–S

DEPARTMENT OF DEFENSE

Department of the Army

Notice of Availability of a Record of Decision (ROD) for Base Realignment and Closure Actions and Enhanced Use Lease (EUL) Actions at Fort Meade, MD

AGENCY: Department of the Army,DoD.

ACTION: Record of decision.

SUMMARY: The Department of the Army announces the availability of a ROD which summarizes the decision for implementing realignment actions as directed by the Base Realignment and Closure (BRAC) Commission and Department of Defense (DoD) EUL actions at Fort Meade, Maryland.

ADDRESSES: To obtain a copy of the ROD, contact the Public Affairs Office, Fort George G. Meade, 4550 Pershing Hall, Room 120, Fort Meade, MD 20755–5025; e-mail *meade.pao@conus.army.mil.*

FOR FURTHER INFORMATION CONTACT: Ms. Melanie Moore, Public Affairs Office, at (301) 677–1361 during normal business hours Monday through Friday.

SUPPLEMENTARY INFORMATION: The Army has decided to proceed with implementing the Proposed Action consistent with the analysis in the Environmental Impact Statement (EIS) dated August 2007, supporting studies and comments provided during formal comment and review periods. The Proposed Action includes construction and operation of proposed facilities to accommodate incoming military missions at Fort Meade. To implement the BRAC recommendations, Fort Meade will be receiving personnel, equipment, and missions from various closure and realignment actions within the DoD. To implement the BRAC Commission recommendations, the Army will provide the necessary facilities, buildings, and infrastructure to support incoming military missions and a net gain of about 5,700 personnel as mandated by the 2005 BRAC Commission's recommendations at Fort Meade. In addition, the Army will implement the DoD EUL actions which will include issuing a 50-year lease to a private developer for development of office and administrative buildings for an estimated 10,000 personnel on two parcels of land. In consideration, the developer will develop and construct two 18-hole golf courses on a third parcel of land. The No Action Alternative would not meet the Army's purpose and need for the Proposed Action as the BRAC realignment is required by Congress and needed for Army transformation to be effective.

Special consideration was given to the effect of the Proposed Action on natural resources, cultural resources, and traffic. All practicable means to avoid or minimize environmental harm from the selected alternative have been adopted. The Army will minimize effects on all environmental and socioeconomic resources by implementing best management practices as described in the EIS. Mitigation measures, as described in the ROD, will be implemented (subject to the availability of funding) to minimize, avoid, or compensate for the adverse effects identified in the EIS for water resources, biological resources, and transportation. The EIS also identifies transportation projects that could minimize adverse impacts from implementing the Proposed Action. The ROD describes the approach the Army will take to mitigate traffic concerns.

The ROD determines that implementing the Proposed Action reflects a proper balance between initiatives for protection of the environment, appropriate mitigation, and actions to achieve the Army's requirements.

An electronic version of the ROD can be viewed or downloaded from the following Web site: *http://www.hqda.army.mil/acsim/brac/nepa_eis_docs.htm.*

Dated: November 13, 2007.

Addison D. Davis, IV,

Deputy Assistant Secretary of the Army (Environment, Safety and Occupational Health).

[FR Doc. 07–5770 Filed 11–20–07; 8:45 am]

BILLING CODE 3710–08–M

DEPARTMENT OF ENERGY

Office of Science; Biological and Environmental Research Advisory Committee

AGENCY: Department of Energy.

ACTION: Notice of Open Meeting.

SUMMARY: This notice announces a meeting of the Biological and Environmental Research Advisory Committee. Federal Advisory Committee Act (Pub. L. 92–463, 86 Stat. 770) requires that public notice of these meetings be announced in the **Federal Register**.

DATES: Thursday, November 29, 2007, 9 a.m. to 5:30 p.m.; and Friday, November 30, 2007, 8:30 a.m. to 12:30 p.m.

ADDRESSES: American Geophysical Union (AGU), 2000 Florida Avenue, NW., Washington, DC 20009.

FOR FURTHER INFORMATION CONTACT: Dr. David Thomassen (301–903–9817; *david.thomassen@science.doe.gov*) Designated Federal Officer, Biological and Environmental Research Advisory Committee, U.S. Department of Energy, Office of Science, Office of Biological and Environmental Research, SC–23/ Germantown Building, 1000 Independence Avenue, SW., Washington, DC 20585–1290. The most current information concerning this meeting can be found on the Web site: *http://www.science.doe.gov/ober/berac/announce.html.*

SUPPLEMENTARY INFORMATION: *Purpose of the Meeting:* To provide advice on a continuing basis to the Director, Office of Science of the Department of Energy, on the many complex scientific and technical issues that arise in the development and implementation of the Biological and Environmental Research Program.

Tentative Agenda

Thursday, November 29, 2007, and Friday, November 30, 2007:

- Updates on the Free Air Carbon Dioxide Enrichment (FACE) Report, Integrated Assessment Program Report, and Climate Change Committee of Visitors Report.
- Update on the Environmental Molecular Sciences Laboratory (EMSL).
- Updates on BERAC Charges.
- Update on GTL Bioenergy Research Centers: Oak Ridge National Laboratory, Lawrence Berkeley National Laboratory, and the University of Wisconsin.
- AmeriFlux Status Report, Ken Davis, Penn State University.
- National Academies of Science Report on Nuclear Medicine.
- Report by the Acting Associate Director of Science for Biological and Environmental Research.
- Report on FACE Research Workshop, Cheryl Kuske, Los Alamos National Laboratory.
- Science Talk, Kerry Emanuel, MIT, Hurricanes and Climate Change.
- Perspectives from the Office of Management and Budget, Mike Holland, OMB.
- New business.
- Public comment (10 minute rule).

Public Participation: The day and a half meeting is open to the public. If you would like to file a written statement with the Committee, you may do so either before or after the meeting. If you would like to make oral statements regarding any of the items on the agenda, you should contact David Thomassen at the address or telephone number listed above. You must make your request for an oral statement at least five business days before the meeting. Reasonable provision will be made to include the scheduled oral statements on the agenda. The Chairperson of the Committee will conduct the meeting to facilitate the orderly conduct of business. Public comment will follow the 10-minute rule. This notice is being published less than 15 days before the date of the meeting due to programmatic issues.

Minutes: The minutes of this meeting will be available for public review and copying within 45 days at the BERAC Web site, *http://www.science.doe.gov/ober/berac/Minutes.html.*

Issued in Washington, DC, on November 15, 2007.

Rachel Samuel,

Deputy Committee Management Officer.

[FR Doc. E7–22765 Filed 11–20–07; 8:45 am]

BILLING CODE 6450–01–P

DEPARTMENT OF ENERGY

International Energy Agency Meetings

AGENCY: Department of Energy.

ACTION: Notice of Meetings.

SUMMARY: The Industry Advisory Board (IAB) to the International Energy Agency (IEA) will meet on December 3 and 4, 2007, at the headquarters of the IEA in Paris, France, in connection with a joint meeting of the IEA's Standing Group on Emergency Questions (SEQ) and the IEA's Standing Group on the Oil Market on December 3–4, and a meeting of SEQ on December 4.

DATES: December 3–4, 2007.

ADDRESSES: 9, rue de la Fédération, Paris, France.

FOR FURTHER INFORMATION CONTACT: Diana D. Clark, Assistant General for International and National Security Programs, Department of Energy, 1000 Independence Avenue, SW., Washington, DC 20585, 202–586–3417.

SUPPLEMENTARY INFORMATION: In accordance with section 252(c)(1)(A)(i) of the Energy Policy and Conservation Act (42 U.S.C. 6272(c)(1)(A)(i)) (EPCA), the following notice of meeting is provided:

Meetings of the Industry Advisory Board (IAB) to the International Energy Agency (IEA) will be held at the headquarters of the IEA, 9, rue de la Fédération, Paris, France, on December 3–4, 2007, beginning at 2:30 p.m. on December 3 and continuing on December 4 at 9:30 a.m. The purpose of this notice is to permit attendance by representatives of U.S. company members of the IAB at a joint meeting of the IEA's Standing Group on Emergency Questions (SEQ) and the IEA's Standing Group on the Oil Market (SOM) on December 3, and a meeting of the SEQ on December 4. The IAB will also hold a preparatory meeting among company representatives at the same location from 11 a.m. to approximately 12 noon on December 3. The agenda for this preparatory meeting is a review of the agenda of the SEQ/SOM meeting and a review of the agenda for an SEQ meeting to be held at the same location on December 4, 2007, beginning at 2:30 p.m. The SEQ meeting will be followed by a meeting organized by the SEQ of the Design Group for the SEQ's Emergency Response Exercise 4 (ERE4), to be held at the same location on December 5, 2007, beginning at 9:30 a.m., which meeting IAB members may also attend.

The agenda of the joint SEQ/SOM meeting on December 3 is under the control of the SEQ and the SOM. It is expected that the SEQ and the SOM will adopt the following agenda:

1. Adoption of the agenda of the joint SEQ/SOM session.

2. Approval of the Summary Record of the February 2007 joint SEQ/SOM session.

3. PART I: NEAR-TERM RISK ASSESSMENT WORKSHOP

- Introduction: ERE 4.
- Security risks in oil-producing countries.
- Physical oil supply outlook in the Middle East.
- Market dynamics during an oil disruption.
- Interaction between the various energy markets during an oil disruption.
- Discussion of possible scenarios.

4. PART II: STRENGTHENING GLOBAL OIL EMERGENCY RESPONSE CAPABILITIES

• Evolution of the IEA emergency response.

• Assessing a supply disruption from a market perspective.

• Sharing information in an emergency.

5. INTERACTING WITH CHINA AND INDIA.

6. Any other business and tentative dates of forthcoming SEQ/SOM sessions.

The agenda of the SEQ meeting on December 4, 2007 is under the control of the SEQ. It is expected that the SEQ will adopt the following agenda:

1. Adoption of the Agenda.

2. Approval of the Summary Record of the 120th Meeting.

3. Status of Compliance with IEP Stockholding Commitments.

4. Program of Work.

—The SEQ Program of Work for 2008.

5. Emergency Response Exercise 4.

—Report on Exercise in Capitals.
—Schedule for remainder of ERE4.

6. Report on Current Activities of the IAB.

7. Policy and Other Developments in Member Countries.

—Japan.
—Turkey.
—Poland.
—Slovak Republic.

8. Other Emergency Response Activities.

—Presentation of IEA publication ''Oil Supply Security: Emergency Response of IEA Countries 2007''.

9. Activities with International Organizations and Non-Member Countries.

—European Commission.
—Office of Global Dialogue activities.
—Report on ASEAN workshop on oil stockholding.
—Report on development of oil security measures and strategic stockholding in China and India.

10. Documents for Information.

—Emergency Reserve Situation of IEA Member Countries on July 1, 2007.
—Emergency Reserve Situation of IEA Candidate Countries on July 1, 2007.
—Base Period Final Consumption: 3Q 2006–2Q 2007.
—Monthly Oil Statistics: August 2007.
—Update of Emergency Contacts List.
—Nominations for the Settlement Dispute Centre Panel of Arbitrators.

11. Other Business.

—Tentative dates of Next SEQ Meetings.
—March 17–20, 2008.
—June 24–26, 2008.

The agenda of the ERE4 Design Group meeting on December 5, 2007, starting at 9:30 a.m. is to discuss planning for ERE4.

As provided in section 252(c)(1)(A)(ii) of the Energy Policy and Conservation Act (42 U.S.C. 6272(c)(1)(A)(ii)), the meetings of the IAB are open to representatives of members of the IAB and their counsel; representatives of members of the IEA's Standing Group on Emergency Questions and the IEA's Standing Group on the Oil Markets; representatives of the Departments of Energy, Justice, and State, the Federal Trade Commission, the General Accounting Office, Committees of Congress, the IEA, and the European Commission; and invitees of the IAB, the SEQ, the SOM, or the IEA.

Issued in Washington, DC, November 19, 2007.

Diana D. Clark,

Assistant General Counsel for International and National Security Programs.

[FR Doc. E7–22764 Filed 11–20–07; 8:45 am]

BILLING CODE 6450–01–P

ENVIRONMENTAL PROTECTION AGENCY

[EPA–HQ–SFUND–2007–0559, FRL–8498–3]

Agency Information Collection Activities; Submission to OMB for Review and Approval; Comment Request; Implementation of the Oil Pollution Act Facility Response Plan Requirements (Renewal); EPA ICR No. 1630.09, OMB Control No. 2050–0135

AGENCY: Environmental Protection Agency (EPA).

ACTION: Notice.

SUMMARY: In compliance with the Paperwork Reduction Act (PRA) (44 U.S.C. 3501 *et seq.*), this document announces that an Information Collection Request (ICR) has been forwarded to the Office of Management and Budget (OMB) for review and approval. This is a request to renew an existing approved collection. The ICR, which is abstracted below, describes the nature of the information collection and its estimated burden and cost.

DATES: Additional comments may be submitted on or before December 21, 2007.

ADDRESSES: Submit your comments, referencing Docket ID No. EPA–HQ–SFUND–2007–0559, to (1) EPA online using *http://www.regulations.gov* (our preferred method) or by mail to: EPA Docket Center (EPA/DC), Superfund Docket (Mailcode 2822T), 1200 Pennsylvania Ave., NW., Washington, DC 20460, and (2) OMB by mail to: Office of Information and Regulatory Affairs, Office of Management and Budget (OMB), Attention: Desk Officer for EPA, 725 17th Street, NW., Washington, DC 20503.

FOR FURTHER INFORMATION CONTACT: Lori Lee, Office of Solid Waste and Emergency Response, Office of Emergency Management, (Mail Code: 5104A), Environmental Protection Agency, 1200 Pennsylvania Ave., NW., Washington, DC 20460; telephone number: 202–564–8006; fax number: 202–564–2501; e-mail address: *lee.lori@epa.gov*.

SUPPLEMENTARY INFORMATION: EPA has submitted the following ICR to OMB for review and approval according to the procedures prescribed in 5 CFR 1320.12. On July 18, 2007 (72 FR 39406), EPA sought comments on this ICR pursuant to 5 CFR 1320.8(d). EPA received no comments. Any additional comments on this ICR should be submitted to EPA and OMB within 30 days of this notice.

EPA has established a public docket for this ICR under Docket ID No. EPA–HQ–SFUND–2007–0559, which is available for online viewing at *www.regulations.gov*, or in person viewing at the Superfund Docket in the EPA Docket Center (EPA/DC), EPA West, Room 3334, 1301 Constitution Ave., NW., Washington, DC. The EPA/DC Public Reading Room is open from 8:30 a.m. to 4:30 p.m., Monday through Friday, excluding legal holidays. The telephone number for the Reading Room is 202–566–1744, and the telephone number for the Superfund Docket is 202–566–0276.

Use EPA's electronic docket and comment system at *www.regulations.gov*, to submit or view public comments, access the index listing of the contents of the docket, and to access those documents in the docket that are available electronically. Once in the system, select ''docket search,'' then key in the docket ID number identified above. Please note that EPA's policy is that public comments, whether submitted electronically or in paper, will be made available for public viewing at *www.regulations.gov* as EPA receives them and without change, unless the comment contains copyrighted material, Confidential Business Information (CBI), or other information whose public disclosure is restricted by statute. For further information about the electronic docket, go to *http://www.regulations.gov*.

Title: Implementation of the Oil Pollution Act Facility Response Plan Requirements (Renewal).

ICR Numbers: EPA ICR No. 1630.09, OMB Control No. 2050–0135.

ICR Status: This ICR is scheduled to expire on November 30, 2007. Under OMB regulations, the Agency may continue to conduct or sponsor the collection of information while this submission is pending at OMB. An Agency may not conduct or sponsor, and a person is not required to respond to, a collection of information, unless it displays a currently valid OMB control number. The OMB control numbers for EPA's regulations in title 40 of the CFR, after appearing in the **Federal Register** when approved, are listed in 40 CFR part 9, are displayed either by publication in the **Federal Register** or by other appropriate means, such as on the related collection instrument or form, if applicable. The display of OMB control numbers in certain EPA regulations is consolidated in 40 CFR part 9.

Abstract: The authority for EPA's facility response plan (FRP) requirements is derived from section 311 of the Clean Water Act, as amended by the Oil Pollution Act of 1990. EPA's FRP regulation is codified at 40 CFR 112.20 and 112.21. All FRP-related reporting and recordkeeping activities are mandatory. No amendments were made to the FRP regulation since submission of the current ICR approval (November 30, 2004). While EPA recently finalized amendments to the SPCC rule (71 FR 77266 (December 26, 2006) and 72 FR 27443 (May 16, 2007)), these amendments are not expected to impact the number of facilities subject to FRP requirements, nor are they expected to substantively affect the burden of complying with FRP requirement.

Purpose of Data Collection

A facility-specific response plan will help an owner or operator identify the necessary resources to respond to an oil spill in a timely manner. If implemented effectively, the FRP will reduce the impact and severity of oil spills and may prevent spills because of the identification of risks at the facility. Although the facility owner or operator is the primary data user, EPA also uses the data in certain situations to ensure that facilities comply with the regulation and to help allocate response resources. State and local governments may also use the data to assist in local emergency preparedness planning efforts.

EPA reviews all submitted FRPs and must approve FRPs for those facilities whose discharges may cause ''significant and substantial harm'' to the environment. EPA approval is needed in order to ensure that facilities believed to pose the highest risk have planned for adequate resources and procedures to respond to a spill. (*See* 40 CFR 112.20(f)(3) for further information about the criteria for ''significant and substantial harm.'')

Response Plan Certification. Under § 112.20(e), the owner or operator of a facility subject to SPCC requirements in 40 CFR part 112 but that does not meet the ''substantial harm'' criteria in § 112.20(f)(1) must complete and maintain at the facility the certification form contained in Appendix C to part 112.

Response Plan Preparation. Under § 112.20(a) or (b), the owner or operator of a facility that meets the ''substantial harm'' criteria in § 112.20(f)(1) must prepare and submit to the EPA Regional Administrator an FRP following § 112.20(h). Such a facility may be a newly constructed facility or may be an existing facility that meets paragraph (f)(1) as a result of a planned change (paragraph (a)(2)(iii)) or an unplanned change (paragraph (a)(2)(iv)) in facility characteristics. Under paragraph (c), the owner or operator may be required to amend the FRP.

Response Plan Maintenance. Under § 112.20(g), the owner or operator must periodically review the FRP to ensure consistency with the National Oil and Hazardous Substances Pollution Contingency Plan and Area Contingency Plans. Under § 112.20(d), the facility owner or operator must revise and resubmit revised portions of the FRP after material changes at the facility. FRP changes that do not result in a material change in response capabilities shall be provided to the Regional Administrator as they occur. Training and periodic drills and exercises are required to test the effectiveness of the FRP and are required under § 112.21.

Recordkeeping. Under § 112.20(e), an owner or operator who determines that the FRP requirements do not apply must certify and retain a record of this determination. An owner or operator who is subject to the requirements must keep the FRP at the facility (§ 112.20(a)), keep updates to the FRP (§ 112.20(d)(1) and (2)), and log activities such as discharge prevention meetings, response training, and drills and exercises (§ 112.20(h)(8)(iv)).

Burden Statement. The average annual reporting and recordkeeping burdens for this collection of information to a newly regulated facility for which an FRP is not required (*i.e.,* facility where the owner or operator certifies that the facility does not meet the ''substantial harm'' criteria) are estimated at 0.4 hours per year. The average annual reporting and recordkeeping burdens to a newly regulated facility for which an FRP is required (*i.e.,* first-year costs for plan development) are estimated at 99.7 hours per year. The average annual reporting and recordkeeping burdens to a facility for which the owner or operator is maintaining an FRP (*i.e.,* subsequent year costs for annual plan maintenance) are estimated at 240.1 hours. Burden means the total time, effort, or financial resources expended by persons to generate, maintain, retain, or disclose or provide information to or for a Federal agency. This includes the time needed to review instructions; develop, acquire, install, and utilize technology and systems for the purposes of collecting, validating, and verifying information, processing and maintaining information, and disclosing and providing information; adjust the existing ways to comply with any previously applicable instructions and requirements which have subsequently changed; train personnel to be able to respond to a collection of information; search data sources; complete and review the collection of information; and transmit or otherwise disclose the information.

Respondents/Affected Entities: Entities potentially affected by this action are a subset of facilities that are required to have a spill prevention, control, and countermeasure (SPCC) plan under the Oil Pollution Prevention regulation (40 CFR part 112).

Estimated Number of Respondents: 22,574.

Frequency of Response: Less than once a year.

Estimated Total Annual Hour Burden: 432,627.

Estimated Total Annual Cost: $17,427,828 includes $29,483 annualized capital costs.

Changes in the Estimates: There is a decrease of 202,367 hours in the total estimated burden currently identified in the OMB Inventory of Approved ICR Burdens. This decrease reflects EPA's current inventory of facilities that have submitted and are maintaining an FRP as per 40 CFR part 112. While there have been no changes in the regulation that affected the per-facility regulatory burden, the number of facilities currently subject to FRP requirements is lower than had been estimated for the current ICR, resulting in a lower aggregate burden.

Dated: November 14, 2007.

Richard T. Westlund,

Acting Director, Collection Strategies Division.

[FR Doc. E7–22756 Filed 11–20–07; 8:45 am]

BILLING CODE 6560–50–P

ENVIRONMENTAL PROTECTION AGENCY

[FRL–8498–4]

State Innovation Grant Program, Notice of Availability of Solicitation for Proposals for 2008 Awards

AGENCY: Environmental Protection Agency (EPA).

ACTION: Notice.

SUMMARY: The U.S. Environmental Protection Agency, National Center for Environmental Innovation (NCEI) is giving notice of the availability of its solicitation for proposals for the 2008 grant program to support innovation by state environmental regulatory agencies—the ''State Innovation Grant Program.''

The solicitation is available at the Agency's State Innovation Grant Web site: *http://www.epa.gov/innovation/stategrants/solicitation2008.pdf*, or may be requested from the Agency by e-mail to: *innovation_state_grants@epa.gov*, telephone, or by mail. Only the principal environmental regulatory agency within each State (generally, where delegated authorities for Federal environmental regulations exist) is eligible to receive these grants.

DATES: State environmental regulatory agencies will have until January 3, 2008 to respond with a pre-proposal, budget, and project summary. The environmental regulatory agencies from the fifty (50) States; Washington, DC, and four (4) territories were notified of the solicitation's availability by fax and email transmittals on November 15, 2007.

ADDRESSES: Copies of the solicitation can be downloaded from the Agency's Web site at: *http://www.epa.gov/innovation/stategrants* or may be requested by telephone (202–566–2186), or by e-mail (*Innovation_State_Grants@epa.gov*). You can request a solicitation application package be sent to you by fax or by mail by contacting NCEI as indicated below.

Applicants are requested to apply online using the Grants.gov Web site with an electronic signature. Applicants are encouraged to submit their pre-proposals early. For those applicants who lack the technical capability to apply electronically via Grants.gov, please contact Sherri Walker by phone at: (202) 566–2186 and/or by e-mail to: *innovation_state_grants@epa.gov* for alternative submission procedures. Proposals submitted in response to this solicitation, or questions concerning the solicitation should be sent to: State Innovation Grants Program, National Center for Environmental Innovation, Office of the Administrator, U.S. Environmental Protection Agency (MC 1807T), 1200 Pennsylvania Ave., NW., Washington, DC 20460, (202) 566–2186, (202) 566–2220 FAX, *Innovation_State_Grants@epa.gov*.

For courier delivery only: Sherri Walker, State Innovation Grants Program, U.S. EPA, EPA West Building, Room 4214D, 1301 Constitution Ave., NW., Washington, DC 20005.

Proposal responses or questions may also be sent by fax to (202–566–2220), addressed to the ''State Innovation Grant Program,''or by e-mail to: *Innovation_State_Grants@epa.gov*. We encourage e-mail responses. If you have questions about responding to this notice, please contact EPA at this e-mail address or fax number, or you may call Sherri Walker at 202–566–2186. EPA will acknowledge all responses it receives to this notice.

SUPPLEMENTARY INFORMATION: The U.S. Environmental Protection Agency (EPA) is soliciting pre-proposals for an assistance agreement program (the ''State Innovation Grant Program'') in an effort to support innovation by State environmental regulatory agencies. In April 2002, EPA issued its plan for future innovation efforts, published as *Innovating for Better Environmental Result: A Strategy to Guide the Next Generation of Innovation at EPA* (EPA 100–R–02–002; *http://www.epa.gov/innovation/pdf/strategy.pdf*). This assistance agreement program strengthens EPA's partnership with the States by supporting state innovation compatible with EPA's *Innovation Strategy*. EPA wants to encourage states to build on previous experience (theirs and others) to undertake strategic innovation projects that promote larger-scale models for ''next generation'' environmental protection and promise better environmental outcomes and other beneficial results. EPA is interested in funding projects that: (i) Go beyond a single facility experiment and provide change that is ''systems-oriented;'' (ii) provide better results from a program, process, or sector-wide innovation; and (iii) promote integrated (multi-media) environmental management with a high potential for transfer to other states, U.S. territories, and tribes.

''Innovation in Permitting'' is again the theme for the 2008 solicitation. Under this theme, EPA is interested in pre-proposals that:

(a) Support the development of state Environmental Results Programs (ERPs);

(b) Implement National Environmental Performance Track (PT) or similar performance-based environmental leadership programs by states, particularly including the development and implementation of incentives; or

(c) Involve the application of Environmental Management Systems (EMS), including those that explore the relationship of EMS to permitting, or otherwise support integrated or multimedia strategies.

EPA continues to interpret ''innovation in permitting'' broadly to include permitting programs, pesticide licensing programs, and other alternatives or supplements to permitting programs. EPA is interested in creative approaches for both: (1) Achieving mandatory federal and state standards; and (2) encouraging performance and addressing environmental issues above and beyond minimum requirements. EPA's focus on a small number of topics within this general subject area effectively concentrates the limited resources available for greater strategic impact. EPA may contemplate a very limited number of projects not linked to these focus areas, but otherwise related to the general theme of innovation in permitting, in particular as they address EPA regional and state environmental permitting priorities.

This solicitation begins the sixth State Innovation Grant competition. Of the 35 projects that have been awarded in the prior rounds seventeen (17) were provided for development of environmental results programs, eight (8) were to enhance performance-based environmental leadership programs, eight (8) were related to environmental management systems and permitting, two (2) were for watershed-based permitting, and one (1) was for an information technology innovation for the application of geographic information systems (GIS) and a web-based portal to a permitting process. For information on prior State Innovation Grant Program solicitations and awards, please see the EPA State Innovation Grants Web site at *http://www.epa.gov/innovation/stategrants.*

Dated: November 6, 2007.

Elizabeth Shaw,

Director, Office of Environmental Policy Innovation.

[FR Doc. E7–22755 Filed 11–20–07; 8:45 am]

BILLING CODE 6560–50–P

ENVIRONMENTAL PROTECTION AGENCY

[EPA–HQ–OPP–2007–0400;FRL–8156–5]

4-Aminopyridine Reregistration Eligibility Decision; Notice of Availability

AGENCY: Environmental Protection Agency (EPA).

ACTION: Notice.

SUMMARY: This notice announces the availability of EPA's Reregistration Eligibility Decision (RED) for the pesticide 4-aminopyridine, and opens a public comment period on this document. The Agency's risk assessments and other related documents also are available in the 4-aminopyridine Docket. 4-aminopyridine is an avicide with flock-alarming properties. It is registered in the U.S. to control birds of public health concern around nesting, feeding, loafing, and roosting sites on or in the area of structures, feedlots, landfills, and airports. EPA has reviewed 4-aminopyridine through the public participation process that the Agency uses to involve the public in developing pesticide reregistration and tolerance reassessment decisions. Through these programs, EPA is ensuring that all pesticides meet current health and safety standards.

DATES: Comments must be received on or before January 22, 2008.

ADDRESSES: Submit your comments, identified by docket identification (ID) number EPA–HQ–OPP–2007–0400, by one of the following methods:

• *Federal eRulemaking Portal*: *http://www.regulations.gov*. Follow the on-line instructions for submitting comments.

• *Mail*: Office of Pesticide Programs (OPP) Regulatory Public Docket (7502P), Environmental Protection Agency, 1200 Pennsylvania Ave., NW., Washington, DC 20460–0001.

• *Delivery*: OPP Regulatory Public Docket (7502P), Environmental Protection Agency, Rm. S–4400, One Potomac Yard (South Bldg.), 2777 S. Crystal Dr., Arlington, VA. Deliveries are only accepted during the Docket's normal hours of operation 8:30 a.m. to 4 p.m., Monday through Friday, excluding legal holidays. Special arrangements should be made for deliveries of boxed information. The Docket Facility telephone number is (703) 305–5805.

Instructions: Direct your comments to docket ID number EPA–HQ–OPP–2007–0400. EPA's policy is that all comments received will be included in the docket without change and may be made available on-line at *http://www.regulations.gov*, including any personal information provided, unless the comment includes information claimed to be Confidential Business Information (CBI) or other information whose disclosure is restricted by statute. Do not submit information that you consider to be CBI or otherwise protected through regulations.gov or e-mail. The regulations.gov website is an ''anonymous access'' system, which means EPA will not know your identity or contact information unless you provide it in the body of your comment. If you send an e-mail comment directly to EPA without going through regulations.gov, your e-mail address will be automatically captured and included as part of the comment that is placed in the docket and made available on the Internet. If you submit an electronic comment, EPA recommends that you include your name and other contact information in the body of your comment and with any disk or CD-ROM you submit. If EPA cannot read your comment due to technical difficulties and cannot contact you for clarification, EPA may not be able to consider your comment. Electronic files should avoid the use of special characters, any form of encryption, and be free of any defects or viruses.

Docket: All documents in the docket are listed in the docket index available in regulations.gov. To access the electronic docket, go to *http://www.regulations.gov*, select ''Advanced Search,'' then ''Docket Search.'' Insert the docket ID number where indicated and select the ''Submit'' button. Follow the instructions on the regulations.gov website to view the docket index or access available documents. Although listed in the index, some information is not publicly available, e.g., CBI or other information whose disclosure is restricted by statute. Certain other material, such as copyrighted material, is not placed on the Internet and will be publicly available only in hard copy form. Publicly available docket materials are available either in the electronic docket at *http://www.regulations.gov*, or, if only available in hard copy, at the OPP Regulatory Public Docket in Rm. S–4400, One Potomac Yard (South Bldg.), 2777 S. Crystal Dr., Arlington, VA. The hours of operation of this Docket Facility are from 8:30 a.m. to 4 p.m., Monday through Friday, excluding legal holidays. The Docket Facility telephone number is (703) 305–5805.

FOR FURTHER INFORMATION CONTACT: Katie Hall, Special Review and Reregistration Division (7508P), Office of Pesticide Programs, Environmental Protection Agency, 1200 Pennsylvania Ave., NW., Washington, DC 20460–0001; telephone number: (703) 308–0166; fax number: (703) 308–7070; e-mail address: *hall.katie@epa.gov*.

SUPPLEMENTARY INFORMATION:

I. General Information

A. Does this Action Apply to Me?

This action is directed to the public in general, and may be of interest to a wide range of stakeholders including environmental, human health, and agricultural advocates; the chemical industry; pesticide users; and members of the public interested in the sale, distribution, or use of pesticides. Since others also may be interested, the Agency has not attempted to describe all the specific entities that may be affected by this action. If you have any questions regarding the applicability of this action to a particular entity, consult the person listed under **FOR FURTHER INFORMATION CONTACT.**

B. What Should I Consider as I Prepare My Comments for EPA?

1. *Submitting CBI*. Do not submit this information to EPA through regulations.gov or e-mail. Clearly mark the part or all of the information that you claim to be CBI. For CBI information in a disk or CD-ROM that you mail to EPA, mark the outside of the disk or CD-ROM as CBI and then identify electronically within the disk or CD-ROM the specific information that is claimed as CBI. In addition to one complete version of the comment that includes information claimed as CBI, a copy of the comment that does not contain the information claimed as CBI must be submitted for inclusion in the public docket. Information so marked will not be disclosed except in accordance with procedures set forth in 40 CFR part 2.

2. *Tips for preparing your comments*. When submitting comments, remember to:

i. Identify the document by docket ID number and other identifying information (subject heading, **Federal Register** date and page number).

ii. Follow directions. The Agency may ask you to respond to specific questions or organize comments by referencing a Code of Federal Regulations (CFR) part or section number.

iii. Explain why you agree or disagree; suggest alternatives and substitute language for your requested changes.

iv. Describe any assumptions and provide any technical information and/or data that you used.

v. If you estimate potential costs or burdens, explain how you arrived at your estimate in sufficient detail to allow for it to be reproduced.

vi. Provide specific examples to illustrate your concerns and suggest alternatives.

vii. Explain your views as clearly as possible, avoiding the use of profanity or personal threats.

viii. Make sure to submit your comments by the comment period deadline identified.

II. Background

A. What Action is the Agency Taking?

Under section 4 of the Federal Insecticide, Fungicide, and Rodenticide Act (FIFRA), EPA is reevaluating existing pesticides to ensure that they meet current scientific and regulatory standards. EPA has completed a RED for the pesticide 4-aminopyridine under section 4(g)(2)(A) of FIFRA. 4-aminopyridine is a restricted use avicide used to control birds of public health concern around nesting, feeding, loafing, and roosting sites on or in the area of structures, feedlots, landfills, and airports. Pigeons; house sparrows; crows; some species of grackles; cowbirds; starlings; red-winged, yellow-headed, rusty, and Brewers blackbirds are listed as target species on 4-aminopyridine labels. EPA has determined that the data base to support reregistration is substantially complete and that treated bait products containing 4-aminopyridine are eligible for reregistration, provided the risks are mitigated in the manner described in the RED. Upon submission of any required product specific data under section 4(g)(2)(B) of FIFRA and any necessary changes to the registration and labeling (either to address concerns identified in the RED or as a result of product specific data), EPA will make a final reregistration decision under section 4(g)(2)(C) of FIFRA for products containing 4-aminopyridine.

EPA applying the principles of public participation to all pesticides undergoing reregistration and tolerance reassessment. The Agency's Pesticide Tolerance Reassessment and Reregistration; Public Participation Process, published in the **Federal Register** on May 14, 2004, (69 FR 26819) (FRL–7357–9) explains that in conducting these programs, EPA is tailoring its public participation process to be commensurate with the level of risk, extent of use, complexity of issues, and degree of public concern associated with each pesticide. Due to its uses, risks, and other factors, 4-aminopyridine was reviewed through the modified 4–Phase process. Through this process, EPA worked extensively with stakeholders and the public to reach the regulatory decisions for 4-aminopyridine.

The reregistration program is being conducted under congressionally mandated time frames, and EPA recognizes the need both to make timely decisions and to involve the public. The Agency is issuing the 4-aminopyridine RED for public comment. This comment period is intended to provide an additional opportunity for public input and a mechanism for initiating any necessary amendments to the RED. All comments should be submitted using the methods in **ADDRESSES**, and must be received by EPA on or before the closing date. These comments will become part of the Agency Docket for 4-aminopyridine. Comments received after the close of the comment period will be marked ''late.'' EPA is not required to consider these late comments.

The Agency will carefully consider all comments received by the closing date and will provide a Response to Comments Memorandum in the Docket and regulations.gov. If any comment significantly affects the document, EPA also will publish an amendment to the RED in the **Federal Register**. In the absence of substantive comments requiring changes, the 4-aminopyridine RED will be implemented as it is now presented.

B. What Is the Agency's Authority for Taking this Action?

Section 4(g)(2) of FIFRA, as amended, directs that, after submission of all data concerning a pesticide active ingredient, the Administrator shall determine whether pesticides containing such active ingredient are eligible for reregistration, before calling in product specific data on individual end-use products and either reregistering products or taking other ''appropriate regulatory action.''

List of Subjects

Environmental protection, Pesticides and pests.

Dated: November 7, 2007.

Peter Caulkins,

Acting Director, Special Review and Reregistration Division, Office of Pesticide Programs.

[FR Doc. E7–22655 Filed 11–20–07; 8:45 am]

BILLING CODE 6560–50–S

ENVIRONMENTAL PROTECTION AGENCY

[EPA–HQ–OPP–2007–0103; FRL–8339–3]

Pyridate; Product Cancellation Order to Terminate Uses of Certain Pesticide Registrations

AGENCY: Environmental Protection Agency (EPA).

ACTION: Notice.

SUMMARY: This notice announces EPA's order for the cancellation, voluntarily requested by the registrant and accepted by the Agency, of products containing the pesticide pyridate, pursuant to section 6(f)(1) of the Federal Insecticide, Fungicide, and Rodenticide Act (FIFRA), as amended. This cancellation order follows an April 18, 2007, **Federal Register** Notice of Receipt of Request from the pyridate registrant to voluntarily cancel all of its pyridate section 24(c) product registrations registered under FIFRA. These are the last pyridate products registered for use in the United States. In the April 18, 2007, notice, EPA indicated that it would issue an order implementing the cancellation, unless the Agency received substantive comments within the 180–day comment period that would merit its further review of these requests, or unless the registrant withdrew its request within this period. The Agency received one comment on the notice but it did not merit further review of the request. Further, the registrant did not withdraw the request. Accordingly, EPA hereby issues in this notice a cancellation order granting the requested cancellation to terminate uses. Any distribution, sale, or use of the pyridate products subject to this cancellation order is permitted only in accordance with the terms of this order, including any existing stocks provisions.

DATES: The cancellations are effective November 21, 2007.

FOR FURTHER INFORMATION CONTACT: John W. Pates, Jr., Special Review and Reregistration Division (7508P), Office of Pesticide Programs, Environmental Protection Agency, 1200 Pennsylvania Ave., NW., Washington, DC 20460–0001; telephone number: (703) 308–

8195; fax number: (703) 308–8005; e-mail address: *pates.john@epa.gov*.

SUPPLEMENTARY INFORMATION:

I. General Information

A. Does this Action Apply to Me?

This action is directed to the public in general, and may be of interest to a wide range of stakeholders including environmental, human health, and agricultural advocates; the chemical industry; pesticide users; and members of the public interested in the sale, distribution, or use of pesticides. Since others also may be interested, the Agency has not attempted to describe all the specific entities that may be affected by this action. If you have any questions regarding the applicability of this action to a particular entity, consult the person listed under **FOR FURTHER INFORMATION CONTACT.**

B. How Can I Get Copies of this Document and Other Related Information?

1. *Docket*. EPA has established a docket for this action under docket identification (ID) number EPA–HQ–OPP–2007–0103. Publicly available docket materials are available either in the electronic docket at *http://www.regulations.gov*, or, if only available in hard copy, at the Office of Pesticide Programs (OPP) Regulatory Public Docket in Rm. S–4400, One Potomac Yard (South Bldg.), 2777 S. Crystal Dr., Arlington, VA. The hours of operation of this Docket Facility are from 8:30 a.m. to 4 p.m., Monday through Friday, excluding legal holidays. The Docket Facility telephone number is (703) 305–5805.

2. *Electronic access*. You may access this **Federal Register** document electronically through the EPA Internet under the **Federal Register** listings at *http://www.epa.gov/fedrgstr*.

II. What Action is the Agency Taking?

This notice announces the cancellation to terminate use, as requested by the registrant, of all section 24(c) pyridate products registered under FIFRA. These registrations are listed in sequence by registration number in Table 1 of this unit.

TABLE 1.—PYRIDATE PRODUCT CANCELLATIONS

EPA Registration Number	Product Name
CA010008	Tough 5EC
ID010006	Tough 5EC
IN010001	Tough 5EC
MT010003	Tough 5EC
ND000007	Tough 5EC
OR010005	Tough 5EC
WA010007	Tough 5EC
WI010005	Tough 5EC

Table 2 of this unit includes the name and address of record for the registrant of the products in Table 1 of this unit.

TABLE 2.—REGISTRANT OF CANCELED PYRIDATE PRODUCTS

EPA Company Number	Company Name and Address
100	Syngenta Crop Protection, Inc., P.O. Box 18300, Greensboro, NC 27419–8300

III. Summary of Public Comments Received and Agency Response to Comments

During the public comment period provided, EPA received one comment in response to the **Federal Register** notice of April 18, 2007 (72 FR 19491) (FRL–8124–4), announcing the Agency's receipt of the request for voluntary cancellation. The comment received was a request for an extension of the Special Local Need label to allow the use of existing stocks of pyridate by mint growers. However, the **Federal Register** notice already specified that mint growers may use the FIFRA 24(c) labels to apply existing stocks of the previously-canceled parent product, Tough EC (EPA Reg. No. 100–880) to mint, until such existing stocks are exhausted. For this reason, the Agency does not believe that the comment submitted during the comment period merits further review or a denial of the request for voluntary cancellation.

IV. Cancellation Order

Pursuant to FIFRA section 6(f), EPA hereby approves the requested cancellation to terminate use of the pyridate FIFRA section 24(c) registrations identified in Table 1. Accordingly, the Agency orders that the pyridate FIFRA 24(c) registrations identified in Table 1 are hereby canceled. Any distribution, sale, or use of existing stocks of the products identified in Table 1 of Unit II. in a manner inconsistent with any of the Provisions for Disposition of Existing Stocks set forth in Unit VI. will be considered a violation of FIFRA.

V. What Is the Agency's Authority for Taking this Action?

Section 6(f)(1) of FIFRA provides that a registrant of a pesticide product may at any time request that any of its pesticide registrations be canceled or amended to terminate one or more uses. FIFRA further provides that, before acting on the request, EPA must publish a notice of receipt of any such request in the **Federal Register**. Thereafter, following the public comment period, the Administrator may approve such a request.

VI. Provisions for Disposition of Existing Stocks

Existing stocks are those stocks of registered pesticide products which are currently in the United States and which were packaged, labeled, and released for shipment prior to the effective date of the cancellation action. The cancellation order issued in this notice includes the following existing stocks provisions.

The Agency intends to allow persons other than the registrant to continue to use the FIFRA section 24(c) labels to apply existing stocks of the previously-canceled parent section 3 product, Tough 5EC (EPA Reg. No. 100–880), to mint, provided such use is consistent with the section 24(c) labels, until such existing stocks are exhausted. The registrant will not be permitted to sell or distribute the previously-canceled parent section 3 product, Tough 5EC (EPA Reg. No. 100–880), but existing stocks already in the hands of dealers or users may be distributed, sold or used legally until they are exhausted.

List of Subjects

Environmental protection, Pesticides and pests.

Dated: November 13, 2007,

Peter Caulkins,

Acting Director, Special Review and Reregistration Division, Office of Pesticide Programs.

[FR Doc. E7–22663 Filed 11–20–07; 8:45 am]

BILLING CODE 6560–50–S

ENVIRONMENTAL PROTECTION AGENCY

[EPA–HQ–OPP–2007–1071; FRL–8156–4]

Pesticides; Availability of Updated Schedule for Registration Review

AGENCY: Environmental Protection Agency (EPA).

ACTION: Notice.

SUMMARY: EPA is announcing the availability of an updated schedule for the pesticide registration review program, the periodic review of all registered pesticides mandated by section 3(g) of the Federal Insecticide, Fungicide, and Rodenticide Act (FIFRA). This program began in fiscal year (FY) 2007 after the registration review rule became effective. Twenty-five pesticides have since entered the registration review process. This updated schedule provides the timetable for opening dockets for the next four years of the registration review program—FY 2008 to 2011—and includes information on the FY 2007 registration review cases.

FOR FURTHER INFORMATION CONTACT: Kennan Garvey, Special Review and Reregistration Division (7508P), Office of Pesticide Programs, Environmental Protection Agency, 1200 Pennsylvania Ave., NW., Washington, DC 20460–0001; telephone number: (703) 305–7106; fax number: (703) 308–8090; e-mail address: *garvey.kennan@epa.gov*.

SUPPLEMENTARY INFORMATION:

I. General Information

A. Does this Action Apply to Me?

You may be potentially affected by this action if you hold pesticide registrations. Pesticide users or other persons interested in the regulation of the sale, distribution, or use of pesticides may also be interested in this action. Potentially affected entities may include, but are not limited to:

- Producers of pesticide products (NAICS code 32532).
- Producers of antifoulant paints (NAICS code 32551).
- Producers of antimicrobial pesticides (NAICS code 32561).
- Producers of nitrogen stabilizer products (NAICS code 32531).
- Producers of wood preservatives (NAICS code 32519).

This listing is not intended to be exhaustive, but rather provides a guide for readers regarding entities likely to be affected by this action. Other types of entities not listed in this unit could also be affected. The North American Industrial Classification System (NAICS) codes have been provided to assist you and others in determining whether this action might apply to certain entities. To determine whether you or your business may be affected by this action, you should carefully examine the applicability provisions in 40 CFR 155.40 of the regulatory text of the **Federal Register** of August 9, 2006 (71 FR 45719) (FRL–8080–4). If you have any questions regarding the applicability of this action to a particular entity, consult the person listed under **FOR FURTHER INFORMATION CONTACT**.

B. How Can I Get Copies of this Document and Other Related Information?

1. *Docket*. EPA has established a docket for this action under docket identification (ID) number EPA–HQ–OPP–2007–1071. Publicly available docket materials are available either in the electronic docket at *http://www.regulations.gov*, or, if only available in hard copy, at the Office of Pesticide Programs (OPP) Regulatory Public Docket in Rm. S–4400, One Potomac Yard (South Bldg.), 2777 S. Crystal Dr., Arlington, VA. The hours of operation of this Docket Facility are from 8:30 a.m. to 4 p.m., Monday through Friday, excluding legal holidays. The Docket Facility telephone number is (703) 305–5805.

2. *Electronic access*. You may access this **Federal Register** document electronically through the EPA Internet under the ''**Federal Register**'' listings at *http://www.epa.gov/fedrgstr*.

II. Background

A. What Action is the Agency Taking?

EPA is issuing an updated schedule for the registration review program, the Agency's periodic review of all registered pesticides mandated by section 3(g) of FIFRA. This updated schedule provides the timetable for opening dockets for the next four years of the program—FY 2008 to 2011. (See the **Federal Register** of October 11, 2006 (71 FR 59786, FRL–8096–8); *http://www.epa.gov/fedrgstr/EPA-PEST/2006/October/Day-11/p16483.htm*.

The Pesticide Registration Improvement Act of 2003 was recently amended and extended. The Act provides for the continuation of annual pesticide maintenance fees and authorizes their use for registration review. The Act also requires EPA to complete registration review decisions by October 1, 2022 for all pesticides registered as of October 1, 2007. To ensure meeting this requirement, EPA will open approximately 70 pesticide registration review dockets annually beginning in fiscal year 2009 and continuing through 2017 so that almost all currently-registered pesticides have dockets opened by 2017. Some biopesticide dockets will be opened in 2018 through 2020. The Agency anticipates that this scheduling will provide adequate lead times to complete registration review decisions for all currently-registered pesticides by 2022. For the first several years of the program, EPA will be developing a pipeline of pesticides under review so that it will have the capacity to make approximately 70 decisions each year. EPA expects a total of 722 pesticide cases comprising 1,135 pesticide active ingredients to undergo registration review by 2022.

Each pesticide's place on the schedule is generally determined by its baseline date — the date of its last substantive review — with the oldest cases going first. The baseline date for a pesticide that was subject to reregistration is the date of the Reregistration Eligibility Decision (RED). The baseline date for pesticides that were not subject to reregistration is the registration date of the first product containing the active ingredient. Although the schedule generally is constructed chronologically, some registration review cases are grouped in the schedule for greater efficiency. For example, pesticides that are chemically related or use-related (e.g., organophosphate and carbamate chemical classes, the coppers group, and the pyrethroids, pyrethrins, and syngergists group) generally will be reviewed during the same time frame.

Background information on the program is provided at: *http://www.epa.gov/oppsrrd1/registration_review/*.

An explanation of the schedule is at: *http://www.epa.gov/oppsrrd1/registration_review/explanation.htm*.

The current schedule is available at: *http://www.epa.gov/oppsrrd1/registration_review/schedule.htm.*

B. What is the Agency's Authority for Taking this Action?

EPA is announcing this updated schedule for the registration review program as provided in 40 CFR 155.42(d) and 155.44 of the Procedural Regulations for Registration Review: Final Rule (*http://www.epa.gov/fedrgstr/EPA-PEST/2006/August/Day-09/p12904.htm*). The Agency may consider issues raised by the public or registrant when reviewing a posted schedule, to schedule a pesticide registration review, or to modify the schedule of a pesticide registration review as appropriate. This schedule will be updated at least once every year.

List of Subjects

Environmental protection, Agricultural commodities, Pesticides and pests.

Dated: November 7, 2007.

Peter Caulkins,

Acting Director, Special Review and Reregistration Division, Office of Pesticide Programs.

[FR Doc. E7–22382 Filed 11–20–07; 8:45 am]

BILLING CODE 6560–50–S

ENVIRONMENTAL PROTECTION AGENCY

[FRL–8498–5]

Proposed Administrative Cost Recovery Settlement Pursuant to the Comprehensive Environmental Response, Compensation, and Liability Act; Universal Laboratories Superfund Site, Detroit, MI, Wayne County and Mr. Joseph Z. Oram, 29501 Greenfield, Suite 219, Southfield, MI

AGENCY: Environmental Protection Agency (EPA).

ACTION: Notice; request for public comment.

SUMMARY: In accordance with Section 122(i) of the Comprehensive Environmental Response, Compensation, and Liability Act, as amended (''CERCLA'') 42 U.S.C. 9622(i), notice is hereby given of a proposed administrative settlement for recovery of past response costs concerning the Universal Laboratories Superfund Site in Detroit, Michigan with the following Settling Party: Mr. Joseph Z. Oram, 29501 Greenfield, Suite 219, Southfield, Michigan. The settlement requires that the Settling Party shall pay $28,000.00 to the Hazardous Substance Superfund within 30 days of the effective date of the CERCLA Section 122(h) Administrative Order. Settling Party shall also pay interest at the Superfund interest rate (5.02% through September 30, 2007, and 4.34% as of October 1, 2007) for the time period between March 29, 2007 and the date of payment. The settlement includes a covenant not to sue the Settling Party pursuant to Section 107(a) of CERCLA, 42 U.S.C. 9607(a), to recover past response costs. This covenant not to sue is conditioned upon the satisfactory performance by Settling Party of its obligations under the Agreement. U.S. EPA is proposing this Agreement because it provides reimbursement to U.S. EPA for part of its past costs at the Universal Laboratories Superfund Site.

For thirty (30) days following the date of publication of this notice, the Agency will receive written comments relating to the settlement. The Agency will consider all comments received and may modify or withdraw its consent to the settlement if comments received disclose facts or considerations which indicate that the settlement is inappropriate, improper, or inadequate. The Agency's response to any comments received will be available for public inspection at the Superfund Division Record Center, U.S. Environmental Protection Agency, 77 West Jackson Blvd., Chicago, Illinois 60604–3590.

DATES: Comments must be submitted on or before December 21, 2007.

ADDRESSES: The proposed settlement is available for public inspection at the Office of Regional Counsel, U.S. EPA, Region 5, 77 W. Jackson Blvd., 14th Fl., Chicago, Illinois 60604. A copy of the proposed settlement may be obtained from Thomas Turner, Office of Regional Counsel, Mail Code C–14J, U.S. EPA, Region 5, 77 West Jackson Blvd., Chicago, Illinois 60604. Comments should reference the Universal Laboratories Superfund Site, Detroit, Michigan and should be addressed to Debbie Keating, Superfund Division, Mail Code SE–5J, U.S. EPA, Region 5, 77 West Jackson Blvd., Chicago, Illinois 60604.

FOR FURTHER INFORMATION CONTACT: Thomas Turner, Office of Regional Counsel, Mail Code C–14J, U.S. Environmental Protection Agency, Region 5, 77 West Jackson Blvd., Chicago, Illinois 60604 or call (312) 886–6613.

SUPPLEMENTARY INFORMATION: As to the Settling Party: Richard M. Taubman, Esq., Taubman, Nadis & Neuman, P.C., 32255 Northwestern Highway, Suite 200, Farmington Hills, MI 48334–1574.

Dated: October 29, 2007.

Matthew Mankowski,

Acting Director, Superfund Division.

[FR Doc. E7–22757 Filed 11–20–07; 8:45 am]

BILLING CODE 6560–50–P

EXPORT-IMPORT BANK OF THE UNITED STATES

Sunshine Act Meeting

AGENCY: Export-Import Bank of the United States.

ACTION: Cancellation of a Government in the Sunshine Act Meeting.

Original Time and Place: Tuesday, November 20, 2007 at 9:30 a.m.

Place: Room 1132, 811 Vermont Avenue, NW., Washington, DC 20571.

The Export-Import Bank of the United States has cancelled the Government in the Sunshine Act meeting which was scheduled for November 20, 2007. The Bank will reschedule this meeting at a future date. Earlier announcement of this cancellation was not possible.

FOR FURTHER INFORMATION CONTACT: Office of the Secretary, 811 Vermont Avenue, NW., Washington, DC 20571 (Tel. No. 202–565–3957).

Howard A. Schweitzer,

General Counsel.

[FR Doc. 07–5806 Filed 11–19–07; 2:49 pm]

BILLING CODE 6690–01–M

FEDERAL DEPOSIT INSURANCE CORPORATION

Deposit Insurance Assessments—2008 Designated Reserve Ratio

AGENCY: Federal Deposit Insurance Corporation (FDIC).

ACTION: Notice.

At a meeting on November 5, 2007, pursuant to provisions in the Federal Deposit Insurance Act, the Board of Directors of the FDIC (Board) set the 2008 designated reserve ratio (DRR) for the Deposit Insurance Fund (DIF) at 1.25% of estimated insured deposits.[1] The 2008 DRR of 1.25% is unchanged from the 2007 DRR.[2] The Board is publishing this notice as required by section 7(b)(3)(A)(i) of the Federal Deposit Insurance Act (12 U.S.C. 1817(b)(3)(A)(i)).[3]

The following is the link to the staff memorandum on which the Board acted when setting the DIF 2008 DRR: *http://www.fdic.gov/news/board/07memo4nov5.pdf*

FOR FURTHER INFORMATION CONTACT: Munsell W. St. Clair, Senior Policy Analyst, Division of Insurance and Research, (202) 898–8967; or Joseph A. DiNuzzo, Counsel, Legal Division, (202) 898–7349.

[1] Section 7(b)(3)(C) of the FDI Act provides that, in setting the DRR for any year, the Board must: ''(i) Take into account the risk of losses to the Deposit Insurance Fund in such year and future years, including historic experience and potential and estimated losses from insured depository institutions; (ii) take into account economic conditions generally affecting insured depository institutions so as to allow the designated reserve ratio to increase during more favorable economic conditions and to decrease during less favorable economic conditions, notwithstanding the increased risks of loss that may exist during such less favorable conditions, as determined to be appropriate by the Board of Directors; (iii) seek to prevent sharp swings in the assessment rates for insured depository institutions; and (iv) take into account such other factors as the Board of Directors may determine to be appropriate, consistent with the requirements of this subparagraph.'' 12 U.S.C. 1817(b)(3)(C).

[2] The DRR is indicated in section 327.4(g) of the FDIC's regulations. 12 CFR 327.4(g). There is no need to amend this provision because, as noted, the DRR for 2008 is the same as the current DRR.

[3] The applicable provision of the FDI Act requires notice-and-comment rulemaking only when the Board changes the DRR. 12 U.S.C. 1817(b)(3)(A)(ii).

Dated at Washington, DC, this 5th day of November, 2007.

By order of the Board of Directors.

Federal Deposit Insurance Corporation.

Valerie J. Best,

Assistant Executive Secretary.

[FR Doc. E7–22576 Filed 11–20–07; 8:45 am]

BILLING CODE 6714–01–P

FEDERAL MARITIME COMMISSION

Notice of Agreements Filed

The Commission hereby gives notice of the filing of the following agreements under the Shipping Act of 1984. Interested parties may submit comments on agreements to the Secretary, Federal Maritime Commission, Washington, DC 20573, within ten days of the date this notice appears in the **Federal Register**. Copies of agreements are available through the Commission's Office of Agreements (202–523–5793 or *tradeanalysis@fmc.gov*).

Agreement No.: 011654–018.

Title: The Middle East Indian Subcontinent Discussion Agreement.

Parties: A.P. Moller-Maersk A/S; CMA CGM S.A.; Emirates Shipping Line FZE; Hapag-Lloyd AG; National Shipping Company of Saudi Arabia; Shipping Corporation of India Ltd.; Swire Shipping Limited; United Arab Shipping Company (S.A.G.); and Zim Integrated Shipping Services, Ltd.

Filing Party: Wayne R. Rohde, Esq.; Sher & Blackwell LLP; 1850 M Street, NW.; Suite 900; Washington, DC 20036.

Synopsis: The amendment deletes MacAndrews & Company Limited as a party to the agreement.

Agreement No.: 201062–002.

Title: Lease and Operating Agreement between PRPA and Penn City Investments, Inc..

Parties: Penn City Investments, Inc.; and Philadelphia Regional Port Authority.

Filing Party: Paul D. Coleman, Esq.; Hoppel, Mayer & Coleman; 1000 Connecticut Avenue, NW.; Washington, DC 20036.

Synopsis: The amendment expands the leased area and settles a disputed rent.

Dated: November 16, 2007.

By Order of the Federal Maritime Commission.

Karen V. Gregory,

Assistant Secretary.

[FR Doc. E7–22775 Filed 11–20–07; 8:45 am]

BILLING CODE 6730–01–P

FEDERAL MARITIME COMMISSION

Ocean Transportation Intermediary License Applicants

Notice is hereby given that the following applicants have filed with the Federal Maritime Commission an application for license as a Non-Vessel Operating Common Carrier and Ocean Freight Forwarder—Ocean Transportation Intermediary pursuant to section 19 of the Shipping Act of 1984 as amended (46 U.S.C. Chapter 409 and 46 CFR part 515).

Persons knowing of any reason why the following applicants should not receive a license are requested to contact the Office of Transportation Intermediaries, Federal Maritime Commission, Washington, DC 20573.

Non-Vessel Operating Common Carrier Ocean Transportation Intermediary Applicants

Continental Van Lines, Inc., dba Continental International 4501 West Marginal Way SW., Seattle, WA 98124, Officers: John G. Blaine, President, (Qualifying Individual), Virginia M. Blaine, Vice President

Fusion Freight, Inc., 8181 NW. 36 Street, Doral, FL 33166, Officer: Luis A. Nunez, President (Qualifying Individual)

Non-Vessel Operating Common Carrier and Ocean Freight Forwarder Transportation Intermediary Applicants

SPI International Transportation (U.S.A.) Corp., dba SPI International Transportation, 41661 Enterprises Circle North, Temccula, CA 92590, Officers: Steven P. Rubin, Dir. U.S. Opera., (Qualifying Individual), James L. Taggart, Treasurer

International TLC, 11508 SE. 189th Ln., Renton, WA 98055, Aleksandr Barvinenko, Sole Proprietor

Baltic Auto Shipping Inc., 1923 N. Broadway Street, Crest Hill, IL 60435, Officer: Andrejus Presiniakovas, President, (Qualifying Individual)

Cargo Logistics & Trade Solutions, LLC, 13355 NW 4th Street, Opa-Locka, FL 33054, Officer: Michael L. DeBartolo, Managing Member, (Qualifying Individual)

Independent Freight International LLC, 2244 Landmeier Road, Elk Grove Village, IL 60007, Officers: Craig A. Giever, Exec. Vice President, (Qualifying Individual), Stewart M. Brown, President

Ocean Freight Forwarder—Ocean Transportation Intermediary Applicants

Quality Recycling Services, Inc., 5559 Timmons Ave., Memphis, TN 38119, Officers: Linda C. Bone, Secretary, (Qualifying Individual), Frederick H. Bone, President

Max Intertrade Inc., 20085 NE. 3rd Court, North Miami, FL 33179, Officer: Maite R. Blanco, President, (Qualifying Individual)

Dated: November 16, 2007.

Karen V. Gregory,

Assistant Secretary.

[FR Doc. E7–22783 Filed 11–20–07; 8:45 am]

BILLING CODE 6730–01–P

FEDERAL MARITIME COMMISSION

Ocean Transportation Intermediary License Revocation

The Federal Maritime Commission hereby gives notice that the following Ocean Transportation Intermediary license has been revoked pursuant to section 19 of the Shipping Act of 1984 (46 U.S.C. Chapter 409) and the regulations of the Commission pertaining to the licensing of Ocean Transportation Intermediaries, 46 CFR Part 515, effective on the corresponding date shown below:

License Number: 003718F.

Name: Sunship International, Inc.

Address: 6815 West 95th St., Ste. 1NE, Oak Lawn, IL 60453.

Date Revoked: October 31, 2007.

Reason: Failed to maintain a valid bond.

Sandra L. Kusumoto,

Director, Bureau of Certification and Licensing.

[FR Doc. E7–22784 Filed 11–20–07; 8:45 am]

BILLING CODE 6730–01–P

FEDERAL RESERVE SYSTEM

Formations of, Acquisitions by, and Mergers of Bank Holding Companies

The companies listed in this notice have applied to the Board for approval, pursuant to the Bank Holding Company Act of 1956 (12 U.S.C. 1841 *et seq.*) (BHC Act), Regulation Y (12 CFR Part 225), and all other applicable statutes and regulations to become a bank holding company and/or to acquire the assets or the ownership of, control of, or the power to vote shares of a bank or bank holding company and all of the banks and nonbanking companies owned by the bank holding company, including the companies listed below.

The applications listed below, as well as other related filings required by the Board, are available for immediate inspection at the Federal Reserve Bank indicated. The application also will be available for inspection at the offices of the Board of Governors. Interested persons may express their views in writing on the standards enumerated in the BHC Act (12 U.S.C. 1842(c)). If the proposal also involves the acquisition of a nonbanking company, the review also includes whether the acquisition of the nonbanking company complies with the standards in section 4 of the BHC Act (12 U.S.C. 1843). Unless otherwise noted, nonbanking activities will be conducted throughout the United States. Additional information on all bank holding companies may be obtained from the National Information Center website at *www.ffiec.gov/nic/*.

Unless otherwise noted, comments regarding each of these applications must be received at the Reserve Bank indicated or the offices of the Board of Governors not later than December 17, 2007.

A. Federal Reserve Bank of Kansas City (Todd Offenbacker, Assistant Vice President) 925 Grand Avenue, Kansas City, Missouri 64198–0001:

1. Harker Investments, LLLP, Denver, Colorado; to become a bank holding company by acquiring 100 percent of the voting shares of The Kit Carson Insurance Agency, Inc., and thereby acquire Kit Carson State Bank, both in Kit Carson, Colorado.

In connection with this application, Applicant also has applied to engage in selling credit life insurance, pursuant to section 225.28(b)(11)(i) of Regulation Y.

B. Federal Reserve Bank of San Francisco (Tracy Basinger, Director, Regional and Community Bank Group) 101 Market Street, San Francisco, California 94105–1579:

1. RiverBank Holding Company; to become a bank holding company by acquiring 100 percent of the voting shares of RiverBank, both of Spokane, Washington.

Board of Governors of the Federal Reserve System, November 16, 2007.

Robert deV. Frierson,

Deputy Secretary of the Board.

[FR Doc.E7–22735 Filed 11–20–07; 8:45 am]

BILLING CODE 6210–01–S

DEPARTMENT OF HEALTH AND HUMAN SERVICES

Office of the National Coordinator for Health Information Technology; American Health Information Community Meeting

ACTION: Announcement of meeting.

SUMMARY: This notice announces the 18th meeting of the American Health Information Community in accordance with the Federal Advisory Committee Act (Pub. L. No. 92–463, 5 U.S.C., App.) The American Health Information Community will advise the Secretary and recommend specific actions to achieve a common interoperability framework for health information technology (IT).

DATES: November 28, 2007, time to be determined. Check Web site for further information for dialing into meeting for public comment.

ADDRESSES: This will be a conference call meeting only. Public comment will be taken at the conclusion of the meeting.

FOR FURTHER INFORMATION CONTACT: For further information, visit *http://www.hhs.gov/healthit/ahic.html.*

SUPPLEMENTARY INFORMATION: This special meeting has been called to discuss a recommendation to the Community from its Electronic Health Records Workgroup (EHR WG) on the Centers for Medicare and Medicaid Services' (CMS) authority to require e-prescribing.

Dated: November 15, 2007.

Judith Sparrow,

Director, American Health Information Community, Office of Programs and Coordination, Office of the National Coordinator for Health Information Technology.

[FR Doc. 07–5791 Filed 11–16–07; 4:11 pm]

BILLING CODE 4150–24–P

DEPARTMENT OF HEALTH AND HUMAN SERVICES

Centers for Disease Control and Prevention

[30 Day–07–0666]

Agency Forms Undergoing Paperwork Reduction Act Review

The Centers for Disease Control and Prevention (CDC) publishes a list of information collection requests under review by the Office of Management and Budget (OMB) in compliance with the Paperwork Reduction Act (44 U.S.C. Chapter 35). To request a copy of these requests, call the CDC Reports Clearance Officer at (404) 639–5960 or send an e-mail to *omb@cdc.gov.* Send written comments to CDC Desk Officer, Office of Management and Budget, Washington, DC or by fax to (202) 395–6974. Written comments should be received within 30 days of this notice.

Proposed Project

National Healthcare Safety Network (OMB Control No. 0920–0666)—Revision—National Center for Preparedness, Detection and Control of Infectious Diseases (NCPDCID), Centers for Disease Control and Prevention (CDC).

Background and Brief Description

The National Healthcare Safety Network (NHSN) is a system designed to accumulate, exchange, and integrate relevant information and resources among private and public stakeholders to support local and national efforts to protect patients and to promote healthcare safety. Specifically, the data is used to determine the magnitude of various healthcare-associated adverse events and trends in the rates of these events among patients and healthcare workers with similar risks. The data will be used to detect changes in the epidemiology of adverse events resulting from new and current medical therapies and changing risks.

Healthcare institutions that participate in NHSN voluntarily report their data to CDC using a web browser-based technology for data entry and data management. Data are collected by trained surveillance personnel using written standardized protocols. This application to OMB includes a significant increase in the number of burden hours to the previously approved data collection. The increase is due to inclusion of new forms and an increased number of respondents.

NHSN was first approved by OMB in 2005 and CDC proposes to revise this data collection by adding new modules to the NHSN as well as modifying currently approved forms. Four new forms are proposed: (1) Healthcare Worker Influenza Vaccination form; (2) Healthcare Worker Influenza Antiviral Medication Administration form; (3) Pre-season survey on Influenza Vaccination Programs for Healthcare Workers; and (4) Post-season Survey on Influenza Vaccination Programs for Healthcare Workers. The purpose of these new forms is to help participating healthcare institutions and CDC to: (1) Monitor influenza vaccination coverage among healthcare personnel at individual facilities and to provide aggregate coverage estimates for all

participating facilities; (2) monitor progress towards attaining the Healthy People 2010 goal of 60% vaccination coverage among healthcare personnel; (3) monitor influenza vaccination coverage by ward/unit of the facility or occupational group so that areas or groups with low vaccination rates can be targeted for interventions; (4) monitor adverse reactions related to receipt of the vaccine or receipt of antiviral medications; and (5) assess the characteristics of influenza vaccination programs pre- and post-influenza season to identify practices associated with high immunization rates.

CDC is proposing to add an additional form, Central Line Insertion Practices Monitoring Form, to the Patient Safety Component Device Associated Module. This new form will enable participating facilities and CDC to (1) monitor central line insertion practices in individual patient care units and facilities and provide aggregate data for all participating facilities (facilities have the option of recording inserter-specific adherence data); (2) link gaps in recommended practice with the clinical outcome both in individual facilities and for all participating facilities; (3) facilitate quality improvement by identifying specific gaps in adherence to recommended prevention practices, thereby helping to target intervention strategies for reducing central line infection rates.

CDC proposes to add the Multi-Drug Resistant Organism (MDRO) Prevention Process Monitoring Module to the Patient Safety Component. This module consists of four forms: (1) MDRO Prevention Process Monitoring Form; (2) MDRO Infection Event Form; (3) Laboratory-identified MDRO Event Form; and (4) Laboratory-identified MDRO Event Summary Form. The purpose of these forms is to: (1) Monitor processes and practices in individual patient care units and facilities and to provide aggregate adherence data for all participating facilities; (2) link gaps in recommended practice with the clinical outcome (i.e., MDRO infection) both in individual facilities and for all participating facilities; (3) facilitate quality improvement by identifying specific gaps in adherence to recommended prevention practices, thereby helping to target intervention strategies for reducing MDRO infection rates.

The fourth new proposed collection to the NHSN is the High Risk Inpatient Influenza Vaccination Module. This module consists of five forms: (1) Influenza High Risk Inpatient Influenza Vaccine Summary Form—Method A; (2) Influenza High Risk Inpatient Influenza Vaccine Summary Form—Numerator Data Form Method B; (3) Influenza High Risk Inpatient Influenza Vaccine Summary Form—Method B; (4) Influenza High Risk Inpatient Influenza Vaccine—Denominator Form Method B; and (5) High Risk Inpatient Influenza Vaccination Standing Orders Form. The last form is an optional form that may be used in NHSN, but is not required as part of the High Risk Patient Influenza Vaccination module. The purpose of these forms is to: (1) Monitor influenza vaccination practices for high risk patients and provide aggregate data in regard to the number of high risk patients receiving vaccination, those already vaccinated, and those who decline due to medical contraindications or other reasons; and (2) to identify reasons that high risk patients are not receiving influenza vaccination.

CDC is also proposing to open enrollment to any healthcare facility; therefore this submission includes a registration form (Registration Form) to collect necessary registration information.

Finally, CDC also proposes to make minor edits and modifications to currently approved forms. The NHSN is currently approved for 65,817 hours for these forms.

CDC is also adding an increased number of participating healthcare institutions from a wide spectrum of settings. Part of this increase in burden hours is due to the passage of legislation in many states requiring mandatory reporting of healthcare-associated infections. Some states plan to use are or using NHSN as their data collection system to meet this mandate.

Participating institutions must have a computer capable of supporting an Internet service provider (ISP) and access to an ISP. The only other cost to respondents is their time to complete the appropriate forms.

The National Healthcare Safety Network is currently approved for 65,817 burden hours. This revision is seeking an increase of 1,212,498 burden hours The total estimated annualized burden hours are 1,278,315.

ESTIMATE OF ANNUALIZED BURDEN HOURS

Form	No. of respondents	Average no. of responses per respondent	Average burden per response (in hours)
A. Patient Safety Monthly Reporting Plan	1,500	9	35/60
AA. Healthcare Worker Survey	150	100	10/60
B. Healthcare Personnel Safety Reporting Plan	150	9	10/60
BB. Dialysis Survey	80	1	1
CC. List of Blood Isolates+	1,500	1	1
D. Primary Bloodstream Infection (BSI)**	1,500	36	30/60
DD. Manual Categorization of Positive Blood Cultures+	1,500	1	1
E. Dialysis Event	80	200	15/60
FF. Healthcare Worker Influenza Vaccination	150	500	10/60
G. Pneumonia (PNEU) (Includes decision algorithms: Ga. Any Patient—Pneumonia Flow Diagram Gb. Infant and Children—Pneumonia Flow Diagram)	1,500	72	30/60
GG. Healthcare Worker Influenza Antiviral Medication Administration	150	50	10/60
H. Urinary Tract Infection (UTI)	1,500	27	30/60
HH. Preseason Survey on Influenza Vaccination Programs for Healthcare Personnel	150	1	10/60
II. Postseason Survey on Influenza Vaccination Programs for Healthcare Personnel	150	1	10/60
J. Denominators for Neonatal Intensive Care Units (NICU)	1,500	9	4
JJ. Central Line Insertion Practices Adherence Monitoring Form	1,500	100	5/60
K. Denominators for Specialty Care Area (SCA)	1,500	9	5
KK. Laboratory Testing	150	100	15/60
L. Denominators for Intensive Care Units (ICU)/Other locations (not NICU or SCA)	1,500	18	5

ESTIMATE OF ANNUALIZED BURDEN HOURS—Continued

Form	No. of respondents	Average no. of responses per respondent	Average burden per response (in hours)
LL. Multi-drug Resistant Organism (MDRO) Prevention Process and Outcome Measures Monthly Monitoring Form	1,500	24	10/60
M. Denominator for Outpatient Dialysis	80	9	5/60
MM. MDRO Infection Form	1,500	72	30/60
N. Surgical Site Infection (SSI)	1,500	27	30/60
NN. Laboratory-identified MDRO Event	1,500	240	30/60
O. Denominator for procedure	1,500	540	8/60
OO. NHSN Registration Form	1,500	1	5/60
P. Antimicrobial Use and Resistance (AUR)—Microbiology Laboratory Data**	1,500	45	3
PP. High Risk Inpatient Influenza Vaccination Monthly Monitoring Form—Method A	1,500	5	16
Q. Antimicrobial Use and Resistance (AUR)—Pharmacy Data**	1,500	36	2
QQ. High Risk Inpatient Influenza Vaccination Numerator Data Form—Method B	500	250	10/60
R. Facility Contact Information	1,500	1	10/60
RR. High Risk Inpatient Influenza Vaccination Monthly Monitoring Form—Method B	500	5	4
S. Patient Safety Component Annual Facility Survey	1,500	1	30/60
SS. High Risk Inpatient Influenza Vaccination Denominator Data Form—Method B	500	250	5/60
T. Agreement to Participate and Consent	1,500	1	15/60
TT. Laboratory-identified MDRO Event Summary Form	1,500	3	1
U. Group Contact Information	1,500	1	5/60
V. Exposure to Blood/Body Fluids	150	50	1
W. Healthcare Worker Post-exposure Prophylaxis	150	10	15/60
X. Healthcare Worker Demographic Data	150	200	20/60
Y. Healthcare Worker Vaccination History	150	300	10/60
Z. Implementation of Engineering (safety device) Controls for Sharps Injury Prevention	150	1	30/60
Za. Healthcare Personnel Safety Component Facility Survey	150	1	8

** Burden will be eliminated when reporting these data once an NHSN institution implements electronic data capture.
+ Burden during validation phase only, then eliminated.

Dated: November 14, 2007.

Maryam I. Daneshvar,

Acting Reports Clearance Officer, Centers for Disease Control and Prevention.

[FR Doc. E7–22731 Filed 11–20–07; 8:45 am]

BILLING CODE 4163–18–P

DEPARTMENT OF HEALTH AND HUMAN SERVICES

Centers for Disease Control and Prevention

Advisory Committee on Childhood Lead Poisoning Prevention: Notice of Charter Renewal

This gives notice under the Federal Advisory Committee Act (Pub. L. 92–463) of October 6, 1972, that the Advisory Committee on Childhood Lead Poisoning Prevention, Centers for Disease Control and Prevention of the Department of Health and Human Services, has been renewed for a 2-year period extending through October 31, 2009.

For further information, contact Mary Jean Brown, R.N., Sc.D., Executive Secretary, Advisory Committee on Childhood Lead Poisoning Prevention, Centers for Disease Control and Prevention of the Department of Health and Human Services, 4470 Buford Highway, M/S F40, Atlanta, Georgia 30341, telephone 770/488–7492 or fax 770–488–3635.

The Director, Management Analysis and Services Office, has been delegated the authority to sign **Federal Register** notices pertaining to announcements of meetings and other committee management activities, for both the Centers for Disease Control and Prevention and the Agency for Toxic Substances and Disease Registry.

Dated: November 14, 2007.

Elaine L. Baker,

Director, Management Analysis and Services Office, Centers for Disease Control and Prevention.

[FR Doc. E7–22722 Filed 11–20–07; 8:45 am]

BILLING CODE 4163–18–P

DEPARTMENT OF HEALTH AND HUMAN SERVICES

Centers for Disease Control and Prevention

Board of Scientific Counselors, Coordinating Center for Infectious Diseases: Notice of Charter Renewal

This gives notice under the Federal Advisory Committee Act (Pub. L. 92–463) of October 6, 1972, that the Board of Scientific Counselors, Coordinating Center for Infectious Diseases, Centers for Disease Control and Prevention, Department of Health and Human Services, has been renewed for a 2-year period through October 31, 2009.

For information, contact Janet Nicholson, Ph.D., Executive Secretary, Board of Scientific Counselors, Coordinating Center for Infectious Diseases, Centers for Disease Control and Prevention, Department of Health and Human Services, 1600 Clifton Road, NE., Mailstop D10, Atlanta, Georgia 30333, telephone 404/639–2100 or fax 404/639–2170.

The Director, Management Analysis and Services Office, has been delegated the authority to sign **Federal Register** notices pertaining to announcements of meetings and other committee management activities, for both the Centers for Disease Control and Prevention and the Agency for Toxic Substances and Disease Registry.

Dated: November 14, 2007.

Elaine L. Baker,

Director, Management Analysis and Services Office, Centers for Disease Control and Prevention.

[FR Doc. E7–22772 Filed 11–20–07; 8:45 am]

BILLING CODE 4163–18–P

DEPARTMENT OF HEALTH AND HUMAN SERVICES

Centers for Medicare & Medicaid Services

[CMS–5045–N2]

Medicare Program: Medicare Clinical Laboratory Services Competitive Bidding Demonstration Project

AGENCY: Centers for Medicare & Medicaid Services (CMS), HHS.

ACTION: Notice.

SUMMARY: This notice announces the new date for the Bidder's Conference for the Medicare Clinical Laboratory Services Competitive Bidding Demonstration project.

FOR FURTHER INFORMATION CONTACT: Linda Lebovic at (410) 786–3402 or *lab_bid_ demo@cms.hhs.gov*. Interested parties can obtain information about the demonstration project on the CMS Web site at *http://www.cms.hhs.gov/DemoProjectsEvalRpts/downloads/2004_Demonstration_Competitive_Bidding_Clinical_Laboratory_Services.pdf.*

SUPPLEMENTARY INFORMATION:

I. Background

On October 17, 2007, we published a notice in the **Federal Register** (72 FR 58856) announcing the first demonstration site for the Medicare Clinical Laboratory Services Competitive Bidding Demonstration Project and the date for the Bidder's Conference. The Bidder's Conference was to be held on October 31, 2007, in the San Diego-Carlsbad-San Marcos, California Metropolitan Statistical Area (MSA). Due to the State of Emergency related to fires in the State of California, we postponed the conference.

II. Provisions of the Notice

This notice announces the new date for the Bidder's Conference. The Bidder's Conference is scheduled for December 5, 2007 in the San Diego-Carlsbad-San Marcos, California MSA. We refer readers to the October 17, 2007 published notice (72 FR 58856) for information regarding the Clinical Laboratory Services Competitive Bidding Demonstration Project.

Authority: Section 302(b) of the Medicare Prescription Drug, Improvement, and Modernization Act of 2003 (MMA).

(Catalog of Federal Domestic Assistance Program No. 93.773 Medicare—Hospital Insurance Program; and No. 93.774, Medicare—Supplementary Medical Insurance Program).

Dated: November 16, 2007.

Kerry Weems,

Acting Administrator, Centers for Medicare & Medicaid Services.

[FR Doc. E7–22774 Filed 11–20–07; 8:45 am]

BILLING CODE 4120–01–P

DEPARTMENT OF HOMELAND SECURITY

[Docket No. DHS–2007–0079]

The National Infrastructure Advisory Council

AGENCY: Directorate for National Protection and Programs, Department of Homeland Security.

ACTION: Committee Management; Notice of Federal Advisory Council Meeting.

SUMMARY: The National Infrastructure Advisory Council will meet on January 8, 2008 in Washington, DC. The meeting will be open to the public.

DATES: The National Infrastructure Advisory Council will meet Tuesday, January 8, 2008 from 1:30 p.m. to 4:30 p.m. Please note that the meeting may close early if the committee has completed its business. The time of the meeting is also subject to change. For the most current information, please consult the NIAC Web site, http://*www.dhs.gov/niac*, or contact Mark Baird by phone at 703–235–2888 or by e-mail at *mark.baird@associates.dhs.gov*.

ADDRESSES: The meeting will be held at the National Press Club, 529 14th Street, NW., Washington, DC 20045. While we will be unable to accommodate oral comments from the public, written comments may be sent to Nancy Wong, Department of Homeland Security, Directorate for National Protection and Programs, Washington, DC 20528. Written comments should reach the contact person listed below by December 8, 2007. Comments must be identified by DHS–2007–0079 and may be submitted by *one* of the following methods:

- *Federal eRulemaking Portal*: *http://www.regulations.gov*. Follow the instructions for submitting comments.
- *E-mail*: *mark.baird@associates.dhs.gov*. Include the docket number in the subject line of the message.
- *Fax*: 703–235–3055.
- *Mail*: Nancy Wong, Department of Homeland Security, Directorate for National Protection and Programs, Washington, DC 20528.

Instructions: All submissions received must include the words ''Department of Homeland Security'' and the docket number for this action. Comments received will be posted without alteration at *http://www.regulations.gov*, including any personal information provided.

Docket: For access to the docket to read background documents or comments received by the National Infrastructure Advisory Council, go to *http://www.regulations.gov*.

FOR FURTHER INFORMATION CONTACT: Nancy Wong, NIAC Designated Federal Officer, Department of Homeland Security, Washington, DC 20528; telephone 703–235–2888.

SUPPLEMENTARY INFORMATION: Notice of this meeting is given under the Federal Advisory Committee Act, 5 U.S.C. App. (Pub. L. 92–463). The National Infrastructure Advisory Council shall provide the President through the Secretary of Homeland Security with advice on the security of the critical infrastructure sectors and their information systems.

The National Infrastructure Advisory Council will meet to address issues relevant to the protection of critical infrastructure as directed by the President. The January 8, 2008 meeting will also include final deliberations from two Working Groups: (1) Chemical, Biological, and Radiological Events and Critical Infrastructure Workforce; and (2) The Insider Threat to Critical Infrastructures.

Procedural

While this meeting is open to the public, participation in The National Infrastructure Advisory Council deliberations is limited to committee members, Department of Homeland Security officials, and persons invited to attend the meeting for special presentations.

Information on Services for Individuals With Disabilities

For information on facilities or services for individuals with disabilities or to request special assistance at the meeting, contact the NIAC Secretariat at 703–235–2888 as soon as possible.

Dated: November 8, 2007.

Nancy Wong,

Designated Federal Officer for the NIAC.

[FR Doc. E7–22693 Filed 11–20–07; 8:45 am]

BILLING CODE 4410–10–P

DEPARTMENT OF HOMELAND SECURITY

Coast Guard

[Docket No. COTP Houston-Galveston 07–022]

Area Maritime Security Committee, Houston-Galveston, TX; Vacancies

AGENCY: Coast Guard, DHS.

ACTION: Request for applications.

SUMMARY: The Coast Guard seeks applications for membership in the Area Maritime Security Committee, Houston-Galveston, Texas. The Committee assists the Captain of the Port, Houston-Galveston, Texas in developing, reviewing, and updating the Area Maritime Security Plan for their area of responsibility.

DATES: Requests for membership should reach the Captain of the Port, Houston-Galveston on or before December 21, 2007.

ADDRESSES: Submit applications for membership to the Captain of the Port, Houston-Galveston, AMSC Executive Administrator, 9640 Clinton Drive, Houston TX 77029 or by e-mail to *John.D.Walker@uscg.mil.*

FOR FURTHER INFORMATION CONTACT: For questions about the Houston-Galveston AMS Committee or its charter, contact Mr. John Walker, AMSC Executive Administrator, at (713) 671–5118.

SUPPLEMENTARY INFORMATION:

The Committee

The Area Maritime Security Committee, Houston-Galveston, Texas (the Committee), is established under, and governed by, 33 CFR part 103, subpart C. The functions of the Committee include, but are not limited to, the following:

(1) Identifying critical port infrastructure and operations.

(2) Identifying risks (i.e., threats, vulnerabilities, and consequences).

(3) Determining strategies and implementation methods for mitigation.

(4) Developing and describing the process for continuously evaluating overall port security by considering consequences and vulnerabilities, how they may change over time, and what additional mitigation strategies can be applied.

(5) Advising and assisting the Captain of the Port in developing, reviewing, and updating the Area Maritime Security Plan under 33 CFR part 103, subpart E.

The Houston-Galveston AMS Committee meets quarterly. Subcommittees, work groups and task forces convene between meetings of the parent committee. AMS Committee meeting location is currently at the Port of Houston Authority, 111 East Loop North, Houston, TX at 9 a.m.

Positions Available on the Committee

There are twenty (27) vacancies on the Committee. Members may be selected from:

(1) The Federal, Territorial, or Tribal government;

(2) The State government and political subdivisions of the State;

(3) Local public safety, crisis management, and emergency response agencies;

(4) Law enforcement and security organizations;

(5) Maritime industry, including labor;

(6) Other port stakeholders having a special competence in maritime security; and

(7) Port stakeholders affected by security practices and policies.

In support of the Coast Guard's policy on gender and ethnic diversity, we encourage qualified women and members of minority groups to apply.

Qualification of Members

Members should possess at least five (5) years of experience related to maritime or port security operations. Applicants may be required to pass an appropriate security background check before appointment to the Committee.

The terms of office for each vacancy is five (5) years. However, a member may serve one additional term of office. Members are not salaried or otherwise compensated for their service on the Committee.

The Houston-Galveston AMS Committee is currently requesting applications to fill the following vacancies:

(1) Channel Industries Mutual Aid—Primary and Alternate;

(2) Cruise Lines—Primary and Alternate;

(3) Educational Institutions—Alternate;

(4) Fleets—Alternate;

(5) Freeport Pilots Assoc—Alternate;

(6) Freeport Port Security—Primary and Alternate;

(7) Galveston County—Alternate;

(8) Galveston/Texas City Pilots Assoc—Primary and Alternate;

(9) Greater Houston Port Bureau—Primary;

(10) Gulf Intracoastal Canal Assoc—Alternate;

(11) Harbor Tugs—Alternate;

(12) Houston Port Police—Primary and Alternate;

(13) Offshore Carriers/Area—Alternate;

(14) Offshore Suppliers—Alternate;

(15) Port Rail—Alternate;

(16) Recreational Boaters—Alternate;

(17) Shipping Agents—Primary and Alternate;

(18) Texas City Port Police—Primary and Alternate;

(19) Trucking Industry—Alternate; and

(20) Waterborne Venders—Alternate.

Format of Applications

Applications for membership may be in any format. However, because members must demonstrate an interest in the security of the area covered by the Committee, we particularly encourage the submission of information highlighting experience in maritime or security matters.

Authority: Section 102 of the Maritime Transportation Security Act of 2002 (Pub. L. 107–295)(the Act) authorizes the Secretary of the Department in which the Coast Guard is operating to establish Area Maritime Security Committees for any port area of the United States. See 33 U.S.C. 1226; 46 U.S.C. 70112(a)(2); 33 CFR 103.205; Department of Homeland Security Delegation No. 0170.1. The Act exempts Area Maritime Security Committees from the Federal Advisory Committee Act (FACA), 5 U.S.C. App. (Pub. L. 92–463).

Dated: November 6, 2007.

William J. Diehl,

Captain, U.S. Coast Guard, Federal Maritime Security Coordinator/Captain of the Port, Houston-Galveston.

[FR Doc. E7–22787 Filed 11–20–07; 8:45 am]

BILLING CODE 4910–15–P

DEPARTMENT OF HOMELAND SECURITY

Coast Guard

[Docket No. CGD08–07–045]

Area Maritime Security Committee, Louisville; Vacancies

AGENCY: Coast Guard, DHS.

ACTION: Solicitation for Membership.

SUMMARY: The Coast Guard seeks applications for membership in the Louisville Area Maritime Security Committee. The Louisville AMSC area of responsibility includes all facilities and Maritime Transportation Security (MTS) infrastructure adjacent to the waterfront on the Ohio River from the Markland Locks and Dam to the Cannelton Locks and Dam (mile marker 531.5 to 720.6) and all of the Kentucky River.

DATES: Requests for membership should reach the Captain of the Port, Ohio Valley, by December 3, 2007.

ADDRESSES: Applications for membership should be submitted to the COTP/FMSC at the following address: USCG Sector Ohio Valley, Mazzoli Federal Building, 600 Martin Luther King Place, Room 409D, Louisville, KY 40202–2242.

FOR FURTHER INFORMATION CONTACT: For questions about submitting an application or about the AMS Committee in general, contact LT Wayne Reed at 502–779–5432.

SUPPLEMENTARY INFORMATION:

The Committee

The Area Maritime Security Committee, Louisville (the Committee), is established under, and governed by, 33 CFR part 103, subpart C. The functions of the Committee include, but are not limited to, the following:

(1) Identifying critical port infrastructure and operations.

(2) Identifying risks (*i.e.*, threats, vulnerabilities, and consequences).

(3) Determining strategies and implementation methods for mitigation.

(4) Developing and describing the process for continuously evaluating overall port security by considering consequences and vulnerabilities, how they may change over time, and what additional mitigation strategies can be applied.

(5) Advising and assisting the Captain of the Port in developing, reviewing, and updating the Area Maritime Security Plan under 33 CFR part 103, subpart E.

Positions Available on the Committee

There are 20 vacancies on the Committee. Members may be selected from—

(1) The Federal, Territorial, or Tribal government;

(2) The State government and political subdivisions of the State;

(3) Local public safety, crisis management, and emergency response agencies;

(4) Law enforcement and security organizations;

(5) Maritime industry, including labor;

(6) Other port stakeholders having a special competence in maritime security; and

(7) Port stakeholders affected by security practices and policies.

In support of the Coast Guard's policy on gender and ethnic diversity, we encourage qualified women and members of minority groups to apply.

Qualification of Members

Members must have at least 5 years of experience related to maritime or port security operations. Applicants may be required to pass an appropriate security background check before appointment to the Committee.

The term of office for each vacancy is 5 years. However, a member may serve one additional term of office. Members are not salaried or otherwise compensated for their service on the Committee.

Format of Applications

Applications for membership may be in any format. However, because members must demonstrate an interest in the security of the area covered by the Committee, we particularly encourage the submission of information highlighting experience in maritime or security matters.

Authority: Section 102 of the Maritime Transportation Security Act of 2002 (Pub. L. 107–295) (the Act) authorizes the Secretary of the Department in which the Coast Guard is operating to establish Area Maritime Security Committees for any port area of the United States. *See* 33 U.S.C. 1226; 46 U.S.C. 70112(a)(2); 33 CFR 103.205; Department of Homeland Security Delegation No. 0170.1. The Act exempts Area Maritime Security Committees from the Federal Advisory Committee Act (FACA), 5 U.S.C. App. (Pub. L. 92–463).

Dated: November 7, 2007.

J. H. Korn,

Captain, U.S. Coast Guard, Commander, 8th Coast Guard Dist. Acting.

[FR Doc. E7–22793 Filed 11–20–07; 8:45 am]

BILLING CODE 4910–15–P

DEPARTMENT OF HOMELAND SECURITY

Coast Guard

[Docket No. USCG–2007–28962]

Notification of the Imposition of Conditions of Entry for Certain Vessels Arriving to the United States

AGENCY: Coast Guard, DHS.

ACTION: Notice.

SUMMARY: The Coast Guard announces that effective anti-terrorism measures are not in place in certain ports of Cameroon and that it will impose conditions of entry on vessels arriving from that country.

DATES: The policy announced in this notice will become effective December 5, 2007.

ADDRESSES: This notice will be available for inspection and copying at the Docket Management Facility at the U.S. Department of Transportation, Room W12–140 on the Ground Floor of the West Building, 1200 New Jersey Avenue, SE., Washington, DC 20590, between 9 a.m. and 5 p.m., Monday through Friday, except Federal holidays. The telephone number is 202–366–9329.

FOR FURTHER INFORMATION CONTACT: If you have questions on this notice, call Mr. Michael Brown, International Port Security Evaluation Division, Coast Guard, telephone 202–372–1081. If you have questions on viewing or submitting material to the docket, call Renee V. Wright, Program Manager, Docket Operations, telephone 202–366–9826.

SUPPLEMENTARY INFORMATION:

Background and Purpose

Section 70110 of the Maritime Transportation Security Act provides that the Secretary of Homeland Security may impose conditions of entry on vessels requesting entry into the United States arriving from ports that are not maintaining effective anti-terrorism measures. The Coast Guard has been delegated the authority by the Secretary to carry out the provisions of this section. The Docket contains previous notices imposing or removing conditions of entry on vessels arriving from certain countries and those conditions of entry and the countries they pertain to remain in effect unless modified by this notice.

The Coast Guard has determined that ports, with certain exceptions, in Cameroon are not maintaining effective anti-terrorism measures. Accordingly, effective December 5, 2007. the Coast Guard will impose the following conditions of entry on vessels that visited ports in Cameroon with the exception of the Ebome Marine Terminal, the Quai GETMA (LAMNALCO Base) facility, and the Société Nationale de Raffinage (SONARA) terminal during their last five port calls. Vessels must:

- Implement measures per the ship's security plan equivalent to Security Level 2;
- Ensure that each access point to the ship is guarded and that the guards have total visibility of the exterior (both landside and waterside) of the vessel while the vessel is in ports in the above country. Guards may be provided by the ship's crew, however additional crewmembers should be placed on the ship if necessary to ensure that limits on maximum hours of work are not exceeded and/or minimum hours of rest are met, or provided by outside security forces approved by the ship's master and Company Security Officer;
- Attempt to execute a Declaration of Security;
- Log all security actions in the ship's log;

• Report actions taken to the cognizant U.S. Coast Guard Captain of the Port prior to arrival into U.S. waters; and

• Ensure that each access point to the ship is guarded by armed, private security guards and that they have total visibility of the exterior (both landside and waterside) of the vessel while in U.S. ports. The number and position of the guards has to be acceptable to the cognizant Coast Guard Sector Commander.

With this notice, the current list of countries not maintaining effective anti-terrorism measures is as follows: Cameroon, Equatorial Guinea, Guinea-Bissau, Liberia, and Mauritania.

Dated: October 25, 2007.

Rear Admiral David Pekoske, USCG,

Assistant Commandant for Operations.

[FR Doc. E7–22786 Filed 11–20–07; 8:45 am]

BILLING CODE 4910–15–P

DEPARTMENT OF HOMELAND SECURITY

Federal Emergency Management Agency

Agency Information Collection Activities: Proposed Collection; Comment Request

AGENCY: Federal Emergency Management Agency, DHS.

ACTION: Notice; 60-day notice and request for comments; collection type extension, without change, of a currently approved collection, OMB: 1660–0010, Form Number(s): No form numbers associated with this collection.

SUMMARY: The Federal Emergency Management Agency (FEMA), as part of its continuing effort to reduce paperwork and respondent burden, invites the general public and other Federal agencies to take this opportunity to comment on a proposed continuing information collection. In accordance with the Paperwork Reduction Act of 1995, this notice seeks comments concerning the information collection outlined in 44 CFR part 71, as it pertains to application for National Flood Insurance Program (NFIP) insurance for buildings located in Coastal Barrier Resource System (CBRS) communities.

SUPPLEMENTARY INFORMATION: The Coastal Barrier Resources Act (CBRA) (Pub. L. 97–3480) and the Coastal Barrier Improvement Act (CBRA) (Pub. L. 101–591) are Federal laws that were enacted on October 1, 1982, and November 16, 1990, respectively. The legislation was implemented as part of a Department of the Interior (DOI) initiative to preserve the ecological integrity of areas DOI designates as coastal barriers and otherwise protected areas. The laws provide this protection by prohibiting all Federal expenditures or financial assistance including flood insurance for residential or commercial development in areas identified with the system. When an application for flood insurance is submitted for buildings located in CBRS communities, documentation must be submitted as evidence of eligibility.

FEMA regulation 44 CFR part 71 implements the CBRA. The documentation required in 44 CFR 71.4 is provided to FEMA for a determination that a building which is located on a designated coastal barrier and for which an application for flood insurance is being made, is neither new construction or a substantial improvement, and is, therefore, eligible for NFIP coverage. If the information is not collected, NFIP policies would be provided for buildings, which are legally ineligible for it, thus exposing the Federal Government to an insurance liability Congress chose to limit.

Collection of Information

Title: Implementation of Coastal Barrier Resources Act.

Type of Information Collection: Extension of a currently approved collection.

OMB Number: 1660–0010.

Form Numbers: No forms.

Abstract: When an application for flood insurance is submitted for buildings located in CBRS communities, one of the following types of documentation must be submitted as evidence of eligibility: (a) Certification from a community official stating the building is not located in a designated CBRS area, (b) A legally valid building permit or certification from a community official stating that the building's start of construction date preceded the date that the community was identified in the system or (c) Certification from the governmental body overseeing the area indicating that the building is used in a manner consistent with the purpose for which the area is protected.

Affected Public: Individuals or households; businesses or other for profits; not-for-profit institutions; farms; Federal Government; and State, local or tribal governments.

Number of Respondents: 60.

Frequency of Response: One time.

Hours Per Response: 1.5 hours.

Estimated Total Annual Burden Hours: 90 hours.

ANNUAL BURDEN HOURS

Project/activity (survey, form(s), focus group, worksheet, etc.)	Number of respondents	Frequency of responses	Burden hours per respondent	Annual responses	Total annual burden hours
	(A)	(B)	(C)	(D) = (A × B)	(E) = (C × D)
Documentation:					
44 CFR Section 71.4	60	1	1.5	60	90
Total	60	1	1.5	60	90

Estimated Cost: $600 (60 respondents × $10 per respondent). The cost to the respondent, *i.e.*, applicant for flood insurance, is the cost if any, to obtain the required documentation from local officials. Fees charged, if any, to the applicants, are nominal, *i.e.*, the cost of photocopying the public record. Information of this type is frequently provided upon request free of charge by the community as a public service. The average cost to the respondent is estimated to be $10, the cost to make phone calls, mail a written request, or make a trip to a local office to obtain the document, and includes any copying fees, which may be charged by the local office.

Comments: Written comments are solicited to (a) evaluate whether the proposed data collection is necessary for the proper performance of the agency, including whether the information shall have practical utility; (b) evaluate the accuracy of the agency's estimate of the burden of the proposed collection of information, including the validity of

the methodology and assumptions used; (c) enhance the quality, utility, and clarity of the information to be collected; and (d) minimize the burden of the collection of information on those who are to respond, including through the use of appropriate automated, electronic, mechanical, or other technological collection techniques or other forms of information technology, *e.g.*, permitting electronic submission of responses. Comments must be submitted on or before January 22, 2008.

ADDRESSES: Interested persons should submit written comments to Chief, Records Management and Privacy, Information Resources Management Branch, Information Technology Services Division, Federal Emergency Management Agency, 500 C Street, SW., Room 609, Washington, DC 20472 (Mail Drop Room 301, 1880 S. Bell Street, Arlington, VA 22202).

FOR FURTHER INFORMATION CONTACT: Contact Robin Williamson, Risk Insurance Branch, Mitigation Division, at 703–605–0755 for additional information. You may contact the Records Management Branch for copies of the proposed collection of information at facsimile number (202) 646–3347 or e-mail address: *FEMA-Information-Collections@dhs.gov.*

Dated: November 8, 2007.

John A. Sharetts-Sullivan,

Director, Records Management Division, Office of Management, Federal Emergency Management Agency, Department of Homeland Security.

[FR Doc. E7–22711 Filed 11–20–07; 8:45 am]

BILLING CODE 9110–11–P

DEPARTMENT OF HOMELAND SECURITY

Federal Emergency Management Agency

Agency Information Collection Activities: Proposed Collection; Comment Request

AGENCY: Federal Emergency Management Agency, DHS.

ACTION: Notice; 60-day notice and request for comments; collection type extension, without change, of a currently approved collection, OMB Number: 1660–0057, Form Number(s): No forms associated with this collection.

SUMMARY: The Federal Emergency Management Agency (FEMA), as part of its continuing effort to reduce paperwork and respondent burden, invites the general public and other Federal agencies to take this opportunity to comment on a proposed revised information collection. In accordance with the Paperwork Reduction Act of 1995, this notice seeks comments concerning the need to continue to collect information from the State, local and tribal government officials, businesses, and individuals residing in the immediate and surrounding areas of chemical stockpile sites.

SUPPLEMENTARY INFORMATION: The Chemical Stockpile Emergency Preparedness Program (CSEPP) is one facet of the multi-hazard readiness program in eight U.S. states that deal with hazardous material spills or releases. The program's goal is to improve preparedness to protect the people of these communities in the unlikely event of an accident. CSEPP, a cooperative effort between FEMA and the U.S. Army, provides funding (grants), training, community outreach, guidance, technical support and expertise to State, local, and tribal governments to improve their capabilities to prepare for and respond to this type of disaster. Since no preparedness program can be successful without the public's understanding and cooperation, input from the residents and businesses of immediate and/or surrounding areas is vital for program managers' ability to design custom-tailored strategies to educate and communicate risks and action plans at the local level. This survey, which was initiated six years ago, will continue as the assessment mechanism to document and quantify program achievements. There are two authorities supporting this information collection: (1) The Government Performance Results Act of 1993 (GPRA), which mandates federal agencies to provide valid and reliable quantification of program achievements, and (2) Executive Order 12862, which requires agencies to survey customers to determine their level of satisfaction with existing services.

Collection of Information

Title: Chemical Stockpile Emergency Preparedness Program (CSEPP) Evaluation and Customer Satisfaction Survey.

Type of Information Collection: Extension of a currently approved collection.

OMB Number: OMB 1660–0057.

Form Numbers: None associated with this collection.

Abstract: Consistent with performance measurement requirements set forth by the Government Performance Results Act, the Chemical Stockpile Preparedness Program (CSEPP) will continue collecting data from state, local and tribal governments, individuals and businesses residing in the immediate or surrounding areas of eight chemical stockpile sites. This study will: (1) Assess program effectiveness using five national performance indicators unique to the CSEPP program, (2) measure and monitor customer satisfaction with CSEPP products and services, and (3) identify weaknesses and strengths of individual sites and program components. Data findings will be used to set customer service standards, while providing quantitative benchmarks for program monitoring and evaluation.

Affected Public: State and local officials; individuals; businesses.

Estimated Total Annual Burden Hours:

ANNUAL BURDEN HOURS

Project/activity (survey, form(s), focus group, etc.)	Number of respondents (A)	Frequency of responses (B)	Burden hours per respondent (C)	Annual responses (A × B)	Total annual burden hours (A × B × C)
Open-ended Questionnaire	(1) 176	1	0.25	176	44
Pilot Tests—Site Surveys	(2) 240	1	0.25	240	60
Site Surveys Questionnaires (3)—					
Anniston, AL	961	1	0.25	961	240
Blue Grass, KY	822	1	0.25	822	206
Deseret, UT	823	1	0.25	823	206
Edgewood, MD (Aberdeen)	807	1	0.25	807	202

ANNUAL BURDEN HOURS—Continued

Project/activity (survey, form(s), focus group, etc.)	Number of respondents (A)	Frequency of responses (B)	Burden hours per respondent (C)	Annual responses (A × B)	Total annual burden hours (A × B × C)
Newport, IN (Mail Survey) (5)	815	1	0.25	815	204
Pine Bluff, AR	1,093	1	0.25	1,093	273
Pueblo, CO (4)	823	1	0.25	823	206
Pueblo City	383	1	0.17	383	65
Umatilla, OR	814	1	0.25	814	204
TotaL	7,757	1		7,757	1,910

(1) State and local officials.
(2) Thirty residential and/or business respondents per pilot test in each of 8 CSEPP sites.
(3) Individual/residential respondents.
(4) Includes 86 business respondents.
(5) Mail survey will double as pilot per OMB suggestions.

Estimated Cost: There are no startup or operational/maintenance costs to respondents since there are no reporting or record keeping requirements associated with this collection. The only cost to respondents is the one incurred as a direct result of the burden hours.

Comments: Written comments are solicited to (a) evaluate whether the proposed data collection is necessary for the proper performance of the agency, including whether the information shall have practical utility; (b) evaluate the accuracy of the agency's estimate of the burden of the proposed collection of information, including the validity of the methodology and assumptions used; (c) enhance the quality, utility, and clarity of the information to be collected; and (d) minimize the burden of the collection of information on those who are to respond, including through the use of appropriate automated, electronic, mechanical, or other technological collection techniques or other forms of information technology, *e.g.*, permitting electronic submission of responses. Comments must be submitted on or before January 22, 2008.

ADDRESSES: Interested persons should submit written comments to Office of Management, Records Management Division, Federal Emergency Management Agency, 500 C Street, SW., Washington, DC 20472 (Mail Drop Room 301, 1880 S. Bell Street, Arlington, VA, 22202).

FOR FURTHER INFORMATION CONTACT: Contact Joe Herring, Program Specialist, CSEPP at (703) 605–1378 for additional information. You may contact the Records Management Branch for copies of the proposed collection of information at facsimile number (202) 646–3347 or e-mail address: *FEMA-Information-Collections@dhs.gov*.

Dated: November 7, 2007.

John A. Sharetts-Sullivan,

Director, Records Management Division Office of Management, Federal Emergency Management Agency, Department of Homeland Security.

[FR Doc. E7–22713 Filed 11–20–07; 8:45 am]

BILLING CODE 9110–21–P

DEPARTMENT OF HOMELAND SECURITY

Transportation Security Administration

[Docket Nos. TSA–2006–24191; Coast Guard–2006–24196]

Transportation Worker Identification Credential (TWIC); Enrollment Dates for the Ports of Boston, MA; Charleston, SC; Cleveland, OH; Detroit, MI; Port Fourchon, LA; and Brownsville, TX

AGENCY: Transportation Security Administration; United States Coast Guard; DHS.

ACTION: Notice.

SUMMARY: The Department of Homeland Security (DHS) through the Transportation Security Administration (TSA) issues this notice of the dates for the beginning of the initial enrollment for the Transportation Worker Identification Credential (TWIC) for the Ports of Boston, MA; Charleston, SC; Cleveland, OH; Detroit, MI; Port Fourchon, LA; and Brownsville, TX.

DATES: TWIC enrollment in Charleston, SC will begin on November 28, 2007; in Cleveland, OH; Detroit, MI; and Port Fourchon, LA on November 29, 2007; in Boston, MA on November 30, 2007; and Brownsville, TX on December 5, 2007.

ADDRESSES: You may view published documents and comments concerning the TWIC Final Rule, identified by the docket numbers of this notice, using any one of the following methods.

(1) Searching the Federal Docket Management System (FDMS) Web page at *http://www.regulations.gov*;

(2) Accessing the Government Printing Office's Web page at *http://www.gpoaccess.gov/fr/index.html*; or

(3) Visiting TSA's Security Regulations Web page at *http://www.tsa.gov* and accessing the link for ''Research Center'' at the top of the page.

FOR FURTHER INFORMATION CONTACT: James Orgill, TSA–19, Transportation Security Administration, 601 South 12th Street, Arlington, VA 22202–4220. Transportation Threat Assessment and Credentialing (TTAC), TWIC Program, (571) 227–4545; e-mail: *credentialing@dhs.gov*.

Background

The Department of Homeland Security (DHS), through the United States Coast Guard and the Transportation Security Administration (TSA), issued a joint final rule (72 FR 3492; January 25, 2007) pursuant to the Maritime Transportation Security Act (MTSA), Public Law 107–295, 116 Stat. 2064 (November 25, 2002), and the Security and Accountability for Every Port Act of 2006 (SAFE Port Act), Public Law 109–347 (October 13, 2006). This rule requires all credentialed merchant mariners and individuals with unescorted access to secure areas of a regulated facility or vessel to obtain a TWIC. In this final rule, on page 3510, TSA and Coast Guard stated that a phased enrollment approach based upon risk assessment and cost/benefit would be used to implement the program nationwide, and that TSA would publish a notice in the **Federal Register** indicating when enrollment at a specific location will begin and when it is expected to terminate.

This notice provides the start date for TWIC initial enrollment at the Ports of Charleston, SC; Cleveland, OH; Detroit, MI; Port Fourchon, LA; Boston, MA; and Brownsville, TX. Enrollment in Charleston, SC will begin on November 28, 2007. Enrollment in Cleveland, OH; Detroit, MI; and Port Fourchon, LA will begin on November 29, 2007. Enrollment in Boston will begin on November 30, 2007 and in Brownsville on December 5, 2007. The Coast Guard will publish a separate notice in the **Federal Register** indicating when facilities within the Captain of the Port Zone Charleston, including those in the Port of Charleston; Captain of the Port Zone Buffalo including those in the Port of Cleveland; Captain of the Port Zone Detroit including those in the Port of Detroit; Captain of the Port Zone New Orleans including those in the Port of Port Fourchon; Captain of the Port Zone Boston including those in the Port of Boston; and Captain of the Port Zone Corpus Christi including those in the Port of Brownsville must comply with the portions of the final rule requiring TWIC to be used as an access control measure. That notice will be published at least 90 days before compliance is required.

To obtain information on the pre-enrollment and enrollment process, and enrollment locations, visit TSA's TWIC Web site at *http://www.tsa.gov/twic.*

Issued in Arlington, Virginia, on November 16, 2007.

Stephen Sadler,

Director, Maritime and Surface Credentialing, Office of Transportation Threat Assessment and Credentialing, Transportation Security Administration.

[FR Doc. E7–22754 Filed 11–20–07; 8:45 am]

BILLING CODE 9110–05–P

DEPARTMENT OF HOMELAND SECURITY

U.S. Citizenship and Immigration Services

Agency Information Collection Activities: Revision of an Existing Information Collection; Request for Comments and Suggestions for Making the Form More User Friendly

AGENCY: U.S. Citizenship and Immigration Services, HSD.

ACTION: 30-Day Notice of Information Collection Under Review: Form I–589, Application for Asylum and Withholding of Removal; OMB Control No. 1615–0067.

The Department of Homeland Security, U.S. Citizenship and Immigration Services (USCIS) has submitted the following information collection request to the Office of Management and Budget (OMB) for review and clearance in accordance with the Paperwork Reduction Act of 1995. The information collection was previously published in the **Federal Register** on June 29, 2007, at 72 FR 35713. The notice allowed for a 60-day public comment period, and also requested suggestions for making the form more user friendly. USCIS did not receive any comments for this information collection.

The purpose of this notice is to allow an additional 30 days for public comments. Comments are encouraged and will be accepted until December 21, 2007. This process is conducted in accordance with 5 CFR 1320.10.

Written comments and/or suggestions regarding the item(s) contained in this notice, especially regarding the estimated public burden and associated response time, should be directed to the Department of Homeland Security (DHS), USCIS, Chief, Regulatory Management Division, Clearance Office, 111 Massachusetts Avenue, 3rd floor, Washington, DC 20529. Comments may also be submitted to DHS via facsimile to 202–272–8352 or via e-mail at *rfs.regs@dhs.gov*, and to the OMB USCIS Desk Officer via facsimile at 202–395–6974 or via e-mail at *kastrich@omb.eop.gov*.

When submitting comments by e-mail please make sure to add OMB Control Number 1615–0067 in the subject box. Written comments and suggestions from the public and affected agencies should address one or more of the following four points:

(1) Evaluate whether the proposed collection of information is necessary for the proper performance of the functions of the agency, including whether the information will have practical utility;

(2) Evaluate the accuracy of the agency's estimate of the burden of the proposed collection of information, including the validity of the methodology and assumptions used;

(3) Enhance the quality, utility, and clarity of the information to be collected;

(4) Minimize the burden of the collection of information on those who are to respond, including through the use of appropriate automated, electronic, mechanical, or other technological collection techniques or other forms of information technology, e.g., permitting electronic submission of responses; and

(5) Suggest how the collection of information can be made more customer-friendly, identify any confusing and/or unnecessary language contained in the collection of information (including the form and form instructions), and offer specific ways that the form and form instructions can be improved upon or clarified so that they are more easily understood by those who do not speak English as their primary language and who may not be familiar with legal terms. Any suggested changes in language must be consistent with the statutory, regulatory and legal requirements for asylum, withholding of removal, and protection pursuant to the Convention Against Torture, and must be sufficiently precise so as to elicit the information needed by adjudicators to decide the cases before them and to provide adequate notice to the applicant of the legal consequences and requirements associated with the application.

Overview of this information collection:

(1) *Type of Information Collection:* Revision of a currently approved information collection.

(2) *Title of the Form/Collection:* Application for Asylum and for Withholding of Removal.

(3) *Agency form number, if any, and the applicable component of the Department of Homeland Security sponsoring the collection:* Form I–589. U.S. Citizenship and Immigration Services.

(4) *Affected public who will be asked or required to respond, as well as a brief abstract: Primary:* Individuals or Households. This information collection will be used to determine whether an alien applying for asylum and/or withholding of deportation in the United States is classifiable as a refugee, and is eligible to remain in the United States.

(5) *An estimate of the total number of respondents and the amount of time estimated for an average respondent to respond:* 63,138 responses at 12 hours per response.

(6) *An estimate of the total public burden (in hours) associated with the collection:* 757,656 annual burden hours.

If you have additional comments, suggestions, or need a copy of the information collection instrument, please visit the USCIS Web site at: *http://www.regulations.gov/fdmspublic/component/main.* We may also be contacted at: USCIS, Regulatory Management Division, 111 Massachusetts Avenue, NW., Suite 3008, Washington, DC 20529, telephone number 202–272–8377.

Dated: November 16, 2007.

Richard A. Sloan,

Chief, Regulatory Management Division, U.S. Citizenship and Immigration Services, Department of Homeland Security.

[FR Doc. E7–22771 Filed 11–20–07; 8:45 am]

BILLING CODE 4410–10–P

DEPARTMENT OF HOMELAND SECURITY

U.S. Citizenship and Immigration Services

[CIS No. 2426–07; DHS Docket No. USCIS–2007–0043]

RIN 1615–ZA61

Cuban Family Reunification Parole Program

AGENCY: U.S. Citizenship and Immigration Services, DHS.

ACTION: Notice.

SUMMARY: This Notice announces U.S. Citizenship and Immigration Services' Cuban Family Reunification Parole Program. Under this program, U.S. Citizenship and Immigration Services is offering beneficiaries of approved family-based immigrant visa petitions an opportunity to receive a discretionary grant of parole to come to the United States rather than remain in Cuba to apply for lawful permanent resident status. The purpose of the program is to expedite family reunification through safe, legal, and orderly channels of migration to the United States and to discourage irregular and inherently dangerous maritime migration.

DATES: This Notice is effective November 21, 2007.

FOR FURTHER INFORMATION CONTACT: Manpreet S. Dhanjal, Refugee Officer, U.S. Citizenship and Immigration Services, Department of Homeland Security, 111 Massachusetts Avenue, NW., 8th Floor, Washington, DC 20529, Telephone (202) 272–1613.

SUPPLEMENTARY INFORMATION:

I. Background

In furtherance of the U.S.-Cuba Migration Accords, the United States endeavors to provide a minimum of 20,000 travel documents annually to aspiring Cuban emigrants. *See* Joint Communiqué on Migration, U.S.-Cuba (Sept. 9, 1994) (known together with the May 2, 1995 Joint Statement as the U.S.-Cuba Migration Accords (hereinafter ''Migration Accords'')). In so doing, the United States offers a safe, legal, and orderly means of coming to the United States. To date, the majority of travel documents issued under the Migration Accords fall into one of three programs: family-based immigrant visas; refugee resettlement; and parole under the Special Cuban Migration Program, also referred to as the Cuban Lottery. For information on the Cuban Lottery, see *http://havana.usinterestsection.gov/diversity_program.html*.

Two aspects of the existing array of migration programs limit the ability of the United States to effectively promote safe, legal, and orderly migration as an alternative to maritime crossings. First, with the exception of ''immediate relatives'' (*e.g.,* spouse, unmarried child) of U.S. citizens (USCs), the number of family-based immigrant visas that are available in any given year is limited by statute. *See* Immigration and Nationality Act (INA) sections 201(c), 202(a) & 203, 8 U.S.C. 1151(c), 1152(a) & 1153. The statutory caps have resulted in long waiting periods before family members remaining in Cuba may rejoin the USCs and lawful permanent residents (LPRs) residing in the United States who petitioned for them. Second, the United States has not been permitted to hold a new registration period since 1998 due to constraints placed on the Cuban Lottery program by the Cuban Government. This greatly reduces the pool of individuals to whom the United States may issue travel documents.

For these reasons, this Notice adds the Cuban Family Reunification Parole (CFRP) Program to the list of migrant programs based on which the United States issues travel documents under the Migration Accords.

II. The CFRP Program

Under the CFRP Program, USCIS may exercise its discretionary parole authority to permit eligible Cuban nationals to come to the United States to rejoin their family members. *See* INA section 212(d)(5)(A), 8 U.S.C. 1182(d)(5)(A) (permits parole of an alien into the United States for urgent humanitarian reasons or significant public benefit); *see also* 8 CFR 212.5(c) & (d) (discretionary authority for granting parole). Granting parole to eligible aliens under the CFRP Program serves the significant public benefit of enabling the United States to meet its commitments under the Migration Accords as well as reducing the perceived need for family members left behind in Cuba to make irregular and inherently dangerous attempts to arrive in the United States through unsafe maritime crossings, thereby discouraging alien smuggling as a means to enter the United States. Whether to parole a particular alien remains, however, a case-by-case, discretionary determination.

III. Participation in the CFRP Program

USCIS will offer participation in the CFRP Program to Cuban nationals who reside in Cuba and who are the beneficiaries (including any accompanying or following to join spouse and children (see INA section 203(d), 8 U.S.C. 1153(d)) of a properly filed Form I–130, ''Petition for Alien Relative,'' that has been approved, but for which an immigrant visa is not yet immediately available.

Under the CFRP Program, USCIS or the Department of State's National Visa Center (NVC) will mail written notice to U.S.-based USC and LPR petitioners whose Forms I–130 have been approved regarding their beneficiary's eligibility to participate in the CFRP Program and the procedures for requesting parole. However, participation in the CFRP is voluntary. If USCIS exercises its discretion to grant parole, it will issue the necessary U.S. travel documents to the beneficiary in Cuba. These travel documents will enable the beneficiary to travel safely to the United States to rejoin his or her family members.

Participation in the CFRP Program is not available to aliens who qualify as ''immediate relatives'' under section 201(b)(2)(A)(i) of the INA, 8 U.S.C. 1151(b)(2)(A)(i). The extraordinary benefit of parole is not needed for these aliens, since they may seek visas for travel to the United States immediately upon the approval of Form I–130.

Additional information about the CFRP Program will be posted at *http://www.uscis.gov.*

Dated: November 15, 2007.

Emilio T. Gonzalez,

Director, U.S. Citizenship and Immigration Services.

[FR Doc. E7–22679 Filed 11–20–07; 8:45 am]

BILLING CODE 4410–10–P

DEPARTMENT OF HOUSING AND URBAN DEVELOPMENT

[Docket No. FR–5123–N–16]

Notice of Proposed Information Collection for Public Comment: Notice of Funding Availability for the Tribal Colleges and University Programs

AGENCY: Office of the Assistant Secretary for Policy Development and Research, HUD.

ACTION: Notice.

SUMMARY: The proposed information collection requirement described below will be submitted to the Office of

Management and Budget (OMB) for review, as required by the Paperwork Reduction Act. The Department is soliciting public comments on the subject proposal.

DATES: *Comments Due Date:* January 22, 2008.

ADDRESSES: Interested persons are invited to submit comments regarding this proposal. Comments should refer to the proposal by name and/or OMB Control Number and should be sent to: Reports Liaison Officer, Office of Policy Development and Research, Department of Housing and Urban Development, 451 7th Street, SW., Room 8234, Washington, DC 20410–6000.

FOR FURTHER INFORMATION CONTACT: Susan Brunson, 202–402–3852 (this is not a toll-free number), for copies of the proposed forms and other available documents.

SUPPLEMENTARY INFORMATION: The Department of Housing and Urban Development will submit the proposed extension of information collection to OMB for review, as required by the Paperwork Reduction Act of 1995 (44 U.S.C. Chapter 35, as amended).

This Notice is soliciting comments from members of the public and affected agencies concerning the proposed collection of information to: (1) Evaluate whether the proposed collection of information is necessary for the proper performance of the functions of the agency, including whether the information will have practical utility; (2) Evaluate the accuracy of the agency's estimate of the burden of the proposed collection of information; (3) Enhance the quality, utility, and clarity of the information to be collected; and (4) Minimize the burden of the collection of information on those who are to respond; including through the use of appropriate automated collection techniques or other forms of information technology (e.g., permitting electronic submission of responses).

This Notice also lists the following information:

Title of Proposal: Notice of Funding Availability for the Tribal College and Universities Program.

OMB Control Number: 2528–0215.

Description of the Need for the Information and Proposed Use: The information is being collected to select applicants for awards in this statutorily created competitive grant program and to monitor performance of grantees to ensure they meet statutory and program goals and requirements.

Agency Form Numbers: SF424, HUD 424–SUPP, HUD 424–CB, SFLLL, HUD–23700, HUD 2880, HUD 2990, HUD 2993, HUD–2994–A, HUD–96010, HUD–96011.

Members of the Affected Public: Tribal Colleges and Universities (TCU) that meet the definition of a TCU established in Title III of the 1998 Amendments to Higher Education Act of 1965 (Pub. L. 105–244, approved October 7, 1998).

Estimation of the total number of hours needed to prepare the information collection including number of respondents, frequency of response, and hours of response: Information pursuant to grant award will be submitted once a year. The following chart details the respondent burden on an annual and semi-annual basis:

	Number of respondents	Total annual responses	Hours per response	Total hours
Applicants	20	20	40	800
Semi-Annual Reports	10	20	6	120
Final Reports	10	10	8	80
Recordkeeping	10	10	5	50
Total			59	1,050

Status of the proposed information collection: Pending OMB approval.

Authority: Section 3506 of the Paperwork Reduction Act of 1995, 44 U.S.C. Chapter 35, as amended.

Dated: November 13, 2007.

Darlene F. Williams,

Assistant Secretary for Policy Development and Research.

[FR Doc. E7–22683 Filed 11–20–07; 8:45 am]

BILLING CODE 4210–67–P

DEPARTMENT OF HOUSING AND URBAN DEVELOPMENT

[Docket No. FR–5117–N–98]

Notice of Submission of Proposed Information Collection to OMB; HUD Standardized Grant Application Forms

AGENCY: Office of the Chief Information Officer, HUD.

ACTION: Notice.

SUMMARY: The proposed information collection requirement described below has been submitted to the Office of Management and Budget (OMB) for review, as required by the Paperwork Reduction Act. The Department is soliciting public comments on the subject proposal.

The subject information collection is required to rate and rank competitive grant applications and to ensure eligibility of applicants for funding. HUD's method for electronic collection of Federal Financial Assistance application budget data standardizes the format for information collection requirements for the applicants.

DATES: *Comments Due Date:* December 21, 2007.

ADDRESSES: Interested persons are invited to submit comments regarding this proposal. Comments should refer to the proposal by name and/or OMB approval Number (2501–0017) and should be sent to: HUD Desk Officer, Office of Management and Budget, New Executive Office Building, Washington, DC 20503; fax: 202–395–6974.

FOR FURTHER INFORMATION CONTACT: Lillian Deitzer, Departmental Reports Management Officer, QDAM, Department of Housing and Urban Development, 451 Seventh Street, SW., Washington, DC 20410; e-mail *Lillian_L._Deitzer@HUD.gov* or telephone (202) 402–8048. This is not a toll-free number. Copies of available documents submitted to OMB may be obtained from Ms. Deitzer or from HUD's Web site at *http://www5.hud.gov:63001/po/i/icbts/collectionsearch.cfm.*

SUPPLEMENTARY INFORMATION: This notice informs the public that the Department of Housing and Urban Development has submitted to OMB a request for approval of the information collection described below. This notice is soliciting comments from members of the public and affecting agencies concerning the proposed collection of information to: (1) Evaluate whether the proposed collection of information is necessary for the proper performance of the functions of the agency, including whether the information will have practical utility; (2) Evaluate the

accuracy of the agency's estimate of the burden of the proposed collection of information; (3) Enhance the quality, utility, and clarity of the information to be collected; and (4) Minimize the burden of the collection of information on those who are to respond; including through the use of appropriate automated collection techniques or other forms of information technology, e.g., permitting electronic submission of responses.

This notice also lists the following information:

Title of Proposal: HUD Standardized Grant Application Forms.

OMB Approval Number: 2501–0017.

Form Numbers: HUD–424–B, HUD–424–CB, HUD–424–CBW, HUD–424–M.

Description of the Need for the Information and Its Proposed Use: The subject information collection is required to rate and rank competitive grant applications and to ensure eligibility of applicants for funding. HUD's method for electronic collection of Federal Financial Assistance application budget data standardizes the format for information collection requirements for the applicants.

Frequency of Submisson: On occasion.

	Number of respondents	Annual responses	×	Hours per response	=	Burden hours
Reporting Burden	1	1		1		1

Total Estimated Burden Hours: 1.

Status: Extension of a currently approved collection.

Authority: Section 3507 of the Paperwork Reduction Act of 1995, 44 U.S.C. 35, as amended.

Dated: November 14, 2007.

Lillian L. Deitzer,

Departmental Paperwork Reduction Act Officer, Office of the Chief Information Officer.

[FR Doc. E7–22707 Filed 11–20–07; 8:45 am]

BILLING CODE 4210–67–P

DEPARTMENT OF HOUSING AND URBAN DEVELOPMENT

[Docket No. FR–5117–N–99]

Notice of Submission of Proposed Information Collection to OMB; ''Logical Model'' Grant Performance Report Standard

AGENCY: Office of the Chief Information Officer, HUD.

ACTION: Notice.

SUMMARY: The proposed information collection requirement described below has been submitted to the Office of Management and Budget (OMB) for review, as required by the Paperwork Reduction Act. The Department is soliciting public comments on the subject proposal.

Applicants of HUD Federal Financial Assistance are required to indicate intended results and impacts. Grant recipients report against their baseline performance standards. This process standardizes grants progress reporting requirements and promotes greater emphasis on performance and results in grant programs.

DATES: *Comments Due Date: December 21, 2007.*

ADDRESSES: Interested persons are invited to submit comments regarding this proposal. Comments should refer to the proposal by name and/or OMB approval Number (2535–0114) and should be sent to: HUD Desk Officer, Office of Management and Budget, New Executive Office Building, Washington, DC 20503; fax: 202–395–6974.

FOR FURTHER INFORMATION CONTACT: Lillian Deitzer, Departmental Reports Management Officer, QDAM, Department of Housing and Urban Development, 451 Seventh Street, SW., Washington, DC 20410; e-mail *Lillian_L._Deitzer@HUD.gov* or telephone (202) 402–8048. This is not a toll-free number. Copies of available documents submitted to OMB may be obtained from Ms. Deitzer or from HUD's Web site at *http://www5.hud.gov:63001/po/i/icbts/collectionsearch.cfm.*

SUPPLEMENTARY INFORMATION: This notice informs the public that the Department of Housing and Urban Development has submitted to OMB a request for approval of the information collection described below. This notice is soliciting comments from members of the public and affecting agencies concerning the proposed collection of information to: (1) Evaluate whether the proposed collection of information is necessary for the proper performance of the functions of the agency, including whether the information will have practical utility; (2) Evaluate the accuracy of the agency's estimate of the burden of the proposed collection of information; (3) Enhance the quality, utility, and clarity of the information to be collected; and (4) Minimize the burden of the collection of information on those who are to respond; including through the use of appropriate automated collection techniques or other forms of information technology, e.g., permitting electronic submission of responses.

This notice also lists the following information:

Title of Proposal: ''Logical Model'' Grant Performance Report Standard.

OMB Approval Number: 2535–0114.

Form Numbers: HUD–96010, HUD–96010–NN, HUD–96010–CD–TA, HUD–96010–ROSS, HUD–96010–PH–FSS, HUD–96010–HOPWA, HUD–96010–HCV–FSS, HUD–96010–BEDI, HUD–96010–HC, HUD–96010–Coc, HUD–96010–HSIAC, HUD–96010–HH LTS, HUD–96010–RHED, HUD–96010–SHOP, HUD–96010–Housing Counseling, HUD–96010–Sec 202, HUD–96010–Sec 811, HUD–96010–ICDBG, HUD–96010–Service Coordinator, HUD–96010–Fair Housing, PEI, HUD–96010–Fair Housing EOI, HUD–96010–Youthbuild, HUD–96010–TCUP, HUD–96010 PHNN, HUD–96010–LOGP, HUD–96010–HH Demo, HUD–96010–HBCU, HUD–96010–ANNHIAC, HUD–96010–HOPE VI.

Description of the Need for the Information and Its Proposed Use: Applicants of HUD Federal Financial Assistance are required to indicate intended results and impacts. Grant recipients report against their baseline performance standards. This process standardizes grants progress reporting requirements and promotes greater emphasis on performance and results in grant programs.

Frequency of Submission: Quarterly, Annually.

	Number of respondents	Annual responses	×	Hours per response	=	Burden hours
Reporting burden	11,000	4.51		2.2		109,175

Total Estimated Burden Hours: 109,175.

Status: Extension of a currently approved collection.

Authority: Section 3507 of the Paperwork Reduction Act of 1995, 44 U.S.C. 35, as amended.

Dated: November 15, 2007.

Lillian L. Deitzer,

Departmental Paperwork Reduction Act, Officer, Office of the Chief Information Officer.

[FR Doc. E7–22708 Filed 11–20–07; 8:45 am]

BILLING CODE 4210–67–P

DEPARTMENT OF THE INTERIOR

Fish and Wildlife Service

Receipt of Application of Endangered Species Recovery Permits

AGENCY: Fish and Wildlife Service, Interior.

ACTION: Notice of availability and receipt of applications.

SUMMARY: We announce our receipt of applications to conduct certain activities pertaining to enhancement of survival of endangered species.

DATES: Written comments on these requests for a permit must be received by December 21, 2007.

ADDRESSES: Written data or comments should be submitted to the Assistant Regional Director, Fisheries-Ecological Services, U.S. Fish and Wildlife Service, P.O. Box 25486, Denver Federal Center, Denver, Colorado 80225–0486; facsimile 303–236–0027. Documents and other information submitted with these applications are available for review, subject to the requirements of the Privacy Act [5 U.S.C. 552A] and Freedom of Information Act [5 U.S.C. 552], by any party who submits a request for a copy of such documents within 30 days of the date of publication of this notice to Kris Olsen, by mail or by telephone at 303–236–4256. All comments received from individuals become part of the official public record.

SUPPLEMENTARY INFORMATION: The following applicants have requested issuance of enhancement of survival permits to conduct certain activities with endangered species pursuant to section 10(a)(1)(A) of the Endangered Species Act of 1973, as amended (16 U.S.C. 1531 *et seq.*).

Applicant—U.S. Forest Service, Bridger-Teton National Forest, Pinedale, Wyoming, TE–106387. The applicant requests a renewed permit to take Kendall Warm Springs dace (*Rhinichthys osculus thermalis*) in conjunction with recovery activities throughout the species' range for the purpose of enhancing their survival and recovery.

Applicant—Kansas Department of Wildlife and Parks, Independence, Kansas, TE–052005. The applicant requests a renewed permit to take American burying beetle (*Nicrophorus americanus*) in conjunction with recovery activities throughout the species' range for the purpose of enhancing their survival and recovery.

Applicant—U.S. Fish and Wildlife Service, Bozeman Fish Technology Center, Bozeman, Montana, TE–038970. The applicant requests a permit amendment to increase take of June suckers (*Chasmistes liorus*) from 5 to 20 mortalities in conjunction with recovery activities throughout the species' range for the purpose of enhancing its survival and recovery.

Applicant—Fort Hays University, Department of Biological Sciences, Hays, Kansas, TE–161445. The applicant requests a permit to take Topeka shiner (Notropis topeka) in conjunction with recovery activities throughout the species' range for the purpose of enhancing their survival and recovery.

Applicant—California Academy of Science, Steinhart Aquarium, San Francisco, California, TE–161444. The applicant requests a permit to possess pallid sturgeon (Scaphirhynchus albus) for public display and propagation in conjunction with recovery activities for the purpose of enhancing their survival and recovery.

Applicant—Bureau of Land Management, Utah State Office, Salt Lake City, Utah, TE–165829. The applicant requests a permit to take *Arctomecon humilis* (Dwarf bear-poppy), *Asclepias welshii* (Welsh's milkweed), *Astragalus ampullarioides* (Shivwitz milk-vetch), *Astragalus holmgreniorum* (Holmgren milk-vetch), *Carex specuicola* (Navajo sedge), *Cycladenia humilis jonesii* (Jones cycladenia), *Erigeron maguirei* (Maguire daisy), *Lepidium barnebyanum* (Barneby ridge-cress), *Lesquerella tumulosa* (Kodachrome bladderpod), *Pediocactus despainii* (San Rafael cactus), *Pediocactus sileri* (Siler pincushion cactus), *Pediocactus winkleri* (Winkler cactus), *Schoenocrambe argillacea* (Clay reed-mustard), *Schoenocrambe barnebyi* (Barney reed-mustard), *Schoenocrambe suffrutescens* (Shrubby reed-mustard), *Sclerocactus glaucus* (Uinta Basin hookless cactus), *Sclerocactus wrightiae* (Wright fishhook cactus), *Spiranthes diluvialis* (Ute ladies'-tresses), *Townsendia aprica* (Last Chance townsendia) in conjunction with recovery activities throughout the species' range for the purpose of enhancing their survival and recovery.

Applicant—Dorde Woodruff, Salt Lake City, Utah, TE–165826. The applicant requests a permit to take *Sclerocactus glaucus* (Uinta Basin hookless cactus) in conjunction with recovery activities throughout the species' range for the purpose of enhancing their survival and recovery.

Applicant—University of Montana, Division of Biological Sciences, Missoula, Montana, TE–165827. The applicant requests a permit to take *Spiranthes diluvialis* (Ute ladies'-tresses) in conjunction with recovery activities throughout the species' range for the purpose of enhancing their survival and recovery.

Dated: October 30, 2007.

Emily Jo Williams,

Regional Director, Denver, Colorado.

[FR Doc. E7–22730 Filed 11–20–07; 8:45 am]

BILLING CODE 4310–55–P

DEPARTMENT OF THE INTERIOR

Fish and Wildlife Service

Meeting Announcement: North American Wetlands Conservation Council

AGENCY: Fish and Wildlife Service, Interior.

ACTION: Notice of meeting.

SUMMARY: The North American Wetlands Conservation Council (Council) will meet to select North American Wetlands Conservation Act (NAWCA) grant proposals for recommendation to the Migratory Bird Conservation Commission (Commission). This meeting is open to the public, and interested persons may present oral or written statements.

DATES: December 4, 2007, 1–3 p.m.

ADDRESSES: The meeting will be held at the Hyatt Place Denver International Airport, 16250 East 40th Avenue, Aurora, CO 80011. The meeting is coordinated by the Council Coordinator, located at the U.S. Fish and Wildlife Service, 4401 N. Fairfax Drive, *Mail Stop:* MBSP 4501–4075, Arlington, VA 22203.

FOR FURTHER INFORMATION CONTACT: Mike Johnson, Council Coordinator, (703) 358–1784 or *dbhc@fws.gov.*

SUPPLEMENTARY INFORMATION: In accordance with NAWCA (Pub. L. 101–233, 103 Stat. 1968, December 13, 1989, as amended), the State-private-Federal

Council meets to consider wetland acquisition, restoration, enhancement, and management projects for recommendation to, and final funding approval by, the Commission. Proposal due dates, application instructions, and eligibility requirements are available on the NAWCA Web site at *http://birdhabitat.fws.gov.* Proposals require a minimum of 50 percent non-Federal matching funds. The Council will consider U.S. Standard and Mexican grant proposals at the meeting. The tentative date for the Commission meeting is March 12, 2008.

Dated: November 13, 2007.

Pamela Matthes,

Acting Assistant Director—Migratory Birds.

[FR Doc. E7–22794 Filed 11–20–07; 8:45 am]

BILLING CODE 4310–55–P

DEPARTMENT OF THE INTERIOR

U.S. Geological Survey

Agency Information Collection Activities: Comment Request

AGENCY: U.S. Geological Survey (USGS), Interior.

ACTION: Notice of a new information collection.

SUMMARY: To comply with the Paperwork Reduction Act of 1995 (PRA), we are notifying the public that we will submit to OMB a new information collection request (ICR) for approval of the paperwork requirements for the National Spatial Data Infrastructure, Cooperative Agreements Program (NSDI CAP). To submit a proposal for the NSDI CAP three standard OMB forms and project narrative must be completed and submitted via on Grants.gov. This notice provides the public an opportunity to comment on the paperwork burden of these forms. The forms are available at *http://www07.grants.gov/agencies/approved_standard_forms.jsp* and the NSDI CAP project narrative guidance is available at *http://www.fgdc.gov/grants/2008CAP/2008CAPSolicitation_ver6.doc.*

DATES: Submit written comments by January 22, 2008.

ADDRESSES: You may submit comments on this information collection to the Department of the Interior, USGS, via:

- Email *atravnic@usgs.gov.* Use Information Collection Number 1028–NEW, NSDI CAP in the subject line.
- FAX: (703) 648–7069. Use Information Collection Number 1028–NEW, NSDI CAP in the subject line.
- Mail or hand-carry comments to the Department of the Interior; USGS Clearance Officer, U.S. Geological Survey, 807 National Center, Reston, VA 20192. Please reference Information Collection 1028–NEW, NSDI CAP in your comments.

FOR FURTHER INFORMATION CONTACT: Brigitta Urban-Mathieux. 703–648–5175. Copies of the forms can be obtained at no cost at *http://www.reginfo.gov*, or by contacting the USGS clearance officer at the phone number list below.

SUPPLEMENTARY INFORMATION:

Title: National Spatial Data Infrastructure Cooperative Agreements Program (NSDI CAP).

OMB Control Number: 1028–NEW NSDI CAP.

Form Number: Standard Form 424 Application for Federal Assistance, Standard Form 424A Budget Information Non-Construction Programs, and Standard Form 424B Assurances Non-Construction Programs, and Project narrative guidance posted on Grants.gov.

Abstract: Respondents are submitting proposals to acquire funding for projects to help build the infrastructure necessary for the geospatial data community to effectively discover, access, share, manage, and use digital geographic data. The NSDI consists of the technologies, policies, organizations, and people necessary to promote cost-effective production, and the ready availability and greater utilization of geospatial data among a variety of sectors, disciplines, and communities. Specific NSDI areas of emphasis include: metadata documentation, clearinghouse establishment, framework development, standards implementation, and geographic information system (GIS) organizational coordination.

We will protect information from respondents considered proprietary under the Freedom of Information Act (5 U.S.C. 552) and its implementing regulations (43 CFR part 2), and under regulations at 30 CFR 250.197, ''Data and information to be made available to the public or for limited inspection.'' Responses are voluntary. No questions of a ''sensitive'' nature are asked. We intend to release the project abstracts and primary investigators for awarded/funded projects only.

Frequency: Annually.

Estimated Number and Description of Respondents: Approximately 80 proposals are submitted by individuals involved in the area of geospatial science.

Estimated Number of Responses: 80.

Annual Burden Hours: 1280.

Estimated Annual Reporting and Recordkeeping ''Hour'' Burden: We estimate the public reporting burden averages 8 to 16 hours per response. This includes the time for reviewing instructions, developing the proposal, and completing and reviewing the information.

Estimated Reporting and Recordkeeping ''Non-Hour Cost'' Burden: We have not identified any ''non-hour cost'' burdens associated with this collection of information.

Public Disclosure Statement: The PRA (44 U.S.C. 3501, *et seq.*) provides that an agency may not conduct or sponsor, and you are not required to respond to, a collection of information unless it displays a currently valid OMB control number. Until OMB approves a collection of information, you are not obligated to respond.

Comments: Before submitting an ICR to OMB, PRA section 3506(c)(2)(A) (44 U.S.C. 3501, *et seq.*) requires each agency ''* * * to provide notice * * * and otherwise consult with members of the public and affected agencies concerning each proposed collection of information * * *'' Agencies must specifically solicit comments to: (a) Evaluate whether the proposed collection of information is necessary for the agency to perform its duties, including whether the information is useful; (b) evaluate the accuracy of the agency's estimate of the burden of the proposed collection of information; (c) enhance the quality, usefulness, and clarity of the information to be collected; and (d) minimize the burden on the respondents, including the use of automated collection techniques or other forms of information technology.

To comply with the public consultation process, we publish this **Federal Register** notice announcing that we will submit this ICR to OMB for approval. The notice provided the required 60-day public comment period.

USGS Information Collection Clearance Officer: Alfred Travnicek, 703–648–7231.

Dated: November 14, 2007.

Ivan DeLoatch,

Staff Director, Federal Geographic Data Committee, Geospatial Information Coodination Office.

[FR Doc. 07–5762 Filed 11–20–07; 8:45 am]

BILLING CODE 4311–AM–M

DEPARTMENT OF THE INTERIOR

National Park Service

Notice of Intent To Prepare a Draft Environmental Impact Statement (EIS) on the Special Resource Study for Castle Nugent Farms, St. Croix, U.S. Virgin Islands

AGENCY: National Park Service, Interior.

ACTION: Notice of Intent to prepare a Draft Environmental Impact Statement (EIS) on the Special Resource Study for Castle Nugent Farms, St. Croix, U.S. Virgin Islands.

SUMMARY: Pursuant to section 102(2)(C) of the National Environmental Policy Act of 1969, and National Park Service (NPS) policy in Director's Order 2 (Park Planning) and Director's Order 12 (Conservation Planning, Environmental Impact Analysis, and Decision-making), the NPS will prepare an EIS for the Special Resource Study (SRS) for Castle Nugent Farms.

The NPS will conduct local public meetings to receive input from interested parties on issues, concerns and suggestions believed to be relevant to the future of Castle Nugent Farms and its potential inclusion as a unit of the National Park System. Of particular interest to the NPS are suggestions and ideas for managing cultural and natural resources, interpretation, and the visitor experience at Castle Nugent Farms. The Draft EIS will formulate and evaluate environmental impacts associated with various types and levels of visitor use and resources management at the site.

DATES: The dates and times of the public scoping meetings will be published in local newspapers and on the internet at *http://parkplanning.nps.gov.* These dates and times may also be obtained by contacting the NPS Southeast Regional Office, Division of Planning and Compliance. Scoping suggestions will be accepted throughout the planning process. The NPS anticipates that the Draft EIS will be available for public review by January 2009.

ADDRESSES: The locations of the public scoping meetings will be published in local newspapers and on the internet at *http://parkplanning.nps.gov.*

Suggestions and ideas should be submitted in writing to the following address: John Barrett, Planning Team Leader, Castle Nugent Farms Special Resource Study, NPS Southeast Regional Office, Division of Planning and Compliance, 100 Alabama Street, SW., 6th Floor, 1924 Building, Atlanta, Georgia 30303.

FOR FURTHER INFORMATION CONTACT: John Barrett, Planning Team Leader, Castle Nugent Farms Special Resource Study, 404–562–3124, extension 637.

SUPPLEMENTARY INFORMATION: Castle Nugent Farms consists of approximately 1,400 acres on the southeastern shore of St. Croix. The rolling terrain consists of a mixture of dry forest, native vegetation, and rangeland that slopes down from an elevation of 750 feet to the sea. The property has a long and diverse history of farming dating back to the 1730s when it was first established as a cotton and sugar plantation. In the 19th century, N'Dama cattle breeding was brought to Castle Nugent Farms. This breed was a prominent part of the farm's operations until the 1950s, when attention shifted towards raising an N'Dama cross breed of cattle known as Senepol. Today, Senepol cattle are still bred under an agreement between the property's owners and the University of the Virgin Islands. Issues currently being considered for the SRS/EIS include a determination of Castle Nugent Farm's national significance and an assessment of the site's suitability and feasibility as a potential addition to the National Park System. The Draft EIS will identify cultural and natural resources of Castle Nugent Farms and evaluate a range of potential management options that might adequately protect these resources and provide for public use and enjoyment.

Our practice is to make comments, including names, home addresses, home phone numbers, and e-mail addresses of respondents, available for public review. Before including your address, phone number, e-mail address, or other personal identifying information in your comment, you should be aware that your entire comment—including your personal identifying information—may be made publicly available at any time. While you can ask us in your comment to withhold your personal identifying information from public review, we cannot guarantee that we will be able to do so. We will always make submissions from organizations or businesses, and from individuals identifying themselves as representatives or officials of organizations or businesses, available for public inspection in their entirety.

Authority: The authority for publishing this notice is contained in 40 CFR 1506.6.

The responsible official for this EIS is Art Frederick, Acting Regional Director, Southeast Region, National Park Service, 100 Alabama Street, SW., 1924 Building, Atlanta, Georgia 30303.

Dated: September 19, 2007.

Art Frederick,

Acting Regional Director, Southeast Region.

[FR Doc. E7–22723 Filed 11–20–07; 8:45 am]

BILLING CODE 4312–53–P

DEPARTMENT OF THE INTERIOR

National Park Service

List of Programs Eligible for Inclusion in Fiscal Year 2008 Funding Agreements To Be Negotiated With Self-Governance Tribes

AGENCY: National Park Service, Interior.

ACTION: Notice.

SUMMARY: This notice lists programs or portions of programs that are eligible for inclusion in Fiscal Year 2008 funding agreements with self-governance tribes and lists programmatic targets pursuant to section 405(c)(4) of the Tribal Self-Governance Act.

DATES: This notice expires on September 30, 2008.

ADDRESSES: Inquiries or comments regarding this notice may be directed to the American Indian Liaison Office, 1201 Eye Street, NW. (Org. 2560, 9th Floor), Washington, DC 20005.

SUPPLEMENTARY INFORMATION:

I. Background

Title II of the Indian Self-Determination Act Amendments of 1994 (Pub. L. 103–413, the ''Tribal Self-Governance Act'' or the ''Act'') instituted a permanent self-governance program at the Department of the Interior (DOI). Under the self-governance program certain programs, services, functions, and activities, or portions thereof, in DOI bureaus other than the Bureau of Indian Affairs (BIA) are eligible to be planned, conducted, consolidated, and administered by a self-governance tribal government.

Under section 405(c) of the Act, the Secretary of the Interior is required to publish annually: (1) A list of non-BIA programs, services, functions, and activities, or portions thereof, that are eligible for inclusion in agreements negotiated under the self-governance program; and (2) programmatic targets for these bureaus.

Under the Act, two categories of non-BIA programs are eligible for self-governance funding agreements (AFAs):

(1) Under section 403(b)(2) of the Act, any non-BIA program, service, function or activity that is administered by DOI that is ''otherwise available to Indian tribes or Indians,'' can be administered by a tribal government through a self-governance funding agreement. The

Department interprets this provision to authorize the inclusion of programs eligible for self-determination contracts under Title I of the Indian Self-Determination and Education Assistance Act (Pub. L. 93–638, as amended). Section 403(b)(2) also specifies ''nothing in this subsection may be construed to provide any tribe with a preference with respect to the opportunity of the tribe to administer programs, services, functions and activities, or portions thereof, unless such preference is otherwise provided by law.''

(2) Under section 403(c) of the Act, the Secretary may include other programs, services, functions, and activities or portions thereof that are of ''special geographic, historical, or cultural significance'' to a self-governance tribe.

Under section 403(k) of the Act, funding agreements cannot include programs, services, functions, or activities that are inherently Federal or where the statute establishing the existing program does not authorize the type of participation sought by the tribe. However, a tribe (or tribes) need not be identified in the authorizing statutes in order for a program or element to be included in a self-governance funding agreement. While general legal and policy guidance regarding what constitutes an inherently Federal function exists, we will determine whether a specific function is inherently Federal on a case-by-case basis considering the totality of circumstances.

II. Eligible non-BIA Programs of the National Park Service

Below is a listing of the types of non-BIA programs, or portions thereof, that may be eligible for self-governance funding agreements because they are either ''otherwise available to Indians'' under Title I and not precluded by any other law, or may have ''special geographic, historical, or cultural significance'' to a participating tribe. The list represents the most current information on programs potentially available to tribes under a self-governance funding agreement.

The National Park Service will also consider for inclusion in funding agreements other programs or activities not included below, but which, upon request of a self-governance tribe, the National Park Service determines to be eligible under either sections 403(b)(2) or 403(c) of the Act. Tribes with an interest in such potential agreements are encouraged to begin such discussions.

The National Park Service welcomes comments from self-governance regarding the content and format of this list.

The National Park Service administers the National Park System, which is made up of national parks, monuments, historic sites, battlefields, seashores, lake shores, and recreation areas. The National Park Service maintains the park units, protects the natural and cultural resources, and conducts a range of visitor services such as law enforcement, park maintenance, and interpretation of geology, history, and natural and cultural resources.

Some elements of the following programs may be eligible for inclusion in a self-governance funding agreement. This listing below was developed considering the proximity of an identified self-governance tribe to a national park, monument, preserve, or recreation area and the types of programs that have components that may be suitable for contracting through a self-governance agreement. This listing is not all-inclusive, but is representative of the types of programs which may be eligible for tribal participation through a funding agreement.

a. Archaeological Surveys
b. Comprehensive Management Planning
c. Cultural Resource Management Projects
d. Ethnographic Studies
e. Erosion Control
f. Fire Protection
g. Gathering Baseline Subsistence Data, Alaska
h. Hazardous Fuel Reduction
i. Housing Construction and Rehabilitation
j. Interpretation
k. Janitorial Services
l. Maintenance
m. Natural Resource Management Projects
n. Operation of Campgrounds
o. Range Assessment, Alaska
p. Reindeer Grazing, Alaska
q. Road Repair
r. Solid Waste Collection and Disposal
s. Trail Rehabilitation
t. Watershed Restoration and Maintenance
u. Beringia Research
v. Elwha River Restoration

Locations of National Park Service Units With Close Proximity to Self-Governance Tribes

1. Bering Land Bridge National Park, Alaska.
2. Cape Krusenstern National Monument, Alaska.
3. Gates of the Arctic National Park & Preserve, Alaska.
4. Glacier Bay National Park and Preserve, Alaska.
5. Katmai National Park and Preserve, Alaska.
6. Kenai Fjords National Park, Alaska.
7. Klondike Gold Rush National Historical Park, Alaska.
8. Kobuk Valley National Park, Alaska.
9. Lake Clark National Park and Preserve, Alaska.
10. Noatak National Preserve, Alaska.
11. Sitka National Historical Park, Alaska.
12. Wrangell-St. Elias National Park and Preserve, Alaska.
13. Yukon-Charley Rivers National Preserve, Alaska.
14. Casa Grande Ruins National Monument, Arizona.
15. Hohokam Pima National Monument, Arizona.
16. Montezuma Castle National Monument, Arizona.
17. Organ Pipe Cactus National Monument, Arizona.
18. Saguaro National Park, Arizona.
19. onto National Monument, Arizona.
20. Tumacacori National Historical Park, Arizona.
21. Tuzigoot National Monument, Arizona.
22. Arkansas Post National Memorial, Arkansas.
23. Joshua Tree National Park, California.
24. Lassen Volcanic National Park, California.
25. Redwood National Park, California.
26. Whiskeytown National Recreation Area, California.
27. Hagerman Fossil Beds National Monument, Idaho.
28. Effigy Mounds National Monument, Iowa.
29. Fort Scott National Historic Site, Kansas.
30. Tallgrass Prairie National Preserve, Kansas.
31. Boston Harbor Islands, a National Park Area, Massachusetts.
32. Cape Cod National Seashore, Massachusetts.
33. New Bedford Whaling National Historical Park, Massachusetts.
34. Sleeping Bear Dunes National Lakeshore, Michigan.
35. Grand Portage National Monument, Minnesota.
36. Voyageurs National Park, Minnesota.
37. Bear Paw Battlefield, Nez Perce National Historical Park, Montana.
38. Glacier National Park, Montana.
39. Great Basin National Park, Nevada.
40. Aztec Ruins National Monument, New Mexico.
41. Bandelier National Monument, New Mexico.

42. Carlsbad Caverns National Park, New Mexico.

43. Chaco Culture National Historical Park, New Mexico.

44. White Sands National Monument, New Mexico.

45. Fort Stanwix National Monument, New York.

46. Cuyahoga Valley National Park, Ohio.

47. Hopewell Culture National Historical Park, Ohio.

48. Chickasaw National Recreation Area, Oklahoma.

49. John Day Fossil Beds National Monument, Oregon.

50. Alibates Flint Quarries National Monument, Texas.

51. Guadalupe Mountains National Park, Texas.

52. Lake Meredith National Recreation Area, Texas.

53. Ebey's Landing National Recreation Area, Texas.

54. Mt. Rainier National Park, Washington.

55. Olympic National Park, Washington.

56. San Juan Islands National Historical Park, Washington.

57. Whitman Mission National Historic Site, Washington.

For questions regarding self-governance contact Dr. Patricia Parker, Chief, American Indian Liaison Office, National Park Service, 1201 Eye Street, NW., (Org. 2560, 9th Floor), Washington, DC 20005, telephone 202–354–6965, fax 202–371–6609.

III. Programmatic Targets

During Fiscal Year 2008, upon request of a self-governance tribe, the National Park Service will negotiate funding agreements for its eligible programs beyond those already negotiated.

The National Park Service currently has self-governance annual funding agreements with the Yurok Tribe and Redwood National Park, the Grand Portage Band of Chippewa Indians and Grand Portage National Monument, and the Lower Elwha Tribal Community and Olympic National Park.

Dated: October 31, 2007.

David Verhey,

Acting Assistant Secretary for Fish and Wildlife and Parks.

[FR Doc. E7–22733 Filed 11–20–07; 8:45 am]

BILLING CODE 4312–52–P

INTERNATIONAL TRADE COMMISSION

[Investigation No. 332–491]

China: Government Policies Affecting U.S. Trade in Selected Sectors

AGENCY: United States International Trade Commission.

ACTION: Notice of addition of case studies on the semi-fabricated copper and brass products sector and paper sector in China; request for information and views from interested parties.

SUMMARY: In its notice announcing institution of this investigation, the Commission indicated that its report would include case studies on industry sectors in China in which government policies and interventions are prevalent, and the notice identified seven industry sectors that would be the subject of such case studies. After receiving and considering public comment and input from other government agencies regarding possible additional case studies, the Commission has decided to include case studies on two additional industry sectors in China, the semi-fabricated copper and brass products sector, and the paper sector.

DATES: February 1, 2008: Deadline for filing written submissions. July 29, 2008: Transmittal of Commission report to the Committee on Ways and Means.

ADDRESSES: All Commission offices, including the Commission's hearing rooms, are located in the United States International Trade Commission Building, 500 E Street, SW., Washington, DC. All written submissions should be addressed to the Secretary, United States International Trade Commission, 500 E Street, SW., Washington, DC 20436. The public record for this investigation may be viewed on the Commission's electronic docket (EDIS) at *http://www.usitc.gov/secretary/edis.htm.*

FOR FURTHER INFORMATION CONTACT: Project leaders Joanne Guth (202–205–3264 or *joanne.guth@usitc.gov*) or Deborah McNay (202–205–3425 or *deborah.mcnay@usitc.gov*) for information on the investigation. For information on the legal aspects of the investigation, contact William Gearhart of the Commission's Office of the General Counsel (202–205–3091 or *william.gearhart@usitc.gov*). The media should contact Margaret O'Laughlin, Office of External Relations (202–205–1819 or *margaret.olaughlin@usitc.gov*). Hearing-impaired individuals may obtain information on this matter by contacting the Commission's TDD terminal at 202–205–1810. General information concerning the Commission may also be obtained by accessing its Internet server (http://www.usitc.gov). Persons with mobility impairments who will need special assistance in gaining access to the Commission should contact the Office of the Secretary at 202–205–2000.

Background

The investigation is being conducted at the request of the Committee on Ways and Means of the U.S. House of Representatives. In its letter of May 23, 2007, the Committee requested that the Commission's report include, among other things, case studies on sectors in China where government policies and interventions are prevalent, and identified seven such sectors: The semiconductor, telecom, banking, textiles and apparel, steel, automotive parts, and aircraft sectors. The Committee also directed that the Commission seek public comment and input from other government agencies on other sectors that should be included as case studies. Notice of institution and the scheduling of a public hearing (which was held on October 30, 2007) was published in the **Federal Register** of July 31, 2007 (72 FR 41773).

Written Submissions

All written submissions should be addressed to the Secretary, and should be received not later than 5:15 p.m., February 1, 2008. All written submissions must conform with the provisions of section 201.8 of the Commission's *Rules of Practice and Procedure* (19 CFR 201.8). Section 201.8 requires that a signed original (or a copy so designated) and fourteen (14) copies of each document be filed. In the event that confidential treatment of a document is requested, at least four (4) additional copies must be filed, in which the confidential information must be deleted (see the following paragraph for further information regarding confidential business information). The Commission's rules authorize filing submissions with the Secretary by facsimile or electronic means only to the extent permitted by section 201.8 of the rules (see Handbook for Electronic Filing Procedures, *http://www.usitc.gov/secretary/fed_reg_notices/rules/documents/handbook_on_electronic_filing.pdf*). Persons with questions regarding electronic filing should contact the Secretary (202–205–2000).

Any submissions that contain confidential business information must also conform with the requirements of section 201.6 of the *Commission's Rules of Practice and Procedure* (19 CFR

201.6). Section 201.6 of the rules requires that the cover of the document and the individual pages be clearly marked as to whether they are the ''confidential'' or ''non-confidential'' version, and that the confidential business information be clearly identified by means of brackets. All written submissions, except for confidential business information, will be made available for inspection by interested parties.

In its request letter, the Committee stated that it intends to make the Commission's report available to the public in its entirety, and asked that the Commission not include any confidential business information or national security classified information in the report it sends to the Committee. Any confidential business information received by the Commission in this investigation and used in preparing this report will not be published in a manner that would reveal the operations of the firm supplying the information.

Issued: November 15, 2007.

By order of the Commission.

Marilyn R. Abbott,

Secretary to the Commission.

[FR Doc. E7–22667 Filed 11–20–07; 8:45 am]

BILLING CODE 7020–02–P

DEPARTMENT OF JUSTICE

Office on Violence Against Women; Notice of Meeting

AGENCY: Office on Violence Against Women, United States Department of Justice.

ACTION: Notice of meeting.

SUMMARY: This notice sets forth the schedule and proposed agenda of the forthcoming public meeting of the National Advisory Committee on Violence Against Women (hereinafter ''the Committee'').

DATES: The meeting will take place on December 3, 2007, from 1 p.m. to 5:30 p.m. and on December 4, 2007, from 9 a.m. to 12:45 p.m.

ADDRESSES: The meeting will take place at the United States Department of Justice, Great Hall, 950 Pennsylvania Ave., NW., Washington, DC 20530.

FOR FURTHER INFORMATION CONTACT: Claire Brickman, The United States Department of Justice Office on Violence Against Women, 800 K Street, NW., Ste. 920, Washington, DC 20530; by telephone at: (202) 514–6975; e-mail: *claire.brickman@usdoj.gov;* or fax: (202) 307–3911. You may also view the Committee's Web site at: *http://www.usdoj.gov/ovw/nac/welcome.html.*

SUPPLEMENTARY INFORMATION: Notice of this meeting is required under section 10(a)(2) of the Federal Advisory Committee Act. The Committee is chartered by the Attorney General, and co-chaired by the Attorney General and the Secretary of Health and Human Services (the Secretary), to provide the Attorney General and the Secretary with practical and general policy advice concerning implementation of the Violence Against Women Act of 1994, the Violence Against Women Act of 2000, the Violence Against Women Act of 2005 and related laws. The Committee also assists in the efforts of the Department of Justice and the Department of Health and Human Services to combat violence against women, especially domestic violence, sexual assault, and stalking. Because violence against women is increasingly recognized as a public health problem of staggering human cost, the Committee brings national attention to the problem to increase public awareness of the need for prevention and enhanced victim services.

This meeting will primarily focus on the Committee's work and the completion of their two-year term of membership. The meeting will take place on December 3, 2007, from 1:30 p.m. until 5:30 p.m., and on December 4, 2007, from 9:00 am until 12:45 p.m., and will include breaks and a working lunch. However, there will be an opportunity for public comment on the Committee's role in providing general policy guidance on implementation of the Violence Against Women Act of 1994, the Violence Against Women Act of 2000, the Violence Against Women Act of 2005 and related laws. Time will be reserved for public comment on December 4, 2007, from 9 a.m. until 9:30 a.m. See the section below for information on reserving time for public comment.

Access: This meeting will be open to the public but registration on a space-available basis is required. Persons who wish to attend must register at least six (6) days in advance of the meeting by contacting Claire Brickman by e-mail at: *claire.brickman@usdoj.gov;* or fax: (202) 307–3911. All attendees will be required to sign in at the meeting registration desk. Please bring photo identification and allow extra time prior to the meeting.

The meeting site is accessible to individuals with disabilities. Individuals who require special accommodations in order to attend the meeting should notify Claire Brickman by e-mail at: *claire.brickman@usdoj.gov;* or fax at: (202) 307–3911, no later than November 26, 2007. After this date, we will attempt to satisfy accommodation requests, but cannot guarantee the availability of any requests.

Written Comments: Interested parties are invited to submit written comments by November 26, 2007 to Claire Brickman at The United States Department of Justice Office on Violence Against Women, 800 K Street, NW., Ste. 920, Washington, DC 20530. Comments may also be submitted by e-mail to Claire Brickman at *claire.brickman@usdoj.gov;* or fax at (202) 307–3911.

Public Comment: Persons interested in participating during the public comment period of the meeting, which will discuss the implementation of the Violence Against Women Act of 1994 and the Violence Against Women Act of 2000, the Violence Against Women Act of 2005 and related legislation, are requested to reserve time on the agenda by contacting Claire Brickman by e-mail at *claire.brickman@usdoj.gov;* or fax at (202) 307–3911. Requests must include the participant's name, organization represented, if appropriate, and a brief description of the issue. Each participant will be permitted approximately 3 to 5 minutes to present comments, depending on the number of individuals reserving time on the agenda. Participants are also encouraged to submit two written copies of their comments at the meeting.

Given the expected number of individuals interested in presenting comments at the meeting, reservations should be made as soon as possible. Persons unable to obtain reservations to speak during the meetings are encouraged to submit written comments, which will be accepted at the meeting site or may be mailed to the Committee, attention Claire Brickman, at 800 K Street, NW., Ste. 920, Washington, DC 20530.

Mary Beth Buchanan,

Acting Director, Office on Violence Against Women.

[FR Doc. E7–22721 Filed 11–20–07; 8:45 am]

BILLING CODE 4410–FX–P

DEPARTMENT OF JUSTICE

Drug Enforcement Administration

Agency Information Collection Activities: Proposed Collection; Comments Requested

ACTION: 30-Day Notice of Information Collection Under Review; Drug Questionnaire—DEA Form 341.

The Department of Justice (DOJ), Drug Enforcement Administration (DEA) will

be submitting the following information collection request to the Office of Management and Budget (OMB) for review and approval in accordance with the Paperwork Reduction Act of 1995. The proposed information collection is published to obtain comments from the public and affected agencies. This proposed information collection was previously published in the **Federal Register** Volume 72, Number 164, page 48682 on August 24, 2007, allowing for a 60-day comment period.

The purpose of this notice is to allow for an additional 30 days for public comment until December 21, 2007. This process is conducted in accordance with 5 CFR 1320.10.

Written comments and/or suggestions regarding the items contained in this notice, especially the estimated public burden and associated response time, should be directed to the Office of Management and Budget, Office of Information and Regulatory Affairs, *Attention:* Department of Justice Desk Officer, Washington, DC 20503. Additionally, comments may be submitted to OMB via facsimile to (202) 395–5806.

Written comments and suggestions from the public and affected agencies concerning the proposed collection of information are encouraged. Your comments should address one or more of the following four points:

—Evaluate whether the proposed collection of information is necessary for the proper performance of the functions of the agency, including whether the information will have practical utility;
—Evaluate the accuracy of the agencies estimate of the burden of the proposed collection of information, including the validity of the methodology and assumptions used;
—Enhance the quality, utility, and clarity of the information to be collected; and
—Minimize the burden of the collection of information on those who are to respond, including through the use of appropriate automated, electronic, mechanical, or other technological collection techniques or other forms of information technology, e.g., permitting electronic submission of responses.

Overview of This Information Collection:

(1) *Type of Information Collection:* Extension of a currently approved collection.

(2) *Title of the Form/Collection:* Drug Questionnaire (DEA Form 341).

(3) Agency form number, if any, and the applicable component of the Department sponsoring the collection: *Form number:* DEA Form 341. *Component:* Human Resources Division, Drug Enforcement Administration, U.S. Department of Justice.

(4) Affected public who will be asked or required to respond, as well as a brief abstract:

Primary: Individuals.

Other: none.

Abstract: DEA Policy states that a past history of illegal drug use may be a disqualification for employment with DEA. This form asks job applicants specific questions about their personal history, if any, of illegal drug use.

(5) An estimate of the total number of respondents and the amount of time estimated for an average respondent to respond: It is estimated that 31,800 respondents will respond annually, taking 5 minutes to complete each form.

(6) An estimate of the total public burden (in hours) associated with the collection: 2,650 annual burden hours.

If additional information is required contact: Lynn Bryant, Department Clearance Officer, United States Department of Justice, Justice Management Division, Policy and Planning Staff, Patrick Henry Building, Suite 1600, 601 D Street, NW., Washington, DC 20530.

Dated: November 15, 2007.

Lynn Bryant,

Department Clearance Officer, PRA, Department of Justice.

[FR Doc. E7–22719 Filed 11–20–07; 8:45 am]

BILLING CODE 4410–09–P

EMPLOYEE BENEFITS SECURITY ADMINISTRATION

[Application No. D–11337]

Proposed Amendment to the Class Exemption for the Release of Claims and Extensions of Credit in Connection With Litigation

AGENCY: Employee Benefits Security Administration, Department of Labor.

ACTION: Notice of proposed amendment to a class exemption.

SUMMARY: This document contains a notice of a proposed amendment to a class exemption from certain prohibited transaction restrictions of the Employee Retirement Income Security Act of 1974 (ERISA or the Act) and from certain taxes imposed by the Internal Revenue Code of 1986, as amended (the Code). The proposed amendment to the class exemption, PTE 2003–39 (68 FR 75632, Dec. 31, 2003), would apply to transactions engaged in by a plan in connection with the settlement of litigation, including bankruptcy litigation. This amendment is being proposed in response to requests from practitioners and independent fiduciaries who sought an expansion of the types of consideration that plans could accept in connection with the settlement of litigation. The proposed exemption, if granted, would affect all employee benefit plans, the participants and beneficiaries of such plans, and parties in interest with respect to those plans engaging in the described transactions.

DATES: Written comments and requests for a public hearing shall be submitted to the Department before January 22, 2008.

DATES: *Effective Date:* If adopted, the proposed amendments would be effective as of date of publication of the final amendments in the **Federal Register**.

ADDRESSES: All written comments and requests for a public hearing (preferably 3 copies) should be sent to: U.S. Department of Labor, Employee Benefits Security Administration, Room N–5700, 200 Constitution Avenue, NW., Washington, DC 20210, Attention: Proposed Amendment to Plan Settlement Class Exemption. Commenters are encouraged to submit responses electronically by e-mail to *e-OED@dol.gov,* or by using the Federal eRulemaking portal at *www.regulations.gov.* All responses will be available for public inspection in the Public Disclosure Room, Employee Benefits Security Administration, U.S. Department of Labor, Room N–1513, 200 Constitution Avenue, NW., Washington, DC 20210, and online at *www.regulations.gov* and *http://www.dol.gov/ebsa.*

FOR FURTHER INFORMATION CONTACT: Brian Buyniski, Office of Exemption Determinations, Employee Benefits Security Administration, U.S. Department of Labor, Washington DC 20210 (202) 693–8540 (not a toll-free number).

SUPPLEMENTARY INFORMATION: This document contains a notice that the Department is proposing an amendment to a class exemption from the restrictions of sections 406(a) and 407(a) of the Act and from the sanctions resulting from the application of section 4975 of the Code, by reason of section 4975(c)(1)(A) through (D) of the Code. The exemption described herein is being proposed by the Department on its own motion pursuant to section 408(a) of the Act and section 4975(c)(2) of the Code, and in accordance with the procedures set forth in 29 CFR part 2570

subpart B (55 FR 32836, August 10, 1990).[1]

Executive Order 12866 Statement

Under Executive Order 12866, the Department must determine whether a regulatory action is ''significant'' and therefore subject to the requirements of the Executive Order and subject to review by the Office of Management and Budget (OMB). Under section 3(f), the order defines a ''significant regulatory action'' as an action that is likely to result in a rule (1) having an annual effect on the economy of $100 million or more, or adversely and materially affecting a sector of the economy, productivity, competition, jobs, the environment, public health or safety, or State, local or tribal governments or communities (also referred to as ''economically significant''); (2) creating serious inconsistency or otherwise interfering with an action taken or planned by another agency; (3) materially altering the budgetary impacts of entitlement grants, user fees, or loan programs or the rights and obligations of recipients thereof; or (4) raising novel legal or policy issues arising out of legal mandates, the President's priorities, or the principles set forth in the Executive Order.

Pursuant to the terms of the Executive Order, it was determined that this action is not ''significant'' under Section 3(f)(4) of the Executive Order. Accordingly, this action has not been reviewed by OMB.

Paperwork Reduction Act

In accordance with the Paperwork Reduction Act of 1995 (44 U.S.C. 3501–3520) (PRA 95), the Department submitted the information collection request (ICR) included in the Class Exemption For Release of Claims and Extensions of Credit in Connection with Litigation (the ''Class Exemption'') to the Office of Management and Budget (OMB) for review and clearance at the time the class exemption was published in the **Federal Register** (68 FR 75632, December 31, 2003) under OMB control number 1210–0091. The ICR was renewed by OMB on May 11, 2006.

As part of its continuing effort to reduce paperwork and respondent burden, the Department of Labor conducts a preclearance consultation program to provide the general public and Federal agencies with an opportunity to comment on proposed and continuing collections of information in accordance with the Paperwork Reduction Act of 1995 (PRA 95) (44 U.S.C. 3506(c)(2)(A)). This helps to ensure that the public understands the Department's collection instructions, respondents can provide the requested data in the desired format, the reporting burden (time and financial resources) is minimized, and the Department can properly assess the impact of collection requirements on respondents.

Currently, the Department is soliciting comments concerning the information collection request (ICR) included in the Proposed Amendment to the Class Exemption for the Release of Claims and Extensions of Credit in Connection with Litigation. A copy of the ICR may be obtained by contacting the person listed in the PRA Addressee section below.

The Department has submitted a copy of amendment to OMB in accordance with 44 U.S.C. 3507(d) for review of its information collections. The Department and OMB are particularly interested in comments that:

Evaluate whether the collection of information is necessary for the proper performance of the functions of the agency, including whether the information will have practical utility;

Evaluate the accuracy of the agency's estimate of the burden of the collection of information, including the validity of the methodology and assumptions used;

Enhance the quality, utility, and clarity of the information to be collected; and

Minimize the burden of the collection of information on those who are to respond, including through the use of appropriate automated, electronic, mechanical, or other technological collection techniques or other forms of information technology, e.g., by permitting electronic submission of responses.

Comments should be sent to the Office of Information and Regulatory Affairs, Office of Management and Budget, Room 10235, New Executive Office Building, Washington, DC 20503; Attention: Desk Officer for the Employee Benefits Security Administration. Although comments may be submitted through January 22, 2008, OMB requests that comments be received within 30 days of publication of the Proposed Amendment to the Class Exemption for the Release of Claims and Extensions of Credit in Connection with Litigation to ensure their consideration.

PRA Addressee: Address requests for copies of the ICR to Gerald B. Lindrew, Office of Policy and Research, U.S. Department of Labor, Employee Benefits Security Administration, 200 Constitution Avenue, NW., Room N–5718, Washington, DC 20210. Telephone: (202) 693–8410; Fax: (202) 219–5333. These are not toll-free numbers. A copy of the ICR also may be obtained at *http://www.RegInfo.gov.*

The Class Exemption contains the following information collections:

Written Settlement Agreement. The terms of the settlement must be specifically described in a written agreement or consent decree.

Acknowledgement by Fiduciary. The fiduciary acting on behalf of the plan must acknowledge in writing that s/he is a fiduciary with respect to the settlement of the litigation.

The proposed amendment would expand the scope of non-cash consideration that may be accepted by an Authorizing Fiduciary on behalf of the plan in connection with the settlement of litigation (subject to additional conditions) to include the following: (i) Employer securities, including bonds, and stock rights or warrants to acquire employer stock; (ii) a written promise by the employer to increase future contributions to the plan (as valued by a qualified appraiser); and/or (iii) a written agreement to adopt future plan amendments or provide additional employee benefits as approved by the Authorizing Fiduciary without an independent appraisal (''benefit enhancements'').

The proposed amendment to the class exemption would modify the written settlement agreement information collection by requiring the agreement to specifically describe (i) the employer securities and written promises of future employer contributions (and the methodology for determining the fair market value of such consideration) that has been tendered as consideration in settlement of litigation and/or (ii) benefit enhancements as approved by the Authorizing Fiduciary that are provided to the plan as consideration for settlement. Because it is usual and customary business practice to express the terms of a settlement in writing with some degree of detail, no additional hour burden has been accounted for this provision of the proposed amendment.

The 2007 proposed amendment also would modify the information collection associated with the Fiduciary Acknowledgment by requiring the Authorizing Fiduciary to acknowledge its fiduciary responsibility for the approval of an attorney's fee award in connection with the settlement in writing. The Department expects the Authorizing Fiduciary to incorporate

[1] Section 102 of Reorganization Plan No. 4 of 1978, 5 U.S.C. app. at 214 (2000) generally transferred the authority of the Secretary of Treasury to issue exemptions under section 4975(c)(2) of the Code to the Secretary of Labor. In the discussion of the exemption, references to specific provisions of the Act should be read to refer as well to the corresponding provisions of section 4975 of the Code.

this acknowledgement into the investment management or trustee agreement outlining the terms and conditions of the fiduciary's retention as a plan service provider, and that this agreement will already be in existence as part of usual and customary business practice. The additional hour burden attributable to the acknowledgement provided in the proposed amendment is negligible; therefore, the Department has not increased the overall hour burden for this provision of the proposed amendment.

I. Background

Based upon feedback from practitioners and independent fiduciaries working to settle litigation in accordance with PTE 2003–39, the Department proposes to expand the type of consideration that can be accepted by an employee benefit plan in settlement of litigation. While the Department encourages cash settlements, it recognizes that there are situations in which it may be in the interest of participants and beneficiaries to accept consideration other than cash in exchange for releasing the claims of the plan and/or the plan fiduciary. In addition, because ERISA does not permit plans to hold employer-issued stock rights, warrants, or most bonds, without an individual exemption,[2] the transactions covered by the class exemption have been expanded to include acquisition, holding, and disposition of employer securities received in settlement of litigation, including bankruptcy litigation. Other amendments seek to clarify the scope of the duties of the independent fiduciary charged with responsibility for settling litigation.

In this regard, the prohibited transaction provisions of the Act generally prohibit transactions between a plan and a party in interest (including a fiduciary) with respect to such plan. Specifically, section 406(a) of the Act states that:

(1) A fiduciary with respect to a plan shall not cause the plan to engage in a transaction, if he knows or should know that such transaction constitutes a direct or indirect—

(A) Sale or exchange, or leasing, of any property between the plan and a party in interest;

(B) Lending of money or other extension of credit between the plan and a party in interest;

(C) Furnishing of goods, services, or facilities between the plan and a party in interest;

(D) Transfer to, or use by or for the benefit of, a party in interest, of any assets of the plan; or

(E) Acquisition, on behalf of the plan, of any employer security or employer real property in violation of section 407(a).

(2) No fiduciary who has authority or discretion to control or manage the assets of a plan shall permit the plan to hold any employer security or employer real property if he knows or should know that holding such security or real property violates section 407(a).

II. Description of Existing Relief

The class exemption for the release of claims and extensions of credit in connection with litigation provides limited relief. Since conflicted fiduciaries are not permitted to have a role under the exemption in settling the litigation, no relief is provided from the self-dealing provisions of ERISA. The current exemption permits the release of the plan's or the plan fiduciary's claim against a party in interest in exchange for consideration, and related extensions of credit. No relief is provided for any prohibited transactions that are part of the underlying claims in the litigation, or any new prohibited transactions that may be proposed in settlement of litigation.[3]

In those situations where the prohibited transaction at issue is ''corrected'' in compliance with section 4975(f)(5) of the Code, this exemption will not be necessary because correcting a prohibited transaction under section 4975 of the Code does not give rise to a prohibited transaction under Title I of the Act.[4] Additionally, there is no prohibited transaction if the plan receives consideration,[5] but does not have to relinquish its cause of action, or other assets. Finally, if the dispute involves the provision of services or incidental goods by a service provider, the settlement may fall within the statutory exemption under section 408(b)(2) of the Act.[6]

The exemption is not available where a party in interest is suing an employee benefit plan, unless the party in interest is suing on behalf of the plan pursuant to section 502(a)(2) or (3) of ERISA, in their capacity as a participant, beneficiary, or fiduciary. Further, it is the view of the Department that, in general, no exemption is needed to settle benefits disputes,[7] including subrogation cases.

The operative language of the current class exemption provides as follows:

Section I. Covered Transactions

Effective January 1, 1975, the restrictions of section 406(a)(1)(A), (B) and (D) of the Act, and the taxes imposed by section 4975(a) and (b) of the Code, by reason of section 4975(c)(1)(A), (B) and (D) of the Code, shall not apply to the following transactions, if the relevant conditions set forth in sections II through III below are met:

(a) The release by the plan or a plan fiduciary, of a legal or equitable claim against a party in interest in exchange for consideration, given by, or on behalf of, a party in interest to the plan in partial or complete settlement of the plan's or the fiduciary's claim.

(b) An extension of credit by a plan to a party in interest in connection with a settlement whereby the party in interest agrees to repay, over time, an amount owed to the plan in settlement of a legal or equitable claim by the plan or a plan fiduciary against the party in interest.

Section II. Conditions Applicable to All Transactions

(a) There is a genuine controversy involving the plan. A genuine controversy will be deemed to exist where the court has certified the case as a class-action.

(b) The fiduciary that authorizes the settlement has no relationship to, or interest in, any of the parties involved in the litigation, other than the plan, that might affect the exercise of such person's best judgment as a fiduciary.

(c) The settlement is reasonable in light of the plan's likelihood of full recovery, the risks and costs of litigation, and the value of claims foregone.

(d) The terms and conditions of the transaction are no less favorable to the plan

[2] For example, PTE 2004–03, Lodgian 401(k) Plan and Trust Agreement, 69 FR 7506, 7509 (Feb. 14, 2004) (warrants); PTE 2003–33, Liberty Media 401(k) Savings Plan, 68 FR 64657 (Nov. 14, 2003) (stock rights); PTE 2002–02, The Golden Retirement Savings Program and The Golden Security Program, 67 FR 1242, 1243 (Jan. 9, 2002) (warrants).

[3] Where the Department of Labor (DOL) and/or the Internal Revenue Service (IRS) is a party to the litigation, new prohibited transactions may be permitted to resolve litigation pursuant to PTE 79–15, Class Exemption for Certain Transactions Authorized or Required by Judicial Order or Judicially Approved Settlement Decree, 44 FR 26979 (May 8, 1979). DOL may also enter into a voluntary settlement with parties covered by ERISA, in which case any prospective prohibited transactions may be covered by the Class Exemption to Permit Certain Transactions Authorized Pursuant to Settlement Agreements between the Department of Labor and Plans, PTE 94–71, 59 FR 51216 (Oct. 7, 1994).

[4] It should be noted that the Department of the Treasury has authority to issue regulations, rulings and opinions regarding the term ''correction'' as defined in section 4975 of the Code. Reorg. Plan No. 4 of 1978, 5 U.S.C. App. at 214 (2000). Treas. Reg. section 53.4941(e)–1(c)(1) (1986) (excise taxes on private foundations) applies to ''correction'' of prohibited transactions under section 4975(f) of the Code (dealing with pension excise taxes) by reason of Temp. Treas. Reg. section 141.4975–13 (1986).

[5] Parties entering into such arrangement should review the IRS rules with respect to restorative payments. Rev. Rul. 2002–45, 2002–2 C.B. 116.

[6] *See*, Advisory Opinion 95–26A (Oct. 17, 1995).

[7] *Lockheed* v. *Spink,* 517 U.S. 882, 892–893 (1996)(the payment of benefits is not a prohibited transaction).

than comparable arms-length terms and conditions that would have been agreed to by unrelated parties under similar circumstances.

(e) The transaction is not part of an agreement, arrangement, or understanding designed to benefit a party in interest.

(f) Any extension of credit by the plan to a party in interest in connection with the settlement of a legal or equitable claim against the party in interest is on terms that are reasonable, taking into consideration the creditworthiness of the party in interest and the time value of money.

(g) The transaction is not described in Prohibited Transaction Exemption (PTE) 76–1, A.I. (41 FR 12740, March 26, 1976, as corrected, 41 FR 16620, April 20, 1976) (relating to delinquent employer contributions to multiemployer and multiple employer collectively bargained plans).

Section III. Prospective Conditions

In addition to the conditions described in section II, the following conditions apply to the transactions described in section I(a) and (b) entered into after January 30, 2004:

(a) Where the litigation has not been certified as a class action by the court, an attorney or attorneys retained to advise the plan on the claim, and having no relationship to any of the parties, other than the plan, determines that there is a genuine controversy involving the plan.

(b) All terms of the settlement are specifically described in a written settlement agreement or consent decree.

(c) Assets other than cash may be received by the plan from a party in interest in connection with a settlement only if:

(1) Necessary to rescind a transaction that is the subject of the litigation; or

(2) Such assets are securities for which there is a generally recognized market, as defined in ERISA section 3(18)(A), and which can be objectively valued. Notwithstanding the foregoing, a settlement will not fail to meet the requirements of this paragraph solely because it includes the contribution of additional qualifying employer securities in settlement of a dispute involving such qualifying employer securities.

(d) To the extent assets, other than cash, are received by the plan in exchange for the release of the plan's or the plan fiduciary's claims, such assets must be specifically described in the written settlement agreement and valued at their fair market value, as determined in accordance with section 5 of the Voluntary Fiduciary Correction (VFC) Program, 67 FR 15062 (March 28, 2002). The methodology for determining fair market value, including the appropriate date for such determination, must be set forth in the written settlement agreement.

(e) Nothing in section III (c) shall be construed to preclude the exemption from applying to a settlement that includes a written agreement to: (1) make future contributions; (2) adopt amendments to the plan; or (3) provide additional employee benefits.

(f) The fiduciary acting on behalf of the plan has acknowledged in writing that it is a fiduciary with respect to the settlement of the litigation on behalf the plan.

(g) The plan fiduciary maintains or causes to be maintained for a period of six years the records necessary to enable the persons described below in paragraph (h) to determine whether the conditions of this exemption have been met, including documents evidencing the steps taken to satisfy sections II (b), such as correspondence with attorneys or experts consulted in order to evaluate the plan's claims, except that:

(1) If the records necessary to enable the persons described in paragraph (h) to determine whether the conditions of the exemption have been met are lost or destroyed, due to circumstances beyond the control of the plan fiduciary, then no prohibited transaction will be considered to have occurred solely on the basis of the unavailability of those records; and

(2) No party in interest, other than the plan fiduciary responsible for recordkeeping, shall be subject to the civil penalty that may be assessed under section 502(i) of the Act or to the taxes imposed by section 4975(a) and (b) of the Code if the records are not maintained or are not available for examination as required by paragraph (h) below;

(h)(1) Except as provided below in paragraph (h)(2) and notwithstanding any provisions of section 504(a)(2) and (b) of the Act, the records referred to in paragraph (g) are unconditionally available at their customary location for examination during normal business hours by—

(A) Any duly authorized employee or representative of the Department or the Internal Revenue Service;

(B) Any fiduciary of the plan or any duly authorized employee or representative of such fiduciary;

(C) Any contributing employer and any employee organization whose members are covered by the plan, or any authorized employee or representative of these entities; or

(D) Any participant or beneficiary of the plan or the duly authorized employee or representative of such participant or beneficiary.

(2) None of the persons described in paragraph (h)(1)(B) through (D) shall be authorized to examine trade secrets or commercial or financial information which is privileged or confidential.

Section III. Definition

For purposes of this exemption, the terms ''employee benefit plan'' and ''plan'' refer to an employee benefit plan described in section 3(3) of ERISA and/or a plan described in section 4975(e)(1) of the Code.

III. Description of Proposed Amendments

New Transactions

The proposed amendment expands the transactions covered by the exemption. In this regard, warrants and stock rights are often offered to shareholders, including the company's employee benefit plan, in settlement of litigation, including bankruptcy. In such situations, bonds or other property that do not constitute qualifying employer securities under ERISA may also be offered to employee benefit plans. ERISA does not permit plans to hold these assets absent an individual exemption. Effective as of the date of publication of the final exemption in the **Federal Register**, a plan may acquire, hold, and dispose of employer securities in settlement of litigation, including bankruptcy. The transactions covered by the exemption include the subsequent disposition of stock rights and warrants by sale or by exercise of the rights or warrants.

Modified Conditions

The exemption currently requires that an attorney retained to advise [8] the plan determine that there is a genuine controversy, unless the case has been certified as a class action. As amended, this genuine controversy requirement may be met in non-class action cases if a Federal or State agency is a plaintiff in the litigation.

Section II (b) has been redrafted to clarify that the settlement is being authorized by a fiduciary (hereinafter referred to as the Authorizing Fiduciary).

Currently, the independent fiduciary must assess the reasonableness of the settlement in light of the risks and costs of litigation, and the value of claims foregone. The Department has become concerned that some independent fiduciaries, and those responsible for their retention, are viewing this condition too narrowly. As result, the amendment clarifies that in assessing the reasonableness of any settlement, the Authorizing Fiduciary must consider the entire settlement. This includes the scope of the release of claims and the value of any non-cash assets. In this regard, the Department further emphasizes that the Authorizing Fiduciary, in assessing the reasonableness of the settlement, may not exclude consideration of the attorney's fee award or any other sums to be paid from the recovery (*e.g.*, consultants) in connection with the settlement of the litigation.

Since the class exemption was finalized, attorneys for the Department have reviewed numerous releases in class-action litigation involving

[8] The Department is aware that at least one commentator has interpreted this condition as requiring a formal opinion of counsel. This is not the case. Further, it is not necessary for the litigation to be filed. If suit has not been filed, the independent attorney can review the disputed issues and conclude that there is a genuine controversy. As noted in the original exemption, the purpose of this condition is to avoid covering sham transactions. *See, Dairy Fresh Corp.* v. *Poole*, 108 F.Supp. 2d 1344, 1353 (S.D. Ala. 2000).

employee benefit plans. Some of these releases were unreasonably broad. The Department continues to believe that the role of the Authorizing Fiduciary includes a careful review of the scope of any release that will eliminate the claims of the plan or the plan fiduciaries. In some instances, it may be necessary for the Authorizing Fiduciary to raise objections with the court, for example, requesting that the court narrow the scope of the release.[9]

The Department further notes that the amount of the attorney's fees award to plaintiffs' attorneys may reduce the plan's recovery, directly or indirectly.[10] The Department recognizes that the attorneys bringing these cases are entitled to fair compensation. However, in some instances there have been abuses in connection with class-action attorney's fees.[11] In 2005, Congress passed the Class Action Fairness Act of 2005 [12] to address some of these issues. Where the plan's share of the settlement is significant, the Authorizing Fiduciary is generally well-positioned to use its bargaining strength to ensure that these fees are reasonable. It is the view of the Department that the Authorizing Fiduciary's role may require involvement in the attorney's fee decisions, including possibly filing a formal objection with the court regarding these fees.

The proposed amendment expands the scope of non-cash consideration that may be accepted by an Authorizing Fiduciary on behalf of the plan, subject to additional conditions. Such consideration is divided into two categories: Non-cash assets and benefits enhancements. Non-cash assets consist of property that can be appraised pursuant to the guidelines set forth in the Department's Voluntary Fiduciary Correction (VFC) Program.[13] As amended, employer securities, including bonds, and stock rights or warrants on employer securities, are covered.

The current exemption specifies that a written agreement to make future contributions could be accepted in exchange for a release. This continues to be the case. As amended, a written promise by the employer to increase future contributions falls within the expanded category of non-cash assets. The fair market value of a stream of future contributions can be determined by a qualified appraiser. In contrast, benefits enhancements, *i.e.*, where the employer offers to change the plan design to increase opportunities to diversify, or to offer other employee benefits, are plan amendments, not plan assets. Therefore, the exemption requires only approval by the Authorizing Fiduciary with respect to such benefits enhancements. Because such enhancements do not make the plan whole and may not benefit the same participants who were harmed by the actions that are the subject of litigation,[14] such offers should be subject to additional scrutiny by the Authorizing Fiduciary.

As amended, relief is provided for the acquisition, holding, and disposition of employer securities that are not ''qualifying,'' within the meaning of section 407(d)(5) of the Act. We understand from our conversations with independent fiduciaries that when settling cases involving financially troubled companies, stock rights and warrants may be all that is available. In other instances, employer-issued bonds or other debt instruments may offer the best possibility for recovery. The relief provided by the class exemption for holding such non-cash assets extends only to relief from the prohibited transaction provisions of sections 406(a) and 407(a) of the Act, no relief is provided from the fiduciary provisions of section 404 of the Act. Before authorizing a settlement involving non-cash assets, the Authorizing Fiduciary must determine whether accepting such assets is prudent and in the interest of participants and beneficiaries.

In addition, where such non-cash assets are employer securities, particular attention must be paid to ERISA's diversification requirements. Section 404(a)(1)(C) requires that a fiduciary diversify the investments of the plan so as to minimize the risk of large losses, unless under the circumstances it is clearly prudent not to do so. Section 404(a)(2) provides that, in the case of an eligible individual account plan, the diversification requirement of section 404(a)(1)(C) and the prudence requirement (only to the extent that it requires diversification) of section 404(a)(1)(B) are not violated by the acquisition or holding of qualifying employer securities. To the extent that the employer securities do not meet the definition of qualifying employer securities under section 407(d)(5) of the Act, the exception contained in section 404(a)(2) from the diversification requirements of the Act would not apply to a Plan's investment in these assets. Accordingly, it is the responsibility of the Authorizing Fiduciary to determine the appropriate level of investment in employer securities, based on the particular facts and circumstances, consistent with its responsibilities under section 404 of the Act.

Where non-cash assets or benefits enhancements are being considered, the Authorizing Fiduciary must first determine that a cash settlement is either not feasible or is less beneficial than the alternative. Any non-cash assets must be valued at their fair market value in accordance with section 5 of the Voluntary Fiduciary Correction Program, 71 FR 20262, 20270 (Apr. 19, 2006). Both non-cash assets and benefits enhancements must be described in the written settlement agreement.

Where employer securities are received by the plan from the employer as part of the settlement, the Authorizing Fiduciary or another independent fiduciary must retain sole responsibility for investment decisions regarding the assets unless such responsibility is delegated to individual participants in an individual account plan. The proposed amendment provides that the plan may not pay any commissions in connection with the acquisition of assets pursuant to this exemption.

[9] The Department does not suggest that other litigants can release ERISA-based claims of the Secretary of Labor, plan fiduciaries, participants or beneficiaries.

[10] In some instances, the amount of the settlement fund is finalized before the attorney's fee awards are determined. In other instances, the attorney's fees are calculated as a percentage of the settlement fund. Generally, a court will review the reasonableness of the attorney's fee award.

[11] This issue was considered by the Federal Trade Commission's Class Action Fairness Project. The FTC's web site contains links to many of the materials produced in connection with the Class-Action Fairness Project. Federal Trade Commission Home Page, *http://www.ftc.gov/bcp/workshops/classaction/index.htm* (last visited Apr. 2, 2007).

[12] Pub. L. 109–2, 119 Stat. 4 (2005). The Act amends both Rule 23 of the Federal Rules of Civil Procedure and 28 U.S.C. 1332. It expands federal jurisdiction over certain cases and contains new rules for class action settlements and calculation of attorney's fees.

[13] 71 FR 20262 (Apr. 19, 2006). The VFC Program, as amended, covers certain prohibited transactions involving illiquid property. The exemption states that such property includes, but is not limited to, restricted and thinly traded stock, limited partnership interests, real estate and collectibles. 71 FR at 20279. Authorizing Fiduciaries may find the guidelines in the VFC Program helpful in considering whether accepting Non-Cash property as part of a settlement is appropriate given the risks and additional costs that may be incurred where a plan holds such property. Illiquid assets may complicate the plan's mandatory distributions at age 70 1/2 pursuant to section 401(a)(9) of the Code. The Service takes the position that compliance with this provision may necessitate distribution of a participant's fractional interest in the illiquid asset, which could result in additional costs to the plan. *See, e.g.*, I.R.S. Priv. Ltr. Rul. 9726032 (June 27, 1997) and I.R.S. Priv. Ltr. Rul. 9226066 (June 26, 1992).

[14] See generally, Field Assistance Bulletin No. 2006–01 (Apr. 9, 2006) at *http://www.dol.gov/ebsa/regs/fab_2006-1.html* for a discussion of issues to be considered when the need arises to allocate settlement proceeds among different classes of participants and beneficiaries.

As is the case in the current exemption, the Authorizing Fiduciary must acknowledge in writing that it is a fiduciary for purposes of the settlement. As noted above, since the original exemption was granted at the end of 2003, the Department has learned that practitioners are divided on whether or not the Authorizing Fiduciary's role in the settlement included review of attorney's fees. It is the view of the Department that in any instance where an attorney's fee award or any other sums to be paid from the recovery has the potential to reduce the plan's overall recovery, the Authorizing Fiduciary should take appropriate steps to review the proposed fees. The exact nature of the Authorizing Fiduciary's role in connection with attorney's fees and other expenses paid from the recovery will vary depending on the size and nature of the litigation.

General Information

The attention of interested persons is directed to the following:

(1) The fact that a transaction is the subject of an exemption under section 408(a) of the Act and section 4975(c)(2) of the Code does not relieve a fiduciary or other party in interest or disqualified person from certain other provisions of the Act and the Code, including any prohibited transaction provisions to which the exemption does not apply and the general fiduciary responsibility provisions of section 404 of the Act which require, among other things, that a fiduciary discharge his or her duties with respect to the plan solely in the interests of the participants and beneficiaries of the plan and in a prudent fashion in accordance with section 404(a)(1)(B) of the Act; nor does it affect the requirement of section 401(a) of the Code that the plan must operate for the exclusive benefit of the employees of the employer maintaining the plan and their beneficiaries;

(2) Before an exemption may be granted under section 408(a) of the Act and section 4975(c)(2) of the Code, the Department must find that the exemption is administratively feasible, in the interests of plans and their participants and beneficiaries and protective of the rights of the participants and beneficiaries of plans;

(3) If granted, the exemption will be applicable to a particular transaction only if the conditions specified in the class exemption are met; and

(4) The exemption, if granted, will be supplemental to, and not in derogation of, any other provisions of the Code and the Act, including statutory or administrative exemptions and transitional rules. Furthermore, the fact that a transaction is subject to an administrative or statutory exemption is not dispositive of whether the transaction is in fact a prohibited transaction.

Written Comments and Hearing Requests

All interested persons are invited to submit written comments or requests for a public hearing on the proposed exemption to the address and within the time period set forth above. All comments will be made a part of the record. Comments and requests for a hearing should state the reasons for the writer's interest in the proposed exemption. Comments received will be available for public inspection with the referenced application at the above-referenced address.

Proposed Exemption

Section I. Prospective Exemption—Covered Transactions

Effective [DATE OF PUBLICATION OF FINAL EXEMPTION IN THE **Federal Register**], the restrictions of sections 406(a) and 407(a) of ERISA and the taxes imposed by section 4975(a) and (b) of the Code, by reason of section 4975(c)(1)(A) through (D) of the Code, shall not apply to the following transactions, if the relevant conditions set forth in sections II through III below are met:

(a) The release by the plan or a plan fiduciary of a legal or equitable claim against a party in interest in exchange for consideration, given by, or on behalf of, a party in interest to the plan in partial or complete settlement of the plan's or the fiduciary's claim.

(b) An extension of credit by a plan to a party in interest in connection with a settlement whereby the party in interest agrees to repay, over time, an amount owed to the plan in settlement of a legal or equitable claim by the plan or a plan fiduciary against the party in interest.

(c) The plan's acquisition, holding, and disposition of employer securities received in settlement of litigation, including bankruptcy. Disposition of employer securities that are stock rights or warrants includes sale of these securities, as well as the exercise of the rights or warrants.

Section II Prospective Exemption—Conditions

(a) Where the litigation has not been certified as a class action by the court, and no federal or state agency is a plaintiff in the litigation, an attorney or attorneys retained to advise the plan on the claim, and having no relationship to any of the parties involved in the claims, other than the plan, determines that there is a genuine controversy involving the plan.

(b) The settlement is authorized by a fiduciary (The Authorizing Fiduciary) that has no relationship to, or interest in, any of the parties involved in the claims, other than the plan, that might affect the exercise of such person's best judgment as a fiduciary.

(c) The settlement terms, including the scope of the release of claims; the amount of cash and the value of any non-cash assets received by the plan; and the amount of any attorney's fee award or any other sums to be paid from the recovery, are reasonable in light of the plan's likelihood of full recovery, the risks and costs of litigation, and the value of claims foregone.

(d) The terms and conditions of the transaction are no less favorable to the plan than comparable arms-length terms and conditions that would have been agreed to by unrelated parties under similar circumstances.

(e) The transaction is not part of an agreement, arrangement, or understanding designed to benefit a party in interest.

(f) Any extension of credit by the plan to a party in interest in connection with the settlement of a legal or equitable claim against the party in interest is on terms that are reasonable, taking into consideration the creditworthiness of the party in interest and the time value of money.

(g) The transaction is not described in section A.I. of Prohibited Transaction Exemption (PTE) 76–1 (41 FR 12740, 12742 (Mar. 26, 1976), as corrected, 41 FR 16620 Apr. 20, 1976)(relating to delinquent employer contributions to multiemployer and multiple employer collectively bargained plans).

(h) All terms of the settlement are specifically described in a written settlement agreement or consent decree.

(i) Non-cash assets, which may include employer securities, and written promises of future employer contributions (hereinafter, ''non-cash assets''), and/or a written agreement to adopt future plan amendments or provide additional employee benefits (hereinafter ''benefits enhancements'') may be provided to the plan by a party in interest in exchange for a release by the plan or a plan fiduciary only if:

(1) the Authorizing Fiduciary determines that an all cash settlement is either not feasible, or is less beneficial to the participants and beneficiaries than accepting all or part of the settlement in non-cash assets and/or benefits enhancements;

(2) the non-cash assets are specifically described in writing as part of the settlement and valued at their fair market value, as determined in accordance with section 5 of the Voluntary Fiduciary Correction (VFC) Program, 71 FR 20262, 20270 (Apr. 19, 2006). The methodology for determining fair market value, including the appropriate date for such determination, must be set forth in the written agreement;

(3) Benefits enhancements are specifically described in writing as part of the settlement. Benefits enhancements may be included as part of the settlement without an independent appraisal. In deciding whether to approve the release of a claim in exchange for benefits enhancements, the Authorizing Fiduciary shall take into account all aspects of the settlement, including the cash or other assets to be received by the plan, the solvency of the party in interest, and the best interests of the class of participants harmed by the acts that are the subject of the plan's claims;

(4) The Authorizing Fiduciary, or another independent fiduciary, acts on behalf of the plan and its participants and beneficiaries for all purposes related to any property, including employer securities as defined by 407(d)(1) of the Act, received by the plan from the employer as part of the settlement. The Authorizing Fiduciary or another independent fiduciary continues to act on behalf of the plan and its participants and beneficiaries for the period that the plan holds the property, including employer securities, received from the employer as part of the settlement. The Authorizing Fiduciary or another independent fiduciary shall have sole responsibility relating to the acquisition, holding, disposition, ongoing management, and where appropriate, exercise of all ownership rights, including the right to vote securities, except that, in the case of an individual account plan which permits participant direction, the Authorizing Fiduciary or other independent fiduciary may delegate to the individual participants to whose accounts the assets have been allocated, the decision to hold, exercise ownership rights, or dispose of the assets;

(j) The plan does not pay any commissions in connection with the acquisition of the assets;

(k) The Authorizing Fiduciary acting on behalf of the plan has acknowledged in writing that it is a fiduciary with respect to the settlement of the litigation on behalf of the plan;

(l) The plan fiduciary maintains or causes to be maintained for a period of six years the records necessary to enable the persons described below in paragraph (m) to determine whether the conditions of this exemption have been met, including documents evidencing the steps taken to satisfy section II (c), such as correspondence with attorneys or experts consulted in order to evaluate the plan's claims, except that:

(1) if the records necessary to enable the persons described in paragraph (m) to determine whether the conditions of the exemption have been met are lost or destroyed, due to circumstances beyond the control of the plan fiduciary, then no prohibited transaction will be considered to have occurred solely on the basis of the unavailability of those records; and

(2) No party in interest, other than the plan fiduciary responsible for record-keeping, shall be subject to the civil penalty that may be assessed under section 502(i) of the Act or to the taxes imposed by section 4975(a) and (b) of the Code if the records are not maintained or are not available for examination as required by paragraph (m) below;

(m)(1) Except as provided below in paragraph (m)(2) and notwithstanding any provisions of section 504(a)(2) and (b) of the Act, the records referred to in paragraph (l) are unconditionally available at their customary location for examination during normal business hours by—

(A) Any duly authorized employee or representative of the Department or the Internal Revenue Service;

(B) Any fiduciary of the plan or any duly authorized employee or representative of such fiduciary;

(C) Any contributing employer and any employee organization whose members are covered by the plan, or any authorized employee or representative of these entities; or

(D) Any participant or beneficiary of the plan or the duly authorized employee or representative of such participant or beneficiary.

(2) Nothing in this exemption supersedes any restriction on the disclosure of trade secrets or other commercial or financial information which is privileged or confidential and this exemption does not authorize any of the persons described in paragraph (m)(1)(B)–(D) to examine trade secrets or such commercial or financial information.

Section III. Definition

For purposes of this exemption, the terms ''employee benefit plan'' and ''plan'' refer to an employee benefit plan described in section 3(3) of ERISA and/or a plan described in section 4975(e)(1) of the Code.

For purposes of this exemption, the term ''employer security'' refers to employer securities described in section 407(d)(1) of ERISA.

IV. Effective Dates

This amendment to the class exemption is effective for settlements occurring on or after the date of publication of the final exemption in the **Federal Register**. For settlements occurring before the date of publication of the final exemption in the **Federal Register**, see the original grant of the Class Exemption for Release of Claims and Extensions of Credit in Connection with Litigation, 68 FR 75632 (Dec. 31, 2003).

Signed at Washington, DC, this 14th day of November, 2007.

Ivan L. Strasfeld,

Director, Office of Exemption Determinations, Employee Benefits Security Administration, U.S. Department of Labor.

[FR Doc. E7–22718 Filed 11–20–07; 8:45 am]

BILLING CODE 4510–29–P

DEPARTMENT OF LABOR

Employment and Training Administration

[TA–W–62,411]

A.O. Smith Electrical Products Company, Scottsville, KY; Notice of Termination of Investigation

Pursuant to Section 221 of the Trade Act of 1974, as amended, an investigation was initiated on November 5, 2007 in response to a petition filed by a company official on behalf of workers at A.O. Smith Electrical Products Company, Scottsville, Kentucky.

The petitioner has requested that the petition be withdrawn. Consequently, the investigation has been terminated.

Signed in Washington, DC, this 14th day of November 2007.

Linda G. Poole,

Certifying Officer, Division of Trade Adjustment Assistance.

[FR Doc. E7–22751 Filed 11–20–07; 8:45 am]

BILLING CODE 4510–FN–P

DEPARTMENT OF LABOR

Employment and Training Administration

[TA–W–62,376]

Dixie Consumer Products, LLC, Dixie Products Division, a Subsidiary of Georgia-Pacific, Including Leased Workers of Staffmark, Los Angeles, CA; Notice of Termination of Investigation; Findings of the Investigation

Pursuant to Section 221 of the Trade Act of 1974, as amended, an investigation was initiated on October 29, 2007 in response to a worker petition filed on behalf of workers of Dixie Consumer Products, LLC, Dixie Products Division, a subsidiary of Georgia Pacific, Los Angeles, California.

The petitioning group of workers is covered by an active certification (TA–W–62,268) which expires on October 23, 2009. Consequently, further investigation in this case would serve no purpose, and the investigation has been terminated.

Signed at Washington, DC, this 14th day of November 2007.

Richard Church,

Certifying Officer, Division of Trade Adjustment Assistance.

[FR Doc. E7–22749 Filed 11–20–07; 8:45 am]

BILLING CODE 4510–FN–P

DEPARTMENT OF LABOR

Employment and Training Administration

[TA–W–61,324]

Ford Motor Company, Vehicle Operations Division, Wixom Assembly Plant, Including On-Site Leased Workers of G-Tech Professional Staffing, Inc., MSX and Aerotech, Wixom, MI; Amended Notice of Revised Determination on Reconsideration

In accordance with section 223 of the Trade Act of 1974 (19 U.S.C. 2273), and section 246 of the Trade Act of 1974 (26 U.S.C. 2813), as amended, the Department of Labor issued a Notice of Revised Determination on Reconsideration on August 22, 2007. The notice was published in the **Federal Register** on August 30, 2007 (72 FR 50128).

On our own motion, the Department reviewed the Notice of Revised Determination on Reconsideration for workers of the subject firm. The workers were engaged in the assembly of Lincoln Towncars.

The review of the investigation record shows that the Department inadvertently excluded from the certification on-site leased workers from G-Tech Professional Staffing, Inc., MSX and Aerotech. The Department has determined that these workers were sufficiently under the control of Ford Motor Company, Vehicle Operations Division, Wixom Assembly Plant to be considered leased workers.

Accordingly, the Department is amending this certification to include leased workers of G-Tech Professional Staffing, Inc., MSX and Aerotech working on-site at the Wixom, Michigan location of the subject firm.

The intent of the Department's certification is to include all workers employed at Ford Motor Company, Vehicle Operations Division, Wixom Assembly Plant, Wixom, Michigan who were adversely-impacted by a shift in production to Canada.

The amended notice applicable to TA–W–61,324 is hereby issued as follows:

All workers of Ford Motor Company, Vehicle Operations Division, Wixom Assembly Plant, including on-site leased workers of G-Tech Professional Staffing, Inc., MSX and Aerotech, Wixom, Michigan, who became totally or partially separated from employment on or after April 12, 2006, through August 22, 2009, are eligible to apply for adjustment assistance under Section 223 of the Trade Act of 1974, and are also eligible to apply for alternative trade adjustment assistance under Section 246 of the Trade Act of 1974.

Signed at Washington, DC, this 14th day of November 2007.

Elliott S. Kushner,

Certifying Officer, Division of Trade Adjustment Assistance.

[FR Doc. E7–22746 Filed 11–20–07; 8:45 am]

BILLING CODE 4510–FN–P

DEPARTMENT OF LABOR

Employment and Training Administration

[TA–W–62,056]

Glaxo Smith Kline, Shared Financial Services Department, Philadelphia, PA; Notice of Negative Determination Regarding Application for Reconsideration

By application dated October 15, 2007, the petitioner requested administrative reconsideration of the Department's negative determination regarding eligibility to apply for Trade Adjustment Assistance (TAA), applicable to workers and former workers of the subject firm. The denial notice was signed on September 17, 2007 and published in the **Federal Register** on October 3, 2007 (72 FR 56385).

Pursuant to 29 CFR 90.18(c) reconsideration may be granted under the following circumstances:

(1) If it appears on the basis of facts not previously considered that the determination complained of was erroneous;

(2) if it appears that the determination complained of was based on a mistake in the determination of facts not previously considered; or

(3) if in the opinion of the Certifying Officer, a mis-interpretation of facts or of the law justified reconsideration of the decision.

The negative TAA determination issued by the Department for workers of Glaxo Smith Kline, Shared Financial Services Department, Philadelphia, Pennsylvania was based on the finding that the worker group does not produce an article within the meaning of Section 222 of the Trade Act of 1974. The investigation revealed that workers of the subject firm performed financial services, such as invoice processing, general accounting, helpdesk support and travel and expense services. The investigation further revealed that although production of article(s) occurred within the firm or appropriate subdivision, the workers do not support this production.

The petitioner contends that the Department erred in its determination and conveys that workers of the subject firm should be investigated on the basis of the secondary impact, and should be certified eligible for TAA as ''downstream producers''. The petitioner alleges that workers of the subject firm are ''value-added production workers'' because they provide the processing of payments of invoices for the vendors that Glaxo Smith Kline uses to produce their drugs.

In order to make an affirmative determination and issue a certification of eligibility to apply for adjustment assistance on the basis of the secondary impact, the workers' firm has to be a downstream producer (final finishing or assembly) for, a primary firm whose workers are certified eligible to apply for adjustment assistance.

In this case, however, workers of Glaxo Smith Kline, Shared Financial Services Department, Philadelphia, Pennsylvania, did not produce a product and did not perform finishing or final assembly of articles produced by a primary firm from August 2006 through August of 2007. Financial services, such as the processing of payments of invoices for the vendors are

not considered production of an article within the meaning of Section 222 of the Trade Act. No production took place at the subject facility and the workers did not support production of articles at any affiliated firm in the relevant time period. Thus the subject firm workers are not eligible under secondary impact.

The petitioner also alleges that workers of the subject firm lost their jobs ''due to off-shoring the services to India.''

The allegation of a shift to another country might be relevant if it was determined that workers of the subject firm produce an article. However, the investigation determined that workers of Glaxo Smith Kline, Shared Financial Services Department, Philadelphia, Pennsylvania do not produce an article within the meaning of Section 222 of the Trade Act of 1974.

Conclusion

After review of the application and investigative findings, I conclude that there has been no error or misinterpretation of the law or of the facts which would justify reconsideration of the Department of Labor's prior decision. Accordingly, the application is denied.

Signed in Washington, DC, this 14th day of November, 2007.

Elliott S. Kushner,

Certifying Officer, Division of Trade Adjustment Assistance.

[FR Doc. E7–22747 Filed 11–20–07; 8:45 am]

BILLING CODE 4510–FN–P

DEPARTMENT OF LABOR

Employment and Training Administration

Investigations Regarding Certifications of Eligibility To Apply for Worker Adjustment Assistance and Alternative Trade Adjustment Assistance

Petitions have been filed with the Secretary of Labor under Section 221(a) of the Trade Act of 1974 (''the Act'') and are identified in the Appendix to this notice. Upon receipt of these petitions, the Director of the Division of Trade Adjustment Assistance, Employment and Training Administration, has instituted investigations pursuant to Section 221(a) of the Act.

The purpose of each of the investigations is to determine whether the workers are eligible to apply for adjustment assistance under Title II, Chapter 2, of the Act. The investigations will further relate, as appropriate, to the determination of the date on which total or partial separations began or threatened to begin and the subdivision of the firm involved.

The petitioners or any other persons showing a substantial interest in the subject matter of the investigations may request a public hearing, provided such request is filed in writing with the Director, Division of Trade Adjustment Assistance, at the address shown below, not later than December 3, 2007.

Interested persons are invited to submit written comments regarding the subject matter of the investigations to the Director, Division of Trade Adjustment Assistance, at the address shown below, not later than December 3, 2007.

The petitions filed in this case are available for inspection at the Office of the Director, Division of Trade Adjustment Assistance, Employment and Training Administration, U.S. Department of Labor, Room C–5311, 200 Constitution Avenue, NW., Washington, DC 20210.

Signed at Washington, DC, this 13th day of November 2007.

Ralph DiBattista,

Director, Division of Trade Adjustment Assistance.

APPENDIX.—TAA PETITIONS INSTITUTED BETWEEN 11/5/07 AND 11/9/07

TA–W	Subject firm (petitioners)	Location	Date of institution	Date of petition
62405	Goodyear Tire and Rubber Company (State)	Tyler, TX	11/05/07	11/02/07
62406	Ceratizit South Carolina (Comp)	Columbia, SC	11/05/07	11/02/07
62407	Eastprint, Inc. (Comp)	North Andover, MA	11/05/07	11/01/07
62408	PQ Corporation (Union)	Anderson, IN	11/05/07	11/05/07
62409	Stanric, Inc. (State)	Fajardo, PR	11/05/07	11/01/07
62410	Small-Pak Chemicals, Inc. (Comp)	Pineville, NC	11/05/07	11/02/07
62411	A.O. Smith Electrical Products Company (Comp)	Scottsville, KY	11/05/07	11/02/07
62412	Walter Drake, Inc. (Comp)	Holyoke, MA	11/05/07	10/19/07
62413	Simclar (North America), Inc. (Comp)	Winterville, NC	11/06/07	11/05/07
62414	Consistent Textile Industries, Inc. (Comp)	Dallas, NC	11/06/07	11/05/07
62415	Bernard Chaus/Cynthia Steffe (UNITE)	Secaucus, NJ	11/06/07	11/05/07
62416	4 Corners Pine/Div. of Wells Eagle, Inc. (Wkrs)	Trout Creek, MT	11/06/07	10/26/07
62417	Avery Dennison Corporation (Comp)	Greensboro, NC	11/06/07	11/05/07
62418	Computer Sciences Corporation (Comp)	Dallas, TX	11/06/07	11/05/07
62419	Flowserve Corporation (Comp)	Dayton, OH	11/06/07	11/05/07
62420	Johnson Hosiery Mills, Inc. (Comp)	Hickory, NC	11/06/07	11/02/07
62421	RCN Corporation (Comp)	Wilkes-Barre, PA	11/07/07	10/19/07
62422	Curtain and Drapery Fashions (Comp)	Lowell, NC	11/07/07	11/01/07
62423	KLA–Tencor (Wkrs)	Tucson, AZ	11/07/07	11/02/07
62424	Tanner Companies LLC (Wkrs)	Rutherfordton, NC	11/07/07	10/31/07
62425	Stoney Point Products (State)	New Ulm, MN	11/07/07	11/06/07
62426	Flextronics Enclosures (Wkrs)	Youngsville, NC	11/07/07	11/06/07
62427	CNI/UTI (Wkrs)	Cadillac, MI	11/07/07	11/06/07
62428	Home Products International (Comp)	Mooresville, NC	11/07/07	11/06/07
62429	Covalence Plastic (State)	City of Industry, CA	11/07/07	10/26/07
62430	Pageland Screen Printers (Comp)	Pageland, SC	11/07/07	11/06/07
62431	Bierner Hat Company (Comp)	Dallas, TX	11/08/07	11/07/07
62432	LEM Industries, Inc. (Comp)	Obetz, OH	11/08/07	11/07/07
62433	Lawrence Sewing (Wkrs)	San Francisco, CA	11/08/07	11/07/07
62434	Arrow Industries, Inc./Arrow Home Fashion (Comp)	Anaheim, CA	11/08/07	11/06/07
62435	Huffman Finishing Company, Inc. (Wkrs)	Granite Falls, NC	11/08/07	11/05/07
62436	Councill Company LLC (Wkrs)	Denton, NC	11/08/07	11/07/07
62437	Mirador International, LLC (Wkrs)	High Point, NC	11/09/07	11/07/07

APPENDIX.—TAA PETITIONS INSTITUTED BETWEEN 11/5/07 AND 11/9/07—Continued

TA–W	Subject firm (petitioners)	Location	Date of institution	Date of petition
62438	Chrysler LLC (UAW)	Fenton, MO	11/09/07	11/07/07
62439	PI, Inc./Custom Molding Divison (Comp)	Athens, GA	11/09/07	11/08/07
62440	Evergy, Inc./Vitrus Division (Comp)	Pawtucket, RI	11/09/07	11/08/07
62441	Hitachi Gst (Wkrs)	San Jose, CA	11/09/07	11/07/07
62442	Infinite Graphics, Inc. (State)	Minneapolis, MN	11/09/07	11/08/07
62443	Booth Electrosystems, Inc. (Comp)	Greeneville, SC	11/09/07	10/18/07

[FR Doc. E7–22744 Filed 11–20–07; 8:45 am]
BILLING CODE 4510–FN–P

DEPARTMENT OF LABOR

Employment and Training Administration

Notice of Determinations Regarding Eligibility To Apply for Worker Adjustment Assistance and Alternative Trade Adjustment Assistance

In accordance with section 223 of the Trade Act of 1974, as amended (19 U.S.C. 2273) the Department of Labor herein presents summaries of determinations regarding eligibility to apply for trade adjustment assistance for workers (TA–W) number and alternative trade adjustment assistance (ATAA) by (TA–W) number issued during the period of *November 5 through November 9, 2007.*

In order for an affirmative determination to be made for workers of a primary firm and a certification issued regarding eligibility to apply for worker adjustment assistance, each of the group eligibility requirements of section 222(a) of the Act must be met.

I. Section (a)(2)(A) all of the following must be satisfied:

A. A significant number or proportion of the workers in such workers' firm, or an appropriate subdivision of the firm, have become totally or partially separated, or are threatened to become totally or partially separated;

B. the sales or production, or both, of such firm or subdivision have decreased absolutely; and

C. increased imports of articles like or directly competitive with articles produced by such firm or subdivision have contributed importantly to such workers' separation or threat of separation and to the decline in sales or production of such firm or subdivision; or

II. Section (a)(2)(B) both of the following must be satisfied:

A. A significant number or proportion of the workers in such workers' firm, or an appropriate subdivision of the firm, have become totally or partially separated, or are threatened to become totally or partially separated;

B. there has been a shift in production by such workers' firm or subdivision to a foreign country of articles like or directly competitive with articles which are produced by such firm or subdivision; and

C. One of the following must be satisfied:

1. The country to which the workers' firm has shifted production of the articles is a party to a free trade agreement with the United States;

2. The country to which the workers' firm has shifted production of the articles to a beneficiary country under the Andean Trade Preference Act, African Growth and Opportunity Act, or the Caribbean Basin Economic Recovery Act; or

3. There has been or is likely to be an increase in imports of articles that are like or directly competitive with articles which are or were produced by such firm or subdivision.

Also, in order for an affirmative determination to be made for secondarily affected workers of a firm and a certification issued regarding eligibility to apply for worker adjustment assistance, each of the group eligibility requirements of section 222(b) of the Act must be met.

(1) A significant number or proportion of the workers in the workers' firm or an appropriate subdivision of the firm have become totally or partially separated, or are threatened to become totally or partially separated;

(2) The workers' firm (or subdivision) is a supplier or downstream producer to a firm (or subdivision) that employed a group of workers who received a certification of eligibility to apply for trade adjustment assistance benefits and such supply or production is related to the article that was the basis for such certification; and

(3) Either—

(A) The workers' firm is a supplier and the component parts it supplied for the firm (or subdivision) described in paragraph (2) accounted for at least 20 percent of the production or sales of the workers' firm; or

(B) A loss or business by the workers' firm with the firm (or subdivision) described in paragraph (2) contributed importantly to the workers' separation or threat of separation.

In order for the Division of Trade Adjustment Assistance to issue a certification of eligibility to apply for Alternative Trade Adjustment Assistance (ATAA) for older workers, the group eligibility requirements of Section 246(a)(3)(A)(ii) of the Trade Act must be met.

1. Whether a significant number of workers in the workers' firm are 50 years of age or older.

2. Whether the workers in the workers' firm possess skills that are not easily transferable.

3. The competitive conditions within the workers' industry (i.e., conditions within the industry are adverse).

Affirmative Determinations for Worker Adjustment Assistance

The following certifications have been issued. The date following the company name and location of each determination references the impact date for all workers of such determination.

The following certifications have been issued. The requirements of section 222(a)(2)(A) (increased imports) of the Trade Act have been met.

TA–W–62,080; Lake Erie Products, A Wholly Owned Subsidiary of TriMas Corporation, Wood Dale, IL: August 17, 2006.

The following certifications have been issued. The requirements of section 222(a)(2)(B) (shift in production) of the Trade Act have been met.

TA–W–62,367A; Rockwell Automation, Operations & Engineering, Mayfield Heights, OH: October 25, 2006.

TA–W–62,197; Texas Instruments Incorporated, KFAB Manufacturing Division, Dallas, TX: September 24, 2006.

The following certifications have been issued. The requirements of section 222(b) (supplier to a firm whose workers are certified eligible to apply for TAA) of the Trade Act have been met.

None.

The following certifications have been issued. The requirements of section 222(b) (downstream producer for a firm whose workers are certified eligible to apply for TAA based on increased imports from or a shift in production to Mexico or Canada) of the Trade Act have been met.

None.

Affirmative Determinations for Worker Adjustment Assistance and Alternative Trade Adjustment Assistance

The following certifications have been issued. The date following the company name and location of each determination references the impact date for all workers of such determination.

The following certifications have been issued. The requirements of section 222(a)(2)(A) (increased imports) and Section 246(a)(3)(A)(ii) of the Trade Act have been met.

TA–W–62,222; ALRS Inc., dba Guildcraft of California, Rancho Dominguez, CA: September 27, 2006.

TA–W–62,231; Wilson Sporting Goods Company, Golf Division, Humboldt, TN: September 8, 2007.

TA–W–62,266; Classic Die, Inc., Grand Rapids, MI: October 8, 2006.

TA–W–62,377; First Choice Distribution, Working On-Site at Maytag Corp., Newton, IA: October 26, 2006.

TA–W–62,046; Wallowa Forest Products, A Subsidiary of D.R. Johnson Lumber Co., Wallowa, OR: August 24, 2006.

TA–W–62,113; Ken-Bar Manufacturing Company, Baldwin, GA: September 6, 2006.

TA–W–62,289; Metal Powder Products Company, Washington Street Division, St. Mary's, PA: October 4, 2006.

TA–W–62,214; Ford Motor Company, Louisville Assembly Plant, Vehicle Operation Div, Louisville, KY: September 24, 2006.

The following certifications have been issued. The requirements of section 222(a)(2)(B) (shift in production) and section 246(a)(3)(A)(ii) of the Trade Act have been met.

TA–W–62,265; KLA-Tencor Corporation, San Jose, CA: October 5, 2006.

TA–W–62,308; Robertshaw Controls Company, Division of Invensys Controls, Long Beach, CA: October 2, 2006.

TA–W–62,367; Rockwell Automation, Operations & Engineering, Manpower Temporary Service, Dublin, GA: October 25, 2006.

TA–W–62,407; Eastprint, Inc., North Andover, MA: November 1, 2006.

TA–W–62,312; Ridgeway Furniture, Ridgeway, VA: October 15, 2006.

TA–W–62,394; TI Automotive Systems, Plating Department, Warren, MI: October 30, 2006.

The following certifications have been issued. The requirements of section 222(b) (supplier to a firm whose workers are certified eligible to apply for TAA) and section 246(a)(3)(A)(ii) of the Trade Act have been met.

TA–W–62,210; Dexter Chemical LLC, Textile Chemicals Division, Bronx, NY: September 25, 2006.

TA–W–62,210A; Dexter Chemical LLC, Textile Chemicals Division, Charlotte, NY: September 25, 2006.

TA–W–62,230; Collins Products, LLC, Klamath Falls, OR: October 1, 2006.

The following certifications have been issued. The requirements of section 222(b) (downstream producer for a firm whose workers are certified eligible to apply for TAA based on increased imports from or a shift in production to Mexico or Canada) and section 246(a)(3)(A)(ii) of the Trade Act have been met.

None.

Negative Determinations for Alternative Trade Adjustment Assistance

In the following cases, it has been determined that the requirements of 246(a)(3)(A)(ii) have not been met for the reasons specified.

The Department has determined that criterion (1) of section 246 has not been met. The firm does not have a significant number of workers 50 years of age or older.

TA–W–62,367A; Rockwell Automation, Operations & Engineering, Mayfield Heights, OH.

The Department has determined that criterion (2) of Section 246 has not been met. Workers at the firm possess skills that are easily transferable.

TA–W–62,080; Lake Erie Products, A Wholly Owned Subsidiary of TriMas Corporation, Wood Dale, IL.

TA–W–62,197; Texas Instruments Incorporated, KFAB Manufacturing Division, Dallas, TX.

The Department has determined that criterion (3) of section 246 has not been met. Competition conditions within the workers' industry are not adverse.

None.

Negative Determinations for Worker Adjustment Assistance and Alternative Trade Adjustment Assistance

In the following cases, the investigation revealed that the eligibility criteria for worker adjustment assistance have not been met for the reasons specified.

Because the workers of the firm are not eligible to apply for TAA, the workers cannot be certified eligible for ATAA.

The investigation revealed that criteria (a)(2)(A)(I.A.) and (a)(2)(B)(II.A.) (employment decline) have not been met.

TA–W–61,819; Bemis Manufacturing, Sheboygan Falls, WI.

The investigation revealed that criteria (a)(2)(A)(I.B.) (Sales or production, or both, did not decline) and (a)(2)(B)(II.B.) (shift in production to a foreign country) have not been met.

TA–W–62,303; Agilent Technologies, Inc., Liberty Lake, WA.

TA–W–62,355; Hawley Products Incorporated, Paducah, KY.

The investigation revealed that criteria (a)(2)(A)(I.C.) (increased imports) and (a)(2)(B)(II.B.) (shift in production to a foreign country) have not been met.

TA–W–62,034; Wavesplitter Technologies, Inc., Headquarter Office, Santa Clara, CA.

TA–W–62,232; Philips Lighting Co, Lamps Division, Danville, KY.

The workers' firm does not produce an article as required for certification under section 222 of the Trade Act of 1974.

TA–W–62,188; Nortel Networks Corp., Global Software Delivery Div., Site Readiness, Research Triangle Park, NC.

TA–W–62,278; GE Money, Business Client Services, Atlanta, GA.

The investigation revealed that criteria of section 222(b)(2) has not been met. The workers' firm (or subdivision) is not a supplier to or a downstream producer for a firm whose workers were certified eligible to apply for TAA.

None.

I hereby certify that the aforementioned determinations were issued during the period of *November 5 through November 9, 2007*. Copies of these determinations are available for inspection in Room C–5311, U.S. Department of Labor, 200 Constitution Avenue, NW., Washington, DC 20210 during normal business hours or will be mailed to persons who write to the above address.

Dated: Novemeber 14, 2007.

Ralph DiBattista,

Director, Division of Trade Adjustment Assistance.

[FR Doc. E7–22745 Filed 11–20–07; 8:45 am]

BILLING CODE 4510–FN–P

DEPARTMENT OF LABOR

Employment and Training Administration

[TA–W–62,064]

Pfizer, Inc., Pilot Plant, Kalamazoo, MI; Notice of Termination of Investigation

Pursuant to section 221 of the Trade Act of 1974, as amended, an investigation was initiated on August 29, 2007 in response to a worker petition filed by a state workforce representative on behalf of workers of Pfizer, Inc, Pilot Plant, Kalamazoo, Michigan.

The petitioning group of workers is covered by an active certification (TA–W–59,828) which expires on October 8, 2008. Consequently, further investigation in this case would serve no purpose, and the investigation has been terminated.

Signed at Washington, DC, this 9th day of November, 2007.

Richard Church,

Certifying Officer, Division of Trade Adjustment Assistance.

[FR Doc. E7–22748 Filed 11–20–07; 8:45 am]

BILLING CODE 4510–FN–P

DEPARTMENT OF LABOR

Employment and Training Administration

[TA–W–61,991]

Superior Studs, LLC, a Wholly Owned Subsidiary of Swanson Group Manufacturing, LLC, Glide, OR; Notice of Termination of Investigation

Pursuant to section 221 of the Trade Act of 1974, as amended, an investigation was initiated on August 16, 2007 in response to a petition filed by a company official on behalf of workers at Superior Studs, LLC, a wholly owned subsidiary of Swanson Group Manufacturing, LLC, Glide, Oregon. The workers at the subject facility produced stud lumber.

The petitioner has requested that the petition be withdrawn. Consequently, the investigation has been terminated.

Signed in Washington, DC, this 8th day of November 2007.

Richard Church,

Certifying Officer, Division of Trade Adjustment Assistance.

[FR Doc. E7–22743 Filed 11–20–07; 8:45 am]

BILLING CODE 4510–FN–P

DEPARTMENT OF LABOR

Occupational Safety and Health Administration

[Docket No. OSHA–2007–0079]

Standard on Fire Brigades; Extension of the Office of Management and Budget's (OMB) Approval of Information Collection (Paperwork) Requirements

AGENCY: Occupational Safety and Health Administration (OSHA), Labor.

ACTION: Request for public comment.

SUMMARY: OSHA solicits public comment concerning its proposal to extend OMB approval of the information collection requirements specified in its Standard on Fire Brigades (29 CFR 1910.156).

DATES: Comments must be submitted (postmarked, sent, or received) by January 22, 2008.

ADDRESSES:

Electronically: You may submit comments and attachments electronically at *http://www.regulations.gov,* which is the Federal eRulemaking Portal. Follow the instructions online for submitting comments.

Facsimile: If your comments, including attachments, are not longer than 10 pages, you may fax them to the OSHA Docket Office at (202) 693–1648.

Mail, hand delivery, express mail, messenger, or courier service: When using this method, you must submit three copies of your comments and attachments to the OSHA Docket Office, OSHA Docket No. OSHA–2007–0079, U.S. Department of Labor, Occupational Safety and Health Administration, Room N–2625, 200 Constitution Avenue, NW., Washington, DC 20210. Deliveries (hand, express mail, messenger, and courier service) are accepted during the Department of Labor's and Docket Office's normal business hours, 8:15 a.m. to 4:45 p.m., e.t.

Instructions: All submissions must include the Agency name and OSHA docket number for the ICR (OSHA–2007–0079). All comments, including any personal information you provide, are placed in the public docket without change, and may be made available online at *http://www.regulations.gov.* For further information on submitting comments see the ''Public Participation'' heading in the section of this notice titled ''Supplementary Information.''

Docket: To read or download comments or other material in the docket, go to *http://www.regulations.gov* or the OSHA Docket Office at the address above. All documents in the docket (including this **Federal Register** notice) are listed in the *http://www.regulations.gov* index; however, some information (e.g., copyrighted material) is not publicly available to read or download through the website. All submissions, including copyrighted material, are available for inspection and copying at the OSHA Docket Office. You may also contact Theda Kenney at the address below to obtain a copy of the ICR.

FOR FURTHER INFORMATION CONTACT: Theda Kenney or Todd Owen, Directorate of Standards and Guidance, OSHA, U.S. Department of Labor, Room N–3609, 200 Constitution Avenue, NW., Washington, DC 20210; telephone (202) 693–2222.

SUPPLEMENTARY INFORMATION:

I. Background

The Department of Labor, as part of its continuing effort to reduce paperwork and respondent (i.e., employer) burden, conducts a preclearance consultation program to provide the public with an opportunity to comment on proposed and continuing information collection requirements in accordance with the Paperwork Reduction Act of 1995 (44 U.S.C. 3506(c)(2)(A)). This program ensures that information is in the desired format, reporting burden (time and costs) is minimal, collection instruments are clearly understood, and OSHA's estimate of the information collection burden is accurate. The Occupational Safety and Health Act of 1970 (the OSH Act) (29 U.S.C. 651 *et seq.*) authorizes information collection by employers as necessary or appropriate for enforcement of the Act or for developing information regarding the causes and prevention of occupational injuries, illnesses, and accidents (29 U.S.C. 657). The OSH Act also requires that OSHA obtain such information with minimum burden upon employers, especially those operating small businesses, and to reduce to the maximum extent feasible unnecessary duplication of efforts in obtaining information (29 U.S.C. 657).

Paragraphs (b)(1), (b)(2), (c)(1), (c)(2), and (c)(4) contain the paperwork requirements of the Standard.

Under paragraph (b)(1) of the Standard, employers must develop and maintain an organizational statement that establishes the: Existence of a fire brigade; the basic organizational structure of the brigade; type, amount, and frequency of training provided to brigade members; expected number of

members in the brigade; and functions that the brigade is to perform. This paragraph also specifies that the organizational statement must be available for review by employees, their designated representatives, and OSHA compliance officers. The organizational statement delineates the functions performed by the brigade members and, therefore, determines the level of training and type of personal protective equipment (PPE) necessary for these members to perform their assigned functions safely. Making the statement available to employees, their designated representatives, and OSHA compliance officers ensures that the elements of the statement are consistent with the functions performed by the brigade members and the occupational hazards they experience, and that employers are providing training and PPE appropriate to these functions and hazards.

To permit an employee with known heart disease, epilepsy, or emphysema to participate in fire-brigade emergency activities, paragraph (b)(2) of the Standard requires employers to obtain a physician's certificate of the employee's fitness to do so. This provision provides employers with a direct and efficient means of ascertaining whether or not they can safely expose employees with these medical conditions to the hazards of fire-fighting operations.

Paragraph (c)(1) of the Standard requires employers to provide training and education for fire-brigade members commensurate with the duties and functions they perform, with brigade leaders and training instructors receiving more comprehensive training and education than employers provide to the general membership. Under paragraph (c)(2) of the Standard, employers must conduct training and education frequently enough, but at least annually, to assure that brigade members are able to perform their assigned duties and functions satisfactorily and safely; employers must provide brigade members who perform interior structural fire fighting with educational and training sessions at least quarterly. In addition, paragraph (c)(4) specifies that employers must: Inform brigade members about special hazards such as storage and use of flammable liquids and gases, toxic chemicals, radioactive sources, and water-reactive substances that may be present during fires and other emergencies; advise brigade members of changes in the special hazards; and develop written procedures that describe the actions brigade members must take when special hazards are present, and make these procedures available in the education and training program and for review by the brigade members.

Providing appropriate training to brigade members at the specified frequencies, informing them about special hazards, developing written procedures on how to respond to special hazards, and making these procedures available for training purposes and review by the members enables them to use operational procedures and equipment in a safe manner to avoid or control dangerous exposures to fire related hazards. Therefore, the training and information requirements specified by paragraphs (c)(1), (c)(2), and (c)(4) of the Standard prevent serious injuries and death among members of fire brigades.

II. Special Issues for Comment

OSHA has a particular interest in comments on the following issues:

- Whether the proposed information collection requirements are necessary for the proper performance of the Agency's functions, including whether the information is useful;
- The accuracy of OSHA's estimate of the burden (time and costs) of the information collection requirements, including the validity of the methodology and assumptions used;
- The quality, utility, and clarity of the information collected; and
- Ways to minimize the burden on employers who must comply; for example, by using automated or other technological information collection and transmission techniques.

III. Proposed Actions

OSHA is requesting that OMB extend its approval of the information collection requirements contained in the Standard on Fire Brigades (29 CFR 1910.156). The Agency is requesting an adjustment decrease from 6,042 hours to 5,048 hours for a total decrease of 994 hours. The decrease is a result of updated data estimating that the total number of establishments requiring new or revised organizational statements has declined from 2,797 to 2,337; and that the number of fire brigade members has declined from 559,390 to 467,330. The Agency will summarize the comments submitted in response to this notice and will include this summary in the request to OMB.

Type of Review: Extension of a currently approved collection.

Title: Standard on Fire Brigades (29 CFR 1910.156).

OMB Number: 1218–0075.

Affected Public: Business or other for-profit.

Number of Respondents: 7,010.

Frequency: On occasion.

Average Time Per Response: Varies from 5 minutes (.05 hour) to obtain a physician's certificate to 2 hours to develop or revise an organizational plan.

Estimated Total Burden Hours: 5,048.

Estimated Cost (Operation and Maintenance): $0.

IV. Public Participation—Submission of Comments on This Notice and Internet Access to Comments and Submissions

You may submit comments in response to this document as follows: (1) Electronically at *http://www.regulations.gov,* which is the Federal eRulemaking Portal; (2) by facsimile (FAX); or (3) by hard copy. All comments, attachments, and other material must identify the Agency name and the OSHA docket number for the ICR (Docket No. OSHA–2007–0079). You may supplement electronic submissions by uploading document files electronically. If you wish to mail additional materials in reference to an electronic or facsimile submission, you must submit them to the OSHA Docket Office (see the section of this notice titled **ADDRESSES**). The additional materials must clearly identify your electronic comments by your name, date, and the docket number so the Agency can attach them to your comments.

Because of security procedures, the use of regular mail may cause a significant delay in the receipt of comments. For information about security procedures concerning the delivery of materials by hand, express delivery, messenger, or courier service, please contact the OSHA Docket Office at (202) 693–2350 (TTY (877) 889–5627).

Comments and submissions are posted without change at *http://www.regulations.gov.* Therefore, OSHA cautions commenters about submitting personal information such as social security numbers and date of birth. Although all submissions are listed in the *http://www.regulations.gov* index, some information (e.g., copyrighted material) is not publicly available to read or download through this Web site. All submissions, including copyrighted material, are available for inspection and copying at the OSHA Docket Office. Information on using the *http://www.regulations.gov* Web site to submit comments and access the docket is available at the Web site's ''User Tips'' link. Contact the OSHA Docket Office for information about materials not available through the Web site, and for assistance in using the Internet to locate docket submissions.

V. Authority and Signature

Edwin G. Foulke, Jr., Assistant Secretary of Labor for Occupational Safety and Health, directed the preparation of this notice. The authority for this notice is the Paperwork Reduction Act of 1995 (44 U.S.C. 3506 *et seq.*) and Secretary of Labor's Order No. 5–2007 (72 FR 31159).

Signed at Washington, DC, on November 15, 2007.

Edwin G. Foulke, Jr.,

Assistant Secretary of Labor for Occupational Safety and Health.

[FR Doc. E7–22706 Filed 11–20–07; 8:45 am]

BILLING CODE 4510–26–P

LEGAL SERVICES CORPORATION

Sunshine Act Meeting of the Board of Directors

TIME AND DATE: The Board of Directors of the Legal Services Corporation will meet on November 27, 2007 via conference call. The meeting will begin at 2 p.m., and continue until conclusion of the Board's agenda.

LOCATION: 3333 K Street, NW., Washington, DC 20007, 3rd Floor Conference Center.

STATUS OF MEETING: Open, *except* that a portion of the meeting of the Board of Directors may be closed to the public pursuant to a vote of the Board of Directors to hold an executive session to consider and act on its response to the U.S. Government Accountability Office's Draft Report on LSC's oversight and management of its grants to legal services programs.

A *verbatim* written transcript of the session will be made. The transcript of any portions of the closed session falling within the relevant provisions of the Government in the Sunshine Act, 5 U.S.C. 552b(c)(9)(B), and the corresponding provision of the Legal Services Corporation's implementing regulation, 45 CFR 1622.5(g), will not be available for public inspection. The transcript of any portions not falling within the cited provisions will be available for public inspection. A copy of the General Counsel's Certifications that the closings are authorized by law will be available upon request.

Directors will participate by telephone conference in such a manner as to enable interested members of the public to hear and identify all persons participating in the meeting. Members of the public may observe/hear the public session meeting by joining participating staff at the location indicated above or calling 1–800–857–5485.

MATTERS TO BE CONSIDERED:

Agenda

Open Session

1. Approval of agenda.
2. Consider and act on Board of Directors' response to the Inspector General's Semiannual Report to Congress for the period of April 1, 2007 through September 30, 2007.
3. Consider and act on other business.
4. Public comment.
5. Consider and act on whether to authorize an executive session of the Board to consider and act on a response to the U.S. Government Accountability Office's draft report on LSC's oversight and management of LSC grants to legal services programs.

Closed Session

6. Consider and act on response to the U.S. Government Accountability Office's draft report on LSC's oversight and management of LSC grants to legal services programs.
7. Consider and act on motion to adjourn meeting.

FOR FURTHER INFORMATION CONTACT: Patricia Batie, Manager of Board Operations, at (202) 295–1500 or *pbatie@lsc.gov.*

Special Needs: Upon request, meeting notices will be made available in alternate formats to accommodate visual and hearing impairments. Individuals who have a disability and need an accommodation to attend the meeting may notify Patricia Batie at (202) 295–1500 or *pbatie@lsc.gov.*

Dated: November 16, 2007.

Victor M. Fortuno,

Vice President, General Counsel & Corporate Secretary.

[FR Doc. 07–5796 Filed 11–19–07; 11:39 am]

BILLING CODE 7050–01–P

NATIONAL FOUNDATION ON THE ARTS AND THE HUMANITIES

National Endowment for the Arts; Federal Advisory Committee on International Exhibitions

Pursuant to Section 10(a)(2) of the Federal Advisory Committee Act (Pub. L. 92–463), as amended, notice is hereby given that a meeting of the Federal Advisory Committee on International Exhibitions will be held on December 13, 2007 in Room 527 of the Nancy Hanks Center, 1100 Pennsylvania Avenue, NW., Washington, DC 20506. The meeting, for the purpose of application review, will take place from 10:30 a.m.–4:30 p.m. (ending time is approximate), and will be closed.

The closed portions of meetings are for the purpose of Panel review, discussion, evaluation, and recommendations on financial assistance under the National Foundation on the Arts and the Humanities Act of 1965, as amended, including information given in confidence to the agency. In accordance with the determination of the Chairman of February 16, 2007, these sessions will be closed to the public pursuant to subsection (c)(6) of section 552b of Title 5, United States Code.

Further information with reference to these meetings can be obtained from Ms. Kathy Plowitz-Worden, Office of Guidelines & Panel Operations, National Endowment for the Arts, Washington, DC 20506, or call 202/682–5691.

Dated: *November 16, 2007.*

Kathy Plowitz-Worden,

Panel Coordinator, Panel Operations.

[FR Doc. E7–22732 Filed 11–20–07; 8:45 am]

BILLING CODE 7537–01–P

NUCLEAR REGULATORY COMMISSION

Notice of Availability on Model Safety Evaluation; Model No Significant Hazards Determination, and Model Application for Licensees That Wish to Adopt TSTF–478, Revision 2, ''BWR Technical Specification Changes that Implement the Revised Rule for Combustible Gas Control''

AGENCY: Nuclear Regulatory Commission.

ACTION: Notice of Availability.

SUMMARY: Notice is hereby given that the staff of the Nuclear Regulatory Commission (NRC) has prepared a model safety evaluation (SE) and a model application related to the modification of containment combustible gas control requirements in technical specifications (TS) for Boiling Water Reactors (BWR). The NRC staff has also prepared a model no-significant-hazards-consideration (NSHC) determination related to this matter. The purpose of these models is to permit the NRC to efficiently process license amendment applications that propose to adopt TSTF–478, Revision 2, ''BWR Technical Specification Changes that Implement the Revised Rule for Combustible Gas Control.'' TSTF–478, Revision 2, deletes Standard Technical Specification (STS) 3.6.3.3, ''Containment Atmosphere Dilution (CAD) System'' and modifies STS 3.6.3.1, ''Drywell Cooling System Fans,'' in NUREG–1433, ''Standard Technical

Specifications General Electric Plants, BWR/4, Rev. 3,'' to establish TS for containment combustible gas control requirements as permitted by revised 10 CFR 50.44. Licensees of nuclear power reactors to which the models apply could then request amendments, confirming the applicability of the SE and NSHC determination to their plants.

DATES: The NRC staff issued a **Federal Register** Notice on October 11, 2007 (72 FR 57970) that provided a model safety evaluation (SE), a model application, and a model no significant hazards consideration (NSHC) determination relating to licensee adoption of TSTF–478, Revision 2, ''BWR Technical Specification Changes that Implement the Revised Rule for Combustible Gas Control.'' The NRC staff hereby announces that the model SE and NSHC determination may be referenced in plant-specific applications to adopt the changes. The staff will post a model application on the NRC web site to assist licensees in using the consolidated line item improvement process (CLIIP).

FOR FURTHER INFORMATION CONTACT: Tim Kobetz, *Mail Stop:* O–12H2, Division of Inspection and Regional Support, Office of Nuclear Reactor Regulation, U.S. Nuclear Regulatory Commission, Washington, DC 20555–0001, telephone 301–415–1932.

SUPPLEMENTARY INFORMATION:

Background

Regulatory Issue Summary 2000–06, ''Consolidated Line Item Improvement Process for Adopting Standard Technical Specification Changes for Power Reactors,'' was issued on March 20, 2000. The consolidated line item improvement process (CLIIP) is intended to improve the efficiency of NRC licensing processes by processing proposed changes to the standard technical specifications (STS) in a manner that supports subsequent license amendment applications. The CLIIP includes an opportunity for the public to comment on a proposed change to the STS after a preliminary assessment by the NRC staff and a finding that the change will likely be offered for adoption by licensees. The CLIIP directs the NRC staff to evaluate any comments received for a proposed change to NUREG–1433 and to either reconsider the change or announce the availability of the change for adoption by licensees.

This notice contains changes proposed for incorporation into the standard technical specifications by owners group participants in the Technical Specification Task Force (TSTF) and is designated TSTF–478. TSTF–478, Revision 2 can be viewed on the NRC's web page utilizing the Agencywide Documents Access and Management System (ADAMS). The ADAMS accession number for TSTF–478, Revision 2, is ML071920140.

TSTF–478, Revision 0, was originally submitted to the NRC on April 25, 2005 (ADAMS Accession No. ML051170308). The NRC staff issued a Request for Additional Information (RAI) letter on November 9, 2006 (ADAMS Accession No. ML062770089) and the TSTF provided an RAI Response letter dated February 7, 2007 (ADAMS Accession No. ML070380175). TSTF–478, Revision 1, was submitted to the NRC on February 21, 2007 (ADAMS Accession No. ML070530490). The NRC made a final determination, and denied TSTF–478, Revision 1, on May 8, 2007 (ADAMS Accession No. ML071090368). TSTF–478, Revision 2, removes the parts of TSTF–478, Revision 1, that were considered unacceptable to NRC staff.

It should be noted that TSTF–478, Revision 2, also proposes to revise the Bases for STS 3.6.3.2, ''Drywell Purge System'' in NUREG–1434, ''Standard Technical Specifications General Electric Plants, BWR/6, Rev. 3,'' by eliminating references to Design Basis Accidents while adding references to Accidents. This change was also listed in TSTF–478, Revision 1, and the NRC staff found this modification to be acceptable (ADAMS Accession No. ML071090368). Licensees that wish to revise the Bases of TS 3.6.3.2, ''Drywell Purge System,'' may do so, without a plant-specific license amendment request, provided the requirements of 10 CFR 50.59 are met. As a result, modifications to the Bases are not included in the model safety evaluation or model application.

Applicability

Licensees opting to apply for this TS change are responsible for reviewing the staff's evaluation, referencing the applicable technical justifications, and providing any necessary plant-specific information. To efficiently process the incoming license amendment applications, the NRC staff requests that each licensee applying for the changes addressed by TSTF–478, Revision 2, using the CLIIP, submit a license amendment request that adheres to the attached model application. Variations from the model application in this notice may require additional review by NRC staff, and may increase the time and resources needed for review. Significant variations from the model application, or inclusion of additional changes to the license, may result in staff rejection of the submittal. Each amendment application made in response to the notice of availability will be processed and noticed in accordance with applicable rules and NRC procedures.

Public Notices

In a notice in the **Federal Register** dated October 11, 2007 (72 FR 57970), the staff requested comment on the use of the CLIIP to process requests to revise the TS regarding TSTF–478, Revision 2. No comments were received. Licensees wishing to adopt the change must submit an application in accordance with applicable rules and other regulatory requirements. For each application the staff will publish a notice of consideration of issuance of amendment to facility operating licenses, a proposed no significant hazards consideration determination, and a notice of opportunity for a hearing. The staff will also publish a notice of issuance of an amendment to an operating license to announce the deletion of TS 3.6.3.3, ''Containment Atmosphere Dilution (CAD) System'' and the modification of TS 3.6.3.1, ''Drywell Cooling System Fans,'' for each plant that receives the requested change.

Dated at Rockville, Maryland, this 14th of November 2007.

For the Nuclear Regulatory Commission.

Timothy Kobetz,

Branch Chief, Technical Specifications Branch, Division of Inspections and Regional Support, Office of Nuclear Reactor Regulation.

Proposed Model Application for License Amendments Adopting TSTF–478, REV. 2, ''BWR Technical Specification Changes That Implement the Revised Rule for Combustible Gas Control''

U.S. Nuclear Regulatory Commission, Document Control Desk, Washington, DC 20555

SUBJECT: [Plant Name], Docket No. 50-__License Amendment Request for Adoption of TSTF–478, REV. 2, ''BWR Technical Specification Changes that Implement the Revised Rule for Combustible Gas Control''

In accordance with the provisions of Section 50.90 of Title 10 of the Code of Federal Regulations (10CFR), [LICENSEE] is submitting a request for an amendment to the technical specifications (TS) for [PLANT NAME, UNIT NO.].

The proposed amendment would delete TS 3.6.3.3, ''Containment

Atmosphere Dilution (CAD) System'' and revise TS 3.6.3.1, ''Drywell Cooling System Fans,'' and the associated Bases, to modify containment combustible gas control requirements as permitted by 10 CFR 50.44. This change is consistent with NRC approved Revision 2 to Technical Specification Task Force (TSTF) Improved Standard Technical Specification Change Traveler, TSTF–478, ''BWR Technical Specification Changes that Implement the Revised Rule for Combustible Gas Control.'' [Discuss any differences with TSTF–478, Revision 2.] The availability of this TS improvement was announced in the **Federal Register** on [Date] ([ ] FR [ ]) as part of the consolidated line item improvement process (CLIIP).

Attachment 1 provides an evaluation of the proposed change. Attachment 2 provides the existing TS pages marked up to show the proposed change. Attachment 3 provides the proposed TS changes in final typed format. Attachment 4 provides the existing Bases pages marked up to show the proposed change.

[LICENSEE] requests approval of the proposed license amendment by [DATE], with the amendment being implemented [BY DATE OR WITHIN X DAYS].

In accordance with 10 CFR 50.91, a copy of this application, with attachments, is being provided to the designated [STATE] Official.

If you should have any questions regarding this submittal, please contact [ ].

I declare [or certify, verify, state] under penalty of perjury that the foregoing is true and correct. [NAME, TITLE]

Attachments:

1. Evaluation of Proposed Change
2. Proposed Technical Specification Change (Mark-Up)
3. Proposed Technical Specification Change (Re-Typed)
4. Proposed Technical Specification Bases Change (Mark-Up)

cc: [NRR Project Manager]
[Regional Office]
[Resident Inspector]
[State Contact]

Attachment 1—Evaluation of Proposed Change

License Amendment Request for Adoption of TSTF–478, Rev. 2, ''BWR Technical Specification Changes that Implement the Revised Rule for Combustible Gas Control''

1.0 Description
2.0 Proposed Change
3.0 Background
4.0 Technical Analysis
5.0 Regulatory Safety Analysis
5.1 No Significant Hazards Determination
5.2 Applicable Regulatory Requirements/Criteria
6.0 Environmental Consideration
7.0 References

1.0 Description

The proposed amendment would delete TS 3.6.3.3, ''Containment Atmosphere Dilution (CAD) System'' and revise TS 3.6.3.1, ''Drywell Cooling System Fans,'' and the associated Bases, that will result in modifications to containment combustible gas control TS requirements as permitted by 10 CFR 50.44. This change is consistent with NRC approved Revision 2 to Technical Specification Task Force (TSTF) Improved Standard Technical Specification Change Traveler, TSTF–478, ''BWR Technical Specification Changes that Implement the Revised Rule for Combustible Gas Control.'' The availability of this TS improvement was announced in the **Federal Register** on [Date] ([ ] FR [ ]) as part of the consolidated line item improvement process (CLIIP).

2.0 Proposed Change

Consistent with the NRC approved Revision 2 of TSTF–478, the proposed TS changes delete TS 3.6.3.3, ''Containment Atmosphere Dilution (CAD) System'' and revise TS 3.6.3.1, ''Drywell Cooling System Fans.'' Proposed revisions to the TS Bases are also included in this application. Adoption of the TS Bases associated with TSTF–478, Revision 2 is an integral part of implementing this TS amendment. The changes to the affected TS Bases pages will be incorporated in accordance with the TS Bases Control Program.

This application is being made in accordance with the CLIIP. [LICENSEE] is [not] proposing variations or deviations from the TS changes described in TSTF–478, Revision 2, or the NRC staff's model safety evaluation (SE) published on [DATE] ([ ] FR [ ]) as part of the CLIIP Notice of Availability. [Discuss any differences with TSTF–478, Revision 2.]

3.0 Background

The background for this application is adequately addressed by the NRC Notice of Availability published on [DATE] ([ ] FR [ ]).

4.0 Technical Analysis

[LICENSEE] has reviewed the safety evaluation (SE) published on [DATE] ([ ] FR [ ]) as part of the CLIIP Notice of Availability. [LICENSEE] has concluded that the technical justifications presented in the SE prepared by the NRC staff are applicable to [PLANT, UNIT NO.] and therefore justify this amendment for the incorporation of the proposed changes to the [PLANT] TS.

5.0 Regulatory Safety Analysis

5.1 No Significant Hazards Determination

[LICENSEE] has reviewed the no significant hazards determination published on [DATE] ([ ] FR [ ]) as part of the CLIIP Notice of Availability. [LICENSEE] has concluded that the determination presented in the notice is applicable to [PLANT, UNIT NO.] and the determination is hereby incorporated by reference to satisfy the requirements of 10 CFR 50.91(a).

5.2 Applicable Regulatory Requirements/Criteria

A description of the proposed TS change and its relationship to applicable regulatory requirements was provided in the NRC Notice of Availability published on [DATE] ([ ] FR [ ]).

6.0 Environmental Consideration

[LICENSEE] has reviewed the environmental evaluation included in the safety evaluation (SE) published on [DATE] ([ ] FR [ ]) as part of the CLIIP Notice of Availability. [LICENSEE] has concluded that the staff's findings presented in that evaluation are applicable to [PLANT, NO.] and the evaluation is hereby incorporated by reference for this application.

7.0 References

1. **Federal Register** Notice, Notice of Availability published on [DATE] ([ ] FR [ ]).

2. TSTF–478 Revision 2, ''BWR Technical Specification Changes that Implement the Revised Rule for Combustible Gas Control.''

Attachment 2—Proposed Technical Specification Change (Mark-Up)

Attachment 3—Proposed Technical Specification Change (Re-Typed)

Attachment 4—Proposed Technical Specification Bases Change (Mark-Up)

Model Safety Evaluation

U.S. Nuclear Regulatory Commission, Office of Nuclear Reactor Regulation, Consolidated Line Item Improvement.

Technical Specification Task Force Change TSTF–478, Revision 2, ''BWR Technical Specification Changes that Implement the Revised Rule for Combustible Gas Control''

1.0 Introduction

By application dated [Date], [Name of Licensee] (the licensee) requested changes to the Technical Specifications (TS) for the [Name of Facility].

The proposed changes would:

1. Delete TS 3.6.3.3, ''Containment Atmosphere Dilution (CAD) System''

2. Revise TS 3.6.3.1, ''Drywell Cooling System Fans'' eliminate Required Action B.1. Required Action B.1 requires operators to verify by administrative means that a hydrogen control function is maintained in the primary containment when two required drywell cooling system fans are inoperable.

The licensee stated that the application is consistent with NRC approved Revision 2 to Technical Specification Task Force (TSTF) Improved Standard Technical Specification Change Traveler, TSTF–478, ''BWR Technical Specification Changes that Implement the Revised Rule for Combustible Gas Control.'' [Discuss any differences with TSTF–478, Revision 2.] The availability of this TS improvement was announced in the **Federal Register** on [Date] ([ ] FR [ ]) as part of the consolidated line item improvement process (CLIIP).

2.0 Regulatory Evaluation

General Design Criterion (GDC) 41, ''Containment atmosphere cleanup,'' of Appendix A to 10 CFR part 50 requires, in part, that systems to control fission products, hydrogen, oxygen, and other substances that may be released into the reactor containment shall be provided as necessary to reduce the concentration and quality of fission products and control the concentration of hydrogen, oxygen, and other substances in the containment atmosphere following postulated accidents to assure that containment integrity is maintained. Section 50.44, ''Combustible Gas Control for Nuclear Power Reactors,'' of Title 10 of the Code of Federal Regulations (10 CFR) provides, among other things, standards for controlling combustible gas that may accumulate in the containment atmosphere during accidents.

10 CFR 50.44 was revised on September 16, 2003 (68 FR 54123), as a result of studies that led to an improved understanding of combustible gas behavior during severe accidents. The studies confirmed that the hydrogen release postulated from a design-basis Loss of Coolant Accident (LOCA) was not risk significant because it was not large enough to lead to early containment failure, and that the risk associated with hydrogen combustion was from beyond design-basis (*i.e.*, severe) accidents. As a result, requirements for maintaining hydrogen control equipment associated with a design-basis LOCA were eliminated from 10 CFR 50.44. Regulatory Guide (RG) 1.7, ''Control of Combustible Gas Concentrations in Containment Following a Loss-of-Coolant Accident,'' Revision 3, dated March 2007, provides detailed guidance that would be acceptable for implementing 10 CFR 50.44.

Section 182a of the Atomic Energy Act requires applicants for nuclear power plant operating licenses to include TS as part of the license application. The TS, among other things, help to ensure the operational capability of structures, systems, and components that are required to protect the health and safety of the public. The NRC's regulatory requirements related to the content of the TS are contained in Section 50.36 of Title 10 of the Code of Federal Regulations (10 CFR 50.36), which requires that the TS include items in the following categories: (1) Safety limits, limiting safety systems settings, and limiting control settings; (2) limiting conditions for operation (LCOs); (3) Surveillance Requirements (SR); (4) design features; and (5) administrative controls. 10 CFR 50.36(c)(2)(i) states, in part, that ''limiting conditions for operation are the lowest functional capability or performance levels of equipment required for safe operation of the facility. When a limiting condition for operation of a nuclear reactor is not met, the licensee shall shut down the reactor or follow any remedial action permitted by the technical specifications until the condition can be met.'' TSTF–478, Revision 2 contains changes to remedial actions permitted by the technical specifications.

2.1 Containment Atmosphere Dilution System

The design purpose of the CAD system is to maintain combustible gas concentrations within the primary containment at or below the flammability limits following a postulated LOCA by diluting hydrogen and oxygen with the addition of nitrogen. The CAD system, however, is considered ineffective at mitigating hydrogen releases from the more risk significant beyond design-basis accidents that could threaten primary containment integrity. The revised 10 CFR 50.44 rule requires systems and measures be in place to reduce the risks associated with combustible gases from beyond design-basis accidents and eliminates requirements for maintaining hydrogen and oxygen control equipment associated with a design-basis LOCA. As a result, the CAD system is no longer a mitigating safety system required to be maintained per the revised 10 CFR 50.44 rule. TS 3.6.3.3, ''Containment Atmosphere Dilution (CAD) System,'' can therefore be deleted, and the technical basis for allowing the deletion is found in Section 3.0, Technical Evaluation.

2.2 Drywell Cooling System Fans

10 CFR 50.44 requires that all primary containments must have a capability for ensuring a mixed atmosphere. The purpose of the Drywell Cooling System Fans is to ensure a uniformly mixed post accident primary containment atmosphere. Drywell Cooling System Fans are a mitigating safety system that meets the requirements of 10 CFR 50.44. The proposed TS change modifies the Required Actions that operators must take when the Drywell Cooling System Fans are inoperable in accordance with 10 CFR 50.36(c)(2)(i). Therefore, the Remedial Actions and associated allowed Completion Times when Drywell Cooling System Fans are inoperable may be revised as permitted by 10 CFR 50.36(c)(2)(i). The technical basis for allowing the revision to the Required Actions in STS 3.6.3.1, ''Drywell Cooling System Fans,'' is found in Section 3.0, Technical Evaluation.

3.0 Technical Evaluation

3.1 Containment Atmosphere Dilution System

BWRs with Mark I containment designs have either installed hydrogen recombiners or CAD systems to meet requirements for combustible gas control following a design-basis LOCA. The hydrogen recombiners and the CAD system perform similar functions for post-LOCA gas control by decreasing the hydrogen concentration. Hydrogen recombiners function to reduce the combustible gas concentration in the primary containment by recombining hydrogen and oxygen to form water vapor. The CAD system functions to maintain combustible gas concentrations within the primary containment at or below the flammability limits following a postulated LOCA by diluting hydrogen and oxygen by adding nitrogen to the mixture.

Studies performed in support of the 10 CFR 50.44 rule change (September 16, 2003, 68 FR 54123) confirmed that the hydrogen release postulated from a design-basis LOCA was not risk significant because it was not large

enough to lead to early containment failure, and that the risk associated with hydrogen combustion was from beyond design-basis (i.e., severe) accidents. As a result, the revised 10 CFR 50.44 rule eliminates requirements for maintaining hydrogen control equipment associated with a design-basis LOCA and requires systems and measures be in place to reduce the risks associated with hydrogen combustion from beyond design-basis accidents.

The CAD system maintains combustible gas concentrations within the primary containment at or below the flammability limits following a LOCA, however, this system, as discussed in the 10 CFR 50.44 rule change was shown to be ineffective at mitigating hydrogen releases from the more risk significant beyond design-basis accidents that could threaten primary containment integrity, and is no longer required to address a design-basis LOCA. Therefore, the staff finds that the deletion of TS 3.6.3.3, ''Containment Atmosphere Dilution (CAD) System,'' is acceptable.

3.2 Drywell Cooling System Fans

The design function of the Drywell Cooling System Fans is to ensure a uniformly mixed post accident primary containment atmosphere. LCO 3.6.3.1 requires that two Drywell Cooling System Fans shall be operable. One Drywell Cooling System Fan, and associated subsystem components, is needed to perform the mitigating system safety function. When both required Drywell Cooling System Fans are inoperable, Required Action B.1 requires operators to verify by administrative means that a hydrogen control function is maintained in the primary containment, and Required Action B.2 requires operators to restore one required Drywell Cooling System Fan to operable status. The Completion Time for Required Action B.1 is within 1 hour and once per 12 hours thereafter, while the Completion Time for Required Action B.2 is within 7 days. The license amendment request proposes to eliminate Required Action B.1. As a result of the proposed revision, operators would only be required to restore one required Drywell Cooling System Fan to operable status within 7 days when two required Drywell Cooling System Fans are inoperable.

The NRC staff considered the consequences of having two required Drywell Cooling System Fans inoperable for 7 days without operators having to verify by administrative means that a hydrogen control function is maintained in the primary containment. Neither NUREG–1150, ''Severe Accident Risks: An Assessment for Five U.S. Nuclear Power Plants,'' nor the technical analyses in support of the risk-informed changes to 10 CFR 50.44, credit the function of the drywell fans in a beyond design-basis (i.e., severe) accident because the fans are deemed ineffective in preventing a challenge to containment integrity due to combustible gas accumulation in a deinerted containment. Because Mark I and II containments are inerted, the risk significance of keeping the atmosphere mixed to prevent hydrogen combustion is low. Based on the above discussion, and the limited time (7 days) that the Drywell Cooling System Fans would be unavailable, the NRC staff finds that the proposed revision to TS 3.6.3.1, ''Drywell Cooling System Fans,'' is acceptable.

4.0 State Consultation

In accordance with the Commission's regulations, the [Name of State] State official was notified of the proposed issuance of the amendment. The State official had [no] comments. [If comments were provided, they should be addressed here].

5.0 Environmental Consideration

The amendment changes a requirement with respect to installation or use of a facility component located within the restricted area as defined in 10 CFR Part 20. The NRC staff has determined that the amendment involves no significant increase in the amounts, and no significant change in the types, of any effluents that may be released offsite, and that there is no significant increase in individual or cumulative occupational radiation exposure. The Commission has previously issued a proposed finding that the amendment involves no significant hazards consideration, and there has been no public comment on such finding issued on [Date] ([ ] FR [ ]). Accordingly, the amendment meets the eligibility criteria for categorical exclusion set forth in 10 CFR 51.22(c)(9). Pursuant to 10 CFR 51.22(b) no environmental impact statement or environmental assessment needs to be prepared in connection with the issuance of the amendment.

6.0 Conclusion

The Commission has concluded, based on the considerations discussed above, that: (1) There is reasonable assurance that the health and safety of the public will not be endangered by operation in the proposed manner, (2) such activities will be conducted in compliance with the Commission's regulations, and (3) the issuance of the amendment will not be inimical to the common defense and security or to the health and safety of the public.

7.0 References

3. **Federal Register** Notice, Notice of Availability published on [DATE] ([ ] FR [ ]).

4. TSTF–478 Revision 2, ''BWR Technical Specification Changes that Implement the Revised Rule for Combustible Gas Control.''

Principal Contributors: [Brian Lee, Aron Lewin, Robert Palla]

Model No Significant Hazards Determination

Description of Amendment Request: The proposed amendment would delete TS 3.6.3.3, ''Containment Atmosphere Dilution (CAD) System'' and revise TS 3.6.3.1, ''Drywell Cooling System Fans,'' and the associated Bases, that will result in modifications to technical specification (TS) containment combustible gas control requirements as permitted by 10 CFR 50.44.

Basis for No Significant Hazards Determination: As required by 10 CFR 50.91(a), an analysis of the issue of no significant hazards consideration is presented below:

Criterion 1: The proposed change does not involve a significant increase in the probability or consequences of an accident previously evaluated.

The Containment Atmosphere Dilution (CAD) system is not an initiator to any accident previously evaluated. The TS Required Actions taken when a drywell cooling system fan is inoperable are not initiators to any accident previously evaluated. As a result, the probability of any accident previously evaluated is not significantly increased.

The revised 10 CFR 50.44 no longer defines a design basis accident (DBA) hydrogen release and the Commission has subsequently found that the DBA loss of coolant accident (LOCA) hydrogen release is not risk significant. In addition, CAD has been determined to be ineffective at mitigating hydrogen releases from the more risk significant beyond design basis accidents that could threaten containment integrity. Therefore, elimination of the CAD system will not significantly increase the consequences of any accident previously evaluated. The consequences of an accident while relying on the revised TS Required Actions for drywell cooling system fans are no different than the consequences of the same accidents under the current Required Actions. As a result, the consequences of any accident previously evaluated is not significantly increased.

Therefore, the proposed change does not involve a significant increase in the probability or consequences of an accident previously evaluated.

Criterion 2: The proposed change does not create the possibility of a new or different kind of accident from any accident previously evaluated.

No new or different accidents result from utilizing the proposed change. The proposed change permits physical alteration of the plant involving removal of the CAD system. The CAD system is not an accident precursor, nor does its existence or elimination have any adverse impact on the pre-accident state of the reactor core or post accident confinement of radionuclides within the containment building from any design basis event. The changes to the TS do not alter assumptions made in the safety analysis, but reflect changes to the design requirements allowed under the revised 10 CFR 50.44. The proposed change is consistent with the revised safety analysis assumptions.

Therefore, the proposed change does not create the possibility of a new or different kind of accident from any previously evaluated.

Criterion 3: The proposed change does not involve a significant reduction in a margin of safety.

The Commission has determined that the DBA LOCA hydrogen release is not risk significant, therefore is not required to be analyzed in a facility accident analysis. The proposed change reflects this new position and, due to remaining plant equipment, instrumentation, procedures, and programs that provide effective mitigation of and recovery from reactor accidents, including postulated beyond design basis events, does not result in a significant reduction in a margin of safety.

Therefore, the proposed change does not involve a significant reduction in a margin of safety.

Based on the above, the NRC concludes that the proposed change presents no significant hazards consideration under the standards set forth in 10 CFR 50.92(c), and, accordingly, a finding of ''no significant hazards consideration'' is justified.

[FR Doc. E7–22740 Filed 11–20–07; 8:45 am]

BILLING CODE 7590–01–P

NUCLEAR REGULATORY COMMISSION

Notice of Opportunity To Comment on Model Safety Evaluation on Technical Specification Improvement for B&W Reactor Plants To Risk-Inform Requirements Regarding Selected Required Action End-States Using the Consolidated Line Item Improvement Process

AGENCY: Nuclear Regulatory Commission.

ACTION: Request for comment.

SUMMARY: Notice is hereby given that the staff of the Nuclear Regulatory Commission (NRC) has prepared a model safety evaluation (SE) and model license amendment request (LAR) relating to changes to the end-state requirements for required actions in B&W reactor plants' technical specifications (TS). Current technical specification action requirements frequently require that the unit be brought to cold shutdown when the technical specification limiting condition for operation for a system has not been met. Depending on the system, and the affected safety function, the requirement to go to cold shutdown may not represent the most risk effective course of action. In accordance with a qualitative risk analysis that provides a basis for changes to the action requirement to shutdown, where appropriate the shutdown end-state is changed from cold shutdown to hot shutdown. The affected TS are:

3.3.5 Engineered Safety Feature Actuation System (ESFAS) Instrumentation.
3.3.6 ESFAS Manual Initiation.
3.4.6 Reactor Coolant System (RCS) Loops—MODE 4.
3.4.15 RCS Leakage Detection Instrumentation.
3.5.4 Borated Water Storage Tank (BWST).
3.6.2 Containment Air Locks.
3.6.3 Containment Isolation Valves.
3.6.4 Containment Pressure.
3.6.5 Containment Air Temperature.
3.6.6 Containment Spray and Cooling Systems.
3.7.7 Component Cooling Water System.
3.7.8 Service Water System.
3.7.9 Ultimate Heat Sink.
3.7.10 Control Room Emergency Ventilation System (CREVS).
3.7.11 Control Room Emergency Air Temperature Control System (CREATCS).
3.8.1 AC Sources—Operating.
3.8.4 DC Sources—Operating.
3.8.7 Inverters—Operating.
3.8.9 Distribution Systems—Operating.

The NRC staff has also prepared a model no significant hazards consideration (NSHC) determination relating to this matter. The purpose of these models is to permit the NRC to efficiently process amendments that propose to adopt technical specification changes, designated as TSTF–431, Revision 2, related to Topical Report BAW–2441, Revision 2, ''Risk Informed Justification for LCO End-State Changes,'' September 2006. Licensees of B&W nuclear power reactors to which the models apply could then request amendments utilizing the models and justifying the applicability of the SE and NSHC determination to their reactors. The NRC staff is requesting comments on the model SE, model LAR, and model NSHC determination prior to announcing their availability for referencing in license amendment applications.

DATES: The comment period expires December 21, 2007. Comments received after this date will be considered if it is practical to do so, but the Commission is able to ensure consideration only for comments received on or before this date.

ADDRESSES: Comments may be submitted either electronically or via U.S. mail.

Submit written comments to Chief, Rules and Directives Branch, Division of Administrative Services, Office of Administration, *Mail Stop:* T–6 D59, U.S. Nuclear Regulatory Commission, Washington, DC 20555–0001. Hand deliver comments to: 11545 Rockville Pike, Rockville, Maryland, between 7:45 a.m. and 4:15 p.m. on Federal workdays. Copies of comments received may be examined at the NRC's Public Document Room, 11555 Rockville Pike (Room O–1F21), Rockville, Maryland. Comments may be submitted by electronic mail to *CLIIP@nrc.gov.*

FOR FURTHER INFORMATION CONTACT: Timothy Kobetz, *Mail Stop:* O–12H2, Technical Specifications Branch, Division of Inspection & Regional Support, Office of Nuclear Reactor Regulation, U.S. Nuclear Regulatory Commission, Washington, DC 20555–0001, telephone 301–415–1932.

SUPPLEMENTARY INFORMATION:

Background

Regulatory Issue Summary 2000–06, ''Consolidated Line Item Improvement Process for Adopting Standard Technical Specification Changes for Power Reactors,'' was issued on March 20, 2000. The consolidated line item improvement process (CLIIP) is intended to improve the efficiency of NRC licensing processes, by processing proposed changes to the standard technical specifications (STS) in a manner that supports subsequent license amendment applications. The

CLIIP includes an opportunity for the public to comment on proposed changes to the STS after a preliminary assessment by the NRC staff and finding that the change will likely be offered for adoption by licensees. The CLIIP directs the NRC staff to evaluate any comments received for a proposed change to the STS and to either reconsider the change or announce the availability of the change for adoption by licensees. Licensees opting to apply for this TS change are responsible for reviewing the staff's evaluation, referencing the applicable technical justifications, and providing any necessary plant-specific information. Each amendment application made in response to the notice of availability will be processed and noticed in accordance with applicable NRC rules and procedures.

This notice solicits comment on changes to the end-state requirements for required actions, if risk is assessed and managed, for the primary purpose of accomplishing short-duration repairs which necessitated exiting the original Mode of operation. The change was proposed in Topical Report BAW–2441, Revision 2, ''Risk Informed Justification for LCO End-State Changes,'' September 2006. This change was proposed for incorporation into the standard technical specifications by the owners groups participants in the Technical Specification Task Force (TSTF) and is designated TSTF–431, Revision 2. TSTF–431, Revision 2, can be viewed on the NRC's web page at *http://www.nrc.gov/reactors/operating/licensing/techspecs.html.*

Applicability

This proposal to modify technical specification requirements by the adoption of TSTF–431, Revision 2, is applicable to all licensees of B&W plants. To efficiently process the incoming license amendment applications, the staff requests that each licensee applying for the changes proposed in TSTF–431, Revision 2, include Bases for the proposed TS consistent with the Bases proposed in TSTF–431, Revision 2. To efficiently process the incoming license amendment applications, the staff requests that each licensee applying for the changes proposed in TSTF–431, Revision 2, use the CLIIP. Licensees are not prevented from requesting an alternative approach or proposing the changes without the requested Bases and Bases control program. Variations from the approach recommended in this notice may require additional review by the NRC staff, and may increase the time and resources needed for the review. Significant variations from the approach, or inclusion of additional changes to the license, will result in staff rejection of the submittal. Instead, licensees desiring significant variations and/or additional changes should submit a LAR that does not claim to adopt TSTF–431, Revision 2.

Public Notices

This notice requests comments from interested members of the public within 30 days of the date of publication in the **Federal Register**. After evaluating the comments received as a result of this notice, the staff will either reconsider the proposed change or announce the availability of the change in a subsequent notice (perhaps with some changes to the SE, LAR, or the proposed NSHC determination as a result of public comments). If the staff announces the availability of the change, licensees wishing to adopt the change must submit an application in accordance with applicable rules and other regulatory requirements. For each application, the staff will publish a notice of consideration of issuance of amendment to facility operating licenses, a proposed NSHC determination, and a notice of opportunity for a hearing. The staff will also publish a notice of issuance of an amendment to operating license to announce the modification of end-state requirements for required actions in plant technical specifications.

Proposed Model Plant Specific Safety Evaluation for Technical Specification Task Force (TSTF) Change TSTF–431, Revision 2, Change in Technical Specifications End-States (BAW–2441), a Consolidated Line Item Improvement

U.S. NUCLEAR REGULATORY COMMISSION SAFETY EVALUATION BY THE OFFICE OF NUCLEAR REACTOR REGULATION RELATED TO AMENDMENT NO. [_____] TO FACILITY OPERATING LICENSE NFP-[_____] [UTILITY NAME] [PLANT NAME], [UNIT _____] DOCKET NO. -[_____]

1.0 Introduction

By letter dated _____, 20____, [Utility Name] (the licensee) proposed changes to the technical specifications (TS) for [plant name]. The requested changes are the adoption of TSTF–431, Revision 2, to the B&W Reactor Standard Technical Specifications (STS) (NUREG–1430), which was proposed by the Technical Specifications Task Force (TSTF) on July 13, 2007, on behalf of the industry. TSTF–431, Revision 2, incorporates the B&W Owners Group (B&WOG) approved Topical Report BAW–2441, Revision 2, ''Risk Informed Justification for LCO End-State Changes,'' September 2006, (Reference 1), into the B&W STS (**Note:** The changes are made with respect to Revision 3 of the STS NUREGs).

TSTF–431, Revision 2, is one of the industry's initiatives developed under the Risk Management Technical Specifications (RMTS) program. These initiatives are intended to maintain or improve safety through the incorporation of risk assessment and management techniques in TS, while reducing unnecessary burden and making TS requirements consistent with the Commission's other risk-informed regulatory requirements, in particular the maintenance rule.

The Code of Federal Regulations, 10 CFR 50.36, ''Technical Specifications,'' states: ''When a limiting condition for operation of a nuclear reactor is not met, the licensee shall shut down the reactor or follow the remedial action permitted by the technical specification until the condition can be met.'' The STS and many plant TS provide a completion time (CT) for the plant to meet the limiting condition for operation (LCO). If the LCO or the remedial action cannot be met, then the reactor is required to be shut down. When the STS and individual plant technical specifications were written, the shutdown condition or end-state specified was usually cold shutdown.

Topical Report BAW–2441, Revision 2, provides the technical basis to change certain required end-states when the TS Actions for remaining in power operation cannot be met within the CTs. Most of the requested TS changes permit an end-state of hot shutdown (Mode 4), if risk is assessed and managed, rather than an end-state of cold shutdown (Mode 5) contained in the current TS. The request was limited to those end-states where: (1) Entry into the shutdown mode is for a short interval, (2) entry is initiated by inoperability of a single train of equipment or a restriction on a plant operational parameter, unless otherwise stated in the applicable TS, and (3) the primary purpose is to correct the initiating condition and return to power operation as soon as is practical.

The STS for B&W plants defines six operational modes. In general, they are:

- Mode 1—Power Operation: $K_{eff} \geq 0.99$ and power >5% RTP.
- Mode 2—Startup: $K_{eff} \geq 0.99$ and power ≤ 5% RTP.
- Mode 3—Hot Standby: $K_{eff} < 0.99$ and $T_{av} \geq$ [330]°F.
- Mode 4—Hot Shutdown: $K_{eff} < 0.99$ and [330]°F $\geq T_{av} \geq$ [200]°F.
- Mode 5—Cold Shutdown: $K_{eff} < 0.99$ and $T_{av} \leq$ [200]°F.

• Mode 6—Refueling: One or more reactor vessel head closure bolts are less than fully tensioned.

TSTF–431, Revision 2, generally allows a Mode 4 end-state rather than a Mode 5end-state for selected initiating conditions in order to perform short-duration repairs which necessitate exiting the original Mode of operation. The affected TS are:

3.3.5 Engineered Safety Feature Actuation System (ESFAS) Instrumentation.
3.3.6 ESFAS Manual Initiation.
3.4.6 Reactor Coolant System (RCS) Loops—MODE 4.
3.4.15 RCS Leakage Detection Instrumentation.
3.5.4 Borated Water Storage Tank (BWST).
3.6.2 Containment Air Locks.
3.6.3 Containment Isolation Valves.
3.6.4 Containment Pressure.
3.6.5 Containment Air Temperature.
3.6.6 Containment Spray and Cooling Systems.
3.7.7 Component Cooling Water System.
3.7.8 Service Water System.
3.7.9 Ultimate Heat Sink.
3.7.10 Control Room Emergency Ventilation System (CREVS).
3.7.11 Control Room Emergency Air Temperature Control System (CREATCS).
3.8.1 AC Sources—Operating.
3.8.4 DC Sources—Operating.
3.8.7 Inverters—Operating.
3.8.9 Distribution Systems—Operating.

2.0 Regulatory Evaluation

In 10 CFR 50.36, the Commission established its regulatory requirements related to the content of TS. Pursuant to 10 CFR 50.36(c), TS are required to include items in the following five specific categories related to plant operation: (1) Safety limits, limiting safety system settings, and limiting control settings; (2) limiting conditions for operation (LCOs); (3) surveillance requirements (SRs); (4) design features; and (5) administrative controls. The rule does not specify the particular requirements to be included in a plant's TS.

As stated in 10 CFR 50.36(c)(2)(i), the ''Limiting conditions for operation are the lowest functional capability or performance levels of equipment required for safe operation of the facility. When a limiting condition for operation of a nuclear reactor is not met, the licensee shall shut down the reactor or follow any remedial action permitted by the technical specifications * * * .''

BAW–2441–A, Revision 2, ''Risk-Informed Justification for LCO End-State Changes,'' September 2006 (Reference 1), provides justification for changes to the end-states of selected LCO from Mode 5, cold shutdown, to Mode 4, hot shutdown, in order to (1) reduce risk associated with unnecessary shutdown cooling (SDC) operations, and (2) reduce plant unavailability associated with reduced plant downtime caused by unnecessary cooldown to Mode 5 and subsequent reheat to Mode 3 or 4. Reference 1 provides both a qualitative assessment and a quantitative analysis to confirm that Mode 4 is the preferred end-state from a risk and operational perspective. The qualitative assessment describes the risk associated with operation in Mode 4 compared to operation in Mode 5, in order to justify that the end-state of Mode 4, versus Mode 5, for the proposed LCO conditions invoked, is acceptable. The qualitative assessment concludes that the risk advantages associated with Mode 4 operation versus Mode 5 operation are that: More initiating event mitigating resources are available; human error during SDC initiation and subsequent operation cannot occur; SDC vulnerabilities are avoided; and inadvertent RCS draining via SDC system related misalignments cannot occur.

Most of today's TS and the design basis analyses were developed based on the perception that putting a plant in cold shutdown would result in the safest condition and that the design basis analyses would bound credible shutdown accidents. In the late 1980s and early 1990s, the NRC and licensees recognized that this perception was incorrect and took corrective actions to improve shutdown operation. At the same time, standard TS were developed and many licensees improved their TS. Since enactment of a shutdown rule was expected, almost all TS changes involving power operation, including a revised end-state requirement, were postponed (see, e.g., the Final Policy Statement on TS Improvements (Reference 2)). However, in the mid 1990s, the Commission decided a shutdown rule was not necessary in light of industry improvements.

Controlling shutdown risk encompasses control of conditions that can cause potential initiating events and responses to those initiating events that may occur. Initiating events are a function of equipment malfunctions and human error. Responses to events are a function of plant sensitivity, ongoing activities, human error, defense-in-depth, and additional equipment malfunctions.

In practice, the risk during shutdown operations is often addressed via voluntary actions and application of 10 CFR 50.65 (Reference 3), the maintenance rule. Section 50.65(a)(4) states: ''Before performing maintenance activities * * * the licensee shall assess and manage the increase in risk that may result from the proposed maintenance activities. The scope of the assessment may be limited to structures, systems, and components that a risk-informed evaluation process has shown to be significant to public health and safety.'' Regulatory Guide (RG) 1.182 (Reference 4) provides guidance on implementing the provisions of 10 CFR 50.65(a)(4) by endorsing the revised Section 11 (published separately) to NUMARC 93–01, Revision 2. That section was subsequently incorporated into Revision 3 of NUMARC 93–01 (Reference 5). However, Revision 3 has not yet been formally endorsed by the NRC.

The changes in TSTF–431 are consistent with the rules, regulations and associated regulatory guidance, as noted above.

3.0 Technical Evaluation

The changes proposed in TSTF–431, Revision 2, are consistent with the changes proposed and justified in Topical Report BAW–2441, Revision 2, as approved by the associated NRC SE (Reference 6). The evaluation included in Reference 6, as appropriate and applicable to the changes of TSTF–431, Revision 2 (Reference 7), is reiterated herein.

In its application, the licensee shall commit to TSTF–IG–07–01, Implementation Guidance for TSTF–431, Revision 1, ''Change in Technical Specifications End-States (BAW–2441),'' (Reference 8), which addresses a variety of issues. An overview of the generic evaluation and associated risk assessment is provided below, along with a summary of the associated TS changes justified by Reference 1.

3.1 Risk Assessment

The objective of the BAW–2441, Revision 2, (Reference 1) risk assessment was to show that any risk increases associated with the proposed changes in TS end-states are either negligible or negative (i.e., a net decrease in risk).

BAW–2441, Revision 2, documents a risk-informed analysis of the proposed TS change. Probabilistic Risk Assessment (PRA) results and insights were used, in combination with results of deterministic assessments, to identify and propose changes in ''end-states'' for B&W plants. This is in accordance with guidance provided in RG 1.174 (Reference 9) and RG 1.177 (Reference 10). The three-tiered approach documented in RG 1.177, ''An Approach for Plant-Specific, Risk-Informed Decision Making: Technical Specifications,'' was followed. The first tier of the three-tiered approach

includes the assessment of the risk impact of the proposed change for comparison to acceptance guidelines consistent with the Commission's Safety Goal Policy Statement, as documented in RG 1.174 ''An Approach for Using Probabilistic Risk Assessment in Risk-Informed Decisions on Plant-Specific Changes to the Licensing Basis.'' In addition, the first tier aims at ensuring that there are no unacceptable temporary risk increases during the implementation of the proposed TS change, such as when equipment is taken out of service. The second tier addresses the need to preclude potentially high-risk configurations which could result if equipment is taken out of service concurrently with the implementation of the proposed TS change. The third tier addresses the application of a configuration risk management program (CRMP), implemented to comply with 10 CFR 50.65(a)(4) of the Maintenance Rule, for identifying risk-significant configurations resulting from maintenance-related activities and taking appropriate compensatory measures to avoid such configurations. Unless invoked, such as by this or another TS application, 50.65(a)(4) is applicable to maintenance-related activities and does not cover other operational activities beyond the effect they may have on existing maintenance related risk.

The risk assessment approach of BAW–2441, Revision 2, was found acceptable in the SE for the topical report. In addition, the analyses show that the the three-tiered approach criteria for allowing TS changes are met as follows:

• *Risk Impact of the Proposed Change (Tier 1).* The risk changes associated with the TS changes in TSTF–431, in terms of mean yearly increases in core damage frequency (CDF) and large early release frequency (LERF), are risk neutral or risk beneficial. In addition, there are no significant temporary risk increases, as defined by RG 1.177 criteria, associated with the implementation of the TS end-state changes.

• *Avoidance of Risk-Significant Configurations (Tier 2).* The performed risk analyses, which are based on single LCOs, show that there are no high-risk configurations associated with the TS end-state changes. The reliability of redundant trains is normally covered by a single LCO. To provide assurance that risk-significant plant equipment outage configurations will not occur when specific equipment is out of service, as part of the implementation of TSTF–431, the licensee will commit to follow Section 11 of NUMARC 93–01, Revision 3, and to include guidance in appropriate plant procedures and/or administrative controls to preclude high-risk plant configurations when the plant is at the proposed end-state. The staff finds that such guidance is adequate for preventing risk-significant plant configurations.

• *Configuration Risk Management (Tier 3).* The licensee shall have a program, the CRMP, in place to comply with 10 CFR 50.65(a)(4) to assess and manage the risk from proposed maintenance activities. This program can be used to support a licensee decision in selecting the appropriate actions to control risk for most cases in which a risk-informed TS is entered. When multiple LCOs occur, which affect trains in several systems, the plant's risk-informed CRMP, implemented in response to the Maintenance Rule 10 CFR 50.65(a)(4), shall ensure that high-risk configurations are avoided. In addition, to the extent that the plant PRA is utilized in the CRMP, the plant PRA quality will be assessed in accordance with NRC Regulatory Issue Summary 2007–06, ''Regulatory Guide 1.200 Implementation,'' (Reference 11).

The generic risk impact of the proposed end-state mode change was evaluated subject to the following assumptions:

1. The entry into the proposed end-state is initiated by the inoperability of a single train of equipment or a restriction on a plant operational parameter, unless otherwise stated in the applicable technical specification.

2. The primary purpose of entering the end-state is to correct the initiating condition and return to power as soon as practical.

3. Plant implementation guidance for the proposed end-state changes is developed to ensure that insights and assumptions made in the risk assessment are properly reflected in the plant-specific CRMP.

These assumptions are consistent with typical entries into Mode 4 for short duration repairs, which is the intended use of the TS end-state changes.

The staff concludes that, in general, going to Mode 4 (hot shutdown) instead of going to Mode 5 (cold shutdown) to carry out equipment repairs does not have any adverse effect on plant risk.

3.2 Assessment of TS Changes

The changes proposed by the licensee and in TSTF–431, Revision 2, are consistent with the changes proposed in topical report BAW–2441, Revision 2, and approved by the NRC SE of August 25, 2006. [**NOTE:** Only those changes proposed in TSTF–431, Revision 2, are addressed in this SE. The SE and associated topical report address the entire fleet of B&W plants, and the plants adopting TSTF–431, Revision 2, must confirm the applicability of the changes to their plant.] Following are the proposed changes, including a synopsis of the STS LCO, the change, and a brief conclusion of acceptability.

3.2.1 TS 3.3.5 Engineering Safety Features Actuation System (ESFAS) Instruments

ESFAS instruments initiate high pressure injection (HPI), low pressure injection (LPI), containment spray and cooling, containment isolation, and onsite standby power source start. ESFAS also provides a signal to the Emergency Feedwater Isolation and Control (EFIC) System. This signal initiates emergency feed water (EFW) when HPI is initiated. All functions associated with these systems, structures and components (SSCs) can be initiated via operator action. This may be accomplished at the channel level or the individual component level.

LCO: Three channels of ESFAS instrumentation for the applicable parameters shall be operable in each ESFAS train.

Condition Requiring Entry into End-State: This proposed end-state change is associated with LCO 3.3.5 Condition B, Required Action B.2.3 and addresses only the reactor building (RB) High Pressure and RB High-High Pressure setpoints. Specifically, if two or more channels are inoperable or one channel is inoperable and the required action is not met, then the Mode 5 end-state is prescribed within 36 hours subsequent to an initial cooldown to Mode 3 within 6 hours.

Proposed Modification for End-State Required Actions: The end-state associated with Required Action B.2.3 of this LCO is being proposed to be changed from Mode 5 within 36 hours to Mode 4 within 12 hours.

Assessment and Finding: When operating in Mode 4, the reactor system thermal-hydraulic conditions are very different from those associated with a design basis accident (DBA) (at-power). That is, the energy in the RCS is only that associated with decay heat in the core and the stored energy in the reactor coolant system (RCS) components and RCS pressure is reduced (especially toward the lower end of Mode 4). This means that the likelihood of an initiating event (IE) occurring, for which ESFAS would provide mitigating functions, is greatly reduced when operating in Mode 4. Nonetheless, all

redundant functions initiated by ESFAS can be manually initiated to mitigate transients that will proceed more slowly and with reduced challenge to the reactor and containment systems than those associated with at-power operations. Also, when operating toward the lower end of Mode 4, with the steam generators (SGs) in operation and SDC not in operation, risk is reduced; risk associated with shutdown cooling (SDC) operation is avoided. When operating in Mode 4 there are more mitigation systems (e.g., HPI and EFW/auxiliary feed water (AFW)) available to respond to IEs that could challenge RCS inventory or decay heat removal, than when operating in Mode 5. These systems include the HPI system and EFW/AFW systems. Based on the above analysis, the staff finds that the above requested change is acceptable.

3.2.2 TS 3.3.6 ESFAS Manual Initiation

The ESFAS manual initiation capability allows the operator to actuate ESFAS functions from the main control room in the absence of any other initiation condition. Manually actuated functions include HPI, LPI, containment spray and cooling, containment isolation, and control room isolation. The ESFAS manual initiation ensures that the control room operator can rapidly initiate Engineered Safety Features (ESF) functions at any time. In the absence of manual ESFAS initiation capability, the operator can initiate any and all ESF functions individually at a lower level.

LCO: Two manual initiation channels of each one of the following ESFAS functions shall be operable: HPI, LPI, RB Cooling, RB Spray, RB Isolation, and Control Room Isolation.

Conditions Requiring Entry into End-State: This proposed end-state change is associated with LCO 3.3.6 Condition B, Required Action B.2. Specifically, if one or more ESFAS functions with one channel are inoperable and the required action and associated completion time are not met, then Mode 3 is prescribed within 6 hours and Mode 5 within 36 hours.

Proposed Modification for End-State Required Actions: The end-state associated with Required Action B.2 of this LCO is being proposed to be changed from Mode 5 within 36 hours to Mode 4 within 12 hours.

Assessment and Finding: When operating in Mode 4, the thermal-hydraulic conditions are very different than those associated with a DBA (at-power). That is, the energy in the RCS is only that associated with decay heat in the core and the stored energy in the RCS components and RCS pressure is reduced (especially toward the lower end of Mode 4). This means that the likelihood of an IE occurring, for which ESFAS manual initiation would provide mitigating functions, is greatly reduced when operating in Mode 4. Nonetheless, all redundant functions initiated by ESFAS manual initiation can be manually initiated via individual component controls. In this way, transients, that will proceed more slowly and with reduced challenge to the reactor and containment systems than those associated with at-power operations, will be mitigated. Also, when operating toward the lower end of Mode 4, with the SGs in operation and SDC not in operation, risk is reduced (i.e., the risk associated with SDC avoided). When operating in Mode 4 there are more mitigation systems (e.g. HPI and EFW/AFW) available to respond to IEs that could challenge RCS inventory or decay heat removal, than when operating in Mode 5. These systems include the HPI system and EFW/AFW systems. Based on the above assessment, the staff finds that the above requested change is acceptable.

3.2.3 TS 3.4.6 RCS Loops—MODE 4

The purpose of this LCO is to provide forced flow from at least one RCP or one decay heat removal (DHR) pump for core decay heat removal and transport. This LCO allows the two loops that are required to be operable to consist of any combination of RCS or DHR system loops. Any one loop in operation provides enough flow to remove the decay heat from the core. The second loop that is required to be operable provides redundant paths for heat removal. An ancillary function of the RCS and/or DHR loops is to provide mixing of boron in the RCS. When operating in Mode 4 if both RCS loops and one DHR loop is inoperable, the existing LCO requires cooldown to Mode 5. In this situation, SGs are available for core heat removal and transport via natural circulation (NC) in Mode 4 without a need for significant RCS heatup. Proceeding to Mode 5 makes few if any additional systems available for decay heat removal (assuming a failure of the remaining DHR/LPI system). The one system that can be made available in Mode 5 to provide backup to the DHR system is the Borated Water Storage Tank (BWST). It can provide gravity draining to the RCS after cooldown to Mode 5 and subsequent RCS drain down and removal of SG primary side manway covers. This would require a considerable time delay, during which RC temperature would be increasing.

LCO: Two loops consisting of any combination of RCS loops and DHR loops shall be operable and one loop shall be in operation.

Condition Requiring Entry into End-State: This proposed end-state change is associated with LCO 3.4.6 Condition A, Required Action A.2. Specifically, if one required loop is inoperable, then action is taken immediately to restore a second loop to operable status. Further, if the remaining operable loop is a DHR loop, then entry into Mode 5 is required within 24 hours.

Proposed Modification for End-State Required Actions: It is proposed that Required Action A.2 be deleted, thus allowing continued operations in Mode 4.

Assessment and Finding: When operating in Mode 4, if both RCS loops and one DHR loop are inoperable, the existing LCO requires cooldown to Mode 5. In this situation, SGs are available for core heat removal and transport via NC in Mode 4 without the need for significant RCS heatup. Proceeding to Mode 5 makes few if any additional systems available for decay heat removal (assuming a failure of the remaining DHR system). The one system that can be made available in Mode 5 to provide backup to the DHR system is the BWST. It can provide gravity draining to the RCS after cooldown to Mode 5 and subsequent RCS drain down and removal of SG primary side manway covers. This would require a considerable time delay, during which RC temperature would be increasing. Given these considerations and magnitude of feedwater systems available to feed the SGs, continued use of SGs for this situation will adequately cool the core while avoiding the additional risk associated with SDC. RC boron concentration will have been adjusted prior to cooldown to Mode 4 to provide 1% shutdown margin (SDM) at the target cooldown temperature. Thus, boron concentration adjustments would not be necessary; RC boron would be sufficiently mixed to an equilibrium concentration by this time. When operating in Mode 4 there are more mitigation systems available to respond to IEs that could challenge RCS inventory or decay heat removal, than when operating in Mode 5. These systems include the HPI system and EFW/AFW systems. Based upon the above assessment, the staff finds that the above requested change is acceptable.

3.2.4 TS 3.4.15 RCS Leakage Detection Instrumentation

One method of protecting against large RCS leakage derives from the ability of instruments to rapidly detect

extremely small leaks. This LCO requires instruments of diverse monitoring principles to be operable to provide a high degree of confidence that extremely small leaks are detected in time to allow actions to place the plant in a safe condition when RCS leakage indicates possible RC pressure boundary (RCPB) degradation. The LCO requirements are satisfied when monitors of diverse measurement means are available.

LCO: The following RCS leakage detection instrumentation shall be operable:

a. One containment sump monitor and

b. One containment atmosphere radioactivity monitor (gaseous or particulate).

Conditions Requiring Entry into End-State: This proposed end-state change is associated with LCO 3.4.15 Condition C, Required Action C.2. Specifically, if either the sump monitor or containment atmosphere radioactivity monitor are inoperable and cannot be restored to operability within 30 days, then Mode 3 is prescribed within 6 hours and Mode 5 within 36 hours.

Proposed Modification for End-State Required Actions: The end-state associated with Required Action C.2 of this LCO is being proposed to be changed from Mode 5 within 36 hours to Mode 4 within 12 hours.

Assessment and Finding: Due to reduced RCS pressures when operating in Mode 4, especially toward the lower end of Mode 4, the likelihood of occurrence of a LOCA is very small; LOCA IE frequencies are reduced compared to at-power operation. Because of this and because the reactor is shutdown with significant radionuclide decay having occurred, the probability of occurrence of a LOCA is decreased while the consequence of such an event is not increased. Additional instruments are available to provide secondary indication of a LOCA, e.g., additional containment radioactivity monitors, grab samples of containment atmosphere, humidity, temperature and pressure. Plant risk is lower when operating in Mode 4 (not on SDC) than when operating in Mode 5; risk associated with SDC operation is avoided. When operating in Mode 4 (not on SDC) there are more mitigation systems (e.g., HPI and EFW/AFW) available to respond to lEs that could challenge RCS inventory or decay heat removal, than when operating in Mode 5. Based upon the above assessment, the staff finds that the above requested change is acceptable.

3.2.5 TS 3.5.4 Borated Water Storage Tank (BWST)

The BWST supports the emergency core cooling system (ECCS) and the RB spray (RBS) system by providing a source of borated water for ECCS and containment spray pump operation. The BWST supplies two ECCS trains, each by a separate, redundant supply header. Each header also supplies one train of RBS . A normally open, motor operated isolation valve is provided in each header to allow the operator to isolate the BWST from the ECCS after the ECCS pump suction has been transferred to the containment sump following depletion of the BWST during a LOCA. The ECCS and RBS are provided with recirculation lines that ensure each pump can maintain minimum flow requirements when operating at shutoff head conditions. This LCO ensures that: the BWST contains sufficient borated water to support the ECCS during the injection phase, sufficient water volume exists in the containment sump to support continued operation of the ECCS and containment spray pumps at the time of transfer to the recirculation mode of cooling, and the reactor remains subcritical following a LOCA. Insufficient water inventory in the BWST could result in insufficient cooling capacity of the ECCS when the transfer to the recirculation mode occurs. Improper boron concentrations could result in a reduction of SDM or excessive boric acid precipitation in the core following a LOCA, as well as excessive caustic stress corrosion of mechanical components and systems inside containment.

LCO: The BWST shall be operable.

Condition Requiring Entry into End-State: This proposed end-state change is associated with LCO 3.5.4 Condition C, Required Action C.2. Specifically, if boron concentration is not within limits for 8 hours, then Mode 3 is prescribed within 6 hours and Mode 5 within 36 hours.

Proposed Modification: The end-state associated with Required Action C.2, as it relates to the boron concentration requirement of this LCO, is being proposed to be changed from Mode 5 within 36 hours to Mode 4 within 12 hours. No change is being proposed for the water temperature requirement of the LCO. The end-state associated with existing C.2 is proposed to be changed as follows:

4. Split existing Condition A into two conditions (A and C) such that boron concentration and water temperature are addressed separately, i.e., Condition A would address boron concentration and Condition C would address water temperature. In either case the Required Action, i.e., A.1 and C.1, would be to restore the BWST to operable status within 8 hours.

5. A new Condition B would address boron concentration not within limits and the Required Action and associated Completion Time not met. Required Action B.1 would be to be in Mode 3 within 6 hours and B.2 would be to be in Mode 4 within 12 hours.

6. Existing Condition B would be renamed Condition D and would address BWST inoperable for reasons other than Conditions A or C with a Required Action D.1 to restore the BWST to operable status within I hour.

Existing Condition C would be renamed Condition E and would address Required Action and associated Completion Time for Conditions other than Condition C or D not met. It would have the Required Action to be in Mode 3 within 6 hours and Mode 5 within 36 hours.

Assessment and Finding: The limit for minimum boron concentration in the BWST was established to ensure that, following a DBA large break loss of coolant accident (LBLOCA), with a minimum BWST level, the reactor will remain shut down in the cold condition following mixing of the BWST and RCS water volumes. LBLOCA accident analyses assume that all control rods remain withdrawn from the core. When operating in Mode 4, the control rods will either be inserted or the regulating rod groups will be inserted with one or more of the safety rod groups cocked and armed for automatic RPS insertion. Hence, all rods will not be out should an IE occur. Also, given the highly unlikely possibility of a LBLOCA occurring, it can be assumed all control rods will be inserted should an IE occur while in Mode 4. This provides for the reactor shutdown margin to be very conservative, i.e., in excess of approximately $-9.0\%\ \Delta k/k$. For these reasons, and the design basis assumptions that (a) deviations in boron concentration will be relatively slow and small and that (b) boric acid addition systems would normally be available (can be powered by [onsite standby power sources]), the staff finds that the above requested change is acceptable.

3.2.6 TS 3.6.2 Containment Air Locks

Containment air locks form part of the containment pressure boundary and provide a means for personnel access during all modes of operation. As such, air lock integrity and leak tightness is essential for maintaining the containment leakage rate within limits in the event of a DBA. Each air lock is

fitted with redundant seals and doors as a design feature for mitigating the DBA. When operating in Mode 4 the energy that can be released to the RB is a fraction of that which would be released for a DBA. Also, the redundant containment spray and cooling systems, required to be operable in Mode 4 but not in Mode 5, will be available to ensure that containment pressure remains low should a LOCA occur.

LCO: Two containment air locks shall be operable.

Condition Requiring Entry into End-State: This proposed end-state change is associated with LCO 3.6.2 Condition D, Required Action D.2. Specifically, if one or more containment air locks are inoperable for reasons other than condition A or B, then restore the air lock to operable within 24 hours or Mode 3 is prescribed within 6 hours and Mode 5 within 36 hours.

Proposed Modification for End-State Required Actions: The end-state associated with Required Action D.2 of this LCO is being proposed to be changed from Mode 5 within 36 hours to Mode 4 within 12 hours.

Assessment and Finding: The energy that can be released to the RB when operating in Mode 4 is only a fraction of that associated with a DBA, thus RB pressure will be only slightly higher should a LOCA occur when operating in Mode 4 as compared to operating in Mode 5. Required Action C.2 requires at least one air lock door to be closed, which combined with reduced RB pressure should result in small containment air lock leakage. Also, significant radionuclide decay will have occurred, i.e., due to plant shutdown. For these reasons, no increase in large early release frequency (LERF) is expected. In the unlikely event that at least one door cannot be closed, evaluation of the effect on plant risk and implementation of any required compensatory measures will be accomplished in accordance with 10 CFR 50.65, i.e., the ''Maintenance Rule.'' Plant risk is lower when operating in Mode 4 (not on SDC) than when operating in Mode 5 because there are more mitigation systems (e.g., HPI and EFW/AFW) available to respond to IEs that could challenge RCS inventory or decay heat removal. Also, the likelihood of occurrence of a LOCA is very remote, thus the probability of occurrence of a LOCA is decreased while the consequence of such and event is not increased, and the staff finds that the above requested change is acceptable.

3.2.7 TS 3.6.3 Containment Isolation Valves (CIVs)

The CIVs form part of the containment pressure boundary and provide a means for fluid penetrations not serving accident consequence limiting systems to be provided with two isolation barriers that are closed on an automatic isolation signal. Two barriers in series are provided for each penetration so that no single credible failure or malfunction of an active component can result in a loss of isolation or leakage that exceeds limits assumed in the safety analyses. One of these barriers may be a closed system. These barriers (typically CIVs) make up the Containment Isolation System. Containment isolation occurs upon receipt of a high containment pressure or diverse containment isolation signal. The containment isolation signal closes automatic containment isolation valves in fluid penetrations not required for operation of ESF to prevent leakage of radioactive material. Upon actuation of HPI, automatic containment valves also isolate systems not required for containment or RCS heat removal. Other penetrations are isolated by the use of valves in the closed position or blind flanges. As a result, the CIVs (and blind flanges) help ensure that the containment atmosphere will be isolated in the event of a release of radioactive material to containment atmosphere from the RCS following a DBA. Operability of the containment isolation valves (and blind flanges) supports containment operability during accident conditions. The operability requirements for containment isolation valves help ensure that containment is isolated within the time limits assumed in the safety analyses. Therefore, the operability requirements provide assurance that the containment function assumed in the safety analyses will be maintained. When operating in Mode 4, there is decreased potential for challenges to the containment than assumed in the licensing basis; thus, containment pressures associated with lEs that transfer energy to the containment will be only slightly higher when operating in Mode 4 versus operating in Mode 5. When operating in Mode 4, versus Mode 5, there are more systems available to mitigate precursor events, e.g., loss of feedwater and LOCA, that could cause potential challenges to containment; also, potential fission product release is reduced due to radionuclide decay.

LCO: Each containment isolation valve shall be operable.

Condition Requiring Entry into End-State: This proposed end-state change is associated with LCO 3.6.3 Condition E, Required Action E.2. Specifically, if the required action and associated completion time cannot be met for penetration flow paths with inoperable isolation valves or RB purge valve leakage limits (Conditions A, B, C and Required Actions A.1, A.2, B.1, C.1 and C.2), then Mode 3 is prescribed within 6 hours and Mode 5 within 36 hours.

Proposed Modification for End-State Required Actions: The end-state associated with Required Action E.2 of this LCO is being proposed to be changed from Mode 5 within 36 hours to Mode 4 within 12 hours.

Assessment and Finding: When in Mode 4 (not on SDC) there are more mitigation systems available to respond to IEs that could challenge RCS inventory or decay heat removal, than when operating in Mode 5. The redundant RBS and RB cooling systems will be available to ensure that containment pressure remains low should a LOCA occur. Because the energy that can be released to the RB when operating in Mode 4 is only a fraction of that associated with a DBA, RB pressure will be only slightly higher should a LOCA occur when operating in Mode 4 as compared to when operating in Mode 5. For these reasons, containment leakage associated with CIVs is small, and with the plant shutdown significant radionuclide decay will have occurred, therefore no increase in LERF is expected. Due to reduced RCS pressures when operating in Mode 4, especially toward the lower end of Mode 4, the likelihood of occurrence of a LOCA is very small, i.e., LOCA IE frequencies are reduced compared to at-power operation. The probability of occurrence of a LOCA is decreased while the consequence of such an event is not increased. Thus, plant risk is lower when operating in Mode 4 (not on SDC) than when operating in Mode 5; risk associated with SDC operation is avoided. Therefore, the staff finds that the above requested change is acceptable.

3.2.8 TS 3.6.4 Containment Pressure

The containment pressure is limited during normal operation to preserve the initial conditions assumed in the accident analyses for a LOCA or steam line break (SLB). The containment air pressure limit also prevents the containment pressure from exceeding the containment design negative pressure differential with respect to the outside atmosphere in the event of inadvertent actuation of the containment spray system. Maintaining containment pressure less than or equal to the LCO upper pressure limit (in

conjunction with maintaining the containment temperature limit) ensures that: in the event of a DBA, the resultant peak containment accident pressure will remain below the containment design pressure; the containment environmental qualification operating envelope is maintained; and, the ability of containment to perform its design function is ensured. The containment high pressure limit is an initial condition used in the DBA analyses to establish the maximum peak containment internal pressure. Because only a small percentage of the energy assumed for the DBA could be released to the containment, this limit is overly conservative during operations in Mode 4. The low containment pressure limit is based on inadvertent full (both trains) actuation of the RB spray system. Invoking any condition associated with the LCOs being proposed for an end-state change cannot initiate this event; however, should it occur, there is ample time for operator response to mitigate it.

LCO: Containment pressure shall be ≥[-2.0] PSIG and ≤ [+3.0] PSIG.

Condition Requiring Entry into End-State: This proposed end-state change is associated with LCO 3.6.4 Condition B, Required Action B.2. Specifically, if containment pressure exceeds the limit and cannot be restored within one hour, then Mode 3 is prescribed within 6 hours and Mode 5 within 36 hours.

Proposed Modification for End-State Required Actions: The end-state associated with Required Action B.2 of this LCO is being proposed to be changed from Mode 5 within 36 hours to Mode 4 within 12 hours.

Assessment and Finding: The redundant RBS and RB cooling systems will be available to ensure that containment pressure remains low should a LOCA occur. Because the energy that can be released to the RB when operating in Mode 4 is only a fraction of that associated with a DBA, RB pressure will be only slightly higher should a LOCA occur when operating in Mode 4 as compared to when operating in Mode 5. In such a situation, the margin to the RB design pressure will be large, i.e., on the order of several tens of PSI. Also, the occurrence of a LOCA of any kind during operation in Mode 4 is considered highly unlikely. Because of this and the occurrence of significant radionuclide decay (i.e., the plant has been shutdown), no increase in LERF is expected should the LCO for high containment pressure be invoked while in Mode 4. This is especially germane considering that operations personnel will commence actions to restore RB pressure to within the limit immediately upon notification that it has exceeded the limit. RB vacuum conditions will not compromise containment integrity of large dry containment of either pre-stressed or reinforced concrete designs. One plant has a steel containment configuration fitted with a vacuum breaker to mitigate vacuum conditions. The risk associated with Mode 4 operation and RB pressure below the LCO low pressure limit coincident with inadvertent RB spray actuation is considered to be so low as to be inconsequential (a search of available data bases found no record of this situation having occurred to date at any B&W design plants). Also, operations personnel will commence actions to restore RB pressure to within the limit on notification that it has exceeded the limit.

Plant risk is lower when operating in Mode 4 (not on SDC) than when operating in Mode 5; risk associated with SDC operation is avoided. Also, when operating in Mode 4 (not on SDC) there are more mitigation systems (e.g., HPI and EFW/AFW) available to respond to an IE that could challenge RCS inventory or decay heat removal, than when operating in Mode 5. These considerations ultimately lead to reduced challenges to the RB when operating in Mode 4 versus Mode 5, and therefore the staff finds that the above requested change is acceptable.

3.2.9 TS 3.6.5 Containment Air Temperature

The containment average air temperature is limited during normal operation to preserve the initial conditions assumed in the accident analyses for a LOCA or SLB. The containment average air temperature limit is derived from the input conditions used in the containment functional analyses and the containment structure external pressure analysis. This LCO ensures that initial conditions assumed in the analysis of a DBA are not violated during unit operations. The total amount of energy to be removed from the RB Cooling system during post accident conditions is dependent upon the energy released to the containment due to the event as well as the initial containment temperature and pressure. The higher the initial temperature, the higher the resultant peak containment pressure and temperature. Exceeding containment design pressure may result in leakage greater than that assumed in the accident analysis. Operation with containment temperature in excess of the LCO limit violates an initial condition assumed in the accident analysis. The limit for containment average air temperature ensures that operation is maintained within the assumptions used in the DBA analysis for containment; LOCA results in the greatest sustained increase in containment temperature. By maintaining containment air temperature at less than the initial temperature assumed in the LOCA analysis, the reactor building design condition will not be exceeded. As a result, the ability of containment to perform its design function is ensured.

LCO: Containment average air temperature shall be < [130]°F.

Condition Requiring Entry into End-State: This proposed end-state change is associated with LCO 3.6.5 Condition B, Required Action B.2. Specifically, if containment air temperature exceeds the limit and cannot be restored within 8 hours, then Mode 3 is prescribed within 6 hours and Mode 5 within 36 hours.

Proposed Modification for End-State Required Actions: The end-state associated with Required Action B.2 of this LCO is being proposed to be changed from Mode 5 within 36 hours to Mode 4 within 12 hours.

Assessment and Finding: The redundant RBS and RB cooling systems will be available to ensure that containment temperature remains low should a LOCA occur. Because the energy that can be released to the RB when operating in Mode 4 is only a fraction of that associated with a DBA, the attendant RB temperature (and associated pressure) rise will be well below that associated with a DBA. Also, the occurrence of a LOCA of any kind during operation in Mode 4 is considered highly unlikely. For these reasons and because of the occurrence of significant radionuclide decay (i.e., the plant has been shut down), no increase in LERF is expected. Plant risk is lower when operating in Mode 4 (not on SDC) than when operating in Mode 5; risk associated with SDC operation is avoided. Also, when operating in Mode 4 (not on SDC) there are more mitigation systems (e.g., HPI and EFV/AFW) available to respond to an IE that could challenge RCS inventory or decay heat removal, than when operating in Mode 5. These considerations ultimately lead to reduced challenges to the RB when operating in Mode 4 versus Mode 5. Therefore, the staff finds that the above requested change is acceptable.

3.2.10 TS 3.6.6 Containment Spray and Cooling Systems

The containment spray and cooling systems provide containment atmosphere cooling to limit post accident pressure and temperature in containment to less than the design values. Reduction of containment

pressure and the iodine removal capability of the spray reduces the release of fission product radioactivity from containment to the environment, in the event of a DBA. When operating in Mode 4, the release of stored energy to the RB can be only a small fraction of the energy associated with a DBA. This, along with the fact there are redundant trains of containment spray and cooling, assures this engineered safety feature (ESF) will be supported during operation in Mode 4. Also, the function associated with containment spray iodine removal capability will be less challenged when operating in Mode 4 due to radionuclide decay.

LCO: Two containment spray trains and two containment cooling trains shall be operable.

Condition Requiring Entry into End-State: This proposed end-state change is associated with LCO 3.6.6 Condition B, Required Action B.2 (containment spray system) and Condition F, Required Action F.2 (containment cooling system). Specifically: if one containment spray train is inoperable and cannot be restored within 72 hours or within 10 days of discovery of failure to meet the LCO, then Mode 3 is prescribed within 6 hours and Mode 5 within 84 hours; and, if two containment cooling trains are inoperable and cannot be restored within 72 hours, then Mode 3 is prescribed within 6 hours and Mode 5 within 36 hours.

Proposed Modification for End-State Required Actions: The end-state associated with Required Action B.2 of this LCO is being proposed to be changed from Mode 5 within 84 hours to Mode 4 within 60 hours, and the end-state associated with Required Action F.2 of this LCO is being proposed to be changed from Mode 5 within 36 hours to Mode 4 within 12 hours.

Assessment and Finding: In Mode 4 the release of stored energy to the RB would be only that associated with decay heat energy and energy stored in the RCS components. That is, over 95% of the energy assumed to be released to the RB during the DBA LOCA is associated with the core thermal power resulting from 100% full power. Since the reactor is already shut down, such a thermal release to the RB is not possible; only a small fraction of this energy could be released. Occurrence of the DBA, a 28 inch cold leg guillotine break at a RCP discharge, is considered to be very unlikely to occur at any time, much less while operating in Mode 4. Indeed, the occurrence of a LOCA of any kind during operation in this Mode is considered highly unlikely. Due to the redundancy of the containment spray and cooling systems, both their functions are available to control and maintain RB pressure well below the design limit; the function to remove radioactive iodine from the containment atmosphere will also be available.

Because the energy that can be released to the RB when operating in Mode 4 is only a fraction of that associated with a DBA, RB pressure will be only slightly higher should a LOCA occur when operating in Mode 4 as compared to when operating in Mode 5. For these reasons containment leakage is small and because significant radionuclide decay will have occurred, (i.e., because the plant has been shut down), no increase in LERF is expected.

Plant risk is lower when operating in Mode 4 (not on SDC) than when operating in Mode 5; risk associated with SDC operation is avoided. Also, when operating in Mode 4 (not on SDC) there are more mitigation systems (e.g., HPI and EFW/AFW) available to respond to an IE that could challenge RCS inventory or decay heat removal, than when operating in Mode 5. These considerations ultimately lead to reduced challenges to the containment spray and cooling systems when operating in Mode 4 versus Mode 5. Therefore, the staff finds that the above requested change is acceptable.

3.2.11 LCO 3.7.7 Component Cooling Water (CCW) System

This system provides cooling for ECCS equipment including EFW pumps that function to mitigate loss of feedwater IEs, and containment control equipment.

LCO: Two CCW trains shall be operable.

Condition Requiring Entry into End-State: This proposed end-state change is associated with LCO 3.7.7 Condition B, Required Action B.2. Specifically, if a CCW train becomes inoperable and cannot be restored within 72 hours, then Mode 3 is prescribed within 6 hours and Mode 5 within 36 hours.

Proposed Modification for End-State Required Actions: The end-state associated with Required Action B.2 of this LCO is being proposed to be changed from Mode 5 within 36 hours to Mode 4 within 12 hours.

Assessment and Finding: In Mode 4 the stored energy of the reactor system would be only that associated with reduced decay heat energy and energy stored in the RCS components. Because of this, heat loads on the CCW system will be greatly reduced from those associated with the DBA, i.e., a LOCA. Also, occurrence of a design bases LOCA is considered to be very unlikely to occur at anytime much less while operating in Mode 4. Indeed, the occurrence of a LOCA of any kind during operation in this Mode is considered highly unlikely. Plant risk is lower when operating in Mode 4 (not on SDC) than when operating in Mode 5; risk associated with SDC operation is avoided. Also, when operating in Mode 4 (not on SDC) there are more mitigation systems (e.g., HPI and EFW/AFW) available to respond to an IE that could challenge RCS inventory or decay heat removal, than when operating in Mode 5. These considerations ultimately lead to reduced challenges to the CCW system when operating in Mode 4 versus Mode 5. Therefore, the staff finds that the above requested change is acceptable.

3.2.12 TS 3.7.8 Service Water System (SWS)

This system provides cooling for equipment that supplies boron to the RCS, i.e., HPI and emergency boration system.

LCO: Two SWS trains shall be operable.

Condition Requiring Entry into End-State: This proposed end-state change is associated with LCO 3.7.8 Condition B, Required Action B.2. Specifically, if an SWS train becomes inoperable and cannot be restored within 72 hours, then Mode 3 is prescribed within 6 hours and Mode 5 within 36 hours.

Proposed Modification for End-State Required Actions: The end-state associated with Required Action B.2 of this LCO is being proposed to be changed from Mode 5 within 36 hours to Mode 4 within 12 hours.

Assessment and Finding: In Mode 4 the stored energy of the reactor system would be only that associated with reduced decay heat energy and energy stored in the RCS components. Because of this, heat loads on the SWS will be greatly reduced from those associated with the DBA, i.e., a LOCA. Also, occurrence of a design bases LOCA is considered to be very unlikely to occur at anytime much less while operating in Mode 4. Indeed, the occurrence of a LOCA of any kind during operation in this Mode is considered highly unlikely. Plant risk is lower when operating in Mode 4 (not on SDC) than when operating in Mode 5; risk associated with SDC operation is avoided. Also, when operating in Mode 4 (not on SDC) there are more mitigation systems (e.g., HPI and EFW/AFW) available to respond to an IE that could challenge RCS inventory or decay heat removal, than when operating in Mode 5. These considerations ultimately lead to reduced challenges to the SWS when operating in Mode 4 versus Mode 5, and

therefore, the staff finds that the above requested change is acceptable.

3.2.13 TS 3.7.9 Ultimate Heat Sink (UHS)

The UHS provides a heat sink for process and operating heat from safety related components during a transient or accident as well as during normal operation. The UHS has been defined as that complex of water sources, including necessary retaining structures (e.g., a pond with its dam, or a river with its dam), and the canals or conduits connecting the sources with, but not including, the cooling water system intake structures. The two principal functions of the UHS are the dissipation of residual heat after a reactor shutdown, and dissipation of residual heat after an accident. The UHS is the sink for heat removal from the reactor core following all accidents and anticipated occurrences (AOs) in which the unit is cooled down and placed on DHR. Its maximum post accident heat load occurs approximately 20 minutes after a design basis LOCA. Near this time, the unit switches from injection to recirculation and the containment cooling systems are required to remove the core decay heat.

LCO: The UHS shall be operable.

Condition Requiring Entry into End-State: This proposed end-state change is associated with LCO 3.7.9 Condition C, Required Action C.2. Specifically, if the UHS complex becomes inoperable due to condition A and cannot be restored within 72 hours, then Mode 3 is prescribed within 6 hours and Mode 5 within 36 hours.

Proposed Modification for End-State Required Actions: The end-state associated with Required Action C.2, as it relates to Condition A only, of this LCO is being proposed to be changed from Mode 5 within 36 hours to Mode 4 within 12 hours. It is proposed that a new Action B be added, that addresses Condition A only. The Required Action of the new Condition B if Required Action and associated Completion Time of Condition A is not met is proposed to be Mode 3 within 6 hours and Mode 4 within 12 hours. Existing Condition B would be re-lettered to Condition C and existing Condition C would be re-lettered to Condition D. The first Boolean statement of Condition D would refer only to Condition C.

Assessment and Finding: In Mode 4 the stored energy of the reactor system would be only that associated with reduced decay heat energy and energy stored in the RCS components. Because of this, heat loads on the UHS will be greatly reduced from those associated with the DBA, i.e., a LOCA. Also, occurrence of a design basis LOCA is considered to be very unlikely to occur at anytime much less while operating in Mode 4. The occurrence of a LOCA of any kind during operation in this Mode is considered highly unlikely. Plant risk is lower when operating in Mode 4 (not on SDC) than when operating in Mode 5; risk associated with SDC operation is avoided. Also, when operating in Mode 4 (not on SDC) there are more mitigation systems (e.g., HPI and EFW/AFW) available to respond to an IE that could challenge RCS inventory or decay heat removal, than when operating in Mode 5. These considerations ultimately lead to reduced challenges to the UHS when operating in Mode 4 versus Mode 5, and therefore the staff finds that the above requested change is acceptable.

3.2.14 TS 3.7.10 Control Room Emergency Ventilation System (CREVS)

The CREVS provides a protected environment from which operators can control the unit following an uncontrolled release of radioactivity, [chemicals, or toxic gas]. The CREVS consists of two independent, redundant, fan filter assemblies. Upon receipt of the activating signal(s), the normal control room ventilation system is automatically shut down and the CREVS can be manually started. The CREVS is designed to maintain the control room for 30 days of continuous occupancy after a DBA without exceeding a 5 rem whole body dose or its equivalent to any part of the body.

LCO: Two CREVS trains shall be operable.

Condition Requiring Entry into End-State: This proposed end-state change is associated with LCO 3.7.10 Condition C, Required Action C.2. Specifically, if one train of CREVS becomes inoperable and cannot be restored within 7 days or two CREVS trains become inoperable (due to inoperable control room boundary) and cannot be restored within 24 hours, then Mode 3 is prescribed within 6 hours and Mode 5 within 36 hours.

Proposed Modification for End-State Required Actions: The end-state associated with Required Action C.2 of this LCO is being proposed to be changed from Mode 5 within 36 hours to Mode 4 within 12 hours.

Assessment and Finding: This system would be required in the event the main control room (MCR) was isolated. Such an isolation would be directly due to an uncontrolled release of radioactivity, [chemicals, or toxic gas]. Uncontrolled release of radioactivity would be associated with a LOCA. A LOCA is considered highly unlikely to occur during Mode 4 operations. This is especially true of operations toward the lower end of Mode 4 while operating on SGs (SDC not in operation). Regardless of the CREVS status, the risks associated with Mode 4 are lower than the Mode 5 operating state. Relative to the uncontrolled release of [chemicals, or toxic gas], this situation is the same as when operating in Mode 5, *i.e.*, frequencies for occurrence of these IEs are the same in Mode 5 as Mode 4. Plant risk is lower when operating in Mode 4 (not on SDC) than when operating in Mode 5; risk associated with SDC operation is avoided. Also, when operating in Mode 4 there are more mitigation systems available to respond to IEs that could challenge RCS inventory or decay heat removal, than when operating in Mode 5. These systems include the HPI system and EFW/AFW systems. These considerations should ultimately lead to reduced challenges to CREVS when operating in Mode 4 versus Mode 5, and therefore, the staff finds that the above requested change is acceptable.

3.2.15 TS 3.7.11 Control Room Emergency Air Temperature Control System (CREATCS)

The CREATCS provides temperature control for the control room following isolation of the control room. The CREATCS consists of two independent and redundant trains that provide cooling of recirculated control room air. A cooling coil and a water cooled condensing unit are provided for each system to provide suitable temperature conditions in the control room for operating personnel and safety related control equipment. Ductwork, valves or dampers, and instrumentation also form part of the system. Two redundant air cooled condensing units are provided as a backup to the water cooled condensing unit. Both the water cooled and air cooled condensing units must be operable for the CREATCS to be operable. During emergency operation, the CREATCS maintains the temperature between 70°F and 85°F. The CREATCS is a subsystem of CREVS providing air temperature control for the control room.

LCO: Two CREATCS trains shall be operable.

Condition Requiring Entry into End-State: This proposed end-state change is associated with LCO 3.7.11 Condition B, Required Action B.2. Specifically, if a CREATCS train becomes inoperable and cannot be restored within 30 days, then Mode 3 is prescribed within 6 hours and Mode 5 within 36 hours.

Proposed Modification for End-State Required Actions: The end-state associated with Required Action B.2 of this LCO is being proposed to be

changed from Mode 5 within 36 hours to Mode 4 within 12 hours.

Assessment and Finding: This system is a subsystem of CREVS and would be required in the event the MCR was isolated. Such an isolation would be directly due to an uncontrolled release of radioactivity, [chemicals, or toxic gas]. Uncontrolled release of radioactivity would be associated with a LOCA. A LOCA is considered highly unlikely to occur during Mode 4 operations. This is especially true of operations toward the lower end of Mode 4 while operating on SGs (SDC not in operation). Relative to the uncontrolled release of [chemicals, or toxic gas], this situation is the same as when operating in Mode 5, *i.e.*, frequencies for occurrence of these IEs are the same in Mode 5 as in Mode 4. When operating in Mode 4 there are more mitigation systems available to respond to IEs that could challenge RCS inventory or decay heat removal, than when operating in Mode 5. These systems include the HPI system and EFW/AFW systems. This should ultimately lead to reduced challenges to CREACTS when operating in Mode 4 versus Mode 5. Plant risk is lower when operating in Mode 4 (not on SDC) than when operating in Mode 5; risk associated with SDC operation is avoided. Therefore, the staff finds that the above requested change is acceptable.

3.2.16 TS 3.8.1 AC Source—Operating

The unit Class IE AC Electrical Power Distribution System alternating current (AC) sources consist of the offsite power sources (preferred power sources, normal and alternate(s)) and the [onsite standby power sources]. The AC electrical power system provides independence and redundancy to ensure an available source of power to the ESF systems. The onsite Class 1E AC Distribution System is divided into redundant load groups (trains) so that the loss of any one group does not prevent the minimum safety functions from being performed. Each train has connections to two preferred offsite power sources and a single [onsite standby power source]. Offsite power is supplied to the unit switchyard(s) from the transmission network by [two] transmission lines. From the switchyard(s), two electrically and physically separated circuits provide AC power, through [step down station auxiliary transformers] to the 4.16 kV ESF buses.

The initial conditions of DBA and transient analyses in the safety analysis report (SAR) assume ESF systems are operable. The AC electrical power sources are designed to provide sufficient capacity, capability, redundancy, and reliability to ensure the availability of necessary power to ESF systems so that the fuel, RCS, and containment design limits are not exceeded. During operations in Mode 4 there is always a need to assure power is available to SSCs that support the critical safety functions. To this end, AC power sources are assured during occurrence of a loss of offsite power (LOOP) by operation of one of two redundant [onsite standby power sources]. This situation is no different than when operating in Mode 4 or 5.

LCO: The following AC electrical power sources shall be operable:

a. Two qualified circuits between the offsite transmission network and the onsite Class 1E AC Electrical Power Distribution System,

b. Two diesel generators (DG) each capable of supplying one train of the onsite Class 1E AC Electrical Power Distribution System, and

[c. Automatic load sequencers for Train A and Train B.]

Condition Requiring Entry into End-State: This proposed end-state change is associated with LCO 3.8.1 Condition G, Required Action G.2. Specifically, if the required actions and associated completion times of Condition A, B, C, D, E or F cannot be met, then Mode 3 is prescribed within 12 hours and Mode 5 within 36 hours.

Proposed Modification for End-State Required Actions: The end-state associated with Required Action G.2 of this LCO is being proposed to be changed from Mode 5 within 36 hours to Mode 4 within 12 hours.

Assessment and Finding: The operability requirements of the AC electrical power sources is predicated on initial assumptions of the accident analyses most notably design basis LOCAs. A design basis LOCA is considered highly unlikely to occur during at-power operations, much less during Mode 4; indeed, the occurrence of a LOCA of any kind during operation in Mode 4 is considered highly unlikely. This is especially true of operations toward the lower end of Mode 4 while operating on SGs (SDC not in operation). Plant risk is lower when operating in Mode 4 (not on SDC) than when operating in Mode 5; risk associated with SDC operation is avoided. Also, when operating in Mode 4 there are more mitigation systems (*e.g.*, HPI and EFW/AFWV) available to respond to IEs that could challenge RCS inventory or decay heat removal, than when operating in Mode 5. These systems include the HPI system and EFWV/AFW systems. This consideration is particularly germane as it relates to loss of AC power sources because with the SGs operating in Mode 4, turbine driven EFW pumps (TDEFWPs) are immediately available with SG pressure of [50 PSIG (–2981F RCS temperature)]. These considerations ultimately lead to reduced challenges to CDF and LERF when operating in Mode 4 versus operations in Mode 5. The redundant nature of the AC power sources, including [onsite standby power sources], provides for availability of AC power even if one source becomes inoperable. Therefore, the staff finds that the above requested change is acceptable.

3.2.17 TS 3.8.4 DC Sources—Operating

The station direct current (DC) electrical power system provides the alternating current (AC) emergency power system with control power. It also provides both motive and control power to selected safety related equipment and preferred AC vital bus power (via inverters). The DC electrical power system is designed to have sufficient independence, redundancy, and testability to perform its safety functions, assuming a single failure. The [125/250] voltage DC (VDC) electrical power system consists of two independent and redundant safety related Class IE DC electrical power subsystems ([Train A and Train B]). The need for DC power to support the ESFs is assured during a LOOP by operation of one redundant train of station DC power as backed from the [onsite standby power sources] via the associated battery charger. This situation is no different for Mode 4 or Mode 5.

LCO: The Train A and Train B DC electrical subsystems shall be operable.

Condition Requiring Entry into End-State: This proposed end-state change is associated with LCO 3.8.4 Condition D, Required Action D.2. Specifically, if one DC electrical power subsystem becomes inoperable and cannot be restored within 2 hours, then Mode 3 is prescribed within 6 hours and Mode 5 within 36 hours.

Proposed Modification: The end-state associated with Required Action D.2 of this LCO is being proposed to be changed from Mode 5 within 36 hours to Mode 4 within 12 hours.

Assessment and Finding: The operability requirements of the DC electrical power sources is predicated on initial assumptions of the accident analyses most notably design basis LOCAs. A design basis LOCA is

considered highly unlikely to occur during at-power operations, much less during Mode 4; indeed, the occurrence of a LOCA of any kind during operation in Mode 4 is considered highly unlikely. This is especially true of operations toward the lower end of Mode 4 while operating on SGs (SDC not in operation). Plant risk is lower when operating in Mode 4 (not on SDC) than when operating in Mode 5; risk associated with SDC operation is avoided. Also, when operating in Mode 4 there are more mitigation systems available to respond to IEs that could challenge decay heat removal, than when operating in Mode 5. These systems include the HPI and EFW/AFW systems. This consideration is particularly germane as it relates to loss of DC power sources (control and circuit breaker closure power for plant equipment) because with the SGs operating in Mode 4, TDEFWPs are immediately available with SG pressure of [50 PSIG (–298°F RCS temperature)]. These considerations should ultimately lead to reduced challenges to CDF and LERF when operating in Mode 4 versus operations in Mode 5. The redundant nature of the DC power sources, provides for availability of DC power even if one source becomes in inoperable. Therefore, the staff finds that the above requested change is acceptable.

3.2.18 TS 3.8.9 Distribution Systems—Operating

The onsite Class IE AC, DC, and AC vital bus electrical power distribution systems are divided by train into [two] redundant and independent AC, DC, and AC vital bus electrical power distribution subsystems. The required power distribution systems ensure the availability of AC, DC, and AC vital bus electrical power for the systems required to shut down the reactor and maintain it in a safe condition after an AOO or a postulated DBA. Maintaining the train A and B, AC, DC, and AC vital bus electrical power distribution subsystems operable ensures that the redundancy incorporated into the design of ESF is not defeated. Therefore, a single failure within any system or within the electrical power distribution subsystems will not prevent safe shutdown of the reactor. Providing for reactor shutdown is not a concern while operating in Mode 4. However, maintaining safe plant conditions is always a concern and requires that at least one redundant electrical distribution system be operable. This is assured by the redundant electrical distribution system design and the ability to power one of these systems via batteries backed by [onsite standby power sources] for DC distribution and AC vital buses, and [onsite standby power sources] for AC distribution. There is no difference in this situation whether the plant is operating in Mode 4 or 5.

LCO: The Train A and Train B AC, DC and AC vital bus electrical power distribution subsystems shall be operable.

Condition Requiring Entry into End-State: This proposed end-state change is associated with LCO 3.8.9 Condition D, Required Action D.2. Specifically, if the required actions and associated completion times of Condition A, B or C cannot be met, then Mode 3 is prescribed within 6 hours and Mode 5 within 36 hours.

Proposed Modification for End-State Required Actions: The end-state associated with Required Action D.2 of this LCO is being proposed to be changed from Mode 5 within 36 hours to Mode 4 within 12 hours.

Assessment and Finding: The operability requirements of the AC, DC, and AC vital bus electrical power distribution systems are predicated on providing the necessary power to ESF systems so that the fuel, RCS, and containment design limits are not exceeded in the event of a design basis LOCA. A design basis LOCA is considered highly unlikely to occur during at-power operations, much less during Mode 4; indeed, the occurrence of a LOCA of any kind during operation in Mode 4 is considered highly unlikely. This is especially true of operations at the lower end of Mode 4 while operating on SGs (SDC not in operation). Plant risk is lower when operating in Mode 4 (not on SDC) than when operating in Mode 5; risk associated with SDC operation is avoided. Also, when operating in Mode 4 there are more mitigation systems available to respond to IEs that could challenge RCS inventory or decay heat removal, than when operating in Mode 5. These systems include the HPI system and EFW/AFW systems. This consideration is particularly germane as it relates to loss of electrical power distribution systems because with the SGs operating in Mode 4, TDEFWPs are immediately available with SG pressure of [50 PSIG (-2980F RCS temperature)]. This consideration should ultimately lead to reduced challenges to CDF and LERF when operating in Mode 4 versus operations in Mode 5. The redundant nature of the AC, DC, and AC vital bus electrical power distribution systems, including [onsite standby power sources], provides for availability of electrical power even if one power distribution system becomes inoperable. Therefore, the staff finds that the above requested change is acceptable.

4.0 State Consultation

In accordance with the Commission's regulations, the [____] State official was notified of the proposed issuance of the amendment. The State official had [(1) no comments or (2) the following comments—with subsequent disposition by the staff].

5.0 Environmental Consideration

The amendment changes requirements with respect to the installation or use of a facility component located within the restricted area as defined in 10 CFR Part 20. The NRC staff has determined that the amendment involves no significant increase in the amounts and no significant change in the types of any effluents that may be released offsite, and that there is no significant increase in individual or cumulative occupational radiation exposure.20. [The NRC staff has determined that the amendment involves a change in surety, insurance, and/or indemnity requirements, or recordkeeping, reporting, or administrative procedures or requirements.] The Commission has previously issued a proposed finding that the amendment involves no significant hazards considerations, and there has been no public comment on the finding [FR]. Accordingly, the amendments meet the eligibility criteria for categorical exclusion set forth in 10 CFR 51.22(c)(9) [and (c)(10)]. Pursuant to 10 CFR 51.22(b), no environmental impact statement or environmental assessment need be prepared in connection with the issuance of the amendment.

6.0 Conclusion

The Commission has concluded, on the basis of the considerations discussed above, that (1) there is reasonable assurance that the health and safety of the public will not be endangered by operation in the proposed manner, (2) such activities will be conducted in compliance with the Commission's regulations, and (3) the issuance of the amendments will not be inimical to the common defense and security or to the health and safety of the public.

7.0 References

1. BAW–2441–A, Revision 2, ''Risk-Informed Justification for LCO End-State Changes,'' September 2006.
2. **Federal Register**, Vol. 58, No. 139, p. 39136, ''Final Policy Statement on Technical Specifications Improvements for Nuclear Power Plants,'' July 22, 1993.
3. 10 CFR 50.65, Requirements for

''Monitoring the Effectiveness of Maintenance at Nuclear Power Plants.''
4. Regulatory Guide 1.182, ''Assessing and Managing Risk Before Maintenance Activities at Nuclear Power Plants,'' May 2000. (ML003699426).
5. NUMARC 93–01, ''Industry Guideline for Monitoring the Effectiveness of Maintenance at Nuclear Power Plants,'' Nuclear Management and Resource Council, Revision 3, July 2000.
6. NRC Safety Evaluation for Topical Report BAW–2441, Revision 2, August 25, 2006. (ML062130286).
7. TSTF–431, Revision 2, ''Change in Technical Specifications End-States, BAW–2441–A.''
8. TSTF–IG–07–01, Implementation Guidance for TSTF–431, Revision 1, ''Change in Technical Specifications End-States, BAW–2441–A,'' April 2007.
9. Regulatory Guide 1.174, ''An Approach for Using Probabilistic Risk Assessment in Risk-Informed Decision Making on Plant Specific Changes to the Licensing Basis,'' USNRC, August 1998. (ML003740133).
10. Regulatory Guide 1.177, ''An Approach for Pant Specific Risk-Informed Decision Making: Technical Specifications,'' USNRC, August 1998. (ML003740176).
11. Regulatory Issue Summary 2007–06, ''Regulatory Guide 1.200 Implementation,'' USNRC, March 22, 2007.

The Following Example of an Application Was Prepared by the NRC Staff To Facilitate Use of the Consolidated Line Item Improvement Process (CLIIP). The Model Provides the Expected Level of Detail and Content for an Application To Change Technical Specifications End-States for B&W Plants Using CLIIP. Licensees Remain Responsible for Ensuring That Their Actual Application Fulfills Their Administrative Requirements as Well as Nuclear Regulatory Commission Regulations

U.S. Nuclear Regulatory Commission, Document Control Desk, Washington, D.C. 20555.

SUBJECT:
PLANT NAME
DOCKET NO. 50—APPLICATION FOR ADOPTING TECHNICAL SPECIFICATION CHANGE TO REQUIRED ACTION End-States FOR B&W PLANTS USING THE CONSOLIDATED LINE ITEM IMPROVEMENT PROCESS

Gentleman:

In accordance with th provisions of 10 CFR 50.90 [LICENSEE] is submitting a request for an amendment to the technical specifications (TS) for [PLANT NAME, UNIT NOS.].

The proposed amendment would modify TS requirements for end-states associated with implementation of BAW–2441–A, Revision 2, ''Risk-Informed Justification for LCO End-State Changes.''

Attachment 1 provides a description of the proposed change, the requested confirmation of applicability, and plant-specific verifications. Attachment 2 provides the existing TS pages marked up to show the proposed change. Attachment 3 provides revised (clean) TS pages. Attachment 4 provides a summary of the regulatory commitments made in this submittal.

[LICENSEE] requests approval of the proposed License Amendment by [DATE], with the amendment being implemented [BY DATE OR WITHIN X DAYS].

In accordance with 10 CFR 50.91, a copy of this application, with attachments, is being provided to the designated [STATE] Official.

I declare under penalty of perjury under the laws of the United Stats of America that I am authorized by [LICENSEE] to make this request and that the foregoing is true and correct. (Note that request may be notarized in lieu of using this oath or affirmation statement).

If you should have any questions regarding this submittal, please contact [NAME, TELEPHONE NUMBER]

Sincerely,

[Name, Title]

Attachments:
1. Description and Assessment
2. Proposed Technical Specification Changes
3. Revised Technical Specification Pages
4. Regulatory Commitments
5. Proposed Technical Specification Bases Changes

cc:
NRC Project Manager
NRC Regional Office
NRC Resident Inspector
State Contact

Attachment 1—Description and Assessment

1.0 Description

The proposed amendment would modify TS end-state requirements associated with implementation of BAW–2441–A, Revision 2, ''Risk-Informed Justification for LCO End-State Changes.'' Current technical specification action requirements frequently require that the unit be brought to cold shutdown when the TS limiting condition for operation for a system has not been met. Depending on the system, and the affected safety function, the requirement to go to cold shutdown may not represent the most risk effective course of action. In accordance with the qualitative risk analysis in BAW–2441–A, Revision 2, and the license amendment request, that provide a basis for changing the TS shutdown action requirement, where appropriate the shutdown end-state is changed from cold shutdown to hot shutdown.

The changes are consistent with Nuclear Regulatory Commission (NRC) approved Industry/Technical Specification Task Force (TSTF) STS change TSTF–431, Revision 2. The **Federal Register** notice published on [DATE] announced the availability of this TS improvement through the consolidated line item improvement process (CLIIP).

2.0 Assessment

2.1 Applicability of Published Safety Evaluation

[LICENSEE] has reviewed the safety evaluation dated [DATE] as part of the CLIIP. This review included a review of the NRC staff's evaluation, as well as the supporting information provided to support TSTF–431, Revision 2. [LICENSEE] has concluded that the justifications presented in the TSTF proposal and the safety evaluation prepared by the NRC staff are applicable to [PLANT, UNIT NOS.] and the justifications apply to this amendment for the incorporation of the changes to the [PLANT] TS.

2.2 Optional Changes and Variations

[LICENSEE] is not proposing any variations or deviations from the TS changes described in TSTF–431, Revision 2, and the NRC staff's model safety evaluation dated [DATE].

3.0 Regulatory Analysis

3.1 No Significant Hazards Consideration Determination

[LICENSEE] has reviewed the proposed no significant hazards consideration determination (NSHCD) published in the **Federal Register** as part of the CLIIP. [LICENSEE] has concluded that the proposed NSHCD presented in the **Federal Register** notice is applicable to [PLANT] and is [attached, or incorporated herein/following] satisfying the requirements of 10 CFR 50.91(a).

3.2 Verification and Commitments

As discussed in the notice of availability published in the **Federal Register** on [DATE] for this TS improvement, the [LICENSEE] verifies the applicability of TSTF–431, Revision 2, to [PLANT], and commits to following the guidance set forth in TSTF–IG–07–01, Implementation Guidance for TSTF–431, Revision 1, Change in Technical Specifications End-States (BAW–2441).''

The proposed TSTF–431, revision 2, change revises selected required action end-states for B&W STS (NUREG–1430) by allowing plants to go to hot shutdown versus cold shutdown for short durations to effect equipment repairs, after the performance of a plant configuration risk assessment. This application implements TS changes approved in BAW–2441–A, Revision 2,

''Risk-Informed Justification for LCO End-State Changes.''

4.0 Environmental Evaluation

[LICENSEE] has reviewed the environmental evaluation included in the model safety evaluation dated [DATE] as part of the CLIIP. [LICENSEE] has concluded that the staff's findings presented in that evaluation are applicable to [PLANT] and the evaluation is [attached, or incorporated herein/following] for this application.

ATTACHMENT 2—Proposed Technical Specification Changes (Mark-Up)

ATTACHMENT 3—Proposed Technical Specification Pages

ATTACHMENT 4—List of Regulatory Commitments

The following table identifies those actions committed to by [LICENSEE] in this document. Any other statements in this submittal are provided for information purposes and are not considered to be regulatory commitments. Please direct questions regarding these commitments to [CONTACT NAME].

Regulatory commitments	Due date/event
[LICENSEE] will follow the guidance established in Section 11 of NUMARC 93–01, ''Industry Guidance for Monitoring the Effectiveness of Maintenance at Nuclear Power Plants,'' Nuclear Management and Resource Council, Revision 3, July 2000.	[Ongoing, or implement with amendment]
[LICENSEE] will follow the guidance established in TSTF–IG–07–01, Implementation Guidance for TSTF–431, Revision 1, ''Change in Technical Specifications End-States, BAW–2441–A,'' April 2007.	[Implement with amendment, when TS Required Action End State remains within the APPLICABILITY of TS]

ATTACHMENT 5—Proposed Changes to Technical Specification Bases Pages

Proposed No Significant Hazards Consideration Determination

Description of Amendment Request: A change is proposed to the technical specifications (TS) of [plant name], consistent with Technical Specifications Task Force (TSTF) change TSTF–431, Revision 2, to the standard technical specifications (STS) for B&W Plants (NUREG 1430) to allow, for some systems, entry into hot shutdown rather than cold shutdown to repair equipment, if risk is assessed and managed consistent with the program in place for complying with the requirements of 10 CFR 50.65(a)(4). Changes proposed will be made to the [plant name] TS for selected Required Action end-states providing this allowance.

Basis for proposed no-significant-hazards-consideration determination: As required by 10 CFR 50.91(a), an analysis of the issue of no-significant-hazards consideration is presented below:

Criterion 1—The Proposed Change Does Not Involve a Significant Increase in the Probability or Consequences of an Accident Previously Evaluated

The proposed change allows a change to certain required end-states when the TS Completion Times for remaining in power operation will be exceeded. Most of the requested technical specification (TS) changes are to permit an end-state of hot shutdown (Mode 4) rather than an end-state of cold shutdown (Mode 5) contained in the current TS. The request was limited to: (1) those end-states where entry into the shutdown mode is for a short interval, (2) entry is initiated by inoperability of a single train of equipment or a restriction on a plant operational parameter, unless otherwise stated in the applicable technical specification, and (3) the primary purpose is to correct the initiating condition and return to power operation as soon as is practical. Risk insights from both the qualitative and quantitative risk assessments were used in specific TS assessments. Such assessments are documented in Sections 4 and 5 of BAW–2441–A, Revision 2, ''Risk Informed Justification for LCO End-State Changes,'' for B&W Plants. They provide an integrated discussion of deterministic and probabilistic issues, focusing on specific technical specifications, which are used to support the proposed TS end-state and associated restrictions. The staff finds that the risk insights support the conclusions of the specific TS assessments. Therefore, the probability of an accident previously evaluated is not significantly increased, if at all. The consequences of an accident after adopting proposed TSTF–431, Revision 2, are no different than the consequences of an accident prior to its adoption. Therefore, the consequences of an accident previously evaluated are not significantly affected by this change. The addition of a requirement to assess and manage the risk introduced by this change will further minimize possible concerns. Therefore, this change does not involve a significant increase in the probability or consequences of an accident previously evaluated.

Criterion 2—The Proposed Change Does Not Create the Possibility of a New or Different Kind of Accident From Any Previously Evaluated

The proposed change does not involve a physical alteration of the plant (no new or different type of equipment will be installed). If risk is assessed and managed, allowing a change to certain required end-states when the TS Completion Times for remaining in power operation are exceeded, i.e., entry into hot shutdown rather than cold shutdown to repair equipment, will not introduce new failure modes or effects and will not, in the absence of other unrelated failures, lead to an accident whose consequences exceed the consequences of accidents previously evaluated. The addition of a requirement to assess and manage the risk introduced by this change and the commitment by the licensee to adhere to the guidance in TSTF–IG–07–01, Implementation Guidance for TSTF–431, Revision 1, ''Changes in Technical Specifications End-States, BAW–2441–A,'' will further minimize possible concerns. Thus, this change does not create the possibility of a new or different kind of accident from an accident previously evaluated.

Criterion 3—The Proposed Change Does Not Involve a Significant Reduction in the Margin of Safety

The proposed change allows, for some systems, entry into hot shutdown rather than cold shutdown to repair equipment, if risk is assessed and managed. The B&WOG's risk assessment approach is comprehensive and follows staff guidance as documented in RGs 1.174 and 1.177. In addition, the analyses show that the criteria of the

three-tiered approach for allowing TS changes are met. The risk impact of the proposed TS changes was assessed following the three-tiered approach recommended in RG 1.177. A risk assessment was performed to justify the proposed TS changes. The net change to the margin of safety is insignificant. Therefore, this change does not involve a significant reduction in a margin of safety.

Based upon the reasoning presented above and the previous discussion of the amendment request, the requested change does not involve a significant hazards consideration.

Dated at Rockville, Maryland, this 14th day of November, 2007.

For the Nuclear Regulatory Commission.

Timothy J. Kobetz,

Section Chief, Technical Specifications Branch, Division of Inspection & Regional Support, Office of Nuclear Reactor Regulation.

[FR Doc. E7–22738 Filed 11–20–07; 8:45 am]

BILLING CODE 7590–01–P

OFFICE OF MANAGEMENT AND BUDGET

FY 2008 Cost of Outpatient Medical, Dental, and Pharmacy Services Furnished by Department of Defense Medical Treatment Facilities; Certain Rates Regarding Recovery From Tortiously Liable Third Persons

AGENCY: Office of Management and Budget, Executive Office of the President.

ACTION: Notice.

SUMMARY: By virtue of the authority vested in the President by section 2(a) of Pub. L. 87–603 (76 Stat. 593; 42 U.S.C. 2652), and delegated to the Director of the Office of Management and Budget by the President through Executive Order No. 11541 of July 1, 1970, the rates referenced below are hereby established. These rates are for use in connection with the recovery from tortiously liable third persons for the cost of outpatient medical, dental and pharmacy services furnished by military treatment facilities through the Department of Defense (DoD). The rates have been established in accordance with the requirements of OMB Circular A–25, requiring reimbursement of the full cost of all services provided. The outpatient medical and dental rates referenced are effective upon publication of this notice in the **Federal Register** and will remain in effect until further notice. Pharmacy rates are updated periodically. The inpatient rates, published on December 9, 2002, remain in effect until further notice. A full analysis of the rates is posted at the DoD's Uniform Business Office Web Site: *http://www.tricare.mil/ocfo/_docs/CY07%20Reimbursement%20Rates11.pdf*. The rates can be found at: *http://www.tricare.mil/ocfo/mcfs/ubo/mhs_rates.cfm.*

Jim Nussle,

Director.

[FR Doc. E7–22701 Filed 11–20–07; 8:45 am]

BILLING CODE 3110–01–P

PENSION BENEFIT GUARANTY CORPORATION

Proposed Submission of Information Collection for OMB Review; Comment Request; Liability for Termination of Single-Employer Plans

AGENCY: Pension Benefit Guaranty Corporation.

ACTION: Notice of intention to request extension of OMB approval.

SUMMARY: The Pension Benefit Guaranty Corporation (''PBGC'') intends to request that the Office of Management and Budget (''OMB'') extend approval, under the Paperwork Reduction Act, of a collection of information contained in its regulation on Liability for Termination of Single-Employer Plans, 29 CFR Part 4062 (OMB Control Number 1212–0017; expires February 29, 2008). This notice informs the public of PBGC's intent and solicits public comment on the collection of information.

DATES: Comments should be submitted by January 22, 2008.

ADDRESSES: Comments may be submitted by any of the following methods:

Federal eRulemaking Portal: http://www.regulations.gov.

Follow the Web site instructions for submitting comments.

E-mail: paperwork.comments@pbgc.gov.

Fax: 202–326–4224.

Mail or Hand Delivery: Legislative and Regulatory Department, Pension Benefit Guaranty Corporation, 1200 K Street, NW., Washington, DC 20005–4026.

Comments received will be posted to *http://www.pbgc.gov.*

Copies of the collection of information may be obtained without charge by writing to PBGC's Communications and Public Affairs Department at Suite 240 at the above address or by visiting that office or calling 202–326–4040 during normal business hours. (TTY and TDD users may call the Federal relay service toll-free at 1–800–877–8339 and ask to be connected to 202–326–4040.) The regulation on Liability for Termination of Single-Employer Plans can be accessed on PBGC's Web site at *http://www.pbgc.gov.*

FOR FURTHER INFORMATION CONTACT: Thomas H. Gabriel, Attorney, or Catherine B. Klion, Manager, Regulatory and Policy Division, Legislative and Regulatory Department, Pension Benefit Guaranty Corporation, 1200 K Street, NW., Washington, DC 20005–4026, 202–326–4024. (For TTY and TDD, call 800–877–8339 and request connection to 202–326–4024.)

SUPPLEMENTARY INFORMATION: Section 4062 of the Employee Retirement Income Security Act of 1974, as amended, provides that the contributing sponsor of a single-employer pension plan and members of the sponsor's controlled group (''the employer'') incur liability (''employer liability'') if the plan terminates with assets insufficient to pay benefit liabilities under the plan. PBGC's statutory lien for employer liability and the payment terms for employer liability are affected by whether and to what extent employer liability exceeds 30 percent of the employer's net worth.

Section 4062.6 of PBGC's employer liability regulation (29 CFR 4062.6) requires a contributing sponsor or member of the contributing sponsor's controlled group who believes employer liability upon plan termination exceeds 30 percent of the employer's net worth to so notify PBGC and to submit net worth information. This information is necessary to enable PBGC to determine whether and to what extent employer liability exceeds 30 percent of the employer's net worth.

The collection of information under the regulation has been approved by OMB under control number 1212–0017 through February 29, 2008. PBGC intends to request that OMB extend its approval for another three years. An agency may not conduct or sponsor, and a person is not required to respond to, a collection of information unless it displays a currently valid OMB control number.

PBGC estimates that an average of five contributing sponsors or controlled group members per year will respond to this collection of information. PBGC further estimates that the average annual burden of this collection of information will be 12 hours and $3,636 per respondent, with an average total annual burden of 60 hours and $18,120.

PBGC is soliciting public comments to—

• Evaluate whether the collection of information is necessary for the proper performance of the functions of the agency, including whether the information will have practical utility;

• Evaluate the accuracy of the agency's estimate of the burden of the collection of information, including the validity of the methodology and assumptions used;

• Enhance the quality, utility, and clarity of the information to be collected; and

• Minimize the burden of the collection of information on those who are to respond, including through the use of appropriate automated, electronic, mechanical, or other technological collection techniques or other forms of information technology, *e.g.*, permitting electronic submission of responses.

Issued in Washington, DC, this 16th day of November, 2007.

John H. Hanley,

Director, Legislative and Regulatory Department Pension Benefit Guaranty Corporation.

[FR Doc. E7–22791 Filed 11–20–07; 8:45 am]

BILLING CODE 7709–01–P

SECURITIES AND EXCHANGE COMMISSION

[Investment Company Act Release No. 28047; 813–367]

Kiewit Investment Fund LLLP; Notice of Application

November 15, 2007.

AGENCY: Securities and Exchange Commission (''Commission'').

ACTION: Notice of an application for an order under section 6(b) of the Investment Company Act of 1940 (the ''Act'').

Summary of the Application: Applicant requests an order that would amend a prior order (''Prior Order'') [1] to expand the class of persons eligible to purchase and hold shares of an employees' securities company to include certain specified immediate family members and grandchildren of eligible employees. In addition, the order would permit certain trusts and other investment vehicles formed for the benefit of lineal descendants of eligible employees to purchase and hold shares of the employees' securities company.

Applicant: Kiewit Investment Fund LLLP (the ''Fund'').

Filing Dates: The application was filed on July 10, 2007, and amended on November 13, 2007.

Hearing or Notification of Hearing: An order granting the application will be issued unless the Commission orders a hearing. Interested persons may request a hearing by writing to the Commission's Secretary and serving applicant with a copy of the request, personally or by mail. Hearing requests should be received by the Commission by 5:30 p.m. on December 10, 2007, and should be accompanied by proof of service on applicant, in the form of an affidavit or, for lawyers, a certificate of service. Hearing requests should state the nature of the writer's interest, the reason for the request, and the issues contested. Persons who wish to be notified of a hearing may request notification by writing to the Commission's Secretary.

ADDRESSES: Secretary, U.S. Securities and Exchange Commission, 100 F Street, NE., Washington, DC 20549–1090. Applicant, Robert L. Giles, Jr., Chief Executive Officer, Kiewit Investment Fund LLLP, 73 Tremont Street, Boston, Massachusetts 02108.

FOR FURTHER INFORMATION CONTACT: Shannon Conaty, Senior Counsel, at (202) 551–6827 or Janet M. Grossnickle, Branch Chief, at (202) 551–6821 (Division of Investment Management, Office of Investment Company Regulation).

SUPPLEMENTARY INFORMATION: The following is a summary of the application. The complete application may be obtained for a fee at the Commission's Public Reference Desk, 100 F Street, NE., Washington, DC 20549–0102 (tel. (202) 551–5850).

Applicant's Representations

1. The Fund, a Delaware limited liability limited partnership, is registered under the Act as a non-diversified, closed-end management investment company, and at all times operates as an ''employees' securities company'' within the meaning of section 2(a)(13) of the Act. The Fund is designed as a long-term investment vehicle for current and former employees and their immediate family members of Peter Kiewit Sons', Inc. (''Kiewit'') and its affiliated companies. Kiewit, a Delaware corporation, is a large construction contractor operating primarily in the North American market that provides construction services to a broad range of public and private customers.

2. Pursuant to the Prior Order, units of limited partnership interests of the Fund (''Units'') may be purchased only by Eligible Holders. Eligible Holders consist of (i) current and former employees or persons on retainer of the Kiewit Group,[2] within the meaning of section 2(a)(13) of the Act (''Eligible Employees''); (ii) board directors retained by the Fund (''Directors''); (iii) immediate family members, within the meaning of section 2(a)(13) of the Act, of such Directors or Eligible Employees; or (iv) members of the Kiewit Group. Units are offered pursuant to offerings registered under the Securities Act of 1933, as amended (the ''Securities Act'').

3. Under the terms of the Prior Order, the Fund has in the past limited investment to those individuals who constitute immediate family members, within the meaning of section 2(a)(13) of the Act, of Eligible Employees and Directors of the Fund. Applicant proposes to amend the Prior Order solely to the extent necessary to expand the class of immediate family members of Eligible Employees and Directors who may invest in the Fund to include any parent, spouse of a parent, child, spouse of a child, spouse, brother, sister or grandchild of such Eligible Employee or Director (including step and adoptive relationships), regardless of whether such person currently resides with or is a dependent of such Eligible Employee or Director (''Eligible Family Members''). In addition, Applicant seeks to amend the Prior Order solely to the extent necessary to permit Units to be offered and sold to (i) certain trusts and other investment vehicles (including self-directed retirement plan vehicles such as individual retirement accounts) of which the trustees and/or grantors are Eligible Employees or Directors or that were established solely for the benefit of Eligible Employees or Directors or their Eligible Family Members, or for the benefit of other more distant lineal descendants, including great-grandchildren, of Eligible Employees or Directors (including, in each case, step and adoptive relationships), and (ii) partnerships, corporations or other entities of which at least a majority of the voting power is controlled by Eligible Employees or Directors (collectively clauses (i) and (ii), ''Qualified Investment Vehicles''). Such Qualified Investment Vehicles also shall constitute Eligible Holders to which Units may be transferred with the prior written consent of the Fund, provided that, as a result of such transfer, the Fund would not cease to be an

[1] Peter Kiewit Sons', Inc. and Kiewit Investment Fund LLLP, Investment Company Act Release Nos. 27066 (Sept. 14, 2005) (notice) and 27115 (Oct. 12, 2005) (order).

[2] The term ''Kiewit Group'' refers to Kiewit and any affiliated company of Kiewit of which Kiewit is an affiliated company, as defined in section 2(a)(2) of the Act.

employees' securities company under the Act.[3]

Applicant's Legal Analysis

1. Section 6(b) of the Act provides, in part, that the Commission will exempt employees' securities companies from the provisions of the Act to the extent that the exemption is consistent with the protection of investors. Section 2(a)(13) defines an employees' securities company as any investment company all of whose securities (other than short-term paper) are beneficially owned (a) by current or former employees, or persons on retainer, of one or more affiliated employers, (b) by immediate family members of such persons, or (c) by such employer or employers together with any of the persons in (a) or (b).

2. Applicant requests an order under section 6(b) of the Act to amend the Prior Order solely to the extent necessary to permit the Fund to expand the class of persons eligible to purchase and hold Units of the Fund, an employees' securities company, to include any individual that is covered by the term ''member of the immediate family'' in section 2(a)(19) of the Act, as well as grandchildren, of Eligible Employees and Directors. In addition, the amended order would permit certain trusts and other investment vehicles formed for the benefit of lineal descendants of Eligible Employees and Directors to purchase and hold Units of the Fund. For the reasons discussed below, applicant believes that the requested exemption pursuant to section 6(b) is consistent with the protection of investors and the purposes of the Act.

3. Applicant states that an employees' securities company is a labor-related entity that exists primarily to promote the economic welfare of its employee-investors. Applicant states that the requested relief would permit Eligible Employees and Directors to achieve certain tax and economic goals through the effective use of estate planning and retirement tools. Applicant states that the requested relief is consistent with the protection of investors because permitting Eligible Family Members of Eligible Employees and Directors to invest in the Fund, and Qualified Investment Vehicles to purchase and hold Units, would preserve the status of the Fund as an entity designed primarily to promote the economic welfare of Eligible Employees and Directors. Applicant further states that the permitting the Fund to directly offer and sell Units to Qualified Investment Vehicles eases the burden of administering the Fund and provides a means for certain such vehicles to hold Units. The participation of Qualified Investment Vehicles generally will result in cost savings and tax efficiencies for Eligible Employees, Directors and their Eligible Family Members. Moreover, Applicant notes that the Fund is registered under the Act, operates in compliance with all applicable provisions of the Act (other than section 15(a) to the extent it received relief in the Prior Order) and offers and sells its Units pursuant to offerings registered under the Securities Act.

For the Commission, by the Division of Investment Management, pursuant to delegated authority.

Florence E. Harmon,

Deputy Secretary.

[FR Doc. E7–22736 Filed 11–20–07; 8:45 am]

BILLING CODE 8011–01–P

[3] The inclusion of entities controlled by an Eligible Employee or Director in the definition of Eligible Holder is intended to enable Eligible Employees and Directors and their Eligible Family Members to make investments in the Fund through private investment vehicles for the purpose of personal and family investment and estate planning objectives. Eligible Employees and Directors will exercise investment discretion and control over these investment vehicles, thereby creating a close nexus between Kiewit and these investment vehicles.

SECURITIES AND EXCHANGE COMMISSION

[Release No. 34–56786; File No. SR–NYSEArca–2007–114]

Self-Regulatory Organizations; NYSE Arca, Inc.; Notice of Filing and Immediate Effectiveness of Proposed Rule Change Amending the Fill-or-Kill Order

November 14, 2007.

Pursuant to section 19(b)(1) of the Securities Exchange Act of 1934 (''Act'')[1] and Rule 19b–4 thereunder,[2] notice is hereby given that on November 7, 2007, NYSE Arca, Inc. (''NYSE Arca'' or ''Exchange'') filed with the Securities and Exchange Commission (''Commission'') the proposed rule change as described in Items I and II below, which Items have been prepared by the Exchange. NYSE Arca has designated the proposed rule change as ''non-controversial'' under section 19(b)(3)(A)(iii)[3] of the Act and Rule 19b–4(f)(6) thereunder,[4] which renders the proposal effective upon filing with the Commission. The Commission is publishing this notice to solicit comments on the proposed rule change from interested persons.

[1] 15 U.S.C. 78s(b)(1).

[2] 17 CFR 240.19b–4.

[3] 15 U.S.C. 78s(b)(3)(A)(iii).

[4] 17 CFR 240.19b–4(f)(6).

I. Self-Regulatory Organization's Statement of the Terms of Substance of the Proposed Rule Change

The Exchange, through its wholly owned subsidiary, NYSE Arca Equities, Inc. (''NYSE Arca Equities''), proposes to amend NYSE Arca Equities Rule 7.31(ll) to allow Users[5] to specify a minimum executable size for a Fill-or-Kill order. The text of the proposed rule change is available on the Exchange's Web site at *http://www.nyse.com*, at the Exchange's Office of the Secretary, and at the Commission's Public Reference Room.

II. Self-Regulatory Organization's Statement of the Purpose of, and Statutory Basis for, the Proposed Rule Change

In its filing with the Commission, NYSE Arca included statements concerning the purpose of, and basis for, the proposed rule change and discussed any comments it received on the proposed rule change. The text of these statements may be examined at the places specified in Item IV below. NYSE Arca has prepared summaries, set forth in sections A, B, and C below, of the most significant aspects of such statements.

A. Self-Regulatory Organization's Statement of the Purpose of, and Statutory Basis for, the Proposed Rule Change

1. Purpose

In order to provide additional flexibility and increased functionality to its system and its Users, the Exchange proposes to allow Users to specify a minimum executable size for a Fill-or-Kill order.

Pursuant to NYSE Arca Equities Rule 7.31(ll), Fill-or-Kill orders are limit orders that are executed in full as soon as such order is received. However, if execution is not possible, the entire order is immediately cancelled.

According to this proposal, Users may specify a minimum executable size for a Fill-or-Kill order, no less than 100 shares. If Users do not specify a minimum executable size, then the Fill-or-Kill order will be executed in its entirety or immediately cancelled. A Fill-or-Kill order with a specified minimum executable size will execute only against orders that (in aggregate) meet its minimum executable size. Any unexecuted portion of a Fill-or-Kill order will be immediately cancelled. A

[5] *See* NYSE Arca Rule 1.1(yy) for the definition of ''User.''

Fill-or-Kill order with a minimum executable size that cannot be immediately executed at its minimum size will be immediately cancelled in its entirety.

The Exchange believes that offering Users a minimum execution size will further enhance order entry flexibility and execution opportunities on NYSE Arca.

2. Statutory Basis

The Exchange believes that the proposed rule change is consistent with section 6(b) of the Act,[6] in general, and furthers the objectives of section 6(b)(5) of the Act,[7] in particular, because it is designed to prevent fraudulent and manipulative acts and practices, to promote just and equitable principles of trade, to foster cooperation and coordination with persons engaged in facilitating transactions in securities, and to remove impediments to and perfect the mechanism for a free and open market and a national market system.

B. Self-Regulatory Organization's Statement on Burden on Competition

The Exchange does not believe that the proposed rule change will impose any burden on competition that is not necessary or appropriate in furtherance of the purposes of the Act.

C. Self-Regulatory Organization's Statement on Comments on the Proposed Rule Change Received From Members, Participants, or Others

The Exchange has neither solicited nor received written comments on the proposed rule change.

III. Date of Effectiveness of the Proposed Rule Change and Timing for Commission Action

Because the proposed rule change does not: (i) Significantly affect the protection of investors or the public interest; (ii) impose any significant burden on competition; and (iii) become operative for 30 days after the date of filing, or such shorter time as the Commission may designate if consistent with the protection of investors and the public interest, the proposed rule change has become effective pursuant to section 19(b)(3)(A) of the Act[8] and subparagraph (f)(6) of Rule 19b–4 thereunder.[9] As required under Rule 19b–4(f)(6)(iii),[10] NYSE Arca provided the Commission with written notice of its intent to file the proposed rule change, along with a brief description and text of the proposed rule change, at least five business days prior to the date of the filing of the proposed rule change.

A proposed rule change filed under Rule 19b–4(f)(6) normally may not become operative prior to 30 days after the date of filing.[11] However, Rule 19b–4(f)(6)(iii)[12] permits the Commission to designate a shorter time if such action is consistent with the protection of investors and the public interest. NYSE Arca requests that the Commission waive the 30-day operative delay period for ''non-controversial'' proposals under Rule 19b–4(f)(6)[13] and make the proposed rule change effective and operative upon filing. The Commission believes that waiving the 30-day operative delay is consistent with the protection of investors and the public interest because it would permit the Exchange to offer the increased Fill-or-Kill order type functionality without delay. Accordingly, the Commission designates the proposed rule change operative upon filing with the Commission.[14]

At any time within 60 days of the filing of the proposed rule change, the Commission may summarily abrogate such rule change if it appears to the Commission that such action is necessary or appropriate in the public interest, for the protection of investors, or otherwise in the furtherance of the purposes of the Act.

IV. Solicitation of Comments

Interested persons are invited to submit written data, views, and argumentsconcerning the foregoing, including whether the proposed rule change is consistent with the Act. Comments may be submitted by any of the following methods:

Electronic Comments

- Use the Commission's Internet comment form (*http://www.sec.gov/rules/sro.shtml*); or
- Send an e-mail to *rule-comments@sec.gov*. Please include File Number SR–NYSEArca–2007–114 on the subject line.

Paper Comments

- Send paper comments in triplicate to Nancy M. Morris, Secretary, Securities and Exchange Commission, 100 F Street, NE., Washington, DC 20549–1090.

All submissions should refer to File Number SR–NYSEArca–2007–114. This file number should be included on the subject line if e-mail is used. To help the Commission process and review your comments more efficiently, please use only one method. The Commission will post all comments on the Commission's Internet Web site (*http://www.sec.gov/rules/sro.shtml*). Copies of the submission, all subsequent amendments, all written statements with respect to the proposed rule change that are filed with the Commission, and all written communications relating to the proposed rule change between the Commission and any person, other than those that may be withheld from the public in accordance with the provisions of 5 U.S.C. 552, will be available for inspection and copying in the Commission's Public Reference Room, 100 F Street, NE., Washington, DC 20549, on official business days between the hours of 10 a.m. and 3 p.m. Copies of such filing also will be available for inspection and copying at the principal office of NYSE Arca. All comments received will be posted without change; the Commission does not edit personal identifying information from submissions. You should submit only information that you wish to make available publicly. All submissions should refer to File Number SR–NYSEArca–2007–114 and should be submitted on or before December 12, 2007.

For the Commission, by the Division of Trading and Markets, pursuant to delegated authority.[15]

Florence E. Harmon,

Deputy Secretary.

[FR Doc. E7–22737 Filed 11–20–07; 8:45 am]

BILLING CODE 8011–01–P

[6] 15 U.S.C. 78f(b).

[7] 15 U.S.C. 78f(b)(5).

[8] 15 U.S.C. 78s(b)(3)(A).

[9] 17 CFR 240.19b–4(f)(6).

[10] 17 CFR 240.19b–4(f)(6)(iii).

[11] *Id.*

[12] *Id.*

[13] *Id.*

[14] For purposes only of waiving the 30-day operative delay, the Commission has considered the impact of the proposed rule on efficiency, competition, and capital formation. *See* 15 U.S.C. 78c(f).

[15] 17 CFR 200.30–3(a)(12).

DEPARTMENT OF STATE

[Public Notice 5965]

Renewal of International Security Advisory Board Charter

The Department of State announces the Charter renewal of the International Security Advisory Board (ISAB).

The purpose of the ISAB is to provide the Department with a continuing source of independent advice on all aspects of arms control, disarmament, nonproliferation, political-military issues, international security, and related aspects of public diplomacy. The

ISAB will remain in existence for two years after the filing date of the Charter unless terminated or renewed sooner.

For more information, contact Brandy Buttrick, Deputy Executive Director of the International Security Advisory Board, Department of State, Washington, DC 20520, telephone: (202) 647–9336.

Dated: October 26, 2007.

George W. Look,

Executive Director, International Security Advisory Board, Department of State.

[FR Doc. E7–22752 Filed 11–20–07; 8:45 am]

BILLING CODE 4710–27–P

DEPARTMENT OF STATE

[Public Notice 5995]

Advisory Committee on International Economic Policy; Notice of Open Meeting

The Advisory Committee on International Economic Policy (ACIEP) will meet from 2 p.m. to 3:30 p.m. on Wednesday, December 5, 2007, at the U.S. Department of State, 2201 C Street, NW., Room 1105, Washington, DC. The meeting will be hosted by Assistant Secretary of State for Economic, Energy and Business Affairs Daniel S. Sullivan and Committee Chairman R. Michael Gadbaw. The ACIEP serves the U.S. Government in a solely advisory capacity, and provides advice concerning issues and challenges in international economic policy. The meeting will focus on Total Economic Engagement, including a regional focus on Latin America, the pending U.S. free trade agreements with Colombia, Peru, Panama, and Korea, and Subcommittee reports and discussions led by the Strategic Regions (EESR) Subcommittee and the Economic Sanctions Subcommittee.

This meeting is open to the public as seating capacity allows. Entry to the building is controlled; to obtain pre-clearance for entry, members of the public planning to attend should provide, by Monday, December 3, their name, professional affiliation, valid government-issued ID number (i.e., U.S. Government ID [agency], U.S. military ID [branch], passport [country], or drivers license [state]), date of birth, and citizenship to Sherry Booth by fax (202) 647–5936, e-mail (*BoothSL@state.gov*), or telephone (202) 647–9204. One of the following forms of valid photo identification will be required for admission to the State Department building: U.S. driver's license, U.S. Government identification card, or any valid passport. Enter the Department of State from the C Street lobby. In view of escorting requirements, non-Government attendees should plan to arrive not less than 15 minutes before the meeting begins.

For additional information, contact Senior Coordinator Nancy Smith-Nissley, Office of Economic Policy Analysis and Public Diplomacy, Bureau of Economic, Energy and Business Affairs, at (202) 647–1682 or *Smith-NissleyN@state.gov.*

Dated: November 14, 2007.

David R. Burnett,

Office Director, Office of Economic Policy Analysis and Public Diplomacy, Department of State.

[FR Doc. E7–22750 Filed 11–20–07; 8:45 am]

BILLING CODE 4710–07–P

DEPARTMENT OF TRANSPORTATION

Federal Aviation Administration

Eleventh Tenth Meeting: RTCA Special Committee 206/EUROCAE WG 76 Plenary

AGENCY: Federal Aviation Administration (FAA), DOT.

ACTION: Notice of RTCA Special Committee 206 meeting.

SUMMARY: The FAA is issuing this notice to advise the public of a meeting of RTCA Special Committee 206: Aeronautical Information Services Data Link.

DATES: The meeting will be held December 3–7, 2007 from 9 a.m. to 5 p.m.

ADDRESSES: The meeting will be held at EUROCONTROL, Rue de la Fusee, 96, B–1130 Brussels, Belgium.

FOR FURTHER INFORMATION CONTACT: (1) RTCA Secretariat, 1828 L Street, NW., Suite 805, Washington, DC 20036–5133; telephone (202) 833–9339; fax (202) 833–9434; Web site *http://www.rtca.org;* (2) Hosted by LFV Group-Swedish Airports and Air Navigation Services; Onsite Contact: Ana Paula Frangolho telephone +32–2–729–4702; fax +32–2–9008.

SUPPLEMENTARY INFORMATION: Pursuant to section 10(a)(2) of the Federal Advisory Committee Act (Pub. L. 92–463, 5 U.S.C., Appendix 2), notice is hereby given for a Special Committee 206 meeting/EUROCE WG 76. The agenda will include:

December 3

- Opening Plenary (Chairman's Remarks and Introductions, Review and Approve, Discussion, Meeting Agenda and Minutes, Action Item Review).
- Presentation TBD.

Begin effort on SPR and INTEROP.

December 4

- Subgroup 1 Subgroup 2 Meetings.

December 5

- Subgroup 1 and Subgroup 2 Meetings.

December 6

- Subgroup 1 and Subgroup 2 Meetings.

December 7

- Subgroup 1 and Subgroup 2 Meetings.
- Plenary Session.
- Closing Session (Other Business, Date and Place of Next Meeting, Closing Remarks, Adjourn).

Attendance is open to the interested public but limited to space availability. With the approval of the chairman, members of the public may present oral statements at the meeting. Persons wishing to present statements or obtain information should contact the person listed in the **FOR FURTHER INFORMATION CONTACT** section. Members of the public may present a written statement to the committee at any time.

Issued in Washington, DC, on November 13, 2007.

Francisco Estrada C.,

RTCA Advisory Committee.

[FR Doc. 07–5763 Filed 11–20–07; 8:45 am]

BILLING CODE 4910–13–M

DEPARTMENT OF TRANSPORTATION

Federal Aviation Administration

RTCA Program Management Committee

AGENCY: Federal Aviation Administration (FAA), DOT.

ACTION: Notice of RTCA Program Management Committee meeting.

SUMMARY: The FAA is issuing this notice to advise the public of a meeting of the RTCA Program Management Committee.

DATES: The meeting will be held December 6, 2007 starting at 9 a.m.

ADDRESSES: The meeting will be held at RTCA, Inc., 1828 L Street, NW., Suite 805, Washington, DC 20036.

FOR FURTHER INFORMATION CONTACT: RTCA Secretariat, 1828 L Street, NW., Suite 850, Washington, DC 20036; telephone (202) 833–9339; fax (202) 833–9434; Web site *http://www.rtca.org.*

SUPPLEMENTARY INFORMATION: Pursuant to section 10(a)(2) of the Federal Advisory Committee Act (Pub. L. 92–463, 5 U.S.C., Appendix 2), notice is hereby given for a Program Management

Committee meeting. The agenda will include:

December 6

- Opening Session (Welcome, Introductory Remarks, Review/Approve Summary of October 11, 2007 PMC Meeting, RTCA Paper No. 258–07/PMC–572).
- Publication Consideration/Approval:
  - Final Draft, Change 1 to DO–294B, *Guidance on Allowing Transmitting Portable Electronic Devices* (T–PEDS) *on Aircraft,* RTCA Paper No. 272–07/PMC–579, prepared by SC-202.
  - Final Draft, New Document, *Operational Services and Environment Definition (OSED) for Aeronautical Information Services (AIS) and Meteorological (MET) Data Link Services,* RTCA Paper No. 265–07/PMC–576, prepared by SC–206.
  - Final Draft, Revised DO–204, *Minimum Operational Performance Standards for 406 MHz Emergency Locator Transmitters (ELT),* RTCA Paper No. 267–07/PMC–577, Prepared by SC–204.
  - Final Draft, Revised DO–160E, *Environmental Conditions and Test Procedures for Airborne Equipment,* RTCA Paper No. 273–07/PMC–580, Prepared by SC–135.
- Discussion:
  - SC–210—Cabin Management Systems—Discussion—Consider Proposed Co-Chairman.
  - SC–214—Standards for Air Traffic Data Communication Services—Discussion/Review/Approve Terms of Reference.
  - Special Committee Chairman's Reports.
- Action Item Review:
  - SC–147—Traffic Alert & Collision Avoidance System—Discussion—PMC Ad Hoc Subgroup–Report.
  - SC–203—Unmanned Aircraft Systems (UAS)—Discussion—Status Review—PMC Ad Hoc Subgroup—Report.
  - Closing Session (Other Business, Document Production, Date and Place of Next Meeting, Adjourn).

Attendance is open to the interested public but limited to space availability. With the approval of the chairman, members of the public may present oral statements at the meeting. Persons wishing to present statements or obtain information should contact the person listed in the **FOR FURTHER INFORMATION CONTACT** Section. Members of the public may present a written statement to the committee at any time.

Issued in Washington, DC, on November 13, 2007.

Francisco Estrada C.,

RTCA Advisory Committee.

[FR Doc. 07–5764 Filed 11–20–07; 8:45 am]

BILLING CODE 4910–13–M

DEPARTMENT OF TRANSPORTATION

Federal Aviation Administration

Second Meeting, RTCA Special Committee 216: Aeronautical System Security

AGENCY: Federal Aviation Administration (FAA), DOT.

ACTION: Notice of RTCA Special Committee 216 meeting Aeronautical Systems Security.

SUMMARY: The FAA is issuing this notice to advise the public of a meeting of RTCA Special Committee 216: Aeronautical Systems Security.

DATES: The meeting will be held on December 11–13, 2007, from 9 a.m. to 5 p.m.

ADDRESSES: The meeting will be held at ARINC Riva Road, Annapolis, MD.

FOR FURTHER INFORMATION CONTACT: RTCA Secretariat, 1828 L Street, NW., Suite 805, Washington, DC 20036–5133; telephone (202) 833–9339; fax (202) 833–9434; Web site *http://www.rtca.org.*

Note: Please e-mail Sarah Parpana (*SPARPANA@arinc.com*) if you plan to attend, so that security arrangements can be made for the meeting. The following information will be needed by ARINC security personnel. Please respond by December 4th.

SUPPLEMENTARY INFORMATION: Pursuant to section 10(a)(2) of the Federal Advisory Committee Act (P.L. 92–463, 5 U.S.C., Appendix 2), notice is hereby given for a Special Committee 216 meeting. The agenda will include:

December 11–13

- Opening Session (Welcome, Introductory and Administrative Remarks, Agenda Overview Minutes and Action Items from First Meeting).
- Presentations WG–72 topics.
- Presentations on ATS topics.
- Presentations on Existing Regulatory topics.
- Presentations on Special topics.
- Organization of Work, Assign Tasks and Workgroups.
  - Presentation, Discussion, Recommendations.
  - Assignment Action Items.
- Assignment of Responsibilities.
  - Closing Session (Other Business, Assignment/Review of Future Work, Establish Agenda, Date and Place of Next Meeting, Closing Remarks, Adjourn).

Attendance is open to the interested public but limited to space availability. With the approval of the chairmen, members of the public may present oral statements at the meeting. Persons wishing to present statements or obtain information should contact the person listed in the **FOR FURTHER INFORMATION CONTACT** section. Members of the public may present a written statement to the committee at any time.

Issued in Washington, DC, on December 13, 2007.

Francisco Estrada C.,

RTCA Advisory Committee.

[FR Doc. 07–5765 Filed 11–20–07; 8:45 am]

BILLING CODE 4910–13–M

DEPARTMENT OF TRANSPORTATION

Federal Highway Administration

Notice of Final Federal Agency Actions on Proposed Highway in Utah

AGENCY: Federal Highway Administration (FHWA), DOT.

ACTION: Notice of Limitation on Claims for Judicial Review of Actions by FHWA, Army Corps of Engineers (USACE) and Other Federal Agencies.

SUMMARY: This notice announces actions taken by the FHWA, USACE, and other Federal agencies that are final within the meaning of 23 U.S.C. 139(*l*)(1). The actions relate to a proposed highway project, Browns Park Road, Red Creek to Colorado State Line in Daggett County, Utah. Those actions grant licenses, permits, and approvals for the project.

DATES: By this notice, the FHWA is advising the public of final agency actions subject to 23 U.S.C. 139(*l*)(1). A claim seeking judicial review of the Federal agency actions on the highway project will be barred unless the claim is filed on or before May 19, 2008. If the Federal law that authorizes judicial review of a claim provides a time period of less than 180 days for filing such claim, then that shorter time period still applies.

FOR FURTHER INFORMATION CONTACT: For FHWA: Mr. Edward T. Woolford, Environmental Program Manager, Federal Highway Administration, 2520 West 4700 South, Suite 9A, Salt Lake City, Utah 84118, Telephone (801) 963–0182. The FHWA Utah Division Office's normal business hours are 7 a.m. to 4:30 p.m. [MST]. For UDOT: Ms. Rebecka Stromness, Environmental Program Manager, Utah Department of Transportation, 4501 South 2700 West, Salt Lake City, Utah 84119, Telephone

(801) 965–4327. For USACE: Mr. Nathan Green, U.S. Corp. of Engineers, Colorado/Gunnison Basin, 400 Road Avenue, Room 142, Grand Junction, Colorado 81501 or Telephone (970) 243–1199.

SUPPLEMENTARY INFORMATION: Notice is hereby given that the FHWA, USACE, and other Federal agencies have taken final agency actions subject to 23 U.S.C. 139(*l*)(1) by issuing licenses, permits, and approvals for the following highway project in the State of Utah:

Browns Park Road, Red Creek to Colorado State Line in the State of Utah. The selected alternative and least environmentally damaging practicable alternative (LEPDA) will address and rectify safety and mobility deficiencies and improve emergency response times on the existing Browns Park Road by linking Browns Park Road in Utah that junctions with U.S. Highway 191 (Scenic Byway) near the Utah-Wyoming border, to Colorado State Route 318, a distance of approximately 16.8 miles. The selected alternative generally follows the existing Browns Park Road alignment except for the Jesse Ewing Canyon portion, which would be routed to the west to reduce grades and provide a safer route of travel.

The actions by the Federal agencies, and the laws under which such actions were taken, are described in the Final Environmental Impact Statement (FEIS) for the project, approved on March 31, 2006, in the FHWA Record of Decision (ROD) issued on July 27, 2006, and in other documents in the FHWA project files. The FEIS, ROD, and other project records are available by contacting the FHWA or the Utah Department of Transportation at the addresses provided above. The FHWA FEIS and ROD can be viewed and downloaded from the project Web site at *http://www.udot.utah.gov/* or viewed at public libraries in the project area. The USACE decision and permit (USACE Permit SPK–2007–1461) are available by contacting U.S. Army Corp of Engineers.

This notice applies to all Federal agency decisions as of the issuance date of this notice and all laws under which such actions were taken, including but not limited to:

1. General: National Environmental Policy Act (NEPA) [42 U.S.C. 4321–4351]; Federal-Aid Highway Act [23 U.S.C. 109 and 23 U.S.C. 128].

2. Air: Clean Air Act [42 U.S.C. 7401–7671(q)].

3. Land: Section 4(f) of the Department of Transportation Act of 1966 [49 U.S.C. 303]; Landscaping and Scenic Enhancement (Wildflowers) [23 U.S.C. 319].

4. Wildlife: Endangered Species Act [16 U.S.C. 1531–1544 and Section 1536]; Marine Mammal Protection Act [16 U.S.C. 1361]; Fish and Wildlife Coordination Act [16 U.S.C. 661–667(d)]; Migratory Bird Treaty Act [16 U.S.C. 703–712].

5. Historic and Cultural Resources: Section 106 of the National Historic Preservation Act of 1966, as amended [16 U.S.C. 470(f) et seq.]; Archeological Resources Protection Act of 1977 [16 U.S.C. 470(aa)–470(ll)]; Archeological and Historic Preservation Act [16 U.S.C. 469–469(c)]; Native American Grave Protection and Repatriation Act (NAGPRA) [25 U.S.C. 3001–3013].

6. Social and Economic: Civil Rights Act of 1964 [42 U.S.C. 2000(d)–2000(d)(1)]; American Indian Religious Freedom Act [42 U.S.C. 1996]; Farmland Protection Policy Act (FPPA) [7 U.S.C. 4201–4209].

7. Wetlands and Water Resources: Clean Water Act (Section 404, Section 401, Section 319) [33 U.S.C. 1251–1377]; Land and Water Conservation Fund (LWCF) [16 U.S.C. 4601–4604]; Safe Drinking Water Act (SDWA) [42 U.S.C. 300(f)–300(j)(6)]; Rivers and Harbors Act of 1899 [33 U.S.C. 401–406]; Wild and Scenic Rivers Act [16 U.S.C. 1271–1287]; Emergency Wetlands Resources Act, [16 U.S.C. 3921, 3931]; Wetlands Mitigation [23 U.S.C. 103(b)(6)(M) and 133(b)(11)]; Flood Disaster Protection Act, 42 U.S.C. 4001–4128.

8. Executive Orders: E.O. 11990 Protection of Wetlands; E.O. 11988 Floodplain Management; E.O. 12898, Federal Actions to Address Environmental Justice in Minority Populations and Low Income Populations; E.O. 11593 Protection and Enhancement of Cultural Resources; E.O. 13007 Indian Sacred Sites; E.O. 13287 Preserve America; E.O. 13175 Consultation and Coordination with Indian Tribal Governments; E.O. 11514 Protection and Enhancement of Environmental Quality; E.O. 13112 Invasive Species.

(Catalog of Federal Domestic Assistance Program Number 20.205, Highway Planning and Construction. The regulations implementing Executive Order 12372 regarding intergovernmental consultation on Federal programs and activities apply to this program)

Authority: 23 U.S.C. 139(l)(1)

Issued on: Wednesday, November 14, 2007.

Walter C. Waidelich, Jr.,

Division Administrator, Salt Lake City.

[FR Doc. E7–22734 Filed 11–20–07; 8:45 am]

BILLING CODE 4910–RY–P

DEPARTMENT OF TRANSPORTATION

Federal Transit Administration

[Docket No: FTA–2007–0012]

National Transit Database: Strike Adjustments for Urbanized Area Apportionments

AGENCY: Federal Transit Administration (FTA), DOT.

ACTION: Notice of New Policy on Strike Adjustments for Urbanized Area Formula Grant Apportionment Data.

SUMMARY: This notice provides interested parties with the opportunity to comment on changes to the Federal Transit Administration's (FTA) National Transit Database (NTD) policy on strike adjustments. On March 12, 2007, FTA provided notice to NTD reporters that it was changing its policy on strikes, to permit transit agencies to request an adjustment to their NTD data that are used in the apportionment of Urbanized Area Formula Grants to offset the effect of strikes, retroactive to the 2005 Report Year. FTA invites the public to comment on this policy change.

DATES: Comments must be received on or before December 21, 2007. FTA will consider comments filed after this date to the extent practicable.

ADDRESSES: You may submit comments [identified by DOT Docket ID Number FTA–2007–0012] at the Federal eRulemaking Portal at: *http://www.regulations.gov*. Follow the online instructions for submitting comments

Fax: 202–493–2251.

Mail: Docket Management Facility: U.S. Department of Transportation, 1200 New Jersey Avenue SE., West Building Ground Floor, Room W12–140, Washington, DC 20590–0001.

Hand Delivery or Courier: West Building Ground Floor, Room W12–140, 1200 New Jersey Avenue SE., between 9 a.m. and 5 p.m. ET, Monday through Friday, except Federal holidays.

Instructions: When submitting comments, you must use docket number FTA–2007–0012. This will ensure that your comment is placed in the correct docket. If you submit comments by mail, you should submit two copies and include the above docket number. Note that all comments received will be posted, without change, to *http://www.regulations.gov* including any personal identifying information.

FOR FURTHER INFORMATION CONTACT: For program issues, John D. Giorgis, Office of Budget and Policy, (202) 366–5430 (telephone); (202) 366–7989 (fax); or *john.giorgis@dot.gov* (e-mail). For legal issues, Richard Wong, Office of the

Chief Counsel, (202) 366–0675 (telephone); (202) 366–3809 (fax); or *richard.wong@dot.gov* (e-mail).

SUPPLEMENTARY INFORMATION:

I. Background

The National Transit Database (NTD) is the Federal Transit Administration's (FTA's) primary database for statistics on the transit industry. Congress established the NTD to ''help meet the needs of * * * the public for information on which to base public transportation service planning * * *'' (49 U.S.C 5335). Currently, over 650 transit agencies in urbanized areas report to the NTD through an Internet-based reporting system. Each year, performance data from these submissions are used to apportion over $4 billion of FTA funds under the Urbanized Area Formula Grants Program. These data are also used in the annual National Transit Summaries and Trends report, the biennial Conditions and Performance Report to Congress, and in meeting FTA's obligations under the Government Performance and Results Act.

For many years, it was FTA's policy to not adjust performance data submitted to the NTD to offset the effect of strikes. On March 12, 2007, FTA provided notice to NTD reporters that it was changing its policy on strikes, to permit transit agencies to request an adjustment to their NTD data that are used in the apportionment of Urbanized Area Formula Program Funds to offset the effect of strikes, retroactive to the 2005 Report Year. An internal review in FTA found that this policy had not been subject to public notice-and-comment at that time. Pursuant to 49 U.S.C. 5334(l), FTA now invites comments on this change.

II. Proposed Policy Change

FTA proposes to allow urbanized area transit agencies to request that their NTD data submissions be adjusted to offset the effects of strikes for purposes of the apportionment of Urbanized Area Formula Program Grants. Requesting transit agencies must provide FTA with documentation for the duration of the strike. FTA will then use the transit agency's NTD submissions to project performance data for the time period in question. These projections would then be added to the transit agency's NTD submission in the data sets used by FTA for the calculation of the apportionments of Urbanized Area Formula Program Grants (Section 5307 and Section 5309 Grants). The NTD data in all publicly-available data sets and data products would remain unadjusted, and would reflect the actual NTD submission for the agency.

FTA proposes this policy change because the Section 5307 and Section 5309 Grant Programs are fundamentally designed to support the capital needs of transit agencies in urbanized areas. As such, various performance data are used to approximate the relative capital needs of the various urbanized areas. These capital needs are unaffected by strikes, even though strikes may produce a substantial decrease in the performance data for an urbanized area.

Further, FTA proposes to make this policy retroactive to the FY 2005 Report Year, to allow urbanized areas that were negatively impacted by strikes in the 2005 and 2006 Report Years in the formula apportionment to avail themselves of this policy.

Issued in Washington, DC, this 15th day of November 2007.

James S. Simpson,

Administrator.

[FR Doc. E7–22766 Filed 11–20–07; 8:45 am]

BILLING CODE 4910–57–P

DEPARTMENT OF TRANSPORTATION

Federal Transit Administration

[Docket No: FTA–2007–0013]

National Transit Database: Amendments to Safety & Security Reporting Manual

AGENCY: Federal Transit Administration (FTA), DOT.

ACTION: Notice of Availability of Proposed Amendments to the 2008 National Transit Database Safety & Security Reporting Manual.

SUMMARY: This notice provides interested parties with the opportunity to comment on changes to the Federal Transit Administration's (FTA) 2008 *National Transit Database (NTD) Safety & Security Reporting Manual (Safety & Security Manual).* Pursuant to 49 U.S.C. 5335, FTA requires those transit agencies that are reporting to the NTD from urbanized areas to provide reports within 30 days of a major safety or security incident, and to provide a monthly report on minor safety and security incidents. In an ongoing effort to improve the NTD reporting system, and to be responsive to the needs of NTD data users and of the transit agencies reporting to the NTD, FTA annually refines and clarifies the Safety & Security Module reporting requirements through revisions to the Safety & Security Manual.

DATES: Comments must be received on or before December 21, 2007. FTA will consider comments filed after this date to the extent practicable.

ADDRESSES: You may submit comments [identified by DOT Docket ID Number FTA–2007–0013] at the Federal eRulemaking Portal at: *http://www.regulations.gov*. Follow the online instructions for submitting comments.

Fax: 202–493–2251.

Mail: Docket Management Facility: U.S. Department of Transportation, 1200 New Jersey Avenue, SE., West Building Ground Floor, Room W12–140, Washington, DC 20590–0001.

Hand Delivery or Courier: West Building Ground Floor, Room W12–140, 1200 New Jersey Avenue, SE., between 9 a.m. and 5 p.m. ET, Monday through Friday, except Federal holidays.

Instructions: When submitting comments you must use docket number FTA–2007–0013. This will ensure that your comment is placed in the correct docket. If you submit comments by mail, you should submit two copies and include the above docket number. Note that all comments received will be posted, without change, to *http://www.regulations.gov* including any personal identifying information.

FOR FURTHER INFORMATION CONTACT: For program issues, John D. Giorgis, Office of Budget and Policy, (202) 366–5430 (telephone); (202) 366–7989 (fax); or *john.giorgis@dot.gov* (e-mail). For legal issues, Richard Wong, Office of the Chief Counsel, (202) 366–0675 (telephone); (202) 366–3809 (fax); or *richard.wong@dot.gov* (e-mail).

SUPPLEMENTARY INFORMATION:

I. Background

The National Transit Database (NTD) is the Federal Transit Administration's (FTA's) primary database for statistics on the transit industry. Congress established the NTD to ''help meet the needs of * * * the public for information on which to base public transportation service planning * * *'' (49 U.S.C 5335).

Currently, over 650 transit agencies in urbanized areas report to the NTD through an Internet-based reporting system. Since 2002, the NTD has included an expanded Safety & Security Module in order to meet the increased public interest in transit safety and security data. Data from the Safety & Security NTD Module are used by FTA's Office of Safety and Security, the Department of Homeland Security, the National Transportation Safety Board, and in the biennial *Conditions and Performance Report to Congress.* NTD reporters are required to submit a report on major incidents to the Safety & Security Module within 30 days of the

incident, and to submit a monthly summary report of minor incidents within 30 days of the end of the month. FTA is not proposing to change these requirements.

In an ongoing effort to improve the NTD reporting system, and to be responsive to the needs of NTD data users and of the transit agencies reporting to the NTD, FTA annually refines and clarifies the Safety & Security Module reporting requirements through revisions to the *Safety & Security Manual*. This notice provides interested parties with the opportunity to comment on changes to the 2008 *Safety & Security Manual*. For purposes of comparison, the 2007 *Safety & Security Manual* can be reviewed on the NTD Web site, *http://www.ntdprogram.gov*.

II. Proposed Changes in the 2008 Safety & Security Manual

Format Changes

FTA is overhauling the format of the NTD Safety & Security Module by instituting an interactive approach for major incident reporting. Instead of completing a static form, reporters will instead receive questions on an interactive basis, based on responses provided to the initial questions. This will greatly reduce reporting burden, by only providing reporters with questions relevant to the major incident reported. It will also reduce the number of validation errors, as reporters will be less likely to miss questions relevant to the major incident being reported, and so leave them blank.

The ''Non-Major Incident'' form has been renamed the ''Security Summary Report Form'' to better reflect the data collected. The form has also been redesigned for conciseness and to reduce reporting burden.

Eliminated Data Elements

FTA proposes dropping the requirement to provide the latitude and longitude of major incidents, except for ferryboat incidents, where such coordinates will still be required. FTA has found that latitude and longitude were inconsistently reported in the past, and believes that a verbal description of the incident location will provide the needed information for major incidents occurring on modes other than ferryboat.

FTA proposes dropping the requirement to provide the time zone in which the incident occurred. FTA notes that the time zone of the incident can be determined from the incident location in almost all cases.

Major Incident Threshold

FTA proposes to greatly simplify the threshold requirements for reporting a major incident. A major incident will now consist of any occurrence exceeding one of the following three thresholds:

- One or more fatalities;
- One or more reportable injuries (involving immediate medical transportation away from the scene); or
- Total property damage in excess of $25,000.

Previously, the property damage threshold was $7,500 for certain types of collisions. The increased threshold is established to decrease reporting burden, and to match the threshold used by FTA's State Safety Oversight Program.

Also, the previous threshold for injuries was one or more injuries for occurrences involving rail transit, on a rail right-of-way, or at a grade crossing, but the threshold was two or more injuries for all other occurrences. Occurrences with only one injury, but not meeting the threshold for a major incident, were reported on the monthly minor incident summary report form. FTA is establishing a threshold of one reportable injury for all occurrences, as it will be much simpler for reporters to understand, and in order to support the streamlining of the monthly minor incident summary form.

In addition, the following types of incidents will always constitute a major incident, without regard to the preceding thresholds:

- A mainline derailment;
- A fire requiring suppression; and
- A hazardous material spill posing an immediate threat to life, health, or the environment.

Previously, all mainline derailments were considered to be major incidents, and the new definitions continue to reflect this. FTA is now including fires and hazardous material spills as major incidents, but is only requiring limited information on the location and cause of the incident. Thus, the reporting burden will not be substantially increased for those fires and hazardous material spills that were previously reported as minor incidents.

FTA previously also required a major incident report for ''evacuations due to life safety reasons.'' FTA's experience with Safety & Security reporting, however, has indicated that ''evacuations due to life safety reasons'' always occur in conjunction with some other type of incident. As such, FTA has removed this ''evacuations due to life safety reasons'' as a threshold criterion. However, FTA still requires transit agencies to report ''evacuations due to life safety reasons'' whenever such an evacuation occurs in conjunction with another incident.

Additionally, FTA has eliminated the requirement for reporters to distinguish between the ''primary occurrence'' and the ''secondary occurrence'' for a major incident. Instead, reporters will simply report all data for an incident, without having to make a judgment as to what aspects of the incident were ''primary'' or ''secondary.'' This was done to reduce the reporting burden.

Definition of Fatalities

FTA will now consider suicides to be a fatality. This is done to reduce the substantial confusion caused by excluding suicides from the definition of ''fatalities.'' Additionally, research has indicated that many safety practices can reduce the number of suicides, and as such, FTA finds it prudent to include suicides in overall safety statistics.

Certification

FTA has added a standard form for the annual Chief Executive Officer (CEO) certification of data reported to the Safety & Security Module. This is done to reduce reporting burden on CEOs, and to provide a convenient summary of the key safety and security data elements for the CEO for review. This will also help the reporting transit agency identify any unintended errors or omissions from their Safety & Security Module submission.

''Acts of God''

At the request of several reporting transit agencies, FTA has added ''Acts of God'' as a causal factor of an occurrence producing fatalities, injuries, or more than $25,000 in property damage.

Lighting Conditions

For reporting on collisions, FTA is requesting transit agencies to report on the ''lighting conditions'' of the collision, in particular, if there was ''light in the eyes'' of the operator of either the transit vehicle or the other vehicle involved in the collision.

Other Changes

The NTD system now automatically requires the Safety & Security Configuration Form (the S&S–30 Form) to be completed prior to completing the first monthly report. Previously, reporters could provide monthly incident data without completing this Form. This automatic control is instituted to reduce the validation burden, as reporters will now receive an automatic notice if they attempt to

provide incident data without having completed the S&S–30 Form.

Also, FTA has modified the available answers to many of the questions from the old Safety & Security forms to reduce unneeded answers, and to fill in gaps where the previously provided answers did not account for all possible reporting situations. These changes are non-substantive in nature, as they do not add any additional reporting requirements, but may be found in the full 2008 Safety & Security Reporting Manual, available on the NTD Web site at *http://www.ntdprogram.gov.*

Issued in Washington, DC, this 15th day of November, 2007.

James S. Simpson,

Administrator.

[FR Doc. E7–22768 Filed 11–20–07; 8:45 am]

BILLING CODE 4910–57–P

DEPARTMENT OF TRANSPORTATION

Maritime Administration

Reports, Forms and Recordkeeping Requirements; Agency Information Collection Activity Under OMB Review

AGENCY: Maritime Administration, DOT.

ACTION: Notice and request for comments.

SUMMARY: In compliance with the Paperwork Reduction Act of 1995, this notice announces that the Information Collection abstracted below will be submitted to the Office of Management and Budget (OMB) for review and approval. The nature of the information collection is described as well as its expected burden. The **Federal Register** Notice with a 60-day comment period soliciting comments on the following collection of information was published on August 27, 2007. No comments were received.

DATES: Comments must be submitted on or before December 21, 2007.

FOR FURTHER INFORMATION CONTACT: Murray A. Bloom, Maritime Administration, 1200 New Jersey Avenue, SE., Washington, DC 20590. *Telephone:* (202) 366–5320; or *E-Mail: Murray.Bloom@dot.gov*. Copies of this collection can also be obtained from that office.

SUPPLEMENTARY INFORMATION: Maritime Administration (MARAD).

Title of Collection: Part 380, Subpart B—Application for Designation of Vessels as American Great Lakes Vessels.

Type of Request: Extension of currently approved information collection.

OMB Control Number: 2133–0521.

Expiration Date of Approval: Three years from date of approval by the Office of Management and Budget.

Affected Public: Shipowners of merchant vessels.

Form Numbers: None.

Abstract: In accordance with Public Law 101–624, the Secretary of Transportation issued requirements for the submission of applications for designation of vessels as American Great Lakes Vessels. Owners who wish to have this designation must certify that their vessel(s) meets certain criteria established in 46 CFR part 380.

Expiration Date of Approval: Three years from date of approval by the Office of Management and Budget.

Annual Estimated Burden Hours: 1.25 hours.

Addressee: Send comments to the Office of Information and Regulatory Affairs, Office of Management and Budget, 725 17th Street, NW., Washington, DC 20503, *Attention:* MARAD Desk Officer.

Comments are invited on: Whether the proposed collection of information is necessary for the proper performance of the functions of the agency, including whether the information will have practical utility; the accuracy of the agency's estimate of the burden of the proposed information collection; ways to enhance the quality, utility and clarity of the information to be collected; and ways to minimize the burden of the collection of information on respondents, including the use of automated collection techniques or other forms of information technology. A comment to OMB is best assured of having its full effect, if OMB receives it within 30 days of publication.

Dated: November 14, 2007.

Christine S. Gurland,

Acting Secretary, Maritime Administration.

[FR Doc. E7–22687 Filed 11–20–07; 8:45 am]

BILLING CODE 4910–81–P

DEPARTMENT OF TRANSPORTATION

Pipeline and Hazardous Materials Safety Administration

[Docket No. PHMSA–2007–27181 (Notice No. 07–10)]

Information Collection Activities

AGENCY: Pipeline and Hazardous Materials Safety Administration (PHMSA), DOT.

ACTION: Notice and request for comments.

SUMMARY: The Information Collection Request (ICR) entitled ''Hazardous Materials Public Sector Training and Planning Grants'' is being revised to implement a statutory provision authorizing PHMSA to request information from states concerning fees related to the transportation of hazardous materials. In addition, this ICR is being revised to include more detailed information from grantees to enable us to more accurately evaluate the effectiveness of the grant program in meeting emergency response planning and training needs. In compliance with the Paperwork Reduction Act of 1995, this notice announces that the ICR will be submitted to the Office of Management and Budget (OMB) for revision and extension.

DATES: Comments must be submitted on or before December 21, 2007.

ADDRESSES: Send comments regarding the burden estimates, including suggestions for reducing the burden, to the Office of Management and Budget, *Attention:* Desk Officer for PHMSA, 725 17th Street, NW., Washington, DC 20503.

We invite commenters to address the following issues: (1) Whether the proposed collection of information is necessary for the proper performance of the functions of the Department, including whether the information will have practical utility; (2) the accuracy of the Department's estimate of the burden of the proposed information collection; (3) ways to enhance the quality, utility, and clarity of the information to be collected; and (4) ways to minimize the burden of the collection of information on respondents, including the use of automated collection techniques or other forms of information technology.

A comment to OMB is most effective if OMB receives it within 30 days of publication.

FOR FURTHER INFORMATION CONTACT: Deborah Boothe or T. Glenn Foster, Office of Hazardous Materials Standards (PHH–11), Pipeline and Hazardous Materials Safety Administration, 1200 New Jersey Avenue, SE., East Building, 2nd Floor, Washington, DC 20590–0001, Telephone (202) 366–8553.

SUPPLEMENTARY INFORMATION:

I. Background

Section 1320.8(d), Title 5, Code of Federal Regulations requires PHMSA to provide interested members of the public and affected agencies an opportunity to comment on information collection and recordkeeping requests. This notice identifies an information collection PHMSA is submitting to OMB for revision under OMB Control Number 2137–0586. This collection is contained in 49 CFR part 110, Hazardous Materials Public Sector Training and Planning

Grants. We are revising the information collection to implement a statutory provision authorizing PHMSA to request information from states concerning fees related to the transportation of hazardous materials. In addition, we are revising the current information collection to include more detailed information from grantees to enable us to more accurately evaluate the effectiveness of the grant program in meeting emergency response planning and training needs.

A. HMEP Program

The Hazardous Materials and Emergency Preparedness (HMEP) grants program, as mandated by the Federal hazardous materials transportation law (Federal hazmat law; 49 U.S.C. 5101 *et seq.*) provides Federal financial and technical assistance to states and Indian tribes to ''develop, improve, and carry out emergency plans'' within the National Response System and the Emergency Planning and Community Right-To-Know Act of 1986 (Title III), 42 U.S.C. 11001 *et seq.* The grants are used to develop, improve, and implement emergency plans; to train public sector hazardous materials emergency response employees to respond to accidents and incidents involving hazardous materials; to determine flow patterns of hazardous materials within a state and between states; and to determine the need within a state for regional hazardous materials emergency response teams. The HMEP grants program is funded by registration fees collected from persons who offer for transportation or transport certain hazardous materials in intrastate, interstate, or foreign commerce.

Federal hazmat law specifies that HMEP grant funds are to be allocated based on the needs of states and Indian tribes for emergency response planning and training, considering a number of factors including whether the state or tribe imposes and collects a fee on the transportation of hazardous materials and whether the fee is used only to carry out a purpose related to the transportation of hazardous materials. 49 U.S.C. 5116(b)(4). Accordingly, the HMEP grant application procedures in 49 CFR part 110 require applicants to submit a statement explaining whether the applicant assesses and collects fees for the transportation of hazardous materials and whether those fees are used solely to carry out purposes related to the transportation of hazardous materials.

In addition, section 5125(f) of the Federal hazmat law permits a state, political subdivision of a state, or Indian tribe to impose a fee related to the transportation of hazardous materials only if the fee is fair and used for a purpose related to transporting hazardous materials, including enforcement and planning, developing, and maintaining a capability for emergency response. In accordance with § 5125, the Department of Transportation may require a state, political subdivision of a state, or Indian tribe to report on the fees it collects, including: (1) The basis on which the fee is levied; (2) the purposes for which the revenues from the fee are used; and (3) the total amount of annual revenues collected from the fee. Until now, we have not proposed asking states, political subdivisions, or Indian tribes to report this information.

B. 60-Day Notice

On July 5, 2007, we published a **Federal Register** notice [72 FR 36754] with a 60-day comment period, soliciting comments on revisions to the instructions for submitting an HMEP grant application. The revisions are intended to increase the transparency of the programs funded by HMEP grants and to enable us to more accurately evaluate the effectiveness of the HMEP program in meeting emergency response planning and training needs. Specifically, in accordance with the statutory mandate in 49 U.S.C. 5116(b)(4) and 5125(f), we proposed to revise the grant application to request applicants to respond to the following questions:

1. Does your state or tribe assess a fee or fees in connection with the transportation of hazardous materials?

2. If the answer to question 1 is ''yes,''

a. What state agency administers the fee?

b. What is the amount of the fee and the basis on which the fee is assessed? Examples of the bases on which fees may be assessed include: (1) An annual fee for each company which transports hazardous materials within your state or tribal territory; (2) a fee for each truck or vehicle used to transport hazardous materials within your state or tribal territory; (3) a fee for certain commodities or quantities of hazardous materials transported in your state or tribal territory; or (4) a fee for each hazardous materials shipment transiting your state or tribal territory.

c. Is company size considered when assessing the fee? For instance, do companies meeting the Small Business Administration's (SBA) definition of a small business pay the same or lesser fee amount than companies that do not meet the SBA definition?

d. For what purpose(s) is the revenue from the fee used? For example, is the revenue used to support hazardous materials transportation enforcement programs? Is the fee used to support planning, developing, and maintaining an emergency response capability?

e. What is the total annual amount of the revenue collected for the last fiscal year or 12-month accounting period?

In addition, to assist us to evaluate the effectiveness of the HMEP grant program, we proposed to ask grant recipients to report the following specific information regarding the planning and training activities funded by the HMEP grants and to provide an overall evaluation of the effectiveness of their programs:

Planning Grants

1. Did you complete or update assessments of commodity flow patterns in your jurisdiction? If so, how many and what were the results of those assessments? What was the amount of planning dollars devoted to this effort? What percentage of total planning dollars does this represent?

2. Did you complete or update assessments of the emergency response capabilities in your jurisdiction? What factors did you consider to complete such assessments? How many assessments were completed and what were the results of those assessments? What was the amount of HMEP planning grant funds devoted to this effort? What percentage of total HMEP planning grant funds does this represent?

3. Did you develop or improve emergency plans for your jurisdiction? If so, how many plans were either developed or updated? Briefly describe the outcome of this effort. What was the amount of HMEP planning grant funds devoted to this effort? What percentage of total HMEP planning grant funds does this represent?

4. Did you conduct emergency response drills or exercises in support of your emergency plan? How many exercises or drills did you conduct? Briefly describe the drill or exercise (tabletop, computer simulation, real-world simulation, or other drill or exercise), the number and types of participants, including shipper or carrier participants, and lessons learned. What was the amount of HMEP planning grant funds devoted to this effort? What percentage of total HMEP planning grant funds does this represent?

5. Did you use HMEP planning grant funds to provide technical staff in support of your emergency response planning program? If so, what was the amount of HMEP planning grant funds devoted to this effort? What percentage

of total HMEP planning grant funds does this represent?

6. How many Local Emergency Planning Committees (LEPCs) are located in your jurisdiction? How many LEPCs were assisted using HMEP funds? What was the amount of HMEP planning grant funds devoted to such assistance? What percentage of total HMEP planning grant funds does this represent?

Training Grants

1. Did you complete an assessment of the training needs of the emergency response personnel in your jurisdiction? What factors did you consider to complete the assessment? What was the result of that assessment? What was the amount of HMEP training grant funds devoted to this effort? What percentage of total HMEP training grants funds does this represent?

2. Provide details concerning the number of individuals trained in whole or in part using HMEP training grant funds. You should include separate indications for the numbers of fire, police, emergency medical services (EMS) or other personnel who were trained and the type of training provided based on the categories listed in standards published by the Occupational Safety and Health Administration at 29 CFR 1910.120 pertaining to emergency response training. (Note that ''other'' personnel include public works employees, accident clean-up crews, and liaison and support officers. Note also that if HMEP training grant funds were used in any way to support the training, such as for books or equipment, you should show that the training was partially funded by HMEP training grant funds.) What was the amount of training dollars devoted to this effort? What percentage of total training dollars does this represent?

3. Did you incur expenses associated with training and activities necessary to monitor such training, including, for example, examinations, critiques, and instructor evaluations? What was the amount of HMEP training grant funds devoted to this activity? What percentage of total HMEP training grant funds does this represent?

4. Did you provide incident command systems training? If so, provide separate indications for the numbers of fire, policy, EMS, or other personnel who were trained. What was the amount of HMEP training grant funds devoted to this effort? What percentage of total HMEP training grant funds does this represent?

5. Did you develop new training using HMEP training grant funds in whole or in part, such as training in handling specific types of incidents of specific types of materials? If so, briefly describe the new programs. Was the program qualified using the HMEP Curriculum Guidelines process? What was the amount of HMEP training grant funds devoted to this effort? What percentage of total HMEP training grant funds does this represent?

6. Did you use HMEP training grant funds to provide staff to manage your training program to increase benefits, proficiency, and rapid deployment of emergency responders? If so, what was the amount of HMEP training grant funds devoted to this effort? What percentage of total HMEP training grant funds does this represent?

7. Do you have a system in place for measuring the effectiveness of emergency response to hazardous materials incidents in your jurisdiction? Briefly describe the criteria you use (total response time, total time at an accident scene, communication among different agencies or jurisdictions, or other criteria). How many state and local response teams are located in your jurisdiction? What is the estimated coverage of these teams (e.g., the percent of state jurisdictions covered)?

Overall Program Evaluation

1. Using a scale of 1–5 (with 5 being excellent and 1 being poor), how well has the HMEP grants program met your need for preparing hazmat emergency responders?

2. Using a scale of 1–5 (with 5 being excellent and 1 being poor), how well do you think the HMEP grants program will meet your future needs?

3. What areas of the HMEP grants program would you recommend for enhancement?

II. Discussion of Comments

The comment period for the 60-Day notice closed on September 5, 2007. PHMSA received 16 comments from the following companies, organizations, and individuals: (1) The American Trucking Association (ATA); (2) Colorado Emergency Planning Commission; (3) Kevin Crawford; (4) Robert E. Dopp; (5) Delaware Emergency Management Agency; (6) the Institute of Makers of Explosives (IME); (7) Lyle Milby; (8) Timothy Gablehouse; (9) Steven Goza; (10) Donald K. Hall; (11) the National Tank Truck Carriers (NTTC); (12) the Nuclear Energy Institute (NEI); (13) Oklahoma Hazardous Materials Emergency Response Commission; (14) James J. Plum; (15) Daniel Roe; and (16) the State of Wisconsin/Department of Military Affairs Wisconsin Emergency Management. On October 12, 2007, we received an additional comment from the Interested Parties for Hazardous Materials Transportation (Interested Parties) which had been filed with OMB. In addition, the National Association of SARA Title III Program Officials and the Oklahoma Hazardous Materials Response Commission submitted letters to OMB and copied PHMSA in response to the October 12 comment from the Interested Parties. All comments are included in the docket for this notice and are available for review at the Federal eRulemaking Portal at *http://www.regulations.gov.*

Commenters expressing support for revisions to the HMEP application kit include ATA, IME, NEI, and NTTC. These commenters generally agree that additional information from grantees will assist PHMSA to evaluate the emergency response funding needs of states and Indian tribes and promote more effective use of HMEP grant funds. For example, in expressing its support, ATA, the national representative of over 37,000 trucking companies, states that the information being sought by PHMSA is critical to the effective administration of the HMEP grant program.

In its support of the proposed revisions, NEI states that although limited resources will be expended responding to the additional questions, the net result is a better use of funds nationwide and improved responses to events involving hazardous materials. Similarly, NTTC, a trade association comprised of 210 trucking companies, states the additional information resulting from the HMEP revisions is necessary to ''ensure proper funds allocation based on need under the HMEP grant program,'' and will enable PHMSA ''to better determine whether states' fees are properly apportioned and being utilized for purposes associated with hazardous materials transportation.''

In its comments, IME, the safety and security association of the commercial explosives industry, states that because its members are both shippers and carriers subject to fees that support the HMEP grants program, it has a keen interest in how these funds are used. The commenter supports PHMSA's efforts to accurately evaluate the effectiveness of its grants program through the proposed questions, and asserts that utilizing the HMEP grant application process is the least burdensome method to capture the information authorized by section 5125 of the Federal hazmat law.

In its October 12 comment sent to OMB and copied to PHMSA, the Interested Parties suggest that the additional questions will aid the

agency's risk-based approach while ensuring that legislative intent is achieved.

Commenters opposing the revisions include Colorado Emergency Planning Commission; Kevin Crawford; Delaware Emergency Management Agency; Robert E. Dopp; Lyle Milby; Timothy Gablehouse; Steven Goza; Donald K. Hall; Oklahoma Hazardous Materials Emergency Response Commission; James J. Plum; Daniel Roe; and the State of Wisconsin/Department of Military Affairs Wisconsin Emergency Management. The comments address three inter-related areas: (1) The need for the additional information, particularly the information on fees; (2) concern that funding may be reduced or eliminated based on grantees' responses to the additional questions; and (3) whether the additional information collection burden resulting from the additional questions is off-set by measurable benefits. These comments are addressed below. In addition, the National Association of SARA Title III Program Officials and the Oklahoma Hazardous Materials Response Commission submitted letters to OMB and copied PHMSA in response to the October 12 comment from the Interested Parties. Both commenters question the motivation of the Interested Parties for submitting its comment and express opposition to the revisions of this ICR.

A. Need for the Additional Information

Several commenters suggest that PHMSA's motivation in proposing to collect more detailed information on hazardous materials fees is to make it easier for hazardous materials shippers and carriers to challenge the fees. These commenters assert that aggrieved industry parties already have sufficient tools to pursue challenges to specific fees by utilizing the preemption provisions in Federal hazmat law and that information on hazardous materials fees assessed by state or tribal governments is already available through other sources. One commenter suggests that PHMSA ''should have the industries claiming that they pay fees to the states and tribes (and perhaps local entities), identify themselves to PHMSA, at the Secretary of Transportation's request. The facility could identify the state/tribe and agency to which they pay those fees and the amount of the fees, so that U.S. DOT nationally could wrap its arms around the issue to determine if there is, in fact, an identifiable problem.'' A second commenter suggests that PHMSA conduct a further study of the proposed revisions to the grant application kit, such as convening a stakeholder's forum to include both state and tribal governments and industry representation to discuss issues related to the assessment and uses of hazardous materials fees.

Commenters are not correct that PHMSA is proposing to require HMEP grant applicants to submit information concerning hazardous materials fees as a means to assist hazardous materials shippers or carriers to challenge those fees through preemption or other means. In awarding HMEP grants, PHMSA is required by the Federal hazmat law to consider whether the state or tribe imposes and collects a fee on the transportation of hazardous materials and whether the fee is used only to carry out a purpose related to the transportation of hazardous materials. The information we are requesting in the revised grant application kit is consistent with our statutory mandate.

We disagree with the commenters that suggest information concerning hazardous materials fees assessed by state or tribal governments is readily available through other sources. We have considered utilizing internet or other resources, but generally we have found that the information is not consistently available or reliably accurate. We note in this regard that commenters' suggestions concerning other methods for collecting information on state or tribal hazardous materials fees, such as through a separate survey or stakeholder meeting, would impose a similar or greater burden on respondents as the questions we propose to add to the grant application kit. Moreover, the overall response from state or tribal governments to such methods would likely be somewhat less than the overall response to the questions in the grant application kit and would not provide data to evaluate the effectiveness of the grant program.

B. Reduced Funding

A number of commenters express concern that HMEP grant funding for individual state or tribal governments may be reduced or eliminated as a result of responses by the applicants to the additional questions. For instance, Mr. Johnnie L. Smith of the State of Wisconsin/Department of Military Affairs Wisconsin Emergency Management states that ''It would be inappropriate to withhold or reduce a state's HMEP funding not supported by the appropriate legal action.'' The commenter continues by stating that ''* * * there is no reason why the emergency management community should be penalized by lost or reduced funding and why essential planning and training should not be performed.'' The Colorado Emergency Planning Commission writes that ''The collection of additional information in the manner advocated by petitioner and other commenters is unjustified because their suggested use of that information is improper.'' Mr. Kevin Crawford comments that ''As HMEP funding is the bulk of the resources * * * industry's efforts to penalize states by artificially evaluating the use of funds is ill-conceived at best.''

In proposing additional questions for inclusion in the grant application kit, PHMSA has no intent to penalize grant recipients by the reduction or elimination of grant funds. Rather, our purpose in proposing the revised questions is to enable us to work with grantees to promote the effective use of HMEP grant funds and identify additional state or Indian tribe emergency response planning and training needs.

We note in this regard that the HMEP grant program was established over 15 years ago and has continued with few changes since its initial implementation. HMEP grantees have used program funds to train first responders; conduct commodity flow studies; write or update emergency plans; conduct emergency response exercises; and assist local emergency planning committees. As indicated above, the HMEP grant program is funded by registration fees paid by hazardous materials shippers and carriers. It is incumbent on the agency administering the grant program as well as the grantees themselves to ascertain that the program is accountable to those who fund it and is as effective as possible in meeting its emergency response planning and training goals.

The information we are requesting will provide data to evaluate emergency response planning and training programs conducted by states and Indian tribes. The development of accurate output information will also summarize the achievements of the HMEP grant program. This is especially important in light of the increase in grant funding authorized under the Hazardous Materials Safety and Security Reauthorization Act (Title VII of the Safe, Accountable, Flexible, Efficient Transportation Equity Act: A Legacy for Users), enacted on August 10, 2005. Under the Act, authorized funding for the HMEP grant program effectively doubles, from $14.3 million to $28 million. The information we seek from grantees will enhance emergency response preparedness and response by allowing PHMSA and its state and tribal partners to target gaps in current planning and training efforts and focus

on strategies that have been proven to be effective.

C. Increased Information Collection Burden

Many of the commenters who oppose the proposed revisions to the grant application kit consider them to be an excessive burden on applicants without a measurable benefit or an identified use of the information. For example, Ms. Montressa Jo Elder of the Oklahoma Hazardous Materials Emergency Response Commission comments that ''These burdens are not trivial. Our local emergency planning committees and most of our rural fire departments are volunteer groups. Devoting time and energy to reports detracts from their other very important missions.'' Mr. Daniel Roe states that ''the proposed notice is going to place quite a burden not only on states, but on all funding recipients, to include tribes, locals and others.'' The commenter further states that ''funds that clearly are productively used for planning and training functions and are now adequately documented will be diverted to administrative burdens, the utility of which is quite questionable.'' Mr. Timothy Gablehouse states that ''it is unclear how the addition of the proposed questions to the ICR would enable PHMSA to glean any additional information about how effectively HMEP grant money is spent.'' Similarly, Mr. Robert E. Dopp states that ''We do not believe that DOT/PHMSA should impose the burden of information collection without a clear plan and purpose to use the information in a fashion that comports with statute and regulation. At this point all we really have is the advocacy of outsiders regarding the use of the information. Until and unless DOT/PHMSA is clear in its plans for the use of the information it appears that the proposed collection activity is simply an increased burden without a purpose.'' The Colorado Emergency Planning Commission also notes that, as stated in PHMSA's previous **Federal Register** notice, a large percentage of the information is already collected.

PHMSA appreciates commenters' concerns that the additional burden resulting from the proposed revisions to the way grantees report on the programs funded by the HMEP grants may detract from grantees planning and training efforts. We continue to believe, however, that grantees' performance reports should include both quantitative and qualitative data in sufficient detail to enable the grantees and PHMSA to evaluate the programs, identify effective planning and training strategies, and target areas where improvements are needed. Grantees are currently required to provide data on the planning and training programs they administer; the more detailed information we are requesting should be readily available.

Nonetheless, in an effort to address the commenters concerns, we have revised the list of questions we initially proposed to modify those for which information can be obtained through other means, such as through discussions at our meetings and conferences with grant recipients. We have also reconfigured the questions to provide a more user-friendly format. We believe these adjustments will help to minimize the impact of the information collection burden on grantees. We have also identified two additional grantees and have revised the total number of respondents. Subsequently, we reviewed the burden hours and have re-calculated the information collection burden associated with responding to the questions. The revised questions and information collection burden estimates are detailed under the ''Revised HMEP Questions and Information Collection Burden'' section of this notice.

III. Revised HMEP Questions and Information Collection Burden

Beginning with the application for FY 2008 funds, applicants will be asked to respond to the following additional questions:

Hazardous Materials Fees

1. Does your state or tribe assess a fee or fees in connection with the transportation of hazardous materials?

2. If the answer to question 1 is ''yes,''

a. What state agency administers the fee?

b. What is the amount of the fee and the basis on which the fee is assessed? Examples of the bases on which fees may be assessed include: (1) An annual fee for each company which transports hazardous materials within your state or tribal territory; (2) a fee for each truck or vehicle used to transport hazardous materials within your state or tribal territory; (3) a fee for certain commodities or quantities of hazardous materials transported in your state or tribal territory; or (4) a fee for each hazardous materials shipment transiting your state or tribal territory.

c. Is company size considered when assessing the fee? For instance, do companies meeting the Small Business Administration's (SBA) definition of a small business pay the same or lesser fee amount than companies that do not meet the SBA definition?

d. For what purpose(s) is the revenue from the fee used? For example, is the revenue used to support hazardous materials transportation enforcement programs? Is the fee used to support planning, developing, and maintaining an emergency response capability?

e. What is the total annual amount of the revenue collected for the last fiscal year or 12-month accounting period?

Planning Grants

1. Of the total amount of HMEP planning grant funds, what amount was used to assist Local Emergency Planning Committees (LEPCs)? How many were assisted using HMEP funds?

a. Did the LEPCs complete or update assessments of commodity flow patterns in their jurisdictions? If so, how many? What was the total amount of HMEP planning grant funds devoted to this effort?

b. Did the LEPCs complete or update assessments of the emergency response capabilities in their jurisdictions? If so, how many? What was the total amount of HMEP planning grant funds devoted to this effort?

c. Did the LEPCs develop or improve emergency plans for their jurisdictions? If so, how many plans were either developed or updated? What was the total amount of HMEP planning grant funds devoted to this effort?

d. Did the LEPCs conduct exercises to support their emergency plans? If so, how many exercises were conducted? Did any of these exercises include shipper or carrier participation? What was the total amount of HMEP planning grant funds devoted to emergency response drills or exercises of all types?

e. What was the total amount of HMEP planning grant funds devoted to other authorized activities by LEPCs (e.g., providing technical staff in support of emergency response planning efforts)?

2. Other than to assist LEPCs as addressed in Question 1, of the total amount of HMEP planning grant funds, what amount was used by the grantee (state or tribal government) to improve emergency response planning within the grantee's jurisdiction?

a. Did the grantee complete or update an assessment of commodity flow patterns in its entire jurisdiction? What was the total amount of HMEP planning grant funds devoted to this effort?

b. Did the grantee complete or update an assessment of emergency response capabilities in its entire jurisdiction? What was the total amount of HMEP planning grant funds devoted to this effort?

c. Did the grantee develop or improve an emergency plan for its entire jurisdiction? What was the total amount

of HMEP planning grant funds devoted to this effort?

d. Did the grantee conduct exercises to support its emergency plan? How many exercises were conducted? Did any of these exercises include shipper or carrier participation? What was the total amount of HMEP planning grant funds devoted to emergency response drills or exercises of all types?

e. What was the total amount of HMEP planning grant funds devoted to other authorized planning activities by the grantee (e.g., providing technical staff in support of emergency response planning efforts)?

3. Based on the activities outlined above, how well has the HMEP grants program met emergency response planning needs within your jurisdiction? Does your current ability to provide planning enable you to meet the needs you have identified? Do you have any recommendations for additional activities or programs that could further enhance your emergency response planning capabilities?

Training Grants

1. What was the total amount of HMEP training grant funds utilized to assess training needs and provide training for emergency response personnel in your jurisdiction?

a. Did you complete or update an assessment of the training needs of the emergency response personnel in your jurisdiction? What was the total amount of HMEP training grant funds devoted to this effort?

b. How many individuals were trained in whole or in part using HMEP training grant funds? You should include separate totals for numbers of fire, police, emergency medical services (EMS) or other personnel who were trained and the type of training provided. (Note that ''other'' personnel include public works employees, accident clean-up crews, and liaison and support officers. Note also that if HMEP training grant funds were used in any way to support the training, such as for books or equipment, you should show that the training was partially funded by HMEP training grant funds.) What was the total amount of HMEP training grant funds devoted to this effort?

c. Did you provide incident command systems training? If so, provide separate indications for the numbers of fire, policy, EMS, or other personnel who were trained. What was the total amount of HMEP training grant funds devoted to this effort?

d. Did you develop new training using HMEP training grant funds in whole or in part, such as training in handling specific types of incidents of specific types of materials? If so, briefly describe the new programs. Did a commodity flow assessment influence the development of new training programs? Was the program qualified using the HMEP Curriculum Guidelines process? What was the total amount of HMEP training grant funds devoted to this effort?

e. What was the total amount of HMEP planning grant funds devoted to other authorized training activities (e.g., activities necessary to monitor training, including examinations, critiques, and instructor evaluations; management activities to increase the benefits, proficiency, and rapid deployment of emergency responders)?

2. Do you have a system in place for measuring the effectiveness of emergency response to hazardous materials incidents in your jurisdiction? Describe the criteria you use (total response time, total time at an accident scene, communication among different agencies or jurisdictions, or other criteria). How many state and local response teams are located in your jurisdiction? What is the estimated coverage of these teams (e.g., the percent of state jurisdictions covered)?

3. Based on the activities outlined above, how well has the HMEP grants program met emergency response training needs within your jurisdiction? Does your current ability to provide training enable you to meet the needs you have identified? Do you have any recommendations for additional activities or programs that could further enhance the effectiveness of emergency response to hazardous materials incidents in your jurisdiction?

The total revised information collection budget for the HMEP grants program follows:

Title: Hazardous Materials Public Sector Training and Planning Grants.

OMB Control Number: 2137–0586.

Type of Request: Revision of a currently approved information collection.

Abstract: Part 110 of 49 CFR sets forth the procedures for reimbursable grants for public sector planning and training in support of the emergency planning and training efforts of states, Indian tribes and local communities to manage hazardous materials emergencies, particularly those involving transportation. Sections in this part address information collection and recordkeeping with regard to applying for grants, monitoring expenditures, and reporting and requesting modifications.

Affected Public: State and local governments, Indian tribes.

Recordkeeping:

Number of Respondents: 68.

Total Number of Responses: 68.

Total Annual Burden Hours: 5,428.

Frequency of collection: On occasion.

Issued in Washington, DC on November 15, 2007.

Edward T. Mazzullo,

Director, Office of Hazardous Materials Standards.

[FR Doc. E7–22689 Filed 11–20–07; 8:45 am]

BILLING CODE 4910–60–P

DEPARTMENT OF TRANSPORTATION

Pipeline and Hazardous Materials Safety Administration

[Docket: PHMSA–1998–4957]

Request for Public Comments and Office of Management and Budget Approval of an Existing Information Collection Requirement (2137–0618)

AGENCY: Pipeline and Hazardous Materials Safety Administration (PHMSA), U.S. Department of Transportation (DOT).

ACTION: Notice and request for comments.

SUMMARY: In compliance with the Paperwork Reduction Act of 1995 (PRA), this notice announces that PHMSA forwarded an Information Collection Request to the Office of Management and Budget (OMB) for an extension of the currently approved information collection: ''Pipeline Safety: Periodic Underwater Inspections'' (2137–0618). The purpose of this notice is to invite the public to submit comments on the request.

DATES: Submit comments on or before December 21, 2007.

ADDRESSES: Send comments directly to the Office of Management and Budget, Office of Information and Regulatory Affairs, *Attn:* Desk Officer for the Department of Transportation, 725 17th Street, NW., Washington, DC 20503.

FOR FURTHER INFORMATION CONTACT: Roger Little at (202) 366–4569, or by e-mail at *roger.little@dot.gov*.

SUPPLEMENTARY INFORMATION: The Federal pipeline safety regulations (49 CFR Parts 190–199) require operators to conduct appropriate underwater inspections in the Gulf of Mexico. If the operator finds pipeline exposed on the seabed floor or a hazard to navigation, the operator must contact the National Response Center by telephone within 24 hours of discovery and report the location of the exposed pipeline (49 CFR 192.612 and 195.413). PHMSA is now requesting that OMB grant a three-

year term of approval for renewal of this information collection requirement.

Pursuant to 44 U.S.C. 3506(c)(2)(A) of the PRA, PHMSA invites comments on whether the information collection is necessary for the proper performance of the functions of DOT. As used in this notice, the term ''information collection'' includes all work related to preparing and disseminating information related to this information collection requirement including completing paperwork, gathering information, and conducting telephone calls. Comments may include (1) whether the information will have practical utility; (2) the accuracy of DOT's estimate of the burden of the proposed information collection; (3) ways to enhance the quality, utility, and clarity of the information collection; and (4) ways to minimize the burden of the information collection on respondents, including the use of automated collection techniques or other forms of information technology.

Type of Information Collection Request: Renewal of Existing Collection.

Title of Information Collection: Pipeline Safety: Periodic Underwater Inspections.

Respondents: 82.

Estimated Total Annual Burden on Respondents: 1,350 hours.

Estimated Cost: $87,413.

Issued in Washington, DC on November 15, 2007.

Barbara Betsock,

Deputy Director of Regulations, Office of Pipeline Safety.

[FR Doc. E7–22691 Filed 11–20–07; 8:45 am]

BILLING CODE 4910–60–P

DEPARTMENT OF TRANSPORTATION

Pipeline and Hazardous Materials Safety Administration

Office of Hazardous Materials Safety; Notice of Application for Special Permits

AGENCY: Pipeline and Hazardous Materials Safety Administration (PHMSA), DOT.

ACTION: List of applications for special permits.

SUMMARY: In accordance with the procedures governing the application for, and the processing of, special permits from the Department of Transportation's Hazardous Material Regulations (49 CFR part 107, subpart B), notice is hereby given that the Office of Hazardous Materials Safety has received the application described herein. Each mode of transportation for which a particular special permit is requested is indicated by a number in the ''Nature of Application'' portion of the table below as follows: 1—Motor vehicle, 2—Rail freight, 3—Cargo vessel, 4—Cargo aircraft only, 5—Passenger-carrying aircraft.

DATES: Comments must be received on or before December 21, 2007.

Address Comments to: Record Center, Pipeline and Hazardous Materials Safety Administration, U.S. Department of Transportation, Washington, DC 20590.

Comments should refer to the application number and be submitted in triplicate. If confirmation of receipt of comments is desired, include a self-addressed stamped postcard showing the special permit number.

FOR FURTHER INFORMATION CONTACT: Copies of the applications are available for inspection in the Records Center, East Building, PHH–30, 1200 New Jersey Avenue, Southeast, Washington, DC or at *http://dms.dot.gov.*

This notice of receipt of applications for special permit is published in accordance with part 107 of the Federal hazardous materials transportation law (49 U.S.C. 5117(b); 49 CFR 1.53(b)).

Issued in Washington, DC, on November 14, 2007.

Delmer F. Billings,

Director, Office of Hazardous Materials, Special Permits and Approvals.

NEW SPECIAL PERMITS

Application No.	Docket No.	Applicant	Regulation(s) affected	Nature of special permits thereof
14597–N		The Columbiana Boiler Co., Columbiana, OH.	49 CFR 173.314	To authorize the transportation in commerce of anhydrous ammonia in a DOT 110 multi unit tank car tank. (Modes 1, 2, 3)
14598–N		Tremcar USA, Inc., Saint-Jean-sur-Richeli eu, CN.	49 CFR 178.345	To authorize the use of an alternative material in the manufacture of cargo tank components. (Mode 1)
14599–N		State of New York Department of Health, Albany, NY.	49 CFR 171.2(K)	To authorize the transportation in commerce of packagings identified as infectious substances, Category B, which are actually non-hazardous for purposes of shipping and packaging drills conducted through New York State to evaluate bioterrorism, chemical terrorism and pandemic influenza preparedness. (Modes 1, 2, 3, 4, 5)
14600–N		McLane Company, Inc. Temple, TX.	49 CFR 173.308	To authorize the transportation in commerce of up to 5,000 lighters manufactured by BIC Corporation per motor vehicle not subject to the requirements of subparts C through H of part 173 and part 177 in its entirety. (Mode 1)
14601–N		Precision Combustion Technology, LLC.	49 CFR 173.302a	To authorize the manufacture, marking, sale and use of a non-DOT specification pressure vessel for the transportation in commerce of boron trifluoride. (Modes 1, 2, 3)
14602–N		Lockheed Martin Space Systems Company, Sunnyvale, CA.	49 CFR 173.304a, 173.301, 172.101 Table Column (9B).	To authorize the transportation in commerce of anhydrous ammonia in non-DOT specification packaging. (Modes 1, 2, 3, 4)
14603–N		Yi Wu Huan Qiu Can Manufacture Yiwu City, Zhejiang.	49 CFR 173.304(d), 173.306(a) and 178.33a.	To authorize the manufacture, marking, sale and use of non-DOT specification inner nonrefillable metal receptacles similar to DOT specification 2Q containers for certain Division 2.2 materials. (Modes 1, 2, 3, 4)

[FR Doc. 07–5749 Filed 11–20–07; 8:45 am]

BILLING CODE 4909–60–M

DEPARTMENT OF TRANSPORTATION

Pipeline and Hazardous Materials Safety Administration

Office of Hazardous Materials Safety; Notice of Applications for Modification of Special Permit

AGENCY: Pipeline and Hazardous Materials Safety Administration (PHMSA), DOT.

ACTION: List of applications for modification of special permit.

SUMMARY: In accordance with the procedures governing the application for, and the processing of, special permits from the Department of Transportation's Hazardous Material Regulations (49 CFR part 107, subpart B), notice is hereby given that the Office of Hazardous Materials Safety has received the application described herein. This notice is abbreviated to expedite docketing and public notice. Because the sections affected, modes of transportation, and the nature of application have been shown in earlier **Federal Register** publications, they are not repeated here. Request of modifications of special permits (e.g. to provide for additional hazardous materials, packaging design changes, additional mode of transportation, etc.) are described in footnotes to the application number. Application numbers with the suffix ''M'' denote a modification request. These applications have been separated from the new applications for special permits to facilitate processing.

DATES: Comments must be received on or before December 6, 2007.

ADDRESSES: *Address Comments to:* Record Center, Pipeline and Hazardous Materials Safety Administration, U.S. Department of Transportation, Washington, DC 20590.

Comments should refer to the application number and be submitted in triplicate. If confirmation of receipt of comments is desired, include a self-addressed stamped postcard showing the special permit number.

FOR FURTHER INFORMATION CONTACT: Copies of the application are available for inspection in the Records Center, East Building, PHH–30, 1200 New Jersey Avenue, Southeast, Washington, DC or at *http://dms.dot.gov.*

This notice of receipt of applications for modification of special permit is published in accordance with part 107 of the Federal hazardous materials transportation law (49 U.S.C. 5117(b); 49 CFR 1.53(b)).

Issued in Washington, DC, on November 14, 2007.

Delmer F. Billings,

Director, Office of Hazardous Materials, Special Permits and Approvals.

MODIFICATION SPECIAL PERMITS

Application No.	Docket No.	Applicant	Regulation(s) affected	Nature of special permit thereof
10788–M	.....	P.S.I. Plus, Inc., East Hampton, CT.	49 CFR 173.302(a)(1); 175.3; 178.65–2; 178.65–5(a)(4).	To modify the special permit to authorize the manufacture, marking, sale, and use of non-DOT Specification cylinders made from low carbon steel.
14190–M	PHMSA–21262.	Cordis Corporation, Miami Lakes, FL.	49 CFR 172.200; 172.300, 172.400.	To modify the special permit to authorize the transportation in commerce of certain Division 4.1 hazardous materials.
14516–M	PHMSA–28468.	FedEx Express, Baton Rouge, LA.	49 CFR 175.75(d), 172.203(a), 172.301(c).	To modify the special permit to waive the requirement to carry a copy of the permit on every aircraft.

[FR Doc. 07–5750 Filed 11–20–07; 8:45 am]

BILLING CODE 4909–60–M

DEPARTMENT OF TRANSPORTATION

[STB Docket No. AB–303 (Sub-No. 31X)]

Wisconsin Central Ltd—Abandonment Exemption—in Sawyer County, WI

Wisconsin Central Ltd (WCL) has filed a notice of exemption under 49 CFR part 1152, subpart F—*Exempt Abandonments* to abandon a 1.80-mile line of railroad between milepost 100.80 and milepost 102.60, in Hayward, Sawyer County, WI. The line traverses United States Postal Service Zip Code 54843.

WCL has certified that: (1) No local traffic has moved over the line for at least 2 years; (2) there is no overhead traffic on the line to be rerouted; (3) no formal complaint filed by a user of rail service on the line (or by a state or local government entity acting on behalf of such user) regarding cessation of service over the line either is pending with the Surface Transportation Board or with any U.S. District Court or has been decided in favor of complainant within the 2-year period; and (4) the requirements at 49 CFR 1105.7 (environmental report), 49 CFR 1105.8 (historic report), 49 CFR 1105.11 (transmittal letter), 49 CFR 1105.12 (newspaper publication), and 49 CFR 1152.50(d)(1) (notice to governmental agencies) have been met.

As a condition to this exemption, any employee adversely affected by the abandonment shall be protected under *Oregon Short Line R. Co.—Abandonment—Goshen*, 360 I.C.C. 91 (1979). To address whether this condition adequately protects affected employees, a petition for partial revocation under 49 U.S.C. 10502(d) must be filed.

Provided no formal expression of intent to file an offer of financial assistance (OFA) has been received, this exemption will be effective on December 21, 2007, unless stayed pending reconsideration. Petitions to stay that do not involve environmental issues,[1] formal expressions of intent to file an OFA under 49 CFR 1152.27(c)(2),[2] and trail use/rail banking requests under 49 CFR 1152.29 must be filed by December 3, 2007. Petitions to reopen or requests for public use conditions under 49 CFR 1152.28 must be filed by December 11, 2007, with: Surface Transportation Board, 395 E

[1] The Board will grant a stay if an informed decision on environmental issues (whether raised by a party or by the Board's Section of Environmental Analysis (SEA) in its independent investigation) cannot be made before the exemption's effective date. *See Exemption of Out-of-Service Rail Lines*, 5 I.C.C.2d 377 (1989). Any request for a stay should be filed as soon as possible so that the Board may take appropriate action before the exemption's effective date.

[2] Each OFA must be accompanied by the filing fee, which currently is set at $1,300. *See* 49 CFR 1002.2(f)(25).

Street, SW., Washington, DC 20423–0001.

A copy of any petition filed with the Board should be sent to WCL's representative: Thomas J. Healey, 17641 S. Ashland Avenue, Homewood, IL 60430–1345.

If the verified notice contains false or misleading information, the exemption is void *ab initio.*

WCL has filed a combined environmental and historic report addressing the effects, if any, of the abandonment on the environment and historic resources. SEA will issue an environmental assessment (EA) by November 27, 2007. Interested persons may obtain a copy of the EA by writing to SEA (Room 1100, Surface Transportation Board, Washington, DC 20423–0001) or by calling SEA, at (202) 245–0305. [Assistance for the hearing impaired is available through the Federal Information Relay Service (FIRS) at 1–800–877–8339.] Comments on environmental and historic preservation matters must be filed within 15 days after the EA becomes available to the public.

Environmental, historic preservation, public use, or trail use/rail banking conditions will be imposed, where appropriate, in a subsequent decision.

Pursuant to the provisions of 49 CFR 1152.29(e)(2), WCL shall file a notice of consummation with the Board to signify that it has exercised the authority granted and fully abandoned the line. If consummation has not been effected by WCL's filing of a notice of consummation by November 21, 2008, and there are no legal or regulatory barriers to consummation, the authority to abandon will automatically expire.

Board decisions and notices are available on our Web site at *http://www.stb.dot.gov.*

Decided: November 14, 2007.

By the Board, David M. Konschnik, Director, Office of Proceedings.

Vernon A. Williams,

Secretary.

[FR Doc. E7–22677 Filed 11–20–07; 8:45 am]

BILLING CODE 4915–01–P

DEPARTMENT OF THE TREASURY

Alcohol and Tobacco Tax and Trade Bureau

Proposed Information Collections; Comment Request

AGENCY: Alcohol and Tobacco Tax and Trade Bureau (TTB), Treasury.

ACTION: Notice and request for comments.

SUMMARY: As part of our continuing effort to reduce paperwork and respondent burden, and as required by the Paperwork Reduction Act of 1995, we invite comments on the proposed or continuing information collections listed below in this notice.

DATES: We must receive your written comments on or before January 22, 2008.

ADDRESSES: You may send comments to Mary A. Wood, Alcohol and Tobacco Tax and Trade Bureau, at any of these addresses:

- P.O. Box 14412, Washington, DC 20044–4412;
- 202–927–8525 (facsimile); or
- *formcomments@ttb.gov* (e-mail).

Please send separate comments for each specific information collection listed below. You must reference the information collection's title, form or recordkeeping requirement number, and OMB number (if any) in your comment. If you submit your comment via facsimile, send no more than five 8.5 × 11 inch pages in order to ensure electronic access to our equipment.

FOR FURTHER INFORMATION CONTACT: To obtain additional information, copies of the information collection and its instructions, or copies of any comments received, contact Mary A. Wood, Alcohol and Tobacco Tax and Trade Bureau, P.O. Box 14412, Washington, DC 20044–4412; or telephone 202–927–8210.

SUPPLEMENTARY INFORMATION:

Request for Comments

The Department of the Treasury and its Alcohol and Tobacco Tax and Trade Bureau, as part of their continuing effort to reduce paperwork and respondent burden, invite the general public and other Federal agencies to comment on the proposed or continuing information collections listed below in this notice, as required by the Paperwork Reduction Act of 1995 (44 U.S.C. 3501 *et seq.*).

Comments submitted in response to this notice will be included or summarized in our request for Office of Management and Budget (OMB) approval of the relevant information collection. All comments are part of the public record and subject to disclosure. Please do not include any confidential or inappropriate material in your comments.

We invite comments on: (a) Whether this information collection is necessary for the proper performance of the agency's functions, including whether the information has practical utility; (b) the accuracy of the agency's estimate of the information collection's burden; (c) ways to enhance the quality, utility, and clarity of the information collected; (d) ways to minimize the information collection's burden on respondents, including through the use of automated collection techniques or other forms of information technology; and (e) estimates of capital or start-up costs and costs of operation, maintenance, and purchase of services to provide the requested information.

Information Collections Open for Comment

Currently, we are seeking comments on the following records and forms:

Title: Drawback of Beer Exported.

OMB Number: 1513–0017.

TTB Form Number: 5130.6.

Abstract: When taxpaid beer is removed from a brewery and ultimately exported, the brewer exporting the beer is eligible for a drawback (refund) of Federal taxes paid. By completing this form and submitting documentation of exportation, the brewer may receive a refund of Federal taxes paid.

Current Actions: There are minor grammatical corrections to this information collection, and it is being submitted as a revision.

Type of Review: Revision of a currently approved collection.

Affected Public: Business or other for-profit.

Estimated Number of Respondents: 100.

Estimated Total Annual Burden Hours: 5,000.

Title: Schedule of Tobacco Products, Cigarette Papers or Tubes Withdrawn from the Market.

OMB Number: 1513–0034.

TTB Form Number: 5200.7.

Abstract: TTB F 5200.7 is used by persons who intend to withdraw tobacco products and cigarette papers and tubes from the market for which the taxes have already been paid or determined. The form describes the products that are to be withdrawn to determine the amount of tax to be claimed later as a tax credit or refund. The form notifies TTB when withdrawal or destruction is to take place, and TTB may elect to supervise it.

Current Actions: The number of respondents has increased therefore the burden hours have increased. Also, we have made minor grammatical corrections to this information collection, and we are submitting it as a revision.

Type of Review: Revision of a currently approved collection.

Affected Public: Business or other for-profit.

Estimated Number of Respondents: 171.

Estimated Total Annual Burden Hours: 1,539.

Title: Usual and Customary Business Records Relating to Denatured Spirits.

OMB Number: 1513–0062.

TTB Recordkeeping Requirement Number: 5150/1.

Abstract: Denatured spirits are used for nonbeverage industrial purposes in the manufacture of personal household products. The records are maintained at the premises of the regulated individual and are routinely inspected by TTB personnel during field tax compliance examinations. These examinations are necessary to verify that all specially denatured spirits can be accounted for and are being used only for purposes authorized by laws and regulations. By ensuring that spirits have not been diverted to beverage use, tax revenue and public safety are protected. There is no additional recordkeeping imposed on the respondent as these requirements are usual and customary business records.

Current Actions: The number of respondents has increased; however, the burden remains at 1 hour because these are records that the respondent would keep in the normal course of doing business. Also, we made minor grammatical corrections to this information collection, and we are submitting it as a revision.

Type of Review: Revision of a currently approved collection.

Affected Public: Business or other for-profit; and State, Local, or Tribal Government.

Estimated Number of Respondents: 3,430.

Estimated Total Annual Burden Hours: One (1).

Title: Tobacco Products Manufacturers—Supporting Records for Removal for the Use of the United States.

OMB Number: 1513–0069.

TTB Recordkeeping Requirement Number: 5210/6.

Abstract: Tobacco products have historically been a major source of excise tax revenues for the Federal Government. In order to safeguard these taxes, tobacco products manufacturers are required to maintain a system of records designed to establish accountability over the tobacco products and cigarette papers and tubes produced. However, these items can be removed without the payment of tax if they are for the use of the United States. Records must be retained by the manufacturer for 3 years following the close of the year covered therein and must be made available for inspection by any TTB officer upon his/her request.

Current Actions: There are no changes to this information collection, and it is being submitted for extension purposes only.

Type of Review: Extension of a currently approved collection.

Affected Public: Business or other for-profit.

Estimated Number of Respondents: 101.

Estimated Total Annual Burden Hours: 505.

Title: Special Tax Renewal Registration and Return/Special Tax Location Registration Listing.

OMB Number: 1513–0113.

TTB Form Number: 5630.5R.

Abstract: 26 U.S.C. Chapters 51, 52, and sections 4181 and 4182 authorize collection of special taxes from persons engaging in certain businesses. TTB F 5630.5R is used to compute tax and as an application for registry.

Current Actions: There are no changes to this information collection, and it is being submitted as an extension.

Type of Review: Extension of a currently approved collection.

Affected Public: Business or other for-profit.

Estimated Number of Respondents: 350,000.

Estimated Total Annual Burden Hours: 100,500.

Title: Collection Information Statement for Individuals; and Collection Information Statement for Businesses.

OMB Number: None.

TTB Form Number: 5600.17 and 5600.18, respectively.

Abstract: TTB F 5600.17 is used to collect financial information from individuals and 5600.18 is used to collect financial information from businesses. When an industry member cannot pay their assessed tax all at one time, they complete the applicable form to identify their income, taxes, and other expenses necessary to run their home or business. TTB uses this information to determine how much the industry member can afford to pay over time until the taxes are paid in full and to set up an installment agreement.

Current Actions: Minor changes are being made to these forms, and they are being submitted as a collection in use without an OMB control number.

Type of Review: Existing collection in use without an OMB control number.

Affected Public: Business or other for-profit, Individuals or households.

Estimated Number of Respondents: 90.

Estimated Total Annual Burden Hours: 90.

Dated: November 14, 2007.

Francis W. Foote,

Director, Regulations and Rulings Division.

[FR Doc. E7–22688 Filed 11–20–07; 8:45 am]

BILLING CODE 4810–31–P

Federal Register

Wednesday,
November 21, 2007

Part II

The President

Proclamation 8206—National Family Week, 2007

Executive Order 13451—Designating the ITER International Fusion Energy Organization as a Public International Organization Entitled To Enjoy Certain Privileges, Exemptions, and Immunities

Federal Register
Vol. 72, No. 224
Wednesday, November 21, 2007

Presidential Documents

Title 3—

The President

Proclamation 8206 of November 16, 2007

National Family Week, 2007

By the President of the United States of America

A Proclamation

As families gather together to celebrate Thanksgiving, we underscore the comforting and positive role they play in our society. During National Family Week, we celebrate the contributions of families everywhere.

Families strengthen our communities by teaching important values such as compassion and honesty to their children. Families also offer a supportive environment and help ensure that children grow into responsible members of society. By providing guidance and unconditional love, parents shape the character of their children.

My Administration believes that the strength of our Nation is built upon the foundation of strong families. To help support families, we have doubled the child tax credit, reduced the marriage penalty, and lowered tax rates. We are also committed to promoting positive youth development. The Helping America's Youth initiative, led by First Lady Laura Bush, supports organizations, including faith-based and community groups, that continue this important mission.

All Americans are grateful to our Nation's military families, who have stood by their loved ones in times of war and peace. Our country will always be especially thankful for the sacrifices of our military personnel and for their devotion to duty and their love of country. During National Family Week, we pray for their safe return and for the families who await them at home.

NOW, THEREFORE, I, GEORGE W. BUSH, President of the United States of America, by virtue of the authority vested in me by the Constitution and laws of the United States, do hereby proclaim November 18 through November 24, 2007, as National Family Week. I invite the States, communities, and all the people of the United States to join together in observing this week with appropriate ceremonies and activities to honor our Nation's families.

IN WITNESS WHEREOF, I have hereunto set my hand this sixteenth day of November, in the year of our Lord two thousand seven, and of the Independence of the United States of America the two hundred and thirty-second.

[FR Doc. 07–5815
Filed 11–20–07; 10:06 am]
Billing code 3195–01–P

Presidential Documents

Executive Order 13451 of November 19, 2007

Designating the ITER International Fusion Energy Organization as a Public International Organization Entitled To Enjoy Certain Privileges, Exemptions, and Immunities

By the authority vested in me as President by the Constitution and the laws of the United States of America, including section 1 of the International Organizations Immunities Act (22 U.S.C. 288), and finding that the United States participates in the ITER International Fusion Energy Organization under the authority of acts of Congress authorizing such participation and making an appropriation for such participation, including sections 971 and 972 of the Energy Policy Act of 2005 (42 U.S.C. 16311 and 16312) and laws making appropriations for the Department of Energy, it is hereby ordered as follows:

Section 1. *Designation.* I hereby designate the ITER International Fusion Energy Organization as a public international organization entitled to enjoy the privileges, exemptions, and immunities provided by the International Organizations Immunities Act.

Sec. 2. *Non-Abridgement.* This designation is not intended to abridge in any respect privileges, exemptions, or immunities that the ITER International Fusion Energy Organization otherwise may have acquired or may acquire by law.

THE WHITE HOUSE,
November 19, 2007.

[FR Doc. 07–5816
Filed 11–20–07; 10:06 am]
Billing code 3195–01–P

Reader Aids

Federal Register

Vol. 72, No. 224

Wednesday, November 21, 2007

CUSTOMER SERVICE AND INFORMATION

Federal Register/Code of Federal Regulations	
General Information, indexes and other finding aids	**202–741–6000**
Laws	**741–6000**
Presidential Documents	
Executive orders and proclamations	**741–6000**
The United States Government Manual	**741–6000**
Other Services	
Electronic and on-line services (voice)	**741–6020**
Privacy Act Compilation	**741–6064**
Public Laws Update Service (numbers, dates, etc.)	**741–6043**
TTY for the deaf-and-hard-of-hearing	**741–6086**

ELECTRONIC RESEARCH

World Wide Web

Full text of the daily Federal Register, CFR and other publications is located at: **http://www.gpoaccess.gov/nara/index.html**

Federal Register information and research tools, including Public Inspection List, indexes, and links to GPO Access are located at: **http://www.archives.gov/federal__register**

E-mail

FEDREGTOC-L (Federal Register Table of Contents LISTSERV) is an open e-mail service that provides subscribers with a digital form of the Federal Register Table of Contents. The digital form of the Federal Register Table of Contents includes HTML and PDF links to the full text of each document.

To join or leave, go to **http://listserv.access.gpo.gov** and select *Online mailing list archives, FEDREGTOC-L, Join or leave the list (or change settings);* then follow the instructions.

PENS (Public Law Electronic Notification Service) is an e-mail service that notifies subscribers of recently enacted laws.

To subscribe, go to **http://listserv.gsa.gov/archives/publaws-l.html** and select *Join or leave the list (or change settings);* then follow the instructions.

FEDREGTOC-L and **PENS** are mailing lists only. We cannot respond to specific inquiries.

Reference questions. Send questions and comments about the Federal Register system to: **fedreg.info@nara.gov**

The Federal Register staff cannot interpret specific documents or regulations.

FEDERAL REGISTER PAGES AND DATE, NOVEMBER

61791–62104 1
62105–62408 2
62409–62558 5
62559–62766 6
62767–63096 7
63097–63444 8
63445–63782 9
63783–63966 13
63967–64118 14
64119–64522 15
64523–64918 16
64919–65214 19
65215–65440 20
65441–65654 21

CFR PARTS AFFECTED DURING NOVEMBER

At the end of each month, the Office of the Federal Register publishes separately a List of CFR Sections Affected (LSA), which lists parts and sections affected by documents published since the revision date of each title.

2 CFR

175 63783

3 CFR

Proclamations:
8195 62395
8196 62397
8197 62399
8198 62401
8199 62403
8200 62555
8201 62557
8202 64117
8203 65211
8204 65213
8205 65439
8206 65651

Executive Orders:
12170 (See Notice of Nov. 8, 2007: National Emergency With Iran) 63965
12938 (See Notice of Nov. 8, 2007: Emergency Regarding Weapons of Mass Destruction) 63963
13067 (See Notice of November 1, 2007) 62407
13094 (See Notice of Nov. 8, 2007: Emergency Regarding Weapons of Mass Destruction) 63963
13382 (See Notice of Nov. 8, 2007: Emergency Regarding Weapons of Mass Destruction) 63963
13400 (See Notice of November 1, 2007) 62407
13450 64519
13451 65653

Administrative Orders:
Notices:
Notice of November 1, 2007 62407
Notice of November 8, 2007 (Emergency Regarding Weapons of Mass Destruction) 63963
Notice of November 8, 2007 (National Emergency With Iran) 63965

5 CFR

353 62767
532 .....63967, 63968
575 64523

6 CFR

27 .....65215, 65217, 65219, 65221, 65224

7 CFR

210 63785
215 63785
220 63785
235 63785
245 63785
301 .....62409, 65172
305 65172
457 62767
718 63242
761 63242
762 63242
763 63242
764 63242
765 63242
766 63242
767 63242
768 63242
769 63242
771 64119
772 64119
773 64119
774 64119
966 64123
993 62409
1170 62105
1405 63242
1806 64119
1901 64119
1910 64119
1924 64119
1925 64119
1927 64119
1940 64119
1941 64119
1943 64119
1950 64119
1951 64119
1955 64119
1956 64119
1962 64119
1965 64119

Proposed Rules:
47 61820
51 62417
56 62591
70 62591
305 64163
318 64163
331 64540

8 CFR

245 61791

Proposed Rules:
100 62593
103 61821
204 61821
212 62593
214 61821
299 61821

9 CFR
94 63796
98 64126
381 61793
Proposed Rules:
121 64540

10 CFR
2 64529
13 64529
30 63969
40 63969
50 63969
52 63969
60 63969
61 63969
63 63969
70 63969
71 63969
72 63969
76 63969
430 65136
Proposed Rules:
50 65470
51 64003
54 63141
71 65470
430 64432
431 64432

11 CFR
111 64919
Proposed Rules:
88 62798
100 62600
104 62600

12 CFR
41 ....62910, 63718
201 63097
202 63445
205 63452
213 63456
222 ....62910, 63718
226 63462
230 63477
334 ....62910, 63718
364 63718
551 62768
571 ....62910, 63718
630 64129
701 65441
717 ....62910, 63718
Proposed Rules:
308 62310
363 62310
Ch. V 64003

13 CFR
400 63975

14 CFR
1 63364
21 ....63364, 63797, 64529
23 62105
25 63364
26 63364
29 64529
39 ....61796, 62559, 62560, 62562, 62564, 62566, 62568, 63098, 63800, 63805, 64130, 64132, 64135, 64139, 64143, 64532, 65215, 65217, 65219, 65221, 65224, 65443, 65445, 65446
71 ....62107, 62108, 62110, 62111, 62412, 63100, 63101, 64145, 64146
77 65449
91 63364
97 ....64533, 64534
121 63364
125 63364
129 63364
1245 65451
Proposed Rules:
Ch. I 64170
39 ....61822, 61824, 62143, 62802, 63503, 63506, 63508, 63510, 63512, 63827, 63829, 63831, 63834, 63836, 64005, 64008, 64009, 64010, 64171, 64172, 64540, 64542, 64955, 64957, 64960, 64961, 64964, 65227, 65228, 65229, 65471, 65474, 65476, 65478, 65480
91 64966
234 ....65230, 65233
250 65237
253 65233
259 65233
399 65233
Ch. III 64170

15 CFR
734 62768
742 62524
743 62524
744 ....62524, 65394
772 62524
774 ....62524, 62768
Proposed Rules:
922 65483

16 CFR
681 63718

17 CFR
1 63976
3 ....63102, 63976
4 63976
15 63976
166 63976
211 63484
Proposed Rules:
150 65483
232 63513
270 63513

18 CFR
388 63980
Proposed Rules:
141 65246
385 65246

19 CFR
123 63805
Proposed Rules:
4 65487
122 64012

20 CFR
Proposed Rules:
404 62607
405 62607
416 62607
616 62145

21 CFR
510 63986
520 63986
522 62771
558 62570
1306 64921
Proposed Rules:
2 63141
101 62149
606 63416
610 63416
630 63416
640 63416
660 63416
820 63416
1270 63416
1310 65248

22 CFR
51 64930
62 ....61800, 62112

24 CFR
983 65206
3285 62308

25 CFR
Proposed Rules:
502 64545
542 64545
543 64545
546 64545
547 64545

26 CFR
1 ....62771, 63806, 63807, 63813, 64147
31 64939
301 ....62771, 63807
602 63813
Proposed Rules:
1 ....62608, 62805, 63143, 63144, 63523, 63528, 63838, 64174, 64545, 64708
301 62805

27 CFR
24 65452
45 65456
Proposed Rules:
4 ....65256, 65261
9 ....65256, 65261, 65489
70 65261

28 CFR
0 65457

29 CFR
1910 64342
1915 64342
1917 64342
1918 64342
1926 64342
2520 64710
4022 64150
4044 64150
Proposed Rules:
1401 62417
2702 65494

30 CFR
943 64942
Proposed Rules:
49 ....63529, 63540
75 63530
250 63155

31 CFR
2 63104

32 CFR
199 ....63987, 64536
519 64538
701 64538
706 ....62412, 63485

33 CFR
101 63106
105 63106
106 63106
117 ....63107, 63486, 63487, 63488, 64152
165 ....62117, 63488, 65459
Proposed Rules:
100 63839
117 ....63156, 63530, 64175, 64177
165 ....62609, 62613, 65275
167 64968

34 CFR
668 62014
674 ....61960, 62014
676 62014
682 ....61960, 62014
685 ....61960, 62014
690 62014
691 62014

36 CFR
1228 64153
Proposed Rules:
7 65278
1191 61826
1193 61827
1194 61827
1195 61828
1250 64558
1251 64558
1256 64558

37 CFR
202 61801
Proposed Rules:
383 63532

38 CFR
1 65461
2 65461

39 CFR
301 64155
3001 63662
3010 ....63662, 64155
3015 ....63662, 64155
3020 ....63662, 64155

40 CFR
49 63988
52 ....61806, 62119, 62338, 62571, 62579, 62788, 63107, 63990, 64156, 64158, 64946, 64948, 65462

60 ..... 62414, 64860
63 64860
81 ..... 62414, 63990, 64948
82 63490
97 62788
180 ..... 62788, 63992, 63994, 63997, 64538
721 64951
Proposed Rules:
51 ..... 63850, 65282
52 ..... 62175, 62420, 62422, 62615, 62616, 62807, 62809, 63850, 64179, 64970, 65283, 65285, 65494
55 64563
63 63159
82 63535
87 64570
752 65282

42 CFR

411 ..... 62585, 64161
412 62585
413 62585
489 62585
Proposed Rules:
423 64900

44 CFR

64 ..... 63110, 63112
65 62121
67 61806
Proposed Rules:
67 ..... 61828, 61850, 62178, 62184, 62194

45 CFR

Proposed Rules:
2510 64970
2513 64970
2516 64970
2517 64970
2520 64970
2521 64970
2522 64970
2523 64970
2524 64970
2540 64970
2550 64970

47 CFR

11 62123
15 63823
27 63499
64 61813
73 63823
Proposed Rules:
1 64013
2 65494
11 62195
15 64013
20 65494
25 64979
27 64013
61 64179
68 65494
69 64179
73 ..... 63866, 63867, 63868
74 62616
90 ..... 63869, 64013
101 64013

48 CFR

Ch. 1 ..... 63026, 63094
1 ..... 63027, 63089
2 ..... 63040, 63045, 63075
3 63045
4 ..... 63040, 63075, 63076
5 ..... 63075, 63084
6 63084
7 ..... 63027, 63040
11 63040
12 ..... 63040, 63045, 63084
13 ..... 63040, 63075
15 ..... 63045, 63076
17 63076
18 ..... 63027, 63045, 63084
19 63045
22 ..... 63076, 63088
23 63040
25 63089
26 63084
27 63045
28 63027
32 63027
33 ..... 63027, 63045
42 63040
43 63027
45 63040
50 63027
52 ..... 63027, 63040, 63045, 63076, 63084, 63089
53 63089
202 63113
212 63113
225 63113
Proposed Rules:
2 61854
3 64019
4 61854
9 64019
12 61854
14 61854
15 61854
16 61854
19 61854
27 61854
30 61854
31 ..... 61854, 64185
32 61854
42 ..... 61854, 64019
44 61854
49 61854
52 ..... 61854, 64019
604 64980
637 64980
652 64980

49 CFR

385 62795
571 62135
585 62135
1507 63706
1572 63106
Proposed Rules:
571 ..... 62198, 65509
579 62198
594 65532
1114 62200
1121 62200
1150 62200
1180 62200

50 CFR

17 ..... 62736, 63123, 64286
229 ..... 62587, 63824
600 61815
622 62415
648 ..... 62416, 64000, 64952, 65466
660 64952
679 ..... 62590, 63500, 64001
Proposed Rules:
17 62992
21 64981
223 63537
600 64186
635 64186
648 ..... 64023, 64187
679 ..... 63871, 64034, 65539

REMINDERS

The items in this list were editorially compiled as an aid to Federal Register users. Inclusion or exclusion from this list has no legal significance.

RULES GOING INTO EFFECT NOVEMBER 21, 2007

HOUSING AND URBAN DEVELOPMENT DEPARTMENT

Public and Indian housing:
- Housing Choice Voucher Program—
  - Homeownership option; units not yet under construction; eligibility; published 10-22-07

JUSTICE DEPARTMENT

Organization, functions, and authority delegations:
- Civil Trial Sections Chiefs, Federal Claims Section Court, et al.; civil claims compromise and closing; published 11-21-07

NATIONAL AERONAUTICS AND SPACE ADMINISTRATION

Patents and other intellectual property rights:
- Foreign patent licensing regulations removed; published 11-21-07

TRANSPORTATION DEPARTMENT

Federal Aviation Administration

Airspace:
- Colo Void Clause coalition; antenna systems co-location; voluntary best practices; policy statement; published 11-21-07

Airworthiness directives:
- Bombardier; published 10-17-07
- EADS SOCATA; published 10-17-07

TREASURY DEPARTMENT

Alcohol and Tobacco Tax and Trade Bureau

Alcohol, tobacco, and other excise taxes:
- Tobacco products and cigarette papers and tubes; removal without tax payment for U.S. use in law enforcement activities; published 11-21-07

Small Business Job Protection Act; implementation:
- Wine; small domestic producer tax credit transfer and bond computation; published 11-21-07

VETERANS AFFAIRS DEPARTMENT

Organization, functions, and authority delegations:
- Contract Appeals Board; transfer of duties to GSA's Civilian Board of Contract Appeals; published 11-21-07

COMMENTS DUE NEXT WEEK

AGRICULTURE DEPARTMENT

Agricultural Marketing Service

Grapes grown in southeastern California and imported table grapes; comments due by 11-26-07; published 10-25-07 [FR 07-05266]

AGRICULTURE DEPARTMENT

Animal and Plant Health Inspection Service

Plant-related quarantine, foreign:
- Chrysanthemum white rust; comments due by 11-26-07; published 10-26-07 [FR E7-21136]

AGRICULTURE DEPARTMENT

Commodity Credit Corporation

Program regulations:
- Future farm programs; cash and share lease provisions; comments due by 11-27-07; published 9-28-07 [FR 07-04755]

AGRICULTURE DEPARTMENT

Farm Service Agency

Program regulations:
- Future farm programs; cash and share lease provisions; comments due by 11-27-07; published 9-28-07 [FR 07-04755]

COMMERCE DEPARTMENT

National Oceanic and Atmospheric Administration

Fishery conservation and management:
- Caribbean, Gulf, and South Atlantic fisheries—
  - Southern Atlantic states; for-hire fishery control date; comments due by 11-26-07; published 10-26-07 [FR E7-21099]
- Northeastern United States fisheries—
  - Summer flounder, scup, and black sea bass; comments due by 11-30-07; published 12-30-99 [FR E7-22052]

ENVIRONMENTAL PROTECTION AGENCY

Air pollutants, hazardous; national emission standards:
- Hazardous waste combustors; comments due by 11-27-07; published 10-18-07 [FR E7-20596]

Air programs; approval and promulgation; State plans for designated facilities and pollutants:
- Nevada; comments due by 11-30-07; published 10-31-07 [FR E7-21449]

Air quality implementation plans; approval and promulgation; various States:
- California; comments due by 11-30-07; published 10-31-07 [FR E7-21318]
- Kentucky; comments due by 11-28-07; published 10-29-07 [FR E7-21245]
- Michigan; comments due by 11-26-07; published 10-26-07 [FR E7-20948]
- North Carolina; comments due by 11-30-07; published 10-31-07 [FR E7-21235]

Air quality planning purposes; designation of areas:
- Louisiana; comments due by 11-29-07; published 10-30-07 [FR E7-21314]
- Texas; comments due by 11-29-07; published 10-30-07 [FR E7-21313]

Pesticides; tolerances in food, animal feeds, and raw agricultural commodities:
- Florasulam; comments due by 11-27-07; published 9-28-07 [FR E7-19219]
- Quinclorac; comments due by 11-27-07; published 9-28-07 [FR E7-19227]
- Sulfosulfuron; comments due by 11-26-07; published 9-26-07 [FR E7-18864]
- Tembotrione, et al.; comments due by 11-27-07; published 9-28-07 [FR E7-19230]

FEDERAL COMMUNICATIONS COMMISSION

Radio stations; table of assignments:
- Oregon; comments due by 11-26-07; published 10-22-07 [FR E7-20747]

Radio stations; table of assignments:
- Oklahoma; comments due by 11-26-07; published 10-22-07 [FR E7-20732]
- Texas; comments due by 11-26-07; published 10-22-07 [FR E7-20754]

FEDERAL ELECTION COMMISSION

Reports by political committees:
- Bundled contributions; information disclosure by lobbyists and registrants; comments due by 11-30-07; published 11-6-07 [FR E7-21711]

HEALTH AND HUMAN SERVICES DEPARTMENT

Centers for Disease Control and Prevention

Quarantine, inspection, and licensing:
- Dogs and cats importation regulations extended to cover domesticated ferrets; comments due by 12-1-07; published 10-1-07 [FR 07-04852]

HEALTH AND HUMAN SERVICES DEPARTMENT

Centers for Medicare & Medicaid Services

Medicare:
- Part B special enrollment period and Part A premium changes; comments due by 11-27-07; published 9-28-07 [FR E7-18467]

HEALTH AND HUMAN SERVICES DEPARTMENT

Food and Drug Administration

Sunscreen drug products for over-the-counter human use; proposed amendment of final monograph; comments due by 11-26-07; published 8-27-07 [FR 07-04131]

HOMELAND SECURITY DEPARTMENT

Coast Guard

Drawbridge operations:
- New Jersey; comments due by 11-26-07; published 10-11-07 [FR E7-19949]

INTERIOR DEPARTMENT

Native American Graves Protection and Repatriation Review Act; implementation:
- Unclaimed human remains, funerary objects, sacred objects, or objects of cultural patrimony; disposition; consultation and dialogue; comments due by 12-1-07; published 8-13-07 [FR E7-15823]

JUSTICE DEPARTMENT

Drug Enforcement Administration

Combat Methamphetamine Epidemic Act of 2005:

Scheduled listed chemical products; self-certification fee for regulated sellers; comments due by 11-30-07; published 10-1-07 [FR E7-19215]

LIBRARY OF CONGRESS

Copyright Royalty Board, Library of Congress

Copyright royalty funds:

Preexisting subscription and satellite digital audio radio services; rates and terms adjustment; comments due by 11-30-07; published 10-31-07 [FR E7-21473]

MINE SAFETY AND HEALTH FEDERAL REVIEW COMMISSION

Federal Mine Safety and Health Review Commission

Freedom of Information Act; implementation; comment extension; comments due by 11-30-07; published 11-21-07 [FR E7-22792]

NUCLEAR REGULATORY COMMISSION

Spent nuclear fuel and high-level radioactive waste; independent storage; licensing requirements:

Approved spent fuel storage casks; list; comments due by 11-26-07; published 10-25-07 [FR E7-21016]

SECURITIES AND EXCHANGE COMMISSION

Securities and investment advisers:

Principal trades with certain advisory clients; temporary rule; comments due by 11-30-07; published 9-28-07 [FR E7-19191]

SMALL BUSINESS ADMINISTRATION

Small business size regulations:

Fuel oil dealers industries; comments due by 11-30-07; published 10-31-07 [FR E7-21401]

TRANSPORTATION DEPARTMENT

Federal Aviation Administration

Aeronautical land-use assurance; waivers:

Klamath Falls Airport, OR; comments due by 11-28-07; published 10-29-07 [FR 07-05321]

Seattle Tacoma International Airport, WA; comments due by 11-28-07; published 10-29-07 [FR 07-05323]

Agency information collection activities; proposals, submissions, and approvals; comments due by 11-28-07; published 10-29-07 [FR 07-05318]

Airworthiness directives:

Boeing; comments due by 11-26-07; published 10-11-07 [FR E7-20048]

Bombardier; comments due by 11-29-07; published 10-30-07 [FR E7-21178]

Empresa Brasileira de Aeronautica S.A. (EMBRAER); comments due by 11-26-07; published 10-25-07 [FR E7-21002]

McCauley Propeller Systems; comments due by 11-27-07; published 9-28-07 [FR E7-19194]

McDonnell Douglas; comments due by 11-26-07; published 10-11-07 [FR E7-20049]

PILATUS AIRCRAFT LTD; comments due by 11-30-07; published 10-31-07 [FR E7-21421]

Reims Aviation S.A.; comments due by 11-30-07; published 10-31-07 [FR E7-21400]

Airworthiness standards:

Special conditions—

Boeing Model 767 series airplanes; comments due by 11-28-07; published 10-29-07 [FR E7-21240]

Boeing Model 787 series airplanes; comments due by 11-28-07; published 10-29-07 [FR E7-21243]

Class D and E airspace; comments due by 11-30-07; published 10-16-07 [FR E7-20313]

Class E airspace; comments due by 11-28-07; published 10-30-07 [FR 07-05324]

TREASURY DEPARTMENT

Comptroller of the Currency

Agency information collection activities; proposals, submissions, and approvals; comments due by 11-26-07; published 10-26-07 [FR 07-05296]

TREASURY DEPARTMENT

Internal Revenue Service

Income taxes:

Benefit restrictions; underfunded pension plans; comments due by 11-29-07; published 8-31-07 [FR 07-04262]

Correction; comments due by 11-29-07; published 11-16-07 [FR C7-04262]

Tentative carryback adjustment computation and allowance; section 6411 clarification; cross-reference; comments due by 11-26-07; published 8-27-07 [FR E7-16876]

Procedure and administration:

Actuarial services, enrollment; user fees; comments due by 11-30-07; published 10-31-07 [FR 07-05428]

VETERANS AFFAIRS DEPARTMENT

Compensation, pension, burial, and related benefits:

Veterans, surviving spouses, and surviving children; improved pension regulations; comments due by 11-26-07; published 9-26-07 [FR E7-18745]

LIST OF PUBLIC LAWS

This is a continuing list of public bills from the current session of Congress which have become Federal laws. It may be used in conjunction with "P L U S" (Public Laws Update Service) on 202–741–6043. This list is also available online at *http://www.archives.gov/federal-register/laws.html*.

The text of laws is not published in the **Federal Register** but may be ordered in "slip law" (individual pamphlet) form from the Superintendent of Documents, U.S. Government Printing Office, Washington, DC 20402 (phone, 202–512–1808). The text will also be made available on the Internet from GPO Access at *http://www.gpoaccess.gov/plaws/index.html*. Some laws may not yet be available.

H.R. 2602/P.L. 110–118

To name the Department of Veterans Affairs medical facility in Iron Mountain, Michigan, as the "Oscar G. Johnson Department of Veterans Affairs Medical Facility". (Nov. 16, 2007; 121 Stat. 1346)

S.J. Res. 7/P.L. 110–119

Providing for the reappointment of Roger W. Sant as a citizen regent of the Board of Regents of the Smithsonian Institution. (Nov. 16, 2007; 121 Stat. 1347)

S. 2206/P.L. 110–120

To provide technical corrections to Public Law 109-116 (2 U.S.C. 2131a note) to extend the time period for the Joint Committee on the Library to enter into an agreement to obtain a statue of Rosa Parks, and for other purposes. (Nov. 19, 2007; 121 Stat. 1348)

Last List November 19, 2007

Public Laws Electronic Notification Service (PENS)

PENS is a free electronic mail notification service of newly enacted public laws. To subscribe, go to *http://listserv.gsa.gov/archives/publaws-l.html*

Note: This service is strictly for E-mail notification of new laws. The text of laws is not available through this service. **PENS** cannot respond to specific inquiries sent to this address.