AUTHENTICATED
U.S. GOVERNMENT
INFORMATION
GPO

Federal Register

3–25–08 Tuesday
Vol. 73 No. 58 Mar. 25, 2008

Pages 15633–15860

The **FEDERAL REGISTER** (ISSN 0097–6326) is published daily, Monday through Friday, except official holidays, by the Office of the Federal Register, National Archives and Records Administration, Washington, DC 20408, under the Federal Register Act (44 U.S.C. Ch. 15) and the regulations of the Administrative Committee of the Federal Register (1 CFR Ch. I). The Superintendent of Documents, U.S. Government Printing Office, Washington, DC 20402 is the exclusive distributor of the official edition. Periodicals postage is paid at Washington, DC.

The **FEDERAL REGISTER** provides a uniform system for making available to the public regulations and legal notices issued by Federal agencies. These include Presidential proclamations and Executive Orders, Federal agency documents having general applicability and legal effect, documents required to be published by act of Congress, and other Federal agency documents of public interest.

Documents are on file for public inspection in the Office of the Federal Register the day before they are published, unless the issuing agency requests earlier filing. For a list of documents currently on file for public inspection, see *www.archives.gov.*

The seal of the National Archives and Records Administration authenticates the Federal Register as the official serial publication established under the Federal Register Act. Under 44 U.S.C. 1507, the contents of the **Federal Register** shall be judicially noticed.

The **Federal Register** is published in paper and on 24x microfiche. It is also available online at no charge as one of the databases on GPO Access, a service of the U.S. Government Printing Office.

The online edition of the **Federal Register** *www.gpoaccess.gov/nara,* available through GPO Access, is issued under the authority of the Administrative Committee of the Federal Register as the official legal equivalent of the paper and microfiche editions (44 U.S.C. 4101 and 1 CFR 5.10). It is updated by 6 a.m. each day the **Federal Register** is published and includes both text and graphics from Volume 59, Number 1 (January 2, 1994) forward.

For more information about GPO Access, contact the GPO Access User Support Team, call toll free 1-888-293-6498; DC area 202-512-1530; fax at 202-512-1262; or via e-mail at *gpoaccess@gpo.gov.* The Support Team is available between 7:00 a.m. and 9:00 p.m. Eastern Time, Monday–Friday, except official holidays.

The annual subscription price for the **Federal Register** paper edition is $749 plus postage, or $808, plus postage, for a combined **Federal Register, Federal Register** Index and List of CFR Sections Affected (LSA) subscription; the microfiche edition of the **Federal Register** including the **Federal Register** Index and LSA is $165, plus postage. Six month subscriptions are available for one-half the annual rate. The prevailing postal rates will be applied to orders according to the delivery method requested. The price of a single copy of the daily **Federal Register,** including postage, is based on the number of pages: $11 for an issue containing less than 200 pages; $22 for an issue containing 200 to 400 pages; and $33 for an issue containing more than 400 pages. Single issues of the microfiche edition may be purchased for $3 per copy, including postage. Remit check or money order, made payable to the Superintendent of Documents, or charge to your GPO Deposit Account, VISA, MasterCard, American Express, or Discover. Mail to: U.S. Government Printing Office—New Orders, P.O. Box 979050, St. Louis, MO 63197-9000; or call toll free 1-866-512-1800, DC area 202-512-1800; or go to the U.S. Government Online Bookstore site, see *bookstore.gpo.gov.*

There are no restrictions on the republication of material appearing in the **Federal Register.**

How To Cite This Publication: Use the volume number and the page number. Example: 73 FR 12345.

Postmaster: Send address changes to the Superintendent of Documents, Federal Register, U.S. Government Printing Office, Washington, DC 20402, along with the entire mailing label from the last issue received.

SUBSCRIPTIONS AND COPIES

PUBLIC

Subscriptions:

Paper or fiche	**202–512–1800**
Assistance with public subscriptions	**202–512–1806**
General online information	**202–512–1530; 1–888–293–6498**

Single copies/back copies:

Paper or fiche	**202–512–1800**
Assistance with public single copies	**1–866–512–1800 (Toll-Free)**

FEDERAL AGENCIES

Subscriptions:

Paper or fiche	**202–741–6005**
Assistance with Federal agency subscriptions	**202–741–6005**

FEDERAL REGISTER WORKSHOP

THE FEDERAL REGISTER: WHAT IT IS AND HOW TO USE IT

FOR: Any person who uses the Federal Register and Code of Federal Regulations.

WHO: Sponsored by the Office of the Federal Register.

WHAT: Free public briefings (approximately 3 hours) to present:

1. The regulatory process, with a focus on the Federal Register system and the public's role in the development of regulations.

2. The relationship between the Federal Register and Code of Federal Regulations.

3. The important elements of typical Federal Register documents.

4. An introduction to the finding aids of the FR/CFR system.

WHY: To provide the public with access to information necessary to research Federal agency regulations which directly affect them. There will be no discussion of specific agency regulations.

WHEN: Tuesday, April 15, 2008
9:00 a.m.–Noon

WHERE: Office of the Federal Register
Conference Room, Suite 700
800 North Capitol Street, NW.
Washington, DC 20002

RESERVATIONS: (202) 741–6008

Printed on recycled paper.

Contents

Federal Register

Vol. 73, No. 58

Tuesday, March 25, 2008

Agriculture Department
See Commodity Credit Corporation
See Farm Service Agency
See Forest Service
NOTICES
Agency Information Collection Activities; Proposals, Submissions, and Approvals, 15718–15719

Children and Families Administration
NOTICES
Agency Information Collection Activities; Proposals, Submissions, and Approvals, 15758–15759

Commerce Department
See Economic Development Administration
See International Trade Administration
See National Institute of Standards and Technology
See National Oceanic and Atmospheric Administration

Commodity Credit Corporation
NOTICES
Agency Information Collection Activities; Proposals, Submissions, and Approvals, 15719–15720

Consumer Product Safety Commission
RULES
Standard for the Flammability of Clothing Textiles, 15636–15661

Copyright Royalty Board, Library of Congress
NOTICES
Notice of Intent to Audit, 15778

Defense Department
NOTICES
Agency Information Collection Activities; Proposals, Submissions, and Approvals, 15743

Economic Development Administration
NOTICES
Petitions by Firms for Determination of Eligibility to Apply for Trade Adjustment Assistance, 15721–15722

Education Department
NOTICES
Extending Deadline Date for Transmittal of Part II Applications and Deadline Date for Intergovernmental Review, etc., 15743–15744
Technical Assistance and Dissemination To Improve Services and Results for Children With Disabilities, etc., 15744–15750

Employee Benefits Security Administration
PROPOSED RULES
Model Notice of Multiemployer Plan in Critical Status, 15688–15694

Energy Department
See Federal Energy Regulatory Commission
NOTICES
Agency Information Collection Activities; Proposals, Submissions, and Approvals, 15750–15751
Meetings:
Environmental Management Site-Specific Advisory Board, Oak Ridge Reservation, 15751

Environmental Protection Agency
RULES
Determinations of Attainment of the Eight-Hour Ozone Standard for Various Ozone Nonattainment Areas in Upstate New York State, 15672–15674
NOTICES
Agency Information Collection Activities; Proposals, Submissions, and Approvals, 15752–15754

Equal Employment Opportunity Commission
NOTICES
Agency Information Collection Activities; Proposals, Submissions, and Approvals, 15754–15755

Executive Office of the President
See Presidential Documents
See Science and Technology Policy Office

Farm Service Agency
NOTICES
Agency Information Collection Activities; Proposals, Submissions, and Approvals, 15719–15721

Federal Aviation Administration
PROPOSED RULES
Airworthiness Directives:
Airbus Model A318, A319, A320, and A321 Series Airplanes, 15681–15682
Bombardier Model DHC 8 400 Series Airplanes, 15682–15685
Hawker Beechcraft Corporation Model 390 Airplanes, 15678–15681
Proposed Establishment of Colored and VOR Federal Airways; Alaska, 15685–15687

Federal Energy Regulatory Commission
NOTICES
Surrender of Preliminary Permit:
Alaska Tidal Energy Co., 15751
Midwest Hydraulic, Inc., 15751
Oregon Tidal Energy Co., 15751–15752

Federal Highway Administration
RULES
Indian Reservation Road Bridge Program, 15661–15668

Federal Procurement Policy Office
NOTICES
Determination of Executive Compensation Benchmark Amount, 15779

Federal Railroad Administration
NOTICES
Petition for Waiver of Compliance:
Riverport Railroad, LLC, 15833–15834

Federal Reserve System
NOTICES
Change in Bank Control Notices; Acquisition of Shares of Bank or Bank Holding Companies, 15756
Formations of, Acquisitions by, and Mergers of Bank Holding Companies, 15756
Meetings; Sunshine Act, 15756
Proposals to Engage in Permissible Nonbanking Activities: Acquire Companies that are Engaged in Permissible Nonbanking Activities, 15756–15757

Fish and Wildlife Service
NOTICES
Draft Comprehensive Conservation Plan and Environmental Assessment:
Wapack National Wildlife Refuge, Hillsborough County, NH, 15769–15770

Food and Drug Administration
RULES
New Animal Drugs for Use in Animal Feed; Pyrantel; Technical Amendment, 15661
NOTICES
Global Harmonization Task Force, Study Group 4; Final Document; Availability, 15759–15760

Forest Service
PROPOSED RULES
Locatable Minerals Operations Conducted on National Forest Systems Lands, 15694–15716
NOTICES
Meetings:
Ravalli County Resource Advisory Committee, 15721

General Services Administration
NOTICES
Agency Information Collection Activities; Proposals, Submissions, and Approvals, 15743

Health and Human Services Department
See Children and Families Administration
See Food and Drug Administration
See National Institutes of Health
NOTICES
Interagency Coordinating Committee on the Validation of Alternative Methods, 15757–15758
Meetings:
American Health Information Community Confidentiality, Privacy, & Security Workgroup, 15758

Homeland Security Department
See U.S. Customs and Border Protection
RULES
Classification of Aliens as Children of United States Citizens Based on Intercountry Adoptions Under the Hague Convention:
Reopening and Extension of Comment Period, 15635–15636

Indian Affairs Bureau
NOTICES
Land Acquisitions:
Puyallup Tribe, Washington, 15770–15771

Interior Department
See Fish and Wildlife Service
See Indian Affairs Bureau
See Land Management Bureau
See Minerals Management Service

Internal Revenue Service
RULES
Abandonment of Stock or Other Securities; Correction, 15668
Disclosure of Return Information in Connection with Written Contracts Among the IRS Whistleblowers, etc., 15668–15671
PROPOSED RULES
Disclosure of Return Information in Connection with Written Contracts Among the IRS, Whistleblowers, etc., 15687–15688
NOTICES
Agency Information Collection Activities; Proposals, Submissions, and Approvals, 15837–15841
Low Income Taxpayer Clinic Grant Program; Availability of 2008 Supplemental Grant Application Period, 15841–15842

International Trade Administration
NOTICES
Aerospace, Defense and Security Trade Mission to Athens, Greece, 15722–15724
Extension of Time Limit for Preliminary Results of Countervailing Duty Administrative Review:
Certain Pasta from Italy, 15725
Polyethylene Retail Carrier Bags from Thailand, 15724
Extension of Time Limits for the Preliminary Results of the New Shipper Reviews:
Frozen Fish Fillets from the Socialist Republic of Vietnam, 15725
Medical Equipment Trade Mission to the Philippines, Thailand, and Malaysia, 15725–15726
Preliminary Determination of Sales at Less Than Fair Value:
Steel Wire Garment Hangers from the Peoples Republic of China, 15726–15735
Rescission of Antidumping Duty New Shipper Review:
Stainless Steel Bar from Germany, 15736–15737
U.S. Health Care Trade Policy Mission to China, 15737–15738

International Trade Commission
NOTICES
Investigation:
Certain Short Wavelength Light Emitting Diodes, 15775–15776
Sodium Metal From France, 15777

Judicial Conference of the United States
NOTICES
Meetings:
Advisory Committee on Rules of Bankruptcy Procedure, 15777
Advisory Committee on Rules of Criminal Procedure, 15777
Committee on Rules of Practice and Procedure, 15777–15778

Labor Department
See Employee Benefits Security Administration
See Occupational Safety and Health Administration

Land Management Bureau
NOTICES
Filing of Plats of Survey:
Wyoming, 15771–15772
Meetings:
Northeast California Resource Advisory Council, 15772

Public Land Order:
Alaska, 15772–15773
Minnesota, 15773
Montana, 15773–15774
Wisconsin, 15774

Library of Congress
See Copyright Royalty Board, Library of Congress

Management and Budget Office
See Federal Procurement Policy Office

Minerals Management Service
NOTICES
Gulf of Mexico, Outer Continental Shelf, Central Planning Area, Oil and Gas Lease Sale 207 (2008) Environmental Assessment, 15774–15775
Outer Continental Shelf (OCS) Oil and Gas Lease Sale 207 in the Western Planning Area (WPA) in the Gulf of Mexico; Availability of the Proposed Notice of Sa, 15775

National Aeronautics and Space Administration
NOTICES
Agency Information Collection Activities; Proposals, Submissions, and Approvals, 15743

National Highway Traffic Safety Administration
NOTICES
Decision that Certain Nonconforming Motor Vehicles are Eligible for Importation, 15834–15835
Receipt of Petition for Decision of Inconsequential Noncompliance:
Hyundai Motor Co., 15835–15837

National Institute of Standards and Technology
NOTICES
Inventions Available for Licensing, 15738

National Institutes of Health
NOTICES
Meetings:
National Institute of Child Health and Human Development, 15760–15761

National Oceanic and Atmospheric Administration
RULES
Fisheries of the Caribbean, Gulf of Mexico, and South Atlantic
Coastal Migratory Pelagic Resources of the Gulf of Mexico and South Atlantic; Trip Limit Reduction, 15676–15677
Reef Fish Fishery of the Gulf of Mexico; Closure of the 2008 Gulf of Mexico Recreational Fishery for Red Snapper, 15674–15676
Fisheries of the Exclusive Economic Zone Off Alaska;
Pacific Cod by Catcher Vessels Less Than 60 ft (18.3 m) LOA Using Pot or Hook-and-Line Gear in the Bering Sea and Aleutian Islands Management Area, 15677
PROPOSED RULES
Fisheries of the Northeastern United States:
Atlantic Mackerel, Squid, and Butterfish Fisheries; Amendment 9, 15716–15717
NOTICES
Application for Exempted Fishing Permit, 15738–15741
Endangered Species; Application for Modification, 15741
Incidental Take of Marine Mammals:
Taking of Marine Mammals Incidental to Conducting Precision Strike Weapons Testing and Training by Eglin Air Force Base in the Gulf of Mexico, 15742–15743

Nuclear Regulatory Commission
NOTICES
Agency Information Collection Activities; Proposals, Submissions, and Approvals, 15779
Biweekly Notice; Applications and Amendments to Facility Operating Licenses Involving no Significant Hazards Considerations, 15780–15796
GALE86 Code for Calculation of Routine Radioactive Releases in Gaseous and Liquid Effluents to Support Design Certification, etc., 15796
Meetings:
Advisory Committee on Nuclear Waste and Materials, 15796–15797
Meetings; Sunshine Act, 15797–15798

Occupational Safety and Health Administration
NOTICES
Agency Information Collection Activities; Proposals, Submissions, and Approvals, 15778

Personnel Management Office
NOTICES
Agency Information Collection Activities; Proposals, Submissions, and Approvals, 15798

Presidential Documents
PROCLAMATIONS
Special observances:
Greek Independence Day: A National Day of Celebration of Greek and American Democracy (Proc. 8227), 15633–15634

Science and Technology Policy Office
NOTICES
Meetings:
President's Council of Advisors on Science and Technology, 15755–15756

Securities and Exchange Commission
NOTICES
Agency Information Collection Activities; Proposals, Submissions, and Approvals, 15798–15799
Application:
American Family Life Insurance Company, et al., 15799–15805
Self-Regulatory Organizations:
Chicago Board Options Exchange, 15805–15807
Self-Regulatory Organizations; Proposed Rule Changes:
American Stock Exchange LLC, 15807–15814
Chicago Board Options Exchange, Inc., 15814–15815
Financial Industry Regulatory Authority, Inc., 15815–15818
New York Stock Exchange, Inc., 15819–15821
NYSE Arca, Inc., 15821–15824
Options Clearing Corp., 15824–15826
Philadelphia Stock Exchange, Inc., 15826–15828

Small Business Administration
NOTICES
Interest Rates, 15828

Social Security Administration
NOTICES
Privacy Act; Systems of Records, 15828–15832

State Department
NOTICES
Agency Information Collection Activities; Proposals, Submissions, and Approvals, 15832–15833
Culturally Significant Objects Imported for Exhibition Determinations:
Classically Greek Coins and Bank Notes from Antiquity to Today, 15833

Transportation Department
See Federal Aviation Administration
See Federal Highway Administration
See Federal Railroad Administration
See National Highway Traffic Safety Administration

Treasury Department
See Internal Revenue Service
RULES
Privacy Act; Implementation, 15671–15672
NOTICES
Agency Information Collection Activities; Proposals, Submissions, and Approvals, 15837

U.S. Customs and Border Protection
NOTICES
Agency Information Collection Activities; Proposals, Submissions, and Approvals, 15761–15769

Veterans Affairs Department
NOTICES
Agency Information Collection Activities; Proposals, Submissions, and Approvals, 15842–15847
Privacy Act; Systems of Records, 15847–15859

Reader Aids

Consult the Reader Aids section at the end of this issue for phone numbers, online resources, finding aids, reminders, and notice of recently enacted public laws.

To subscribe to the Federal Register Table of Contents LISTSERV electronic mailing list, go to http://listserv.access.gpo.gov and select Online mailing list archives, FEDREGTOC-L, Join or leave the list (or change settings); then follow the instructions.

CFR PARTS AFFECTED IN THIS ISSUE

A cumulative list of the parts affected this month can be found in the Reader Aids section at the end of this issue.

3 CFR

Proclamations:

8227 15633

8 CFR

103 15635
204 15635
213a 15635
299 15635
322 15635

14 CFR

Proposed Rules:

39 (3 documents) 15678, 15681, 15682
71 15685

16 CFR

1610 15636

21 CFR

558 15661

23 CFR

661 15661

26 CFR

1 15668
301 15668

Proposed Rules:

301 15687

29 CFR

Proposed Rules:

2540 15688

31 CFR

1 15671

36 CFR

Proposed Rules:

223 15694
228 15694
261 15694
292 15694
293 15694

40 CFR

52 15672

50 CFR

622 (2 documents) 15674, 15676
679 15677

Proposed Rules:

648 15716

Federal Register
Vol. 73, No. 58
Tuesday, March 25, 2008

Presidential Documents

Title 3—

The President

Proclamation 8227 of March 20, 2008

Greek Independence Day: A National Day of Celebration of Greek and American Democracy, 2008

By the President of the United States of America

A Proclamation

On Greek Independence Day, we recognize the important contributions Greek Americans have made to our national character, celebrate the deep friendship between our two countries, and honor the anniversary of the Greek call for independence.

The United States and Greece share a close relationship based on our common belief in the power of freedom. The ancient Athenians gave birth to the principles of democracy, and America's Founding Fathers were inspired by Greek ideals that honored and respected human dignity and rights. When the people of Greece claimed their independence in 1821, they had the strong support of the United States. Greek patriots risked their lives because they knew freedom and democracy were both their proud legacy and their ultimate destiny. Today, our nations remain allies in the cause of freedom and are working to lay the foundations of peace and spread the blessings of liberty around the world.

In celebrating Greek Independence Day, we commemorate the heritage of freedom our countries hold dear, and we remember the Greek Americans whose strong spirit, resolve, and courage helped shape America.

NOW, THEREFORE, I, GEORGE W. BUSH, President of the United States of America, by virtue of the authority vested in me by the Constitution and laws of the United States, do hereby proclaim March 25, 2008, as Greek Independence Day: A National Day of Celebration of Greek and American Democracy. I call upon all Americans to observe this day with appropriate ceremonies and activities.

IN WITNESS WHEREOF, I have hereunto set my hand this twentieth day of March, in the year of our Lord two thousand eight, and of the Independence of the United States of America the two hundred and thirty-second.

[FR Doc. 08–1075
Filed 3–24–08; 8:45 am]
Billing code 3195–01–P

Rules and Regulations

Federal Register
Vol. 73, No. 58
Tuesday, March 25, 2008

This section of the FEDERAL REGISTER contains regulatory documents having general applicability and legal effect, most of which are keyed to and codified in the Code of Federal Regulations, which is published under 50 titles pursuant to 44 U.S.C. 1510.

The Code of Federal Regulations is sold by the Superintendent of Documents. Prices of new books are listed in the first FEDERAL REGISTER issue of each week.

DEPARTMENT OF HOMELAND SECURITY

8 CFR Parts 103, 204, 213a, 299, and 322

[CIS No. 2098–00; DHS Docket No. USCIS–2007–0008]

RIN 1615–AA43

Classification of Aliens as Children of United States Citizens Based on Intercountry Adoptions Under the Hague Convention; Re-Opening and Extension of the Comment Period

AGENCY: U.S. Citizenship and Immigration Services, DHS.

ACTION: Interim rule; re-opening and extension of the comment period.

SUMMARY: On October 4, 2007, The Department of Homeland Security (DHS) published an interim rule in the **Federal Register** at 72 FR 56832, establishing rules necessary for the ratification and implementation of the Convention on Protection of Children and Co-operation in Respect of Intercountry Adoption, signed at The Hague on May 29, 1993 (''Convention''). The comment period ended December 3, 2007. Of the 54 comments received by DHS, most requested an extension of the comment period to allow sufficient time to provide meaningful and substantive comments. DHS is re-opening and extending the comment period for 60 days until May 27, 2008.

DATES: Written comments must be submitted on or before May 27, 2008. Comments received beyond this date will not be considered.

ADDRESSES: You may submit comments to DHS, identified by DHS Docket No. USCIS–2007–0008, by any of the following methods:

- Federal eRulemaking Portal: *http://www.regulations.gov*. Follow the instructions for submitting comments.
- Mail: Chief, Regulatory Management Division, U.S. Citizenship and Immigration Services, Department of Homeland Security, 111 Massachusetts Avenue, NW., Suite 3008, Washington, DC 20529. To ensure proper handling, please reference DHS Docket No. USCIS–2007–0008 on your correspondence. This mailing address may also be used for paper, disk, or CD–ROM submissions.
- Hand Delivery/Courier: Regulatory Management Division, U.S. Citizenship and Immigration Services, Department of Homeland Security, 111 Massachusetts Avenue, NW., Suite 3008, Washington, DC 20529. Contact Telephone Number (202) 272–8377.

FOR FURTHER INFORMATION CONTACT: Michael Valverde, Chief, Children's Issues, U.S. Citizenship and Immigration Services, Department of Homeland Security, 20 Massachusetts Avenue, NW., Suite 3300, Washington, DC 20529, telephone (202) 272–9176.

SUPPLEMENTARY INFORMATION:

Interim Rule

On October 4, 2007, the DHS published in the **Federal Register** at 72 FR 56832 an interim rule entitled ''Classification of Aliens as Children of United States Citizens Based on Intercountry Adoptions Under the Hague Convention.'' The interim rule established the Department of Homeland Security rules necessary for the ratification and implementation of the Convention on Protection of Children and Co-operation in Respect of Intercountry Adoption, signed at The Hague on May 29, 1993 (''Convention''). The interim rule entered into force on November 5, 2007, although actual implementation of the interim rule will not occur until the Convention enters into force for the United States. The comment period for the interim rule ended December 3, 2007.

Implementation

On November 16, 2007, the President signed the instrument of ratification for the Convention. The Department of State deposited the instrument of ratification with the Ministry of Foreign Affairs of the Kingdom of the Netherlands on December 12, 2007. On December 18, 2007, the Department of State published in the **Federal Register** at 72 FR 71730 a written notice that the Convention will enter into force for the United States on April 1, 2008. Accordingly, the DHS interim rule published on October 4, 2007, will also enter into force April 1, 2008. 8 CFR 204.300(a).

Comments

As of December 3, 2007, 54 comments had been received on the interim rule. Most of the comments did not address any issue raised by the interim rule. Rather, these comments requested an extension of the comment period. These commenters contend that the 60-day comment period did not provide sufficient time for them to submit substantive comments. Many of these commenters requested additional time to comment.

As a legal matter, the 60-day comment period provided for by the interim rule is sufficient. The Administrative Procedure Act, 5 U.S.C. 553, generally contemplates a 30-day comment period. Section 6(a)(1) of Executive Order 12866, Regulatory Planning and Review, as amended by Executive Order 13422, 72 FR 2763, references a 60-day benchmark for establishing an appropriate comment period. Nevertheless, DHS has determined as a matter of policy that the importance of the implementation of the Convention makes it reasonable for DHS to agree to the request for an additional comment period. DHS has also determined that it is possible to re-open the comment period without delaying implementation of the interim rule. Accordingly, DHS has decided to re-open and extend the comment period.

All comments received by May 27, 2008 will be considered by DHS in preparing the final rule. Note that this extension of the comment period does not delay the implementation of the interim rule. The interim rule itself entered into force on November 5, 2007. Implementation will still begin on April 1, 2008, when the Convention enters into force for the United States. 8 CFR 204.300(a). Prospective adoptive parents seeking to adopt children habitually resident in a Convention country may begin a Convention adoption case by filing Form I–800A, Application for Determination of Suitability to Adopt a Child from a Convention Country, on April 1, 2008.

View the Interim Rule

To view the interim rule published on October 4, 2007, see the url listed

below: *http://a257.g.akamaitech.net/7/257/2422/01jan20071800/edocket.access.gpo.gov/2007/E7-18992.htm*.

Dated: March 18, 2008.

Emilio T. Gonzalez,

Director, U.S. Citizenship and Immigration Services.

[FR Doc. 08–1069 Filed 3–21–08; 8:45 am]

BILLING CODE 4410–10–P

CONSUMER PRODUCT SAFETY COMMISSION

16 CFR Part 1610

Standard for the Flammability of Clothing Textiles

AGENCY: Consumer Product Safety Commission.

ACTION: Final rule.

SUMMARY: The Commission is amending its flammability standard for general wearing apparel, the Standard for the Flammability of Clothing Textiles, 16 CFR part 1610. The Standard, originally issued in 1953, has become outdated in several respects. The revisions better reflect current consumer practices and technologies and clarify several aspects of the Standard.

DATES: The rule is effective September 22, 2008. The incorporation by reference of the publication listed in this rule is approved by the Director of the Federal Register as of September 22, 2008.

FOR FURTHER INFORMATION CONTACT: Mary Toro, Directorate for Compliance and Field Operations, Consumer Product Safety Commission, 4330 East West Highway, Bethesda, Maryland 20814–4408; telephone (301) 504–7586; e-mail *mtoro@cpsc.gov.*

SUPPLEMENTARY INFORMATION:

A. Background

1. History of the Standard

The Standard for the Flammability of Clothing Textiles, 16 CFR part 1610 (''the Standard'') dates back to the 1950s. Congress enacted the Flammable Fabrics Act (''FFA'') in 1953 (Pub. L. 83–88, 67 Stat. 111). It specified a test, a voluntary commercial standard then called ''Flammability of Clothing Textiles, Commercial Standard ('CS') 191–53,'' to be used to determine if fabric or clothing is ''so highly flammable as to be dangerous when worn by individuals.''

When Congress established the Consumer Product Safety Commission in 1972, it transferred to the Commission the authority the Secretary of Commerce had to issue and amend flammability standards under the FFA. 15 U.S.C. 2079(b). In 1975, the Commission published the FFA of 1953 at 16 CFR 1609 and codified the Standard for the Flammability of Clothing Textiles at 16 CFR 1610.

2. The Standard

The Commission's revisions to the Standard will update and clarify it. The Standard describes a test apparatus and the procedures for testing clothing and textiles intended to be used for clothing. It establishes three classes of flammability. The classes are based on measurement of burn time, along with visual observations of flame intensity. The classes are: Class 1 or normal flammability; Class 2 or intermediate flammability; and Class 3 or rapid and intense burning. Clothing and textiles that are categorized as Class 3 under the prescribed test method are considered dangerously flammable. 16 CFR 1610.4.

The Standard prescribes the method of testing to determine the appropriate classification. Five specimens are subjected to a flammability tester. This is a draft-proof ventilated chamber containing an ignition medium, a sample rack and an automatic timing device. A swatch of each sample must be subjected to the dry cleaning and hand washing procedure prescribed by the Standard. To determine results, the average time of flame spread is taken for five specimens. However, if the time of flame spread is less than 4 seconds (3½ seconds for plain-surfaced fabrics), five additional specimens must be tested and the average time of flame spread for these ten specimens, or for as many of them as burn, must be taken. Classification is based on the reported results before and after dry cleaning and washing, whichever is lower.

3. The Products

The products regulated under the Standard are clothing and fabrics intended to be used for clothing. The Standard applies to all items of clothing, and fabrics used for such clothing, whether for adults or children, for daywear or nightwear. The Commission has other regulations governing the flammability of children's sleepwear, 16 CFR parts 1615 and 1616, that are more stringent than the general wearing apparel flammability standard. The revisions discussed in this notice would not affect the children's sleepwear standards.

4. The Risk of Injury

Fatalities where clothing was the first item ignited have declined from 311 fatalities in 1980 to 129 fatalities in 2004, the most recent year of available data. An average of 120 clothing fire-related fatalities occurred annually during 2002–2004. Population fatality rates increased with age. In addition, an estimated 3,947 non-fatal injuries were treated in hospital emergency departments annually (2003–2005). Among these non-fatal injuries, 25 percent were serious enough to require admission to a hospital (compared to 5 percent for all consumer products).

B. Statutory Provisions

Section 4 of the FFA sets forth the process by which the Commission can issue or amend a flammability standard. In accordance with that section, the Commission issued an advance notice of proposed rulemaking (''ANPR'') on September 12, 2002, 67 FR 57770. The Commission issued a notice of proposed rulemaking (''NPR'') on February 27, 2007 containing the text of the proposed rule along with alternatives the Commission has considered and a preliminary regulatory analysis. 72 FR 8844. Before issuing a final rule, the FFA requires the Commission to prepare a final regulatory analysis, and make certain findings concerning any relevant voluntary standard, the relationship between costs and benefits of the rule, and the burden imposed by the regulation. 15 U.S.C. 1193(j). In addition, the Commission must find that the Standard (1) is needed to adequately protect the public against the risk of the occurrence of fire leading to death, injury or significant property damage, (2) is reasonable, technologically practicable, and appropriate, (3) is limited to fabrics, related materials or products which present unreasonable risks, and (4) is stated in objective terms. *Id.* U.S.C. 1193(b).

C. Revisions

The changes to the Standard reflect changes in consumer garment care practices and will make the Standard easier to understand. These changes are discussed below.

Definitions. Some definitions have been revised and some new ones added to eliminate confusion. In particular, the meaning of the terms ''base burn'' and ''surface flash'' have caused confusion in interpreting and reporting test results for raised surface textile fabrics. These terms are now defined in the Standard. In addition, several other relevant terms and definitions have been added. These terms include *burn time, dry cleaning, flammability, flame application time, ignition, interlining, laundering, long dimension, plain surface textile fabric, raised surface textile fabric, refurbishing, sample, specimen,* and *stop thread supply.*

Changes to the flammability tester. The test chamber prescribed in the current Standard uses a mechanical timing mechanism and is no longer available for purchase. Apparel manufacturers and testing laboratories currently use more modern flammability test chambers that incorporate electro-mechanical components to apply the ignition flame and measure burn time. (The Standard allows alternate procedures if they are as stringent as the specified procedure.) A variety of such testers are available from a number of manufacturers. The revision describes the critical parameters of a modern flammability test apparatus and provides diagrams. In 1982, CPSC staff conducted some work comparing the flame impingement time of the electrical test chamber to that of a chamber with the mechanical timing device and found that the electrical test chamber readings were comparable to and more consistent than the manual test chamber readings. The revisions expressly permit the use of electro-mechanical devices to control and apply the flame impingement.

Refurbishing methods. The Standard requires fabrics to be refurbished, that is, dry cleaned and laundered, one time before testing. The purpose of this requirement is to remove any non-durable solvent or water soluble treatment present on the fabric. It is not intended to replicate how the garment would be used or cared for by a consumer. Both the dry cleaning and laundering procedures prescribed by the current Standard are outdated. The Commission is revising these procedures to better reflect modern techniques for laundering and dry cleaning.

The method of dry cleaning that the current Standard prescribes uses perchloroethylene in an open vessel. However, perchloroethylene has been shown to cause cancer in animal tests, and use in this manner violates regulations issued by the U.S. Environmental Protection Agency. The Commission staff has not used this procedure since 1986. (The Standard allows alternate procedures if they are as stringent as the specified procedure.) Industry and independent laboratories have been using an alternative dry cleaning procedure provided in ASTM D1230, *Standard Test Method for Apparel Flammability.* This procedure uses perchloroethylene in a closed environment commercial dry cleaning machine for one cycle. The revision to the Standard prescribes a dry cleaning method based on the ASTM D1230 dry cleaning procedure.

The soap specified in the handwashing procedure in the current Standard is no longer available. Most detergents are now non-phosphate based due to environmental concerns. The revision sets forth laundering requirements based on those prescribed in American Association of Textile Chemists and Colorists (''AATCC'') 124–2001, *Appearance of Fabrics After Repeated Home Laundering.* An earlier version of this test method was incorporated into other FFA standards in 2000. 65 FR 12924, 12929, and 12935 (March 10, 2000).

Test procedures. The revision reorganizes and rewrites the test procedure in a more logical step-by-step fashion to clarify the directions for selecting the surface or direction of the fabric to be tested, how to determine when testing five additional specimens is necessary, as well as how to conduct the flammability test.

Test result interpretation and reporting. The current Standard provides no codes to report complex test results consistently which can be a problem when classification is more complex. The revision clarifies the instructions for calculating burn times and establishing the occurrence of a base burn. By defining the terms ''base burn'' and ''surface flash'' in § 1610.2, the revision provides further clarification for the reporting of test results for raised surface textile fabrics. The revision also specifies test result codes from CPSC's laboratory test manual. Uniform result codes will facilitate reporting accuracy and consistency, understanding of flammability performance, and resolution of test result differences among laboratories.

Subpart B and Subpart C. The Commission is also making changes to subparts B and C of the Standard. To reduce confusion, some provisions concerning procedures for conducting the tests that are currently in subparts B and C are moved into subpart A. This should provide a more cohesive and clearer standard. Subpart C is substantially the same, but some language has been clarified to make it more consistent with subparts A and B, and the section describing the history of the FFA and the Standard has been removed.

D. Response to Comments on the NPR

On February 27, 2007, the Commission published an NPR. 72 FR 8844. The Commission received eight written comments. These were mostly supportive and suggested minor editorial changes to the proposal. Specific issues raised by the comments are discussed below.

1. Laundering and Dry Cleaning

a. Comment. One commenter stated 60 ± 3 °C is too hot and another recommended a washing temperature consistent with the original standard.

Response. Staff reviewed the proposed water temperature for the laundering portion of the section and agreed that the wash temperature of 60 ± 3 °C (140 ± 5 °F) in the proposed rule is too hot. The current Standard, which uses a hand wash procedure, specifies 95–100 °F, with a rinse temperature of 80 °F. Since the proposal specifies machine washing, staff does not agree that it is appropriate to use a temperature suited to hand washing. The final amendments specify a wash temperature of 49 ± 3 °C (120 ± 5 °F). Staff believes this temperature is hot enough to remove any water soluble finishes from the fabric which may affect its flammability characteristics and is appropriate for a machine wash. The staff agrees that the most recent version of AATCC 124 should be referenced; the final amendments reference AATCC 124–2006.

b. Comment. One commenter recommended allowing the use of a ''trial dry cleaner'' rather than a commercial dry cleaning machine.

Response. The dry cleaning procedure in the proposed rule is similar but not identical to the procedure specified in ASTM D1230 *Standard Test Method for Flammability of Apparel Textiles,* section 9.2.1, Option B. The ASTM D1230 refurbishing procedure was found by staff and ASTM Committee D13 (Textiles) to be as stringent as the procedure specified in 16 CFR Part 1610. Because the dry cleaning method specified in the current Standard is illegal to perform in the United States, the industry and the CPSC staff have been using the ASTM D1230 section 9.2.1, Option B for many years. Staff does not have any data to indicate whether the use of a ''trial dry cleaner'' would be as stringent as the refurbishing procedure in ASTM D1230. The amount of detergent to be used in the dry cleaning procedure will depend on the capacity of the machine; this information is provided with the machine manufacturer's instructions.

c. Comment. Three commenters disagreed with the specified ballast (80% wool fabric pieces and 20% polyester fabric pieces) in the proposal.

Response. Upon further consideration, the staff has decided to change the specified ballast to 80% wool and 20% cotton to be consistent with internationally recognized dry cleaning standards.

d. Comment. Two commenters questioned the need to dry clean samples in a load that is 80% of the dry cleaning machine's capacity and suggested that the load should be 100% of the load's capacity.

Response. Staff concludes that the International Fabricare Institute's recommendation of 80% capacity is appropriate for proper dry cleaning.

2. Comments on Definitions

a. Comment. Several commenters made suggestions for changes to the definitions in the proposal. Three commenters requested clarification of ''base burn'' and one commenter suggested a change to the definition of ''long dimension.''

Response. Staff considers the proposed definition of ''base burn'' to be sufficiently clear. The definition includes specific burning characteristics that must be observed during and after each test in order to distinguish between a base burn at point of flame impingement and the type of base burn used to establish a Class 3 fabric, where the base burn starts at places on the specimen other than the point of flame impingement as a result of surface flash.

b. Comment. One commenter suggested changing the ''long dimension'' definition to ''the 150mm (6 inch) length of test specimen (cut with the 6″ dimension in the same orientation of the worst burning direction of the overall fabric).''

Response. Staff does not agree because the long dimension is not always in the fastest burning direction of the fabric. For example, when preparing preliminary test specimens to determine the fastest burning direction of a plain surface textile fabric, the 6 inch length of each specimen will be in a different fabric direction.

c. Comment. One commenter requested that a definition for ''coated fabrics'' be added to section 1610.33(a)(2).

Response. Staff agrees and has added the definition for ''coated fabrics'' from ASTM D123–03 *Standard Terminology Relating to Textiles.*

3. Comments on the Test Procedure

a. Comment. One commenter suggested that cotton fabrics, being hydrophilic, should be tested in standard humidity rather than be subject to the conditioning oven and dessicator at 0% humidity. The commenter notes the proposed conditions are more stringent than likely ''real world'' conditions and those specified in two international textile test methods.

Response. Staff realizes that cotton responds quickly to changes in humidity, but concludes that testing cotton and cotton containing fabrics under the more severe atmospheric conditions in the current standard provides a greater level of safety than testing under standard textile testing conditions. Therefore, the staff has not changed the conditioning requirements.

b. Comment. One commenter stated that the procedure for selecting test specimens in § 1610.6(a)(3)(i), Raised surface textile fabrics—(i) Preliminary trials is confusing.

Response. Staff has reviewed this language and concludes that this procedure is properly explained in the proposed rule; thus, the staff has not changed the language in the final rule. In addition, the commenter asked if there is a specific rate to be used when brushing raised-fiber surface textile fabrics. The Standard specifies only that the specimen be brushed at a uniform rate; no change was made in the proposal.

4. Comments on the Test Apparatus and Materials

a. Comment. Several comments were received on the test apparatus and materials. Several commenters on the ANPR discussed the need for testing laboratories to be allowed to use more modern versions of the flammability test chamber.

Response. In the proposed amendments the staff worked to achieve a balance between providing an appropriate description of the flammability test chamber, along with figures, without providing prescriptive requirements that would have limited the test chamber to a specific make and model.

b. Comment. In response to the NPR, one commenter asked that more detailed information on the flammability test cabinet be specified in the Standard.

Response. The final amendments provide additional details, including manufacturing tolerances and descriptive language, which the staff believes will be helpful but will not limit or discourage the use of modern equipment.

5. Comments on Exemptions, Reasonable and Representative Testing, and the Standard's Applicability to Specific Apparel Items

a. Comment. One commenter asked what the justification was for the 2.6 oz/yd^2 exemption for all plain surface fabrics and asked for the historical information that formed the basis for the exemption. The commenter further requested that, if that information could not be provided, the exemption be lowered to 2.0 oz/yd^2.

Response. This information can be found at 49 FR 242; December 14, 1984; 16 CFR part 1610 *Standard for the Flammability of Clothing Textiles;* Requirements for Testing and Recordkeeping to Support Guaranties. No change has been made to the exemptions.

b. Comment. One commenter asked for clarification about the Standard's applicability to scarves.

Response. The proposed amendment, like the current 16 CFR part 1610, applies to scarves.

c. Comment. One commenter asked that the Standard provide further guidance on reasonable and representative testing.

Response. Guidance on developing a reasonable and representative testing program was issued by the Commission in 1998 and can be found at 63 FR 42697, August 11, 1998; *Policy Statement—Reasonable and Representative Testing to Assure Compliance with the Standard for the Flammability of Clothing Textiles.*

E. Final Regulatory Analysis

Introduction

Section 4(j)(1) of the FFA requires that the Commission prepare a final regulatory analysis for a final regulation under the FFA and that it be published with the final rule. 15 U.S.C. 1193(j)(1). The following discussion, extracted from the staff's memorandum titled ''Final Regulatory Analysis of Amendment to the Flammability Standard for Clothing Textiles,'' addresses this requirement.

Potential Benefits and Costs

The clothing textiles Standard provides a minimum level of fire protection for articles of apparel worn by consumers. The amendments under consideration pertain to definitions and test methods, and are technical in nature. The amendments would not affect the substance or likely results of the performance tests in the Standard; the projected effectiveness of the Standard would neither increase nor decrease as a result. Thus, there would be no impact on the level or value of fire safety benefits (i.e., the reduced risk to the public of fire-related death, injury, or property damage) derived from the Standard.

The amendment to the Standard is not expected to increase costs to manufacturers and importers of products that currently comply. These firms have, for a number of years, been conducting compliance tests using

methods and apparatus that would be allowed under the amendments. Overall, the amendments, if issued on a final basis, would not likely have any significant impact on apparel and fabric testing costs.

On balance, the technical amendments would have no significant impact on expected benefits or costs of the flammability standard for clothing textiles. The amendment would simplify testing requirements and allow existing practices among manufacturers and importers subject to the standard.

Alternatives

There is an existing U.S. voluntary standard for wearing apparel. This standard, ASTM D1230, ''Test Method for Flammability of Apparel Textiles,'' contains performance tests that are virtually identical to those in the existing FFA standard, but that are presented in a standard ASTM format with somewhat different language on some elements. The Commission could opt to use the ASTM standard language instead of the language of the amendments. The language of the CPSC's amendments is, however, clearer and more complete than that of the ASTM standard. The ASTM alternative would have no significant economic effects.

An existing U.S. voluntary consensus standard for clothing textile washing procedures, AATCC Test Method 124–2006, is incorporated by reference in the amended federal standard. An international standard (ISO) test method also exists for apparel dry cleaning procedures. The Commission could opt to incorporate the provisions of this international standard into the amended federal standard, but they are no more clear or comprehensive than CPSC's amendments. Again, this alternative would have no significant economic effects.

In summary, there are no readily available and technically feasible alternatives that would be significantly different from the Commission's amendments. Thus, no reasonable alternative would make the standard more effective or less costly.

F. Regulatory Flexibility Certification

As discussed in the NPR, this rulemaking will have little or no effect on small businesses in the textile and apparel industries because the revisions are largely technical, updating the FFA Standard to current industry practices. Therefore, the Commission concludes that the amendment will not have a significant economic impact on a substantial number of small entities.

G. Environmental Considerations

Because the revision continues current industry practices, it is not expected to alter production processes or affect the amounts of materials used in manufacturing, packaging or labeling. Therefore, the Commission does not expect the revision to have any environmental impacts.

H. Executive Orders

Executive Order 12988 (February 5, 1996), requires agencies to state in clear language the preemptive effect, if any, to be given to a new regulation. The clothing standard amendment would modify a flammability standard issued under the FFA. The FFA provides, with certain exceptions which are not applicable in this instance, that no state or political subdivision of a state may enact or continue in effect ''a flammability standard or other regulation'' applicable to the same fabric or product covered by an FFA standard if the state or local flammability standard or other regulation is ''designed to protect against the same risk of the occurrence fire'' unless the state or local flammability standard or regulation ''is identical'' to the FFA standard. *See* section 16 of the FFA (15 U.S.C. 1203).

I. Effective Date

Section 4(b) of the FFA (15 U.S.C. 1193(b)) provides that an amendment of a flammability standard shall become effective one year from the date it is promulgated, unless the Commission finds for good cause that an earlier or later effective date is in the public interest, and publishes that finding. Section 4(b) also requires that an amendment of a flammability standard shall exempt products ''in inventory or with the trade'' on the date the amendment becomes effective, unless the Commission limits or withdraws that exemption because those products are so highly flammable that they are dangerous for use by consumers.

The Commission believes that a shorter effective date is in the public interest. The revisions reflect practices that industry and laboratories are currently following. Thus, the impact of the changes should be minimal. Moreover, making the clarifications in the revisions effective sooner than one year should be helpful to the public. Therefore, the revisions to the Standard become effective 180 days after publication in the **Federal Register**. As required by the FFA, products ''in inventory or with the trade'' would be exempt from the revised standard.

J. Findings

Section 1193(a) and (j)(2) of the FFA require the Commission to make certain findings when it issues or amends a flammability standard. The Commission must find that the standard or amendment: (1) Is needed to adequately protect the public against the risk of the occurrence of fire leading to death, injury or significant property damage; (2) is reasonable, technologically practicable, and appropriate; (3) is limited to fabrics, related materials or products which present unreasonable risks; and (4) is stated in objective terms. 15 U.S.C. 1193(b). In addition, the Commission must find that: (1) If an applicable voluntary standard has been adopted and implemented, that compliance with the voluntary standard is not likely to adequately reduce the risk of injury, or compliance with the voluntary standard is not likely to be substantial; (2) that benefits expected from the regulation bear a reasonable relationship to its costs; and (3) that the regulation imposes the least burdensome alternative that would adequately reduce the risk of injury. These findings are discussed below.

The amendment to the Standard is needed to adequately protect the public against unreasonable risk of the occurrence of fire. The Standard dates from 1953. In the past fifty years changes in technology and consumer practices have made some parts of the Standard obsolete. Through the years, some have found the Standard's terminology and organization confusing and difficult to follow. The amendment will better reflect the modern practices followed by industry and consumers, and modifications in the language and organization of the Standard will enhance its clarity.

The amendment to the Standard is reasonable, technologically practicable, and appropriate. The amendment essentially establishes in the Standard the practices currently followed by industry and testing laboratories. These changes should enhance the Standard's reasonableness, practicability, and appropriateness.

The amendment to the Standard is limited to fabrics, related materials, and products that present an unreasonable risk. The amendment continues to apply to the same textiles as the existing Standard.

Voluntary standards. The Standard is similar to ASTM D1230 *Standard Test Method for Flammability of Apparel Textiles* in methods of testing but significantly different in refurbishing procedures, terminology and criteria. The Commission believes that the

amendment will provide better clarity to industry and testing laboratories and therefore is likely to better address the risk of injury.

Relationship of benefits to costs. Because the amendment reflects current practices, both anticipated costs and benefits are likely to be negligible.

Least burdensome requirement. The amendment makes no substantive changes to the Standard, but only provides modifications that are necessary to update and clarify the Standard.

K. Conclusion

For the reasons discussed above, the Commission finds that amending the clothing textile flammability standard is needed to adequately protect the public against the unreasonable risk of the occurrence of fire leading to death, injury, and significant property damage. The Commission also finds that the amendment to the Standard is reasonable, technologically practicable, and appropriate. The Commission further finds that the amendment is limited to the fabrics, related materials and products which present such unreasonable risks.

List of Subjects in 16 CFR Part 1610

Clothing, Consumer protection, Flammable materials, Incorporation by reference, Reporting and recordkeeping requirements, Textiles, Warranties.

■ Therefore, the Commission amends Title 16 of the Code of Federal Regulations by revising part 1610 to read as follows:

PART 1610—STANDARD FOR THE FLAMMABILITY OF CLOTHING TEXTILES

Subpart A—The Standard

Sec.
1610.1 Purpose, scope and applicability.
1610.2 Definitions.
1610.3 Summary of test method.
1610.4 Requirements for classifying textiles.
1610.5 Test apparatus and materials.
1610.6 Test procedure.
1610.7 Test sequence and classification criteria.
1610.8 Reporting results.

Subpart B—Rules and Regulations

1610.31 Definitions.
1610.32 General requirements.
1610.33 Test procedures for textile fabrics and film.
1610.34 Only uncovered or exposed parts of wearing apparel to be tested.
1610.35 Procedures for testing special types of textile fabrics under the standard.
1610.36 Application of Act to particular types of products.
1610.37 Reasonable and representative tests to support guaranties.
1610.38 Maintenance of records by those furnishing guaranties.
1610.39 Shipments under section 11(c) of the Act.
1610.40 Use of alternative apparatus, procedures, or criteria for tests for guaranty purposes.

Subpart C—Interpretations and Policies

1610.61 Reasonable and representative testing to assure compliance with the standard for the clothing textiles.
FIGURE 1 TO PART 1610—SKETCH OF FLAMMABILITY APPARATUS
FIGURE 2 TO PART 1610—FLAMMABILITY APPARATUS VIEWS
FIGURE 3 TO PART 1610—SPECIMEN HOLDER SUPPORTED IN SPECIMEN RACK
FIGURE 4 TO PART 1610—AN EXAMPLE OF A TYPICAL INDICATOR FINGER
FIGURE 5 TO PART 1610—AN EXAMPLE OF A TYPICAL GAS SHIELD
FIGURE 6 TO PART 1610—IGNITER
FIGURE 7 TO PART 1610—BRUSHING DEVICE
FIGURE 8 TO PART 1610—BRUSH
FIGURE 9 TO PART 1610—BRUSHING DEVICE TEMPLATE

Authority: 15 U.S.C. 1191–1204.

Subpart A—The Standard

§ 1610.1 Purpose, scope and applicability.

(a) *Purpose.* The purpose of this standard is to reduce danger of injury and loss of life by providing, on a national basis, standard methods of testing and rating the flammability of textiles and textile products for clothing use, thereby prohibiting the use of any dangerously flammable clothing textiles.

(b) *Scope.* The Standard provides methods of testing the flammability of clothing and textiles intended to be used for clothing, establishes three classes of flammability, sets forth the requirements which textiles shall meet to be classified, and warns against the use of those textiles which have burning characteristics unsuitable for clothing. Hereafter, ''clothing and textiles intended to be used for clothing'' shall be referred to as ''textiles.''

(c) *Specific exceptions.* This standard shall not apply to: (1) Hats, provided they do not constitute or form part of a covering for the neck, face, or shoulders when worn by individuals;

(2) Gloves, provided they are not more than 14 inches in length and are not affixed to or do not form an integral part of another garment;

(3) Footwear, provided it does not consist of hosiery in whole or part and is not affixed to or does not form an integral part of another garment;

(4) Interlining fabrics, when intended or sold for use as a layer between an outer shell and an inner lining in wearing apparel.

(d) *Specific exemptions.* Experience gained from years of testing in accordance with the Standard demonstrates that certain fabrics consistently yield acceptable results when tested in accordance with the Standard. Therefore, persons and firms issuing an initial guaranty of any of the following types of fabrics, or of products made entirely from one or more of these fabrics, are exempt from any requirement for testing to support guaranties of those fabrics:

(1) Plain surface fabrics, regardless of fiber content, weighing 2.6 ounces per square yard or more; and

(2) All fabrics, both plain surface and raised-fiber surface textiles, regardless of weight, made entirely from any of the following fibers or entirely from combination of the following fibers: acrylic, modacrylic, nylon, olefin, polyester, wool.

(e) *Applicability.* The requirements of this part 1610 shall apply to textile fabric or related material in a form or state ready for use in an article of wearing apparel, including garments and costumes finished for consumer use.

§ 1610.2 Definitions.

In addition to the definitions given in Section 2 of the Flammable Fabrics Act as amended (15 U.S.C. 1191), the following definitions apply for this part 1610.

(a) *Base burn* (also known as base fabric ignition or fusing) means the point at which the flame burns the ground (base) fabric of a raised surface textile fabric and provides a self-sustaining flame. Base burns, used to establish a Class 3 fabric, are those burns resulting from surface flash that occur on specimens in places other than the point of impingement when the warp and fill yarns of a raised surface textile fabric undergo combustion. Base burns can be identified by an opacity change, scorching on the reverse side of the fabric, or when a physical hole is evident.

(b) *Burn time* means the time elapsed from ignition until the stop thread is severed as measured by the timing mechanism of the test apparatus.

(c) *Dry cleaning* means the cleaning of samples in a commercial dry cleaning machine under the conditions described in § 1610.6.

(d) *Film* means any non-rigid, unsupported plastic, rubber or other synthetic or natural film or sheeting, subject to the Act, or any combination thereof, including transparent, translucent, and opaque material, whether plain, embossed, molded, or otherwise surface treated, which is in a

form or state ready for use in wearing apparel, and shall include film or sheeting of any thickness.

(e) *Flammability* means those characteristics of a material that pertain to its relative ease of ignition and relative ability to sustain combustion.

(f) *Flame application* time means the 1 second during which the ignition flame is applied to the test specimen.

(g) *Ignition* means that there is a self-sustaining flame on the specimen after the test flame is removed.

(h) *Interlining* means any textile which is intended for incorporation into an article of wearing apparel as a layer between an outer shell and an inner lining.

(i) *Laundering* means washing with an aqueous detergent solution and includes rinsing, extraction and tumble drying as described in § 1610.6.

(j) *Long dimension* means the 150 mm (6 in) length of test specimen.

(k) *Plain surface textile* fabric means any textile fabric which does not have an intentionally raised fiber or yarn surface such as a pile, nap, or tuft, but shall include those fabrics that have fancy woven, knitted or flock-printed surfaces.

(l) *Raised surface textile fabric* means any textile fabric with an intentionally raised fiber or yarn surface, such as a pile, including flocked pile, nap, or tufting.

(m) *Refurbishing* means dry cleaning and laundering in accordance with § 1610.6.

(n) *Sample* means a portion of a lot of material which is taken for testing or for record keeping purposes.

(o) *Specimen* means a 50 mm by 150 mm (2 in by 6 in) section of sample.

(p) *Stop thread supply* means No. 50, white, mercerized, 100% cotton sewing thread.

(q) *Surface flash* means a rapid burning of the pile fibers and yarns on a raised fiber surface textile that may or may not result in base burning.

(r) *Textile fabric* means any coated or uncoated material subject to the Act, except film and fabrics having a nitro-cellulose fiber, finish, or coating, which is woven, knitted, felted or otherwise produced from any natural or manmade fiber, or substitute therefore, or combination thereof, of 50 mm (2 in) or more in width, and which is in a form or state ready for use in wearing apparel, including fabrics which have undergone further processing, such as dyeing and finishing, in garment form, for consumer use.

§ 1610.3 Summary of test method.

The Standard provides methods of testing the flammability of textiles from or intended to be used for apparel; establishes three classes of flammability; sets forth the requirements for classifying textiles; and prohibits the use of single or multi-layer textile fabrics that have burning characteristics that make them unsuitable for apparel. All textiles shall be tested before and after refurbishing according to § 1610.6. Each specimen cut from the textile shall be inserted in a frame, brushed if it has a raised-fiber surface, and held in a special apparatus at an angle of 45°. A standardized flame shall be applied to the surface near the lower end of the specimen for 1 second, and the time required for the flame to proceed up the fabric a distance of 127 mm (5 in) shall be recorded. A notation shall be made as to whether the base of a raised-surface textile fabric ignites or fuses.

§ 1610.4 Requirements for classifying textiles.

(a) *Class 1, Normal Flammability.* Class 1 textiles exhibit normal flammability and are acceptable for use in clothing. This class shall include textiles which meet the minimum requirements set forth in paragraph (a)(1) or paragraph (a)(2) of this section.

(1) *Plain surface textile fabric.* Such textiles in their original state and/or after being refurbished as described in § 1610.6(a) and § 1610.6(b), when tested as described in § 1610.6 shall be classified as Class 1, Normal flammability, when the burn time is 3.5 seconds or more.

(2) *Raised surface textile fabric.* Such textiles in their original state and/or after being refurbished as described in § 1610.6(a) and § 1610.6(b), when tested as described in § 1610.6, shall be classified as Class 1, Normal flammability, when the burn time is more than 7 seconds, or when they burn with a rapid surface flash (0 to 7 seconds), provided the intensity of the flame is so low as not to ignite or fuse the base fabric.

(b) *Class 2, Intermediate flammability.* Class 2 fabrics, applicable only to raised-fiber surface textiles, are considered to be of intermediate flammability, but may be used for clothing. This class shall include textiles which meet the minimum requirements set forth in paragraph (b)(2) of this section.

(1) *Plain surface textile fabric.* Class 2 is not applicable to plain surface textile fabrics.

(2) *Raised surface textile fabric.* Such textiles in their original state and/or after being refurbished as described in § 1610.6(a) and § 1610.6(b), when tested as described in § 1610.6, shall be classified as Class 2, Intermediate flammability, when the burn time is from 4 through 7 seconds, both inclusive, and the base fabric ignites or fuses.

(c) *Class 3, Rapid and intense burning.* Class 3 textiles exhibit rapid and intense burning, are dangerously flammable and shall not be used for clothing. This class shall include textiles which have burning characteristics as described in paragraphs (c)(1) and (c)(2) of this section. Such textiles are considered dangerously flammable because of their rapid and intense burning.

(1) *Plain surface textile fabric.* Such textiles in their original state and/or after refurbishing as described in § 1610.6(a) and § 1610.6(b), when tested as described in § 1610.6, shall be classified as Class 3 Rapid and Intense Burning when the time of flame spread is less than 3.5 seconds.

(2) *Raised surface textile fabric.* Such textiles in their original state and/or after refurbishing as described in § 1610.6(a) and § 1610.6(b), when tested as described in § 1610.6, shall be classified as Class 3 Rapid and Intense Burning when the time of flame spread is less than 4 seconds, and the base fabric starts burning at places other than the point of impingement as a result of the surface flash (test result code SFBB).

TABLE 1 TO § 1610.4.—SUMMARY OF TEST CRITERIA FOR SPECIMEN CLASSIFICATION [SEE § 1610.7]

Class	Plain surface textile fabric	Raised surface textile fabric
1	Burn time is 3.5 seconds or more ACCEPTABLE (3.5 sec is a pass).	(1) Burn time is greater than 7.0 seconds; or (2) Burn time is 0–7 seconds with no base burns (SFBB). Exhibits rapid surface flash only. ACCEPTABLE.

TABLE 1 TO § 1610.4.—SUMMARY OF TEST CRITERIA FOR SPECIMEN CLASSIFICATION—Continued
[SEE § 1610.7]

Class	Plain surface textile fabric	Raised surface textile fabric
2	Class 2 is not applicable to plain surface textile fabrics	Burn time is 4–7 seconds (inclusive) with base burn (SFBB). ACCEPTABLE.
3	Burn time is less than 3.5 seconds. NOT ACCEPTABLE	Burn time is less than 4.0 seconds with base burn (SFBB). NOT ACCEPTABLE.

§ 1610.5 Test apparatus and materials.

(a) *Flammability apparatus.* The flammability test apparatus consists of a draft-proof ventilated chamber enclosing a standardized ignition mechanism, sample rack, and automatic timing mechanism. The flammability apparatus shall meet the minimum requirements for testing as follows.

(1) *Test chamber—(i) Test chamber structure.* The test chamber shall be a metal, draft-proof ventilated chamber. The test chamber shall have inside dimensions of 35.3 cm high by 36.8 cm wide by 21.6 cm deep (14 in by 14.5 in by 8.5 in). There shall be eleven or twelve 12.7 mm diameter (0.5 in) holes equidistant along the rear of the top closure. The front of the chamber shall be a close fitting door with an insert made of clear material (i.e., glass, plexiglass) to permit observation of the entire test. A ventilating strip is provided at the base of the door in the front of the apparatus. The test chamber to be used in this test method is illustrated in Figures 1 and 2 of this part.

(ii) *Specimen rack.* The specimen rack provides support for the specimen holder (described in paragraph (a)(1)(iii) of this section) in which the specimen is mounted for testing. The angle of inclination shall be 45°. Two guide pins projecting downward from the center of the base of the rack travel in slots provided in the floor of the chamber so that adjustment can be made for the thickness of the specimen in relation to the test flame. A stop shall be provided in the base of the chamber to assist in adjusting the position of the rack. The specimen rack shall be constructed so that: It supports the specimen holder in a way that does not obstruct air flow around the bottom edge of the fabric specimen; and the fabric specimen is properly aligned with the igniter tip during flame impingement. The specimen rack to be used in this test method is illustrated in Figures 1 through 3 of this part. Movable rack: Refer to the manufacturers' instruction in relation to the adjustment procedure to move the rack into the appropriate position for the indicator finger alignment.

(iii) *Specimen holder.* The specimen holder supports and holds the fabric specimen. The specimen holder shall consist of two 2 mm (0.06 in) thick U-shaped matched metal plates. The plates are slotted and loosely pinned for alignment. The specimen shall be firmly sandwiched in between the metal plates with clamps mounted along the sides. The two plates of the holder shall cover all but 3.8 cm (1.5 in) of the width of the specimen for its full length. See Figures 1 and 3 of this part. The specimen holder shall be supported in the draft-proof chamber on the rack at an angle of 45°.

(iv) *Indicator finger.* The position of the specimen rack (described in paragraph (a)(1)(ii) of this section) shall be adjusted, so the tip of the indicator finger just touches the surface of the specimen. An indicator finger is necessary to ensure that the tip of the test flame will impinge on the specimen during testing. The indicator finger to be used in this test method is illustrated in Figures 1, 2 and 4 of this part.

(v) *Ignition mechanism.* The ignition mechanism shall consist of a motor driven butane gas jet formed around a 26-gauge hypodermic needle and creates the test flame. The test flame shall be protected by a shield. See Figure 5. The test flame is adjusted to 16 mm (0.625 in) and applied to the specimen for 1 second. A trigger device is located in the front of the apparatus, the pulling or pushing of which activates the test flame impingement and timing device. Electro-mechanical devices (*i.e.*, servo-motors, solenoids, micro-switches, and electronic circuits, in addition to miscellaneous custom made cams and rods, shock absorbing linkages, and various other mechanical components) can be used to control and apply the flame impingement. See Figure 6 of this part.

(vi) *Draft ventilator strip.* A draft ventilator strip shall be placed across the front opening, sealing the space between the sliding door when in lowered position and the base on which the grid rack is attached. (See Figure 1 of this part.)

(vii) *Stop weight.* The weight, attached by means of a clip to the stop thread, in dropping actuates the stop motion for the timing mechanism. The weight shall be at least 30g (1.16 oz).

(viii) *Door.* The door shall be a clear (*i.e.* glass or plexiglass) door, close fitting and allows for viewing of the entire test.

(ix) *Hood.* The hood or other suitable enclosure shall provide a draft-proof environment surrounding the test chamber. The hood or other suitable enclosure shall have a fan or other means for exhausting smoke and/or fumes produced by testing.

(2) *Stop thread and thread guides—(i) Stop thread.* The stop thread shall be stretched from the spool through suitable thread guides provided on the specimen holder and chamber walls.

(ii) *Stop thread supply.* This supply, consisting of a spool of No. 50, white, mercerized, 100% cotton sewing thread, shall be fastened to the side of the chamber and can be withdrawn by releasing the thumbscrew holding it in position.

(iii) *Thread Guides.* The thread guides permit the lacing of the stop thread in the proper position exactly 127 mm (5 in) from the point where the center of the ignition flame impinges on the test specimen. The stop thread shall be 9.5 mm (0.37 in) above and parallel to the lower surface of the top plate of the specimen holder. This condition can be achieved easily and reproducibly with the use of a thread guide popularly referred to as a ''sky hook'' suspended down from the top panel along with two L-shaped thread guides attached to the upper end of the top plate of the specimen holder. Two other thread guides can be installed on the rear panel to draw the thread away from directly over the test flame. The essential condition, however, is the uniform height of 9.5 mm (0.37 in) for the stop thread and not the number, placement or design of the thread guides.

(iv) *Stop weight thread guide.* This thread guide shall be used to guide the stop thread when attaching the stop weight.

(3) *Supply for test flame.* (i) The fuel supply shall be a cylinder of chemically pure (c. p.) butane.

(ii) The fuel-tank control valve shall consist of a sensitive control device for regulating the fuel supply at the tank.

(iii) The flow control device, such as a manometer or flow meter, shall be sufficient to maintain a consistent flame length of 16 mm (5/8 in).

(4) *Timing Device.* The timing device consists of a timer, driving mechanism and weight. The timer, by means of special attachments, is actuated to start by connection with the gas jet. A trigger device (described in paragraph (a)(1)(v) of this section) activates the flame impingement, causing the driving mechanism to move the gas jet to its most forward position and automatically starts the timer at the moment of flame impact with the specimen. The falling weight, when caused to move by severance of the stop thread, stops the timer. Time shall be read directly and recorded as a burn time. Read burn time to 0.1 second. An electronic or mechanical timer can be used to record the burn time, and electro-mechanical devices (*i.e.,* servo-motors, solenoids, micro-switches, and electronic circuits, in addition to miscellaneous custom made cams and rods, shock absorbing linkages, and various other mechanical components) can be used to control and apply the flame impingement.

(b) *Specimen preparation equipment and materials.*

(1) *Laboratory drying oven.* This shall be a forced circulation drying oven capable of maintaining 105° ± 3° C (221° ± 5° F) for 30 ± 2 minutes to dry the specimens while mounted in the specimen holders.

(2) *Desiccator.* This shall be an airtight and moisture tight chamber capable of holding the specimens horizontally without contacting each other during the cooling period following drying, and shall contain silica gel desiccant.

(3) *Desiccant.* Anhydrous silica gel shall be used as the desiccant.

(4) *Automatic washing machine.* The automatic washing machine shall be as described in § 1610.6(b)(1)(ii).

(5) *Automatic tumble dryer.* The automatic tumble dryer shall be as described in § 1610.6(b)(1)(ii).

(6) *Commercial dry cleaning machine.* The commercial dry cleaning machine shall be capable of providing a complete automatic dry-to-dry cycle using perchloroethylene solvent and a cationic drycleaning detergent as specified in § 1610.6(b)(1)(i).

(7) *Dry cleaning solvent.* The solvent shall be perchloroethylene, commercial grade.

(8) *Dry cleaning detergent.* The dry cleaning detergent shall be cationic class.

(9) *Laundering detergent.* The laundering detergent shall be as specified in § 1610.6(b)(1)(ii).

(10) *Brushing device.* The brushing device shall consist of a base board over which a small carriage is drawn. See Figure 7 of this part. This carriage runs on parallel tracks attached to the edges of the upper surface of the base board. The brush is hinged with pin hinges at the rear edge of the base board and rests on the carriage vertically with a pressure of 150 gf (0.33 lbf). The brush shall consist of two rows of stiff nylon bristles mounted with the tufts in a staggered position. The bristles are 0.41 mm (0.016 in) in diameter and 19 mm (0.75 in) in length. There are 20 bristles per tuft and 4 tufts per inch. See Figure 8 of this part. A clamp is attached to the forward edge of the movable carriage to permit holding the specimen on the carriage during the brushing operation. The purpose of the metal plate or ''template'' on the carriage of the brushing device is to support the specimen during the brushing operation. The template shall be 3.2 mm (0.13 in) thick. See Figure 9 of this part.

§ 1610.6 Test procedure.

The test procedure is divided into two steps. Step 1 is testing in the original state; Step 2 is testing after the fabric has been refurbished according to paragraph (b)(1) of this section.

(a) *Step 1—Testing in the original state.*

(1) Tests shall be conducted on the fabric in a form or state ready for use in wearing apparel. Determine whether the fabric to be tested is a plain surface textile fabric or a raised surface textile fabric as defined in § 1610.2 (k) and (l). There are some fabrics that require extra attention when preparing test specimens because of their particular construction characteristics. Examples of these fabrics are provided in paragraphs (a)(1)(i) through (vi) of this section along with guidelines for preparing specimens from these fabrics. This information is not intended to be all-inclusive.

(i) *Flocked fabrics.* Fabrics that are flocked overall are treated as raised surface textile fabrics as defined in § 1610.2(l). Flock printed fabrics (usually in a pattern and not covering the entire surface) shall be treated as plain surface textile fabrics as defined in § 1610.2(k).

(ii) *Cut velvet fabrics.* Cut velvet fabrics with a patterned construction shall be considered a raised surface textile fabric as defined in § 1610.2(l).

(iii) *Metallic thread fabrics.* Metallic thread fabrics shall be considered plain surface textile fabrics provided the base fabric is smooth. The specimens shall be cut so that the metallic thread is parallel to the long dimension of the specimen and arranged so the test flame impinges on a metallic thread.

(iv) *Embroidery.* Embroidery on netting material shall be tested with two sets of preliminary specimens to determine the most flammable area (which offers the greatest amount of netting or embroidery in the 150 mm (6 in.) direction). One set of netting only shall be tested and the other set shall consist mainly of embroidery with the specimens cut so that the test flame impinges on the embroidered area. Test the most flammable area according to the plain surface textile fabric requirements. The full test shall be completed on a sample cut from the area that has the fastest burn rate.

(v) *Burn-out patterns.* Flat woven constructions with burn-out patterns shall be considered plain surface textile fabrics as defined in § 1610.2(k).

(vi) *Narrow fabrics and loose fibrous materials.* Narrow fabrics and loose fibrous materials manufactured less than 50 mm (2 in) in width in either direction shall not be tested. If a 50 mm by 150 mm (2 in by 6 in) specimen cannot be cut due to the nature of the item, *i.e.* hula skirts, leis, fringe, loose feathers, wigs, hairpieces, etc., do not conduct a test.

(2) *Plain surface textile fabrics: (i) Preliminary trials.* Conduct preliminary trials to determine the quickest burning direction. The specimen size shall be 50 mm by 150 mm (2 in by 6 in). Cut one specimen from each direction of the fabric. Identify the fabric direction being careful not to make any identifying marks in the exposed area to be tested. Preliminary specimens shall be mounted and conditioned as described in paragraphs (a)(2)(ii) through (iv) of this section and then tested following the procedure in paragraph (c) of this section to determine if there is a difference in the burning characteristics with respect to the direction of the fabric.

(ii) *Identify and cut test specimens.* Cut the required number of test specimens to be tested (refer to § 1610.7(b)(1)). Each specimen shall be 50 mm by 150 mm (2 in by 6 in), with the long dimension in the direction in which burning is most rapid as established in the preliminary trials. Be careful not to make any identifying marks in the exposed area to be tested.

(iii) *Mount specimens.* Specimens shall be placed in the holders, with the side to be burned face up. Even though plain surface textile fabrics are not brushed, all specimens shall be mounted in a specimen holder placed on the carriage that rides on the

brushing device to ensure proper position in the holder. A specimen shall be placed between the two metal plates of a specimen holder and clamped. Each specimen shall be mounted and clamped prior to conditioning and testing.

(iv) *Condition specimens.* All specimens mounted in the holders shall then be placed in a horizontal position on an open metal shelf in the oven to permit free circulation of air around them. The specimens shall be dried in the oven for 30 ± 2 minutes at 105° ± 3° C (221° ± 5° F), removed from the oven and placed over a bed of anhydrous silica gel desiccant in a desiccator until cool, but not less than 15 minutes.

(v) *Flammability test.* Follow the test procedure in paragraph (c) of this section and also follow the test sequence in § 1610.7(b)(1).

(3) *Raised surface textile fabrics*—(i) Preliminary trials. The most flammable surface of the fabric shall be tested. Conduct preliminary trials and/or visual examination to determine the quickest burning area. The specimen size shall be 50 mm by 150 mm (2 in by 6 in). For raised surface textile fabrics, the direction of the lay of the surface fibers shall be parallel with the long dimension of the specimen. Specimens shall be taken from that part of the raised-fiber surface that appears to have the fastest burn time. For those fabrics where it may be difficult to visually determine the correct direction of the lay of the raised surface fibers, preliminary tests can be done to determine the direction of the fastest burn time. For textiles with varying depths of pile, tufting, etc., the preliminary test specimens are taken from each depth of pile area to determine which exhibits the quickest rate of burning. A sufficient number of preliminary specimens shall be tested to provide adequate assurance that the raised surface textile fabric will be tested in the quickest burning area. Preliminary specimens shall be mounted and conditioned as described below and tested following the procedure in paragraph (c) of this section.

(ii) *Identify and cut test specimens.* Cut the required number of specimens (refer to § 1610.7(b)(3)) to be tested. Each specimen shall be 50 mm by 150 mm (2 in by 6 in), with the specimen taken from the direction in which burning is most rapid as established in the preliminary trials and/or visual examination. Be careful not to make any identifying marks in the exposed area to be tested.

(iii) *Mount specimens.* Prior to mounting the specimen, run a fingernail along the 150 mm (6 in) edge of the fabric not more than 6.4 mm (0.25 in) in from the side to determine the lay of the surface fibers. All specimens shall be mounted in a specimen holder placed on the carriage that rides on the brushing device. The specimens shall be mounted with the side to be burned face up and positioned so the lay of the surface fibers is going away from the closed end of the specimen holder. The specimen must be positioned in this manner so that the brushing procedure described in paragraph (a)(3)(iv) of this section will raise the surface fibers, *i.e.*, the specimen is brushed against the direction of the lay of the surface fibers. The specimen shall be placed between the two metal plates of the specimen holder and clamped.

(iv) *Brush specimens.* After mounting in the specimen holder (and with the holder still on the carriage that rides on the brushing device) each specimen shall be brushed one time. The carriage is pushed to the rear of the brushing device, see Figure 7, and the brush, see Figure 8, lowered to the face of the specimen. The carriage shall be drawn forward by hand once against the lay of the surface fibers at a uniform rate. Brushing of a specimen shall be performed with the specimen mounted in a specimen holder. The purpose of the metal plate or ''template'' on the carriage of the brushing device is to support the specimen during the brushing operation. See Figure 9.

(v) *Condition specimens.* All specimens (mounted and brushed) in the holders shall be then placed in a horizontal position on an open metal shelf in the oven to permit free circulation of air around them. The specimens shall be dried in the oven for 30 ± 2 minutes at 105° ± 3° C (221 ° ± 5° F) removed from the oven and placed over a bed of anhydrous silica gel dessicant in a desiccator until cool, but not less than 15 minutes.

(vi) *Conduct flammability test.* Follow the procedure in paragraph (c) of this section and follow the test sequence in § 1610.7(b)(3).

(b) *Step 2—Refurbishing and testing after refurbishing.*

(1) The refurbishing procedures are the same for both plain surface textile fabrics and raised fiber surface textile fabrics. Those samples that result in a Class 3, Rapid and Intense Burning after Step 1 testing in the original state shall not be refurbished and shall not undergo Step 2.

(i) *Dry cleaning procedure.* (A) All samples shall be dry cleaned before they undergo the laundering procedure. Samples shall be dry cleaned in a commercial dry cleaning machine, using the following prescribed conditions:

Solvent: Perchloroethylene, commercial grade
Detergent class: Cationic.
Cleaning time: 10–15 minutes.
Extraction time: 3 minutes.
Drying Temperature: 60–66° C (140–150° F).
Drying Time: 18–20 minutes.
Cool Down/Deodorization time: 5 minutes.

Samples shall be dry cleaned in a load that is 80% of the machine's capacity.

(B) If necessary, ballast consisting of clean textile pieces or garments, white or light in color and consisting of approximately 80% wool fabric pieces and 20% cotton fabric pieces, shall be used.

(ii) *Laundering procedure.* The sample, after being subjected to the dry cleaning procedure, shall be washed and dried one time in accordance with sections 8.2.2, 8.2.3 and 8.3.1(A) of AATCC Test Method 124–2006 ''Appearance of Fabrics after Repeated Home Laundering'' (incorporated by reference at § 1610.6(b)(1)(B)(iii)). Washing shall be performed in accordance with sections 8.2.2 and 8.2.3 of AATCC Test Method 124–2006 using AATCC 1993 Standard Reference Detergent, powder and wash water temperature (IV) (120° * 50* F; 49* * 30* C) specified in Table II of that method, and the water level, agitator speed, washing time, spin speed and final spin cycle specified for ''Normal/Cotton Sturdy'' in Table III. A maximum wash load shall be 8 pounds (3.63 kg) and may consist of any combination of test samples and dummy pieces. Drying shall be performed in accordance with section 8.3.1(A) of that test method, Tumble Dry, using the exhaust temperature (150° * 10 °F; 66° * 5 °C) and cool down time of 10 minutes specified in the ''Durable Press'' conditions of Table IV.

(iii) AATCC Test Method 124–2006 ''Appearance of Fabrics after Repeated Home Laundering,'' is incorporated by reference. The Director of the Federal Register approves this incorporation by reference in accordance with 5 U.S.C. 552(a) and 1 CFR part 51. You may obtain a copy from the American Association of Textile Chemists and Colorists, P.O. Box 12215, Research Triangle Park, North Carolina 27709. You may inspect a copy at the Office of the Secretary, Consumer Product Safety Commission, Room 502, 4330 East West Highway, Bethesda, Maryland 20814 or at the National Archives and Records Administration (NARA). For

information on the availability of this material at NARA, call 202–741–6030, or go to *http://www.archives.gov/federal_register/code_of_federal_regulations/ibr_locations.html.*

(2) *Testing plain surface textile fabrics after refurbishing.* The test procedure is the same as for Step 1—Testing in the original state described in paragraph (a)(1) of this section; also follow the test sequence § 1610.7(b)(2).

(3) *Testing raised fiber surface textile fabrics after refurbishing.* The test procedure is the same as for Step 1—Testing in the original state as described in paragraph (a)(3) of this section; also follow the test sequence in § 1610.7(b)(4).

(c) *Procedure for testing flammability.* (1) The test chamber shall be located under the hood (or other suitable enclosure) with the fan turned off. Open the control valve in the fuel supply. Allow approximately 5 minutes for the air to be drawn from the fuel line, ignite the gas and adjust the test flame to a length of 16 mm (⅝ in), measured from its tip to the opening in the gas nozzle.

(2) Remove one mounted specimen from the desiccator at a time and place it in position on the specimen rack in the chamber of the apparatus. Thick fabrics may require adjustment of the specimen rack so that the tip of the indicator finger just touches the surface of the specimen.

(3) Adjust the position of the specimen rack of the flammability test chamber so that the tip of the indicator finger just touches the face of the mounted specimen.

(4) String the stop thread through the guides in the upper plate of the specimen holder across the top of the specimen, and through any other thread guide(s) of the chamber. Hook the stop weight in place close to and just below the stop weight thread guide. Set the timing mechanism to zero. Close the door of the flammability test chamber.

(5) Begin the test within 45 seconds of the time the specimen was removed from the desiccator. Activate the trigger device to impinge the test flame. The trigger device controls the impingement of the test flame onto the specimen and starts the timing device. The timing is automatic and stops when the weight is released by the severing of the stop thread.

(6) At the end of each test, turn on the hood fan to exhaust any fumes or smoke produced during the test.

(7) Record the burn time (reading of the timer) for each specimen, along with visual observation using the test result codes given in § 1610.8. If there is no burn time, record the visual observation using the test result codes. Please note for raised-fiber surface textile fabrics, specimens should be allowed to continue burning, even though a burn rate is measured, to determine if the base fabric will fuse.

(8) After exhausting all fumes and smoke produced during the test, turn off the fan before testing the next specimen.

§ 1610.7 Test sequence and classification criteria.

(a) *Preliminary and final classifications.* Preliminary classifications are assigned based on the test results both before and after refurbishing. The final classification shall be the preliminary classification before or after refurbishing, whichever is the more severe flammability classification.

(b) *Test sequence and classification criteria.*

(1) Step 1, Plain Surface Textile Fabrics in the original state.

(i) Conduct preliminary tests in accordance with § 1610.6(a)(2)(i) to determine the fastest burning direction of the fabric.

(ii) Prepare and test five specimens from the fastest burning direction. The burn times determine whether to assign the preliminary classification and proceed to § 1610.6(b) or to test five additional specimens.

(iii) Assign the preliminary classification of Class 1, Normal Flammability and proceed to § 1610.6(b) when:

(A) There are no burn times; or

(B) There is only one burn time and it is equal to or greater than 3.5 seconds; or

(C) The average burn time of two or more specimens is equal to or greater than 3.5 seconds.

(iv) Test five additional specimens when there is either only one burn time, and it is less than 3.5 seconds; or there is an average burn time of less than 3.5 seconds. Test these five additional specimens from the fastest burning direction as previously determined by the preliminary specimens. The burn times for the 10 specimens determine whether to:

(A) Stop testing and assign the final classification as Class 3, Rapid and Intense Burning only when there are two or more burn times with an average burn time of less than 3.5 seconds; or

(B) Assign the preliminary classification of Class 1, Normal Flammability and proceed to § 1610.6(b) when there are two or more burn times with an average burn time of 3.5 seconds or greater.

(v) If there is only one burn time out of the 10 test specimens, the test is inconclusive. The fabric cannot be classified.

(2) Step 2, Plain Surface Textile Fabrics after refurbishing in accordance with § 1610.6(b)(1).

(i) Conduct preliminary tests in accordance with § 1610.6(a)(2)(i) to determine the fastest burning direction of the fabric.

(ii) Prepare and test five specimens from the fastest burning direction. The burn times determine whether to stop testing and assign the preliminary classification or to test five additional specimens.

(iii) Stop testing and assign the preliminary classification of Class 1, Normal Flammability, when:

(A) There are no burn times; or

(B) There is only one burn time, and it is equal to or greater than 3.5 seconds; or

(C) The average burn time of two or more specimens is equal to or greater than 3.5 seconds.

(iv) Test five additional specimens when there is only one burn time, and it is less than 3.5 seconds; or there is an average burn time less than 3.5 seconds. Test five additional specimens from the fastest burning direction as previously determined by the preliminary specimens. The burn times for the 10 specimens determine the preliminary classification when:

(A) There are two or more burn times with an average burn time of 3.5 seconds or greater. The preliminary classification is Class 1, Normal Flammability; or

(B) There are two or more burn times with an average burn time of less than 3.5 seconds. The preliminary and final classification is Class 3, Rapid and Intense Burning; or

(v) If there is only one burn time out of the 10 specimens, the test results are inconclusive. The fabric cannot be classified.

(3) Step 1, Raised Surface Textile Fabric in the original state.

(i) Determine the area to be most flammable per § 1610.6(a)(3)(i).

(ii) Prepare and test five specimens from the most flammable area. The burn times and visual observations determine whether to assign a preliminary classification and proceed to § 1610.6(b) or to test five additional specimens.

(iii) Assign the preliminary classification and proceed to § 1610.6(b) when:

(A) There are no burn times. The preliminary classification is Class 1, Normal Flammability; or

(B) There is only one burn time and it is less than 4 seconds without a base burn, or it is 4 seconds or greater with or without a base burn. The preliminary

classification is Class 1, Normal Flammability; or

(C) There are no base burns regardless of the burn time(s). The preliminary classification is Class 1, Normal Flammability; or

(D) There are two or more burn times with an average burn time of 0–7 seconds with a surface flash only. The preliminary classification is Class 1, Normal Flammability; or

(E) There are two or more burn times with an average burn time greater than 7 seconds with any number of base burns. The preliminary classification is Class 1, Normal Flammability; or

(F) There are two or more burn times with an average burn time of 4 through 7 seconds (both inclusive) with no more than one base burn. The preliminary classification is Class 1, Normal Flammability; or

(G) There are two or more burn times with an average burn time less than 4 seconds with no more than one base burn. The preliminary classification is Class 1, Normal Flammability; or

(H) There are two or more burn times with an average burn time of 4 through 7 seconds (both inclusive) with two or more base burns. The preliminary classification is Class 2, Intermediate Flammability.

(iv) Test five additional specimens when the tests of the initial five specimens result in either of the following: There is only one burn time and it is less than 4 seconds with a base burn; or the average of two or more burn times is less than 4 seconds with two or more base burns. Test these five additional specimens from the most flammable area. The burn times and visual observations for the 10 specimens will determine whether to:

(A) Stop testing and assign the final classification only if the average burn time for the 10 specimens is less than 4 seconds with three or more base burns. The final classification is Class 3, Rapid and Intense Burning; or

(B) Assign the preliminary classification and continue on to § 1610.6(b) when:

(*1*) The average burn time is less than 4 seconds with no more than two base burns. The preliminary classification is Class 1, Normal Flammability; or

(*2*) The average burn time is 4–7 seconds (both inclusive) with no more than 2 base burns. The preliminary classification is Class 1, Normal Flammability, or

(*3*) The average burn time is greater than 7 seconds. The preliminary classification is Class 1, Normal Flammability; or

(*4*) The average burn time is 4 through 7 seconds (both inclusive) with three or more base burns. The preliminary classification is Class 2, Intermediate Flammability, or

(v) If there is only one burn time out of the 10 specimens, the test is inconclusive. The fabric cannot be classified.

(4) Step 2, Raised Surface Textile Fabric After Refurbishing in accordance with § 1610.6(b).

(i) Determine the area to be most flammable in accordance with § 1610.6(a)(3)(i).

(ii) Prepare and test five specimens from the most flammable area. Burn times and visual observations determine whether to stop testing and determine the preliminary classification or to test five additional specimens.

(iii) Stop testing and assign the preliminary classification when:

(A) There are no burn times. The preliminary classification is Class 1, Normal Flammability; or

(B) There is only one burn time, and it is less than 4 seconds without a base burn; or it is 4 seconds or greater with or without a base burn. The preliminary classification is Class 1, Normal Flammability; or

(C) There are no base burns regardless of the burn time(s). The preliminary classification is Class 1, Normal Flammability; or

(D) There are two or more burn times with an average burn time of 0 to 7 seconds with a surface flash only. The preliminary classification is Class 1, Normal Flammability; or

(E) There are two or more burn times with an average burn time greater than 7 seconds with any number of base burns. The preliminary classification is Class 1, Normal Flammability; or

(F) There are two or more burn times with an average burn time of 4 through 7 seconds (both inclusive) with no more than one base burn. The preliminary classification is Class 1, Normal Flammability; or

(G) There are two or more burn times with an average burn time less than 4 seconds with no more than one base burn. The preliminary classification is Class 1, Normal Flammability; or

(H) There are two or more burn times with an average burn time of 4 through 7 seconds (both inclusive) with two or more base burns. The preliminary classification is Class 2, Intermediate Flammability.

(iv) Test five additional specimens when the tests of the initial five specimens result in either of the following: There is only one burn time, and it is less than 4 seconds with a base burn; or the average of two or more burn times is less than 4 seconds with two or more base burns.

(v) If required, test five additional specimens from the most flammable area. The burn times and visual observations for the 10 specimens determine the preliminary classification when:

(A) The average burn time is less than 4 seconds with no more than two base burns. The preliminary classification is Class 1, Normal Flammability; or

(B) The average burn time is less than 4 seconds with three or more base burns. The preliminary and final classification is Class 3, Rapid and Intense Burning; or

(C) The average burn time is greater than 7 seconds. The preliminary classification is Class 1, Normal Flammability; or

(D) The average burn time is 4–7 seconds (both inclusive), with no more than two base burns. The preliminary classification is Class 1, Normal Flammability; or

(E) The average burn time is 4–7 seconds (both inclusive), with three or more base burns. The preliminary classification is Class 2, Intermediate Flammability; or

(vi) If there is only one burn time out of the 10 specimens, the test is inconclusive. The fabric cannot be classified.

§ 1610.8 Reporting results.

(a) The reported result shall be the classification before or after refurbishing, whichever is the more severe; and based on this result, the textile shall be placed in the proper final classification as described in § 1610.4.

(b) Test result codes. The following are the definitions for the test result codes, which shall be used for recording flammability results for each specimen that is burned.

(1) For Plain Surface Textile Fabrics:

DNI Did not ignite.

IBE Ignited, but extinguished.

_._ sec. Actual burn time measured and recorded by the timing device.

(2) For Raised Surface Textile Fabrics:

SF uc Surface flash, under the stop thread, but does not break the stop thread.

SF pw Surface flash, part way. No time shown because the surface flash did not reach the stop thread.

SF poi Surface flash, at the point of impingement only (equivalent to ''did not ignite'' for plain surfaces).

_._ sec. Actual burn time measured by the timing device in 0.0 seconds.

_._ SF only Time in seconds, surface flash only. No damage to the base fabric.

_._ SFBB Time in seconds, surface flash base burn starting at places other

than the point of impingement as a result of surface flash.

_._ SFBB poi Time in seconds, surface flash base burn starting at the point of impingement.

_._ SFBB poi* Time in seconds, surface flash base burn possibly starting at the point of impingement. The asterisk is accompanied by the following statement: ''Unable to make absolute determination as to source of base burns.'' This statement is added to the result of any specimen if there is a question as to origin of the base burn.

Subpart B—Rules and Regulations

§ 1610.31 Definitions.

In addition to the definitions provided in section 2 of the Flammable Fabrics Act as amended (15 U.S.C. 1191), and in § 1610.2 of the Standard, the following definitions apply for this subpart.

(a) *Act* means the ''Flammable Fabrics Act'' (approved June 30, 1953, Pub. Law 88, 83d Congress, 1st sess., 15 U.S.C. 1191; 67 Stat. 111) as amended, 68 Stat. 770, August 23, 1954.

(b) Rule, rules, regulations, and rules and regulations, mean the rules and regulations prescribed by the Commission pursuant to section 5(c) of the act.

(c) United States means, the several States, the District of Columbia, the Commonwealth of Puerto Rico and the Territories, and Possessions of the United States.

(d) Marketing or handling means the transactions referred to in section 3 of the Flammable Fabrics Act, as amended in 1967.

(e) Test means the application of the relevant test method prescribed in the procedures provided under section 4(a) of the Act (16 CFR Part 1609).

(f) *Finish type* means a particular finish, but does not include such variables as changes in color, pattern, print, or design, or minor variations in the amount or type of ingredients in the finish formulation. Examples of finish types would be starch finishes, resin finishes or parchmentized finishes.

(g) *Uncovered or exposed part* means that part of an article of wearing apparel that might during normal wear be open to flame or other means of ignition. The outer surface of an undergarment is considered to be an uncovered or exposed part of an article of wearing apparel, and thus subject to the Act. Other examples of exposed parts of an article of wearing apparel subject to the Act include, but are not limited to:

(1) Linings, with exposed areas, such as full front zippered jackets;

(2) Sweatshirts with exposed raised fiber surface inside and capable of being worn napped side out;

(3) Unlined hoods;

(4) Rolled cuffs.

(h) *Coated fabrics* means a flexible material composed of a fabric and any adherent polymeric material applied to one or both surfaces.

§ 1610.32 General requirements.

No article of wearing apparel or fabric subject to the Act and regulations shall be marketed or handled if such article or fabric, when tested according to the procedures prescribed in section 4(a) of the Act (16 CFR 1609), is so highly flammable as to be dangerous when worn by individuals.

§ 1610.33 Test procedures for textile fabrics and film.

(a)(1) All textile fabrics (except those with a nitro-cellulose fiber, finish or coating) intended or sold for use in wearing apparel, and all such fabrics contained in articles of wearing apparel, shall be subject to the requirements of the Act, and shall be deemed to be so highly flammable as to be dangerous when worn by individuals if such fabrics or any uncovered or exposed part of such articles of wearing apparel exhibits rapid and intense burning when tested under the conditions and in the manner prescribed in subpart A of this part 1610.

(2) Notwithstanding the provisions of paragraph (a)(1) of this section, coated fabrics, except those with a nitro-cellulose coating, may be tested under the procedures outlined in part 1611, Standard for the Flammability of Vinyl Plastic Film, and if such coated fabrics do not exhibit a rate of burning in excess of that specified in § 1611.3 they shall not be deemed to be so highly flammable as to be dangerous when worn by individuals.

(b) All film, and textile fabrics with a nitro-cellulose fiber, finish or coating intended or sold for use in wearing apparel, and all film and such textile fabrics referred to in this rule which are contained in articles of wearing apparel, shall be subject to the requirements of the Act, and shall be deemed to be so highly flammable as to be dangerous when worn by individuals if such film or such textile fabrics or any uncovered or exposed part of such articles of wearing apparel exhibit a rate of burning in excess of that specified in part 1611, Standard for the Flammability of Vinyl Plastic Film.

§ 1610.34 Only uncovered or exposed parts of wearing apparel to be tested.

(a) In determining whether an article of wearing apparel is so highly flammable as to be dangerous when worn by individuals, only the uncovered or exposed part of such article of wearing apparel shall be tested according to the applicable procedures set forth in § 1610.6.

(b) If the outer layer of plastic film or plastic-coated fabric of a multilayer fabric separates readily from the other layers, the outer layer shall be tested under part 1611—Standard for the Flammability of Vinyl Plastic Film. If the outer layer adheres to all or a portion of one or more layers of the underlaying fabric, the multi-layered fabric may be tested under either part 1610—Standard for the Flammability of Clothing Textiles or part 1611. However, if the conditioning procedures required by § 1610.6(a)(2)(iv) and § 1610.6(a)(3)(v) would damage or alter the physical characteristics of the film or coating, the uncovered or exposed layer shall be tested in accordance with part 1611.

(c) Plastic film or plastic-coated fabric used, or intended for use as the outer layer of disposable diapers is exempt from the requirements of the Standard, provided that a sample taken from a full thickness of the assembled article passes the test in the Standard (part 1610 or part 1611) otherwise applicable to the outer fabric or film when the flame is applied to the exposed or uncovered surface. See § 1610.36(f) and § 1611.36(f).

§ 1610.35 Procedures for testing special types of textile fabrics under the standard.

(a) *Fabric not customarily washed or dry cleaned.* (1) Except as provided in paragraph (a)(2) of this section, any textile fabric or article of wearing apparel which, in its normal and customary use as wearing apparel would not be dry cleaned or washed, need not be dry cleaned or washed as prescribed in § 1610.6(b) when tested under the Standard if such fabric or article of wearing apparel, when marketed or handled, is marked in a clear and legible manner with the statement: ''Fabric may be dangerously flammable if dry cleaned or washed.'' An example of the type of fabric referred to in this paragraph is bridal illusion.

(2) Section 1610.3, which requires that all textiles shall be refurbished before testing, shall not apply to disposable fabrics and garments. Additionally, such disposable fabrics and garments shall not be subject to the labeling requirements set forth in paragraph (a)(1) of this section.

(b) A coated fabric need not, upon test under the procedures outlined in subpart A of part 1610, be dry cleaned as set forth in § 1610.6(b)(1)(i).

(c) In determining whether a textile fabric having a raised-fiber surface, which surface is to be used in the covered or unexposed parts of articles of wearing apparel, is so highly flammable as to be dangerous when worn by individuals, only the opposite surface or surface intended to be exposed need be tested under the applicable procedures set forth in § 1610.6, providing an invoice or other paper covering the marketing or handling of such fabric is given which clearly designates that the raised-fiber surface is to be used only in the covered or unexposed parts of articles of wearing apparel.

§ 1610.36 Application of Act to particular types of products.

(a) *Interlinings*. Fabrics intended or sold for processing into interlinings or other covered or unexposed parts of articles of wearing apparel shall not be subject to the provisions of section 3 of the Act: *Provided*, that an invoice or other paper covering the marketing or handling of such fabrics is given which specifically designates their intended end use: *And provided further*, that with respect to fabrics which under the provisions of section 4 of the Act, as amended, are so highly flammable as to be dangerous when worn by individuals, any person marketing or handling such fabrics maintains records which show the acquisition, disposition and intended end use of such fabrics, and any person manufacturing articles of wearing apparel containing such fabrics maintains records which show the acquisition, and use and disposition of such fabrics. Any person who fails to maintain such records or to furnish such invoice or other paper shall be deemed to have engaged in the marketing or handling of such products for purposes subject to the requirements of the Act and such person and the products shall be subject to the provisions of sections 3, 6, 7, and 9 of the Act.

(b) *Hats, gloves, and footwear*. Fabrics intended or sold for use in those hats, gloves, and footwear which are excluded under the definition of articles of wearing apparel in section 2(d) of the Act shall not be subject to the provisions of section 3 of the Act: *Provided*, that an invoice or other paper covering the marketing or handling of such fabrics is given which specifically designates their intended use in such products: *And provided further*, that with respect to fabrics which under the provisions of section 4 of the Act, as amended, are so highly flammable as to be dangerous when worn by individuals, any person marketing or handling such fabrics maintains records which show the acquisition, disposition, and intended end use of such fabrics, and any person manufacturing hats, gloves, or footwear containing such fabrics maintains records which show the acquisition, end use and disposition of such fabrics. Any person who fails to maintain such records or to furnish such invoice or other paper shall be deemed to have engaged in the marketing or handling of such products for purposes subject to the requirements of the Act and such person and the products shall be subject to the provisions of sections 3, 6, 7, and 9 of the Act.

(c) *Veils and hats*. (1) Ornamental millinery veils or veilings when used as a part of, in conjunction with, or as a hat, are not to be considered such a ''covering for the neck, face, or shoulders'' as would, under the first proviso of section 2(d) of the Act, cause the hat to be included within the definition of the term ''article of wearing apparel'' where such ornamental millinery veils or veilings do not extend more than nine (9) inches from the tip of the crown of the hat to which they are attached and do not extend more than two (2) inches beyond the edge of the brim of the hat.

(2) Where hats are composed entirely of ornamental millinery veils or veilings such hats will not be considered as subject to the Act if the veils or veilings from which they are manufactured were not more than nine (9) inches in width and do not extend more than nine (9) inches from the tip of the crown of the completed hat.

(d) *Handkerchiefs*. (1) Except as provided in paragraph (d)(2) of this section, handkerchiefs not exceeding a finished size of twenty-four (24) inches on any side or not exceeding five hundred seventy-six (576) square inches in area are not deemed ''articles of wearing apparel'' as that term is used in the Act.

(2) Handkerchiefs or other articles affixed to, incorporated in, or sold as a part of articles of wearing apparel as decoration, trimming, or for any other purpose, are considered an integral part of such articles of wearing apparel, and the articles of wearing apparel and all parts thereof are subject to the provisions of the Act. Handkerchiefs or other articles intended or sold to be affixed to, incorporated in or sold as a part of articles of wearing apparel as aforesaid constitute ''fabric'' as that term is defined in section 2(e) of the Act and are subject to the provisions of the Act, such handkerchiefs or other articles constitute textile fabrics as the term ''textile fabric'' is defined in § 1610.2(r).

(3) If, because of construction, design, color, type of fabric, or any other factor, a piece of cloth of a finished type or any other product of a finished type appears to be likely to be used as a covering for the head, neck, face, shoulders, or any part thereof, or otherwise appears likely to be used as an article of clothing, garment, such product is not a handkerchief and constitutes an article of wearing apparel as defined in and subject to the provisions of the Act, irrespective of its size, or its description or designation as a handkerchief or any other term.

(e) *Raised-fiber surface wearing apparel*. Where an article of wearing apparel has a raised-fiber surface which is intended for use as a covered or unexposed part of the article of wearing apparel but the article of wearing apparel is, because of its design and construction, capable of being worn with the raised-fiber surface exposed, such raised-fiber surface shall be considered to be an uncovered or exposed part of the article of wearing apparel. Examples of the type of products referred to in this paragraph are athletic shirts or so-called ''sweat shirts'' with a raised-fiber inner side.

(f) *Multilayer fabric and wearing apparel with a film or coating on the uncovered or exposed surface*. Plastic film or plastic-coated fabric used, or intended for use, as the outer layer of disposable diapers is exempt from the requirements of the standard, provided that a full thickness of the assembled article passes the test in the Standard otherwise applicable to the outer fabric or film when the flame is applied to the exposed or uncovered surface.

§ 1610.37 Reasonable and representative tests to support guaranties.

(a) *Purpose*. The purpose of this § 1610.37 is to establish requirements for reasonable and representative tests to support initial guaranties of products, fabrics, and related materials which are subject to the Standard for the Flammability of Clothing Textiles (the Standard, 16 CFR part 1610).

(b) *Statutory provisions*. (1) Section 8(a) of the Act (15 U.S.C. 1197(a)) provides that no person shall be subject to criminal prosecution under section 7 of the Act (15 U.S.C. 1196) for a violation of section 3 of the Act (15 U.S.C. 1192) if such person establishes a guaranty received in good faith to the effect that the product, fabric, or related material complies with the applicable flammability standard. A guaranty does not provide the holder any defense to an administrative action for an order to cease and desist from violation of the applicable standard, the Act, and the Federal Trade Commission Act (15 U.S.C. 45), nor to any civil action for

injunction or seizure brought under section 6 of the Act (15 U.S.C. 1195).

(2) Section 8 of the Act provides for two types of guaranties:

(i) An initial guaranty based on ''reasonable and representative tests'' made in accordance with the applicable standard issued under the Act; and

(ii) A guaranty based on a previous guaranty, received in good faith, to the effect that reasonable and representative tests show conformance with the applicable standard.

(c) *Requirements.* (1) Each person or firm issuing an initial guaranty of a product, fabric, or related material subject to the Standard shall devise and implement a program of reasonable and representative tests to support such a guaranty.

(2) The term program of reasonable and representative tests as used in this § 1610.37 means at least one test with results demonstrating conformance with the Standard for the product, fabric or related material which is the subject of an initial guaranty. The program of reasonable and representative tests required by this § 1610.37 may include tests performed before the effective date of this section, and may include tests performed by persons or firms outside of the territories of the United States or other than the one issuing the initial guaranty. The number of tests and the frequency of testing shall be left to the discretion of the person or firm issuing the initial guaranty.

(3) In the case of an initial guaranty of a fabric or related material, a program of reasonable and representative tests may consist of one or more tests of the particular fabric or related material which is the subject of the guaranty, or of a fabric or related material of the same ''class'' of fabrics or related materials as the one which is the subject of the guaranty. For purposes of this § 1610.37, the term class means a category of fabrics or related materials having general constructional or finished characteristics, sometimes in association with a particular fiber, and covered by a class or type description generally recognized in the trade.

§ 1610.38 Maintenance of records by those furnishing guaranties.

(a) Any person or firm issuing an initial guaranty of a product, fabric, or related material which is subject to the Standard for the Flammability of Clothing Textiles (the Standard, 16 CFR part 1610) shall keep and maintain a record of the test or tests relied upon to support that guaranty. The records to be maintained shall show:

(1) The style or range number, fiber composition, construction and finish type of each textile fabric or related material covered by an initial guaranty; or the identification, fiber composition, construction and finish type of each textile fabric (including those with a nitrocellulose fiber, finish or coating), and of each related material, used or contained in a product of wearing apparel covered by an initial guaranty.

(2) The results of the actual test or tests made of the textile fabric or related material covered by an initial guaranty; or of any fabric or related material used in the product of wearing apparel covered by an initial guaranty.

(3) When the person or firm issuing an initial guaranty has conducted the test or tests relied upon to support that guaranty, that person or firm shall also include with the information required by paragraphs (a) (1) and (2) of this section, a sample of each fabric or related material which has been tested.

(b) Persons furnishing guaranties based upon class tests shall maintain records showing:

(1) Identification of the class test.

(2) Fiber composition, construction and finish type of the fabrics, or the fabrics used or contained in articles of wearing apparel so guaranteed.

(3) A swatch of each class of fabrics guaranteed.

(c) Persons furnishing guaranties based upon guaranties received by them shall maintain records showing the guaranty received and identification of the fabrics or fabrics contained in articles of wearing apparel guaranteed in turn by them.

(d) The records referred to in this section shall be preserved for a period of 3 years from the date the tests were performed, or in the case of paragraph (c) of this section from the date the guaranties were furnished.

(e) Any person furnishing a guaranty under section 8(a) of the Act who neglects or refuses to maintain and preserve the records prescribed in this section shall be deemed to have furnished a false guaranty under the provisions of section 8(b) of the Act.

§ 1610.39 Shipments under section 11(c) of the Act.

(a) The invoice or other paper relating to the shipment or delivery for shipment in commerce of articles of wearing apparel or textile fabrics for the purpose of finishing or processing to render them not so highly flammable as to be dangerous when worn by individuals, shall contain a statement disclosing such purpose.

(b) An article of wearing apparel or textile fabric shall not be deemed to fall within the provisions of section 11(c) of the Act as being shipped or delivered for shipment in commerce for the purpose of finishing or processing to render such article of wearing apparel or textile fabric not so highly flammable under section 4 of the Act, as to be dangerous when worn by individuals, unless the shipment or delivery for shipment in commerce of such article of wearing apparel or textile fabric is made directly to the person engaged in the business of processing or finishing textile products for the prearranged purpose of having such article of apparel or textile fabric processed or finished to render it not so highly flammable under section 4 of the Act, as to be dangerous when worn by individuals, and any person shipping or delivering for shipment the article of wearing apparel or fabric in commerce for such purpose maintains records which establish that the textile fabric or article of wearing apparel has been shipped for appropriate flammability treatment, and that such treatment has been completed, as well as records to show the disposition of such textile fabric or article of wearing apparel subsequent to the completion of such treatment.

(c) The importation of textile fabrics or articles of wearing apparel may be considered as incidental to a transaction involving shipment or delivery for shipment for the purpose of rendering such textile fabrics or articles of wearing apparel not so highly flammable under the provisions of section 4 of the Act, as to be dangerous when worn by individuals, if:

(1) The importer maintains records which establish that: (i) The imported textile fabrics or articles of wearing apparel have been shipped for appropriate flammability treatment, and

(ii) Such treatment has been completed, as well as records to show the disposition of such textile fabrics or articles of wearing apparel subsequent to the completion of such treatment.

(2) The importer, at the time of importation, executes and furnishes to the U.S. Customs and Border Protection an affidavit stating: These fabrics (or articles of wearing apparel) are dangerously flammable under the provisions of section 4 of the Act, and will not be sold or used in their present condition but will be processed or finished by the undersigned or by a duly authorized agent so as to render them not so highly flammable under the provisions of section 4 of the Flammable Fabrics Act, as to be dangerously flammable when worn by individuals. The importer agrees to maintain the records required by 16 CFR 1610.39(c)(1).

(3) The importer, if requested to do so by the U.S. Customs and Border Protection, furnishes an adequate specific-performance bond conditioned upon the complete discharge of the obligations assumed in paragraphs (c)(1) and (2) of this section.

(d) The purpose of section 11(c) of the Act is only to permit articles of wearing apparel or textile fabrics which are dangerously flammable to be shipped or delivered for shipment in commerce for the purpose of treatment or processing to render them not dangerously flammable. Section 11(c)of the Act does not in any other respect limit the force and effect of sections 3, 6, 7, and 9 of the Act. In particular, section 11(c) of the Act does not authorize the sale or offering for sale of any article of wearing apparel or textile fabric which is in fact dangerously flammable at the time of sale or offering for sale, even though the seller intends to ship the article for treatment prior to delivery to the purchaser or has already done so. Moreover, under section 3 of the Act a person is liable for a subsequent sale or offering for sale if, despite the purported completion of treatment to render it not dangerously flammable, the article in fact remains dangerously flammable.

§ 1610.40 Use of alternate apparatus, procedures, or criteria for tests for guaranty purposes.

(a) Section 8(a) of the Act provides that no person shall be subject to criminal prosecution under section 7 of the Act (15 U.S.C. 1196) for a violation of section 3 of the Act (15 U.S.C. 1192) if that person establishes a guaranty received in good faith which meets all requirements set forth in section 8 the Act. One of those requirements is that the guaranty must be based upon ''reasonable and representative tests'' in accordance with the applicable standard.

(b) Subpart A of this part 1610 prescribes apparatus and procedures for testing fabrics and garments subject to its provisions. See §§ 1610.5 & 1610.6. Subpart A prescribes criteria for classifying the flammability of fabrics and garments subject to its provisions as ''Normal flammability, Class 1,'' ''Intermediate flammability, Class 2,'' and ''Rapid and Intense Burning, Class 3.'' See § 1610.4. Sections 3 and 4 of the Act prohibit the manufacture for sale, importation into the United States, or introduction in commerce of any fabric or article of wearing apparel subject to the Standard which exhibits ''rapid and intense burning'' when tested in accordance with the Standard. See 16 CFR part 1609.

(c) The Commission recognizes that for purposes of supporting guaranties, ''reasonable and representative tests'' could be either the test in Subpart A of this part, or alternate tests which utilize apparatus or procedures other than those in Subpart A of this part. This § 1610.40 sets forth conditions under which the Commission will allow use of alternate tests with apparatus or procedures other than those in Subpart A of this part to serve as the basis for guaranties.

(d)(1) Persons and firms issuing guaranties that fabrics or garments subject to the Standard meet its requirements may base those guaranties on any alternate test utilizing apparatus or procedures other than those in Subpart A of this part, if such alternate test is as stringent as, or more stringent than, the test in Subpart A of this part. The Commission considers an alternate test to be ''as stringent as, or more stringent than'' the test in Subpart A of this part if, when testing identical specimens, the alternate test yields failing results as often as, or more often than, the test in Subpart A of this part. Any person using such an alternate test must have data or information to demonstrate that the alternate test is as stringent as, or more stringent than, the test in Subpart A of this part.

(2) The data or information required by this paragraph (d) of this section to demonstrate equivalent or greater stringency of any alternate test using apparatus or procedures other than those in Subpart A of this part must be in the possession of the person or firm desiring to use such alternate test before the alternate test may be used to support guaranties of items subject to the Standard.

(3) The data or information required by paragraph (d) of this section to demonstrate equivalent or greater stringency of any alternate test using apparatus or procedures other than those in Subpart A of this part must be retained for as long as that alternate test is used to support guaranties of items subject to the Standard, and for one year thereafter.

(e) Specific approval from the Commission in advance of the use of any alternate test using apparatus or procedures other than those in Subpart A is not required. The Commission will not approve or disapprove any specific alternate test utilizing apparatus or procedures other than those in Subpart A of this part.

(f) Use of any alternate test to support guaranties of items subject to the Standard without the information required by this section may result in violation of section 8(b), of the Act (15 U.S.C. 1197(b)), which prohibits the furnishing of a false guaranty.

(g) The Commission will test fabrics and garments subject to the Standard for compliance with the Standard using the apparatus and procedures set forth in Subpart A of this part. The Commission will consider any failing results from compliance testing as evidence that:

(1) The manufacture for sale, importation into the United States, or introduction in commerce of the fabric or garment which yielded failing results was in violation of the Standard and of section 3 of the Act; and

(2) The person or firm using the alternate test as the basis for a guaranty has furnished a false guaranty, in violation of section 8(b) of the Act. (Reporting requirements contained in paragraph (d) were approved by Office of Management and Budget under control number 3041–0024.)

Subpart C—Interpretations and Policies

§ 1610.61 Reasonable and representative testing to assure compliance with the standard for the clothing textiles.

(a) *Background.* (1) The CPSC administers the Flammable Fabrics Act (''the Act''), 15 U.S.C. 1191–1204. Under the Act, among other things, the Commission enforces the Standard for the Flammability of Clothing Textiles (''the Standard''), 16 CFR part 1610. That Standard establishes requirements for the flammability of clothing and textiles intended to be used for clothing (hereinafter ''textiles'').

(2) The Standard applies both to fabrics and finished garments. The Standard provides methods of testing the flammability of textiles, and sets forth the requirements that textiles must meet to be classified into one of three classes of flammability (classes 1, 2 and 3). § 1610.4. Class 1 textiles, those that exhibit normal flammability, are acceptable for use in clothing. § 1610.4(a)(1) & (2). Class 2 textiles, applicable only to raised-fiber surfaces, are considered to be of intermediate flammability, but may be used in clothing. § 1610.4(b)(1) & (2). Finally, Class 3 textiles, those that exhibit rapid and intense burning, are dangerously flammable and may not be used in clothing. § 1610.4(c)(1) & (2). The manufacture for sale, offering for sale, importation into the U.S., and introduction or delivery for introduction of Class 3 articles of wearing apparel are among the acts prohibited by section 3(a) of the Act, 15 U.S.C. 1192(a).

(3) CPSC currently uses retail surveillance, attends appropriate trade shows, follows up on reports of

noncompliance and previous violations, and works with U.S. Customs and Border Protection in an effort to find textiles that violate CPSC's standards. The Commission has a number of enforcement options to address prohibited acts. These include bringing seizure actions in federal district court against violative textiles, seeking an order through an administrative proceeding that a firm cease and desist from selling violative garments, pursuing criminal penalties, or seeking the imposition of civil penalties for ''knowing'' violations of the Act. Of particular relevance to the latter two remedies is whether reasonable and representative tests were performed demonstrating that a textile or garment meets the flammability standards for general wearing apparel. Persons who willfully violate flammability standards are subject to criminal penalties.

(4) Section 8(a) of the Act, 15 U.S.C. 1197(a), exempts a firm from the imposition of criminal penalties if the firm establishes that a guaranty was received in good faith signed by and containing the name and address of the person who manufactured the guarantied wearing apparel or textiles or from whom the apparel or textiles were received. A guaranty issued by a person who is not a resident of the United States may not be relied upon as a bar to prosecution. 16 CFR 1608.4. The guaranty must be based on the exempted types of fabrics or on reasonable and representative tests showing that the fabric covered by the guaranty or used in the wearing apparel covered by the guaranty is not so highly flammable as to be dangerous when worn by individuals, i.e., is not a Class 3 material. (The person proffering a guaranty to the Commission must also not, by further processing, have affected the flammability of the fabric, related material or product covered by the guaranty that was received.) Under § 1610.37, a person, to issue a guaranty, should first evaluate the type of fabric to determine if it meets testing exemptions in accordance with § 1610.1(d). (Some textiles never exhibit unusual burning characteristics and need not be tested.)

§ 1610.1(d). Such textiles include plain surface fabrics, regardless of fiber content, weighing 2.6 oz. or more per sq. yd., and plain and raised surface fabrics made of acrylic, modacrylic, nylon, olefin, polyester, wool, or any combination of these fibers, regardless of weight.) If no exemptions apply, the person issuing the guaranty must devise and implement a program of reasonable and representative tests to support the guaranty. The number of tests and frequency of testing is left to the discretion of that person, but at least one test is required.

(5) In determining whether a firm has committed a ''knowing'' violation of a flammability standard that warrants imposition of a civil penalty, the CPSC considers whether the firm had actual knowledge that its products violated the flammability requirements. The CPSC also considers whether the firm should be presumed to have the knowledge that would be possessed by a reasonable person acting in the circumstances, including knowledge that would have been obtainable upon the exercise of due care to ascertain the truth of representations. 15 U.S.C. 1194(e). The existence of results of flammability testing based on a reasonable and representative program and, in the case of tests performed by another entity (such as a guarantor), the steps, if any, that the firm took to verify the existence and reliability of such tests, bear directly on whether the firm acted reasonably in the circumstances.

(b) *Applicability.* (1) When tested for flammability, a small number of textile products exhibit variability in the test results; that is, even though they may exhibit Class 1 or Class 2 burning characteristics in one test, a third test may result in a Class 3 failure. Violative products that the Commission has discovered between 1994 and 1998 include sheer 100% rayon skirts and scarves; sheer 100% silk scarves; 100% rayon chenille sweaters; rayon/nylon chenille and long hair sweaters; polyester/cotton and 100% cotton fleece/sherpa garments, and 100% cotton terry cloth robes. Between August 1994 and August 1998, there have been 21 recalls of such dangerously flammable clothing, and six retailers have paid civil penalties to settle Commission staff allegations that they knowingly sold garments that violated the general wearing apparel standard.

(2) The violations and resulting recalls and civil penalties demonstrate the critical necessity for manufacturers, distributors, importers, and retailers to evaluate, prior to sale, the flammability of garments made from the materials described above, or to seek appropriate guaranties that assure that the garments comply. Because of the likelihood of variable flammability in the small group of textiles identified above, one test is insufficient to assure reasonably that these products comply with the flammability standards. Rather, a person seeking to evaluate garments made of such materials should assure that the program tests a sufficient number of samples to provide adequate assurance that such textile products comply with the general wearing apparel standard. The number of samples to be tested, and the corresponding degree of confidence that products tested will comply, are to be specified by the individual designing the test program. However, in assessing the reasonableness of a test program, the Commission staff will specifically consider the degree of confidence that the program provides.

(c) *Suggestions.* The following are some suggestions to assist in complying with the Standard:

(1) Purchase fabrics or garments that meet testing exemptions listed in § 1610.1(d). (If buyers or other personnel do not have skills to determine if the fabric is exempted, hire a textile consultant or a test lab for an evaluation.)

(2) For fabrics that are not exempt, conduct reasonable and representative testing before cutting and sewing, using standard operating characteristic curves for acceptance sampling to determine a sufficient number of tests.

(3) Purchase fabrics or garments that have been guarantied and/or tested by the supplier using a reasonable and representative test program that uses standard operating characteristic curves for acceptance sampling to determine a sufficient number of tests. Firms should also receive and maintain a copy of the guaranty.

(4) Periodically verify that your suppliers are actually conducting appropriate testing.

BILLING CODE 6355–01–P

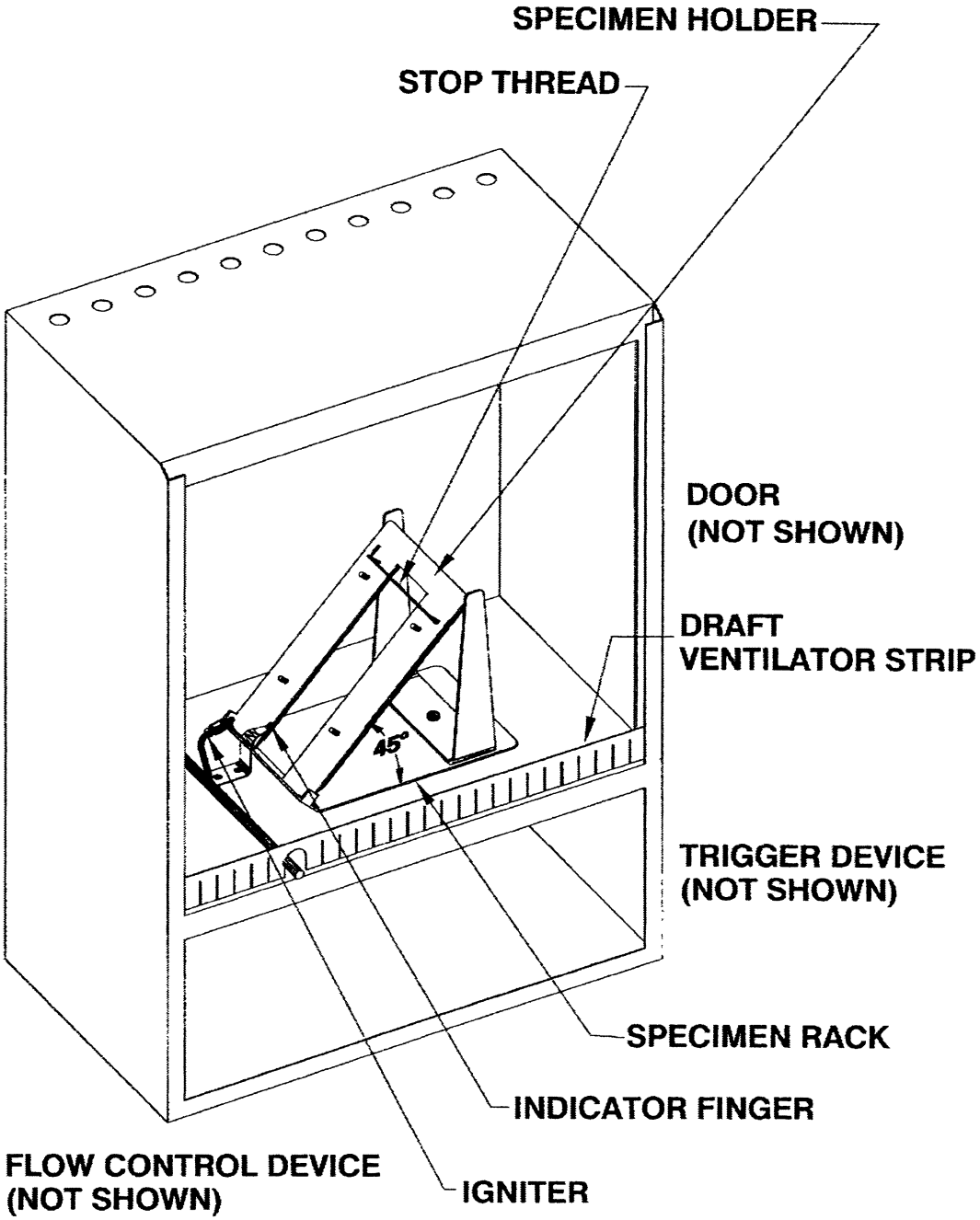

SKETCH OF FLAMMABILITY APPARATUS

FIGURE 1

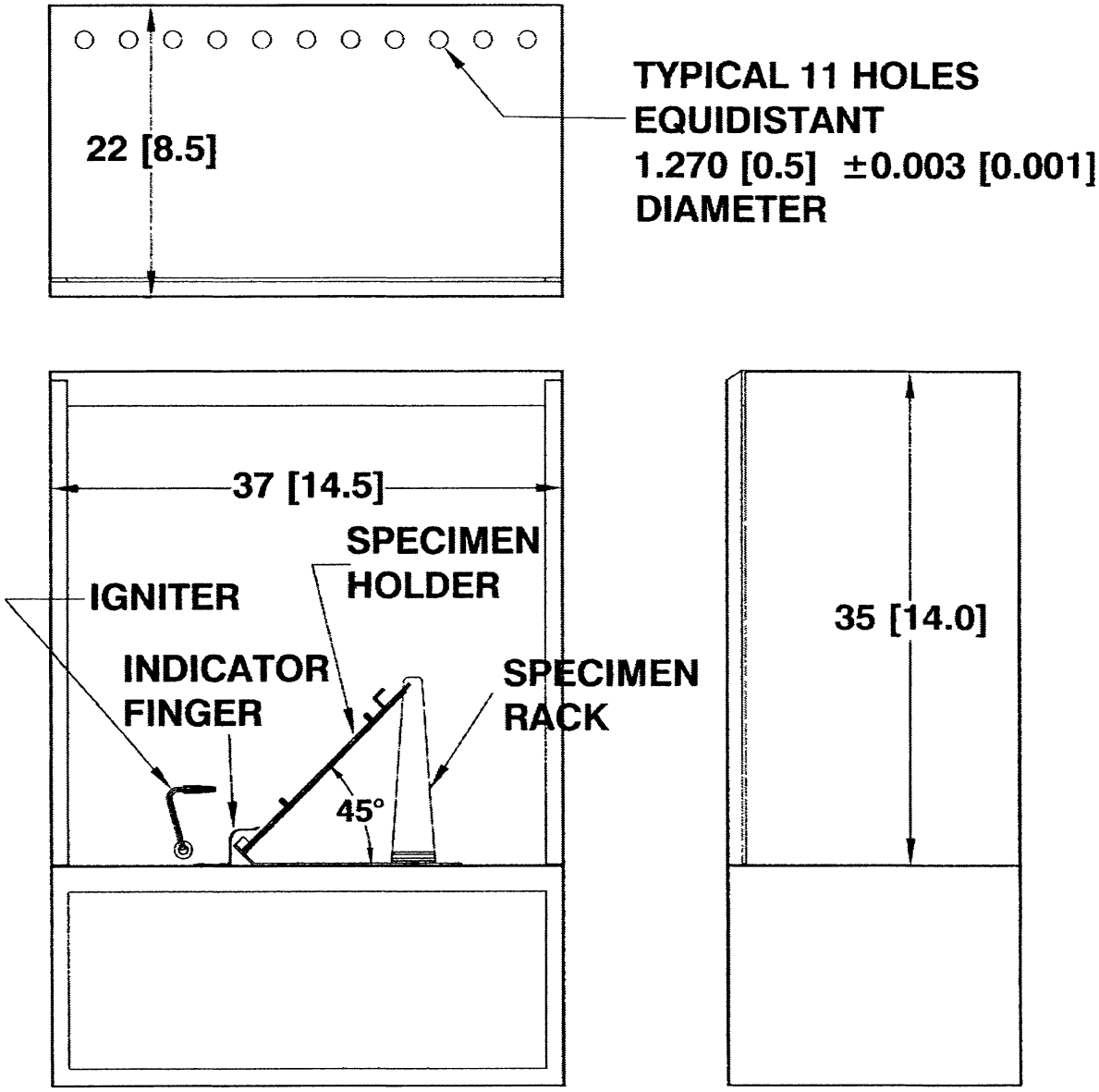

NOTE: DIMENSIONS IN
CENTIMETERS [INCHES]
TOLERANCE ± 1 CM [0.375]
UNLESS OTHERWISE NOTED

FLAMMABILITY APPARATUS VIEWS
FIGURE 2

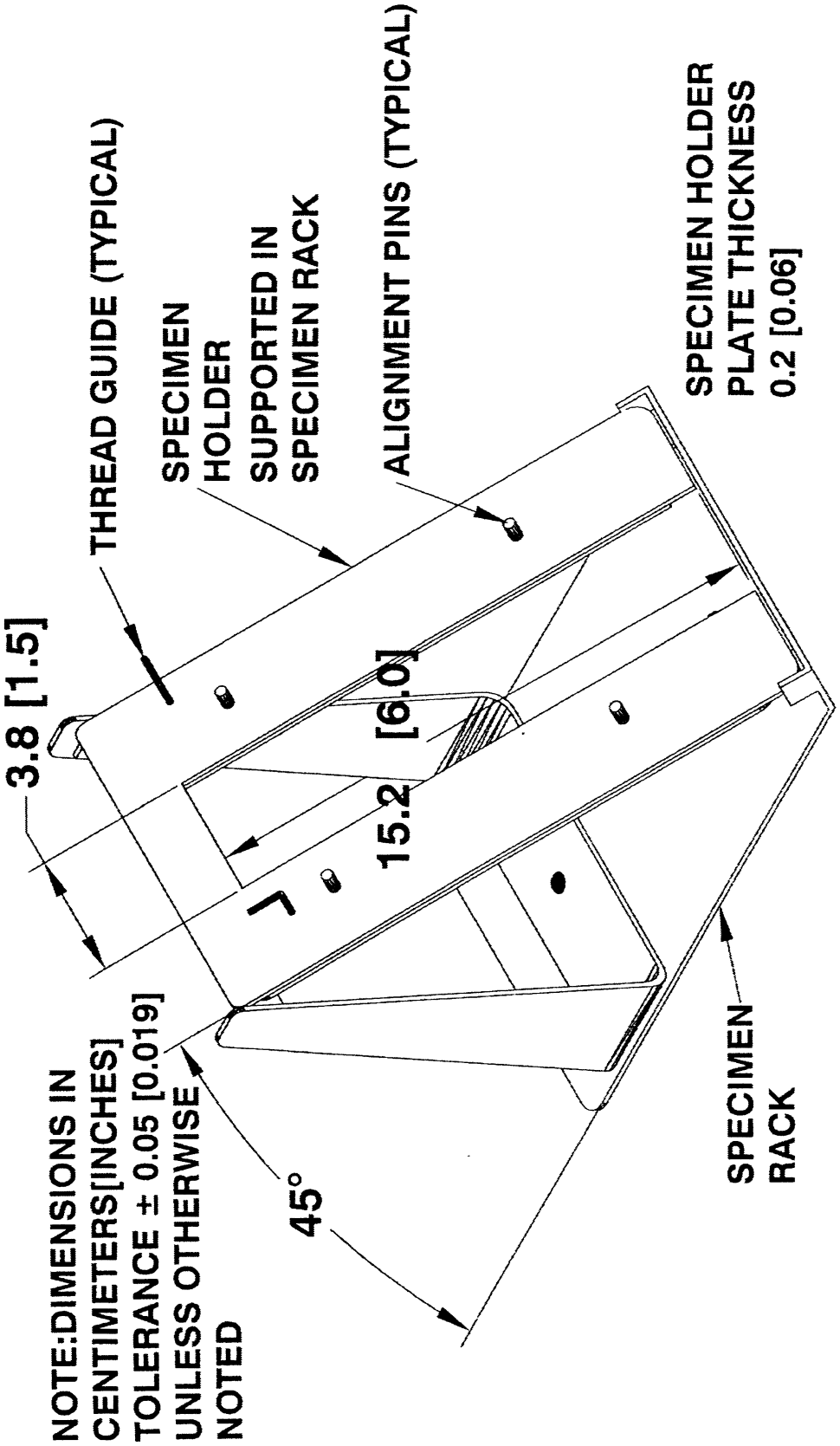

SPECIMEN HOLDER SUPPORTED IN SPECIMEN RACK
FIGURE 3

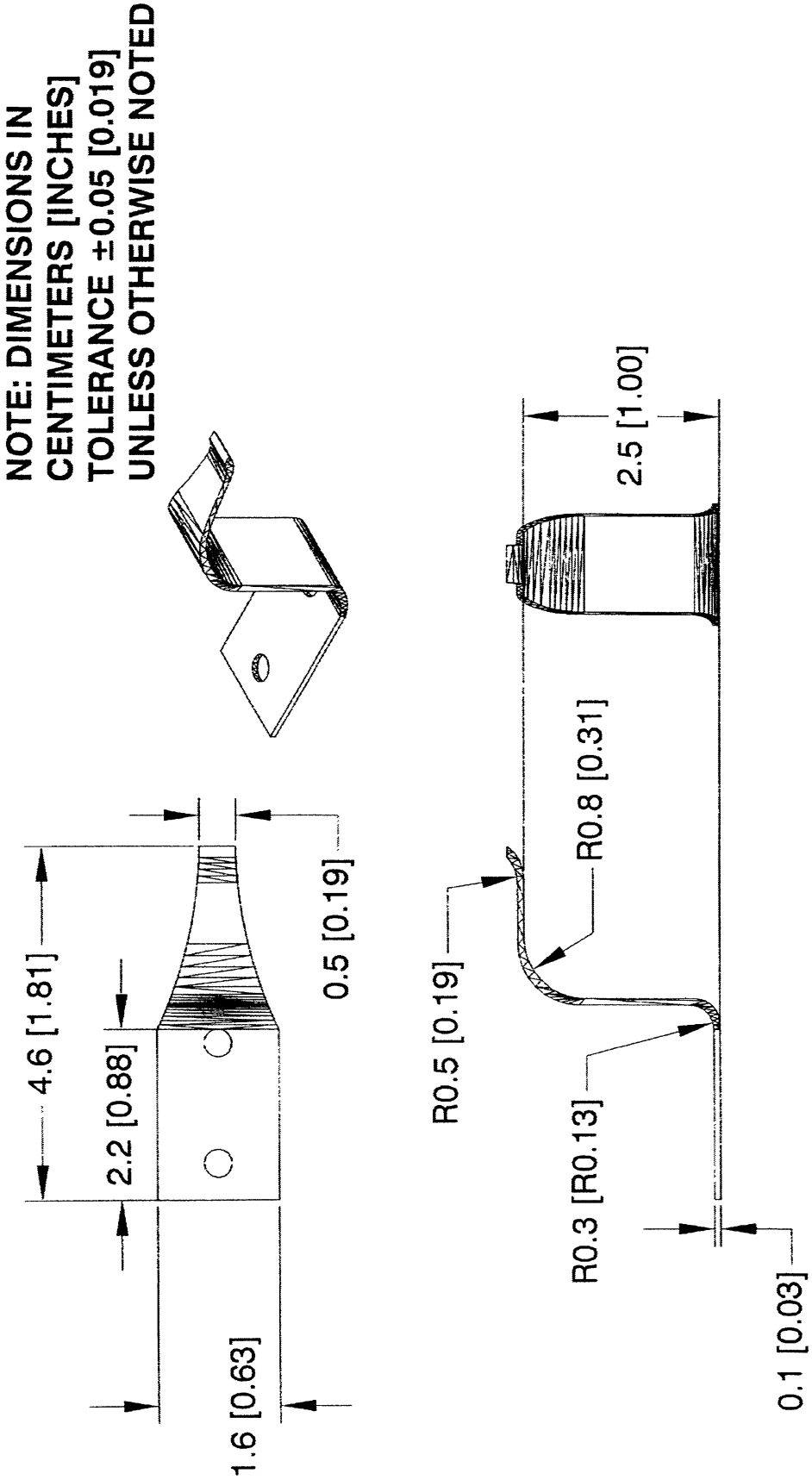

AN EXAMPLE OF A TYPICAL INDICATOR FINGER

FIGURE 4

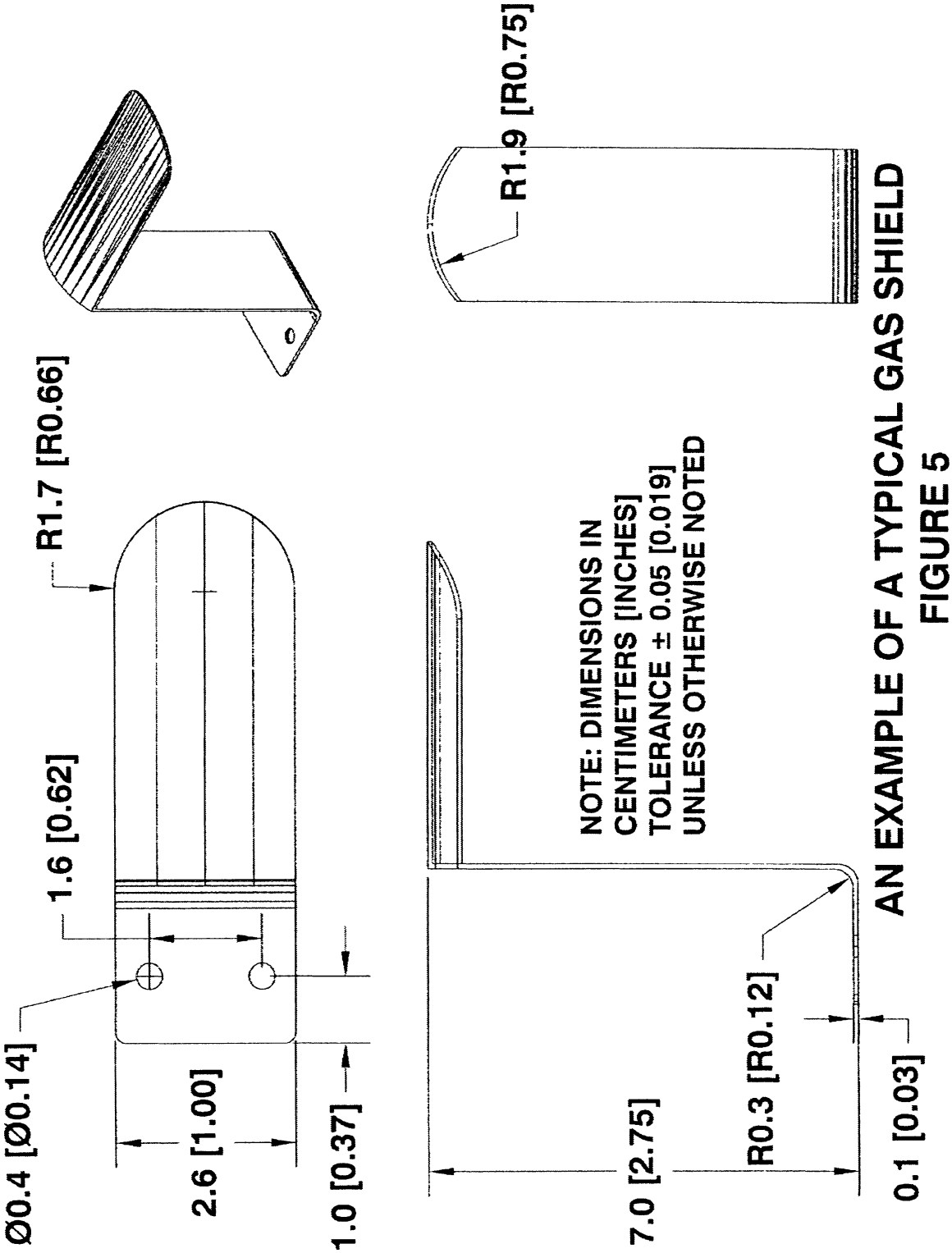

AN EXAMPLE OF A TYPICAL GAS SHIELD
FIGURE 5

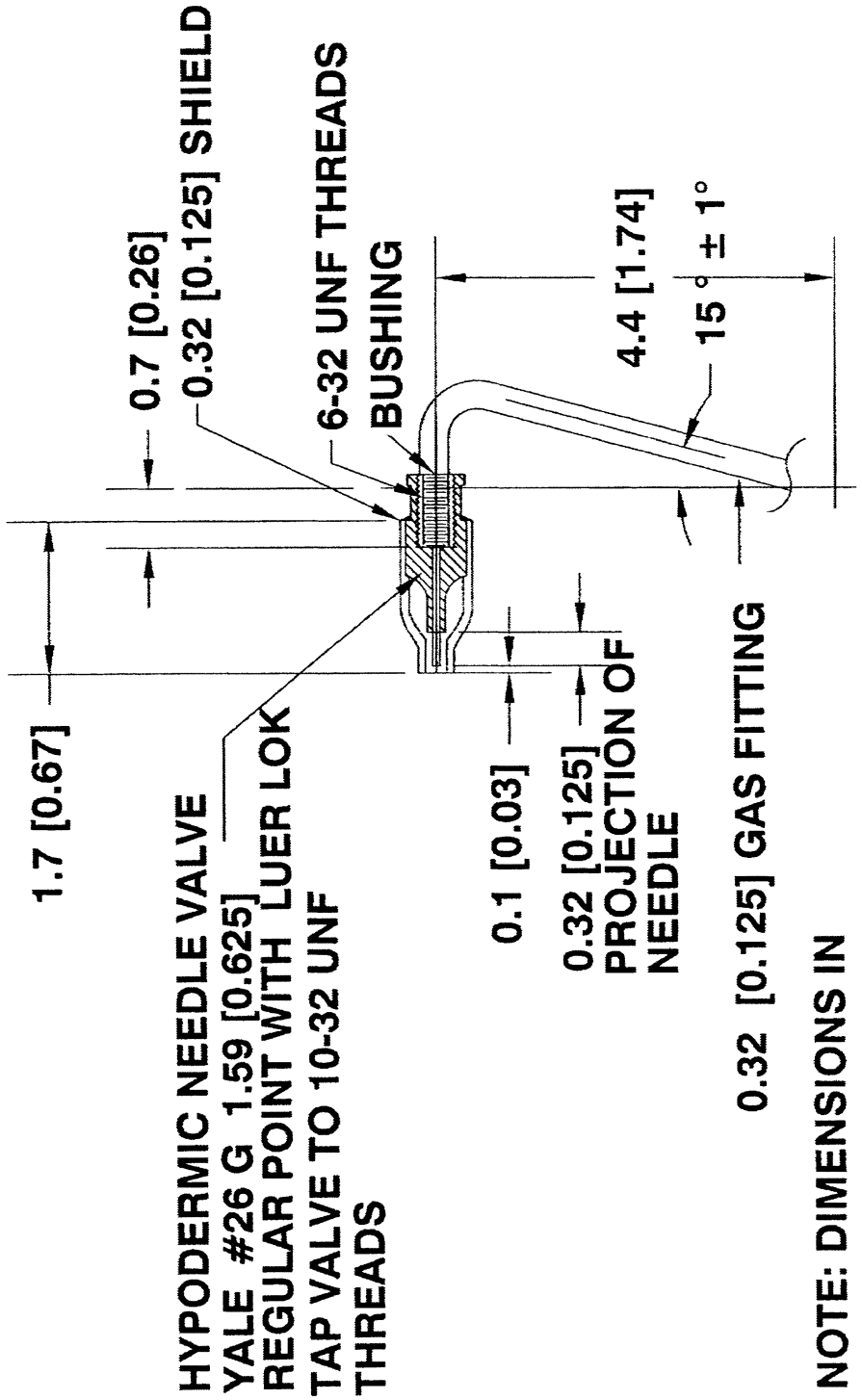

IGNITER
FIGURE 6

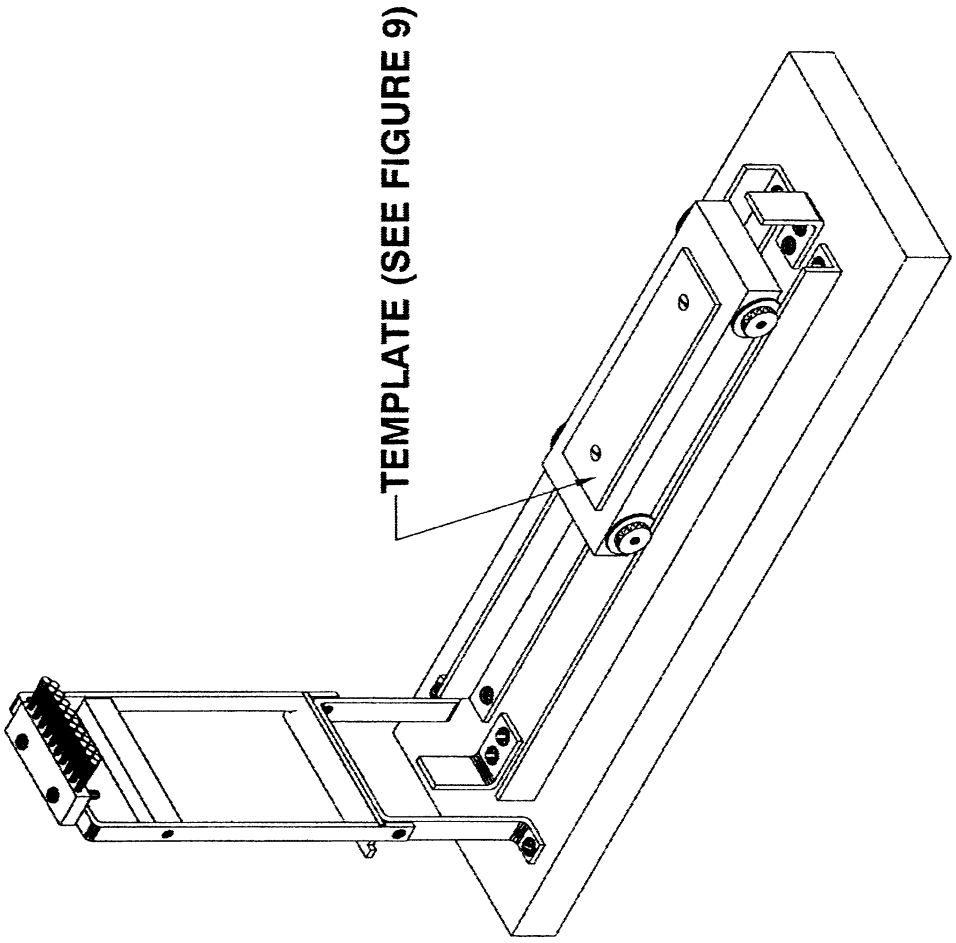

BRUSHING DEVICE
FIGURE 7

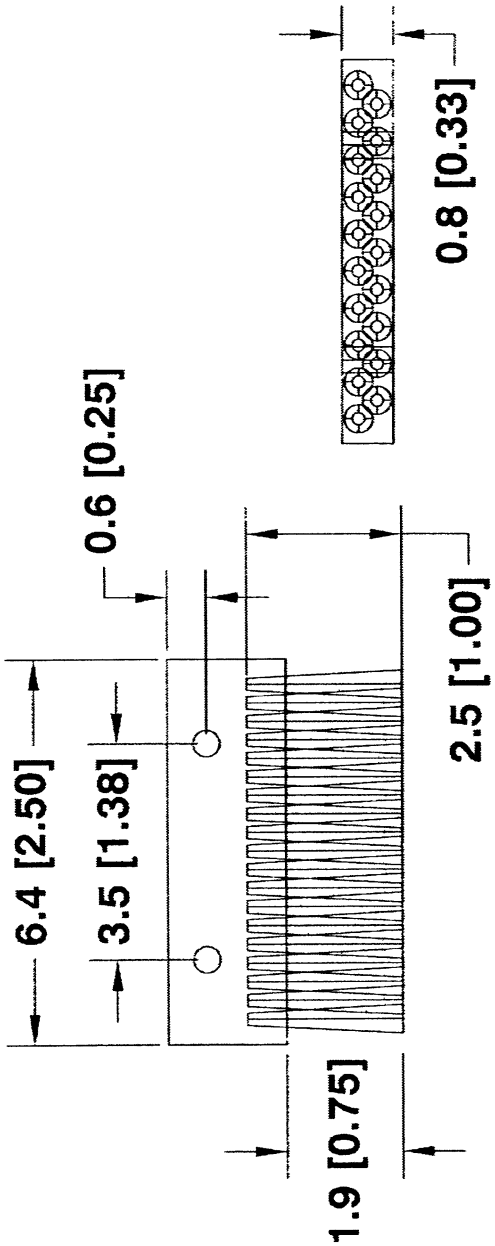

BRUSH CONSISTS OF NYLON BRISTLES
0.004 [0.016] DIAMETER ± 0.001 [0.004]
20 BRISTLES PER TUFT AND 4 TUFTS PER INCH

NOTE: DIMENSIONS IN
CENTIMETERS [INCHES]
TOLERANCE ±0.05 [0.019]
UNLESS OTHERWISE NOTED

BRUSH
FIGURE 8

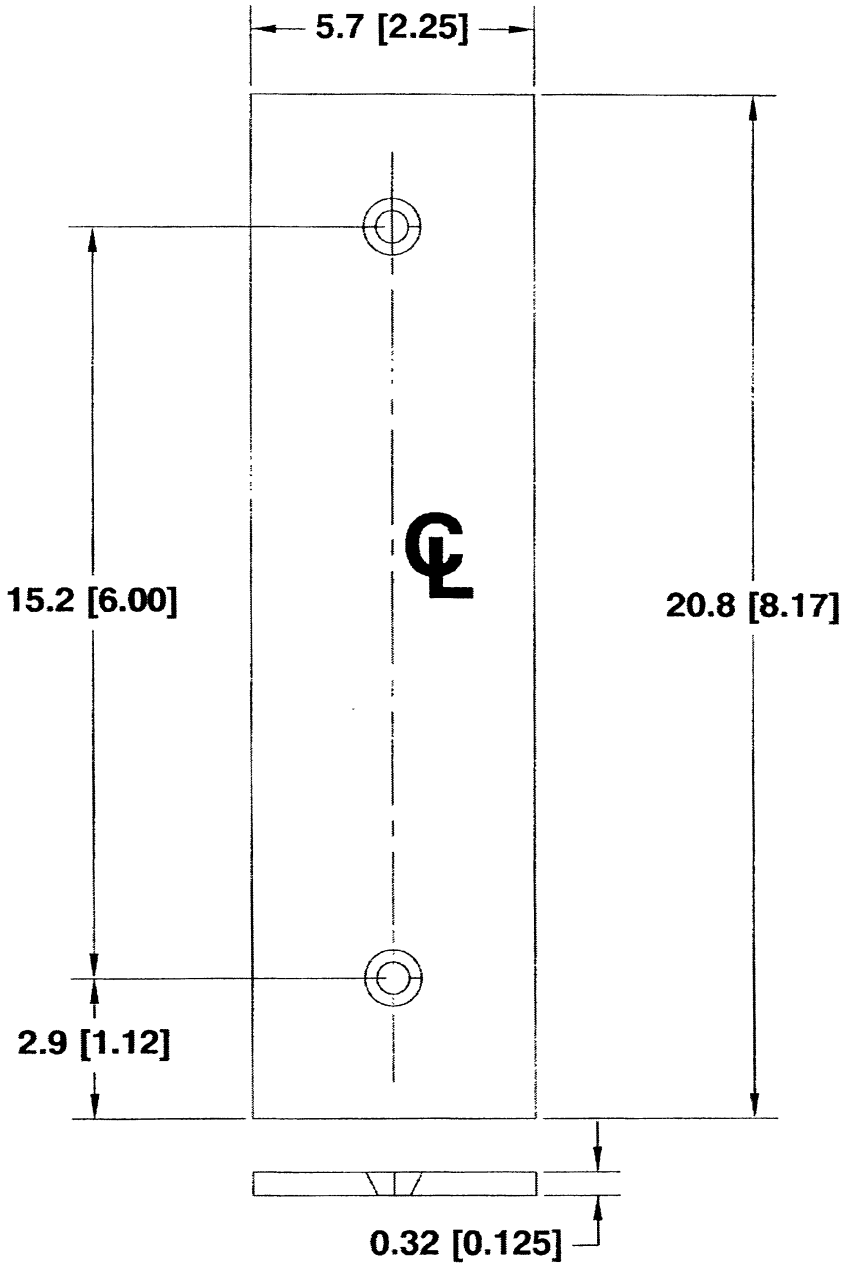

NOTES:

1. TWO HOLES Ø 0.16 [0.0625] COUNTERSINK FOR FLAT HEAD SCREW
2. DIMENSIONS IN CENTIMETERS [INCHES]
3. TOLERANCE ± 0.05 [0.019] UNLESS OTHERWISE NOTED

BRUSHING DEVICE TEMPLATE
FIGURE 9

BILLING CODE 6355–01–C

Dated: March 13, 2008.

Todd A. Stevenson,

Secretary, Consumer Product Safety Commission.

Note: The following appendix will not appear in the Code of Federal Regulations.

Appendix—List of Relevant Documents

(The following documents are available from the Commission's Office of the Secretary, Consumer Product Safety Commission, Room 502, 4330 East West Highway, Bethesda, Maryland 20814–4408; telephone (301) 504–7923 or from the Commission's Web site (*http://www.cpsc.gov/library/foia/foia.html*)).

1. Briefing memorandum from Robert J. Howell, Acting Assistant Executive Director, EXHR and Patricia K. Adair, Project Manager, Directorate for Engineering Sciences, to the Commission, ''Draft Final Amendments to the *Standard for the Flammability of Clothing Textiles,* 16 CFR Part 1610,'' January 11, 2008.
2. Memorandum from David Miller, EPHA, Directorate for Epidemiology, to Patricia K. Adair, Project Manager, ''General Wearing Apparel Fires—Fatalities and Emergency Department Treated Injuries,'' December 27, 2007.
3. Memorandum from Dale R. Ray, Directorate for Economic Analysis, to Patricia K. Adair, Project Manager, ''Final Regulatory Analyses—Clothing Textiles Standard Amendment,'' August 6, 2007.
4. Memorandum from Gail Stafford and Weiying Tao, Directorate for Laboratory Sciences, to Patricia K. Adair, Project Manager, ''Response to Comments Received on Notice of Proposed Rulemaking (NPR) for Updating the Standard for the Flammability of Clothing Textiles,'' October 22, 2007.
5. Memorandum from John R. Murphy, Division of Mechanical Engineering, to Patricia K. Adair, Project Manager, ''Response to Comments Received as a Result of the Notice of Proposed Rulemaking (NPR) for Updating the Standard for the Flammability of Clothing Textiles,'' November 16, 2007.
6. Memorandum from Martha A. Kosh, Office of the Secretary, to ES, ''Proposed Changes to Textile Flammability Standard Comments,'' May 15, 2007.

[FR Doc. E8–5569 Filed 3–24–08; 8:45 am]

BILLING CODE 6355–01–P

DEPARTMENT OF HEALTH AND HUMAN SERVICES

Food and Drug Administration

21 CFR Part 558

New Animal Drugs for Use in Animal Feed; Pyrantel; Technical Amendment

AGENCY: Food and Drug Administration, HHS.

ACTION: Final rule; technical amendment.

SUMMARY: The Food and Drug Administration (FDA) is amending its animal drug regulations to correct an inadvertent omission in the list of concentrations of pyrantel tartrate Type A medicated articles approved for use by Phibro Animal Health. This action is being taken to improve the accuracy of the animal drug regulations.

DATES: This rule is effective March 25, 2008.

FOR FURTHER INFORMATION CONTACT: George K. Haibel, Center for Veterinary Medicine (HFV–6), Food and Drug Administration, 7519 Standish Pl., Rockville, MD 20855, 240–276–9019, e-mail: *george.haibel@fda.hhs.gov*.

SUPPLEMENTARY INFORMATION: FDA is amending the animal drug regulations in 21 CFR 558.485 to correct an inadvertent omission in the list of concentrations of pyrantel tartrate Type A medicated articles approved for use by Phibro Animal Health. This action is being taken to improve the accuracy of the animal drug regulations.

This rule does not meet the definition of ''rule'' in 5 U.S.C. 804(3)(A) because it is a rule of ''particular applicability.'' Therefore, it is not subject to the congressional review requirements in 5 U.S.C. 801–808.

List of Subjects in 21 CFR Part 558

Animal drugs, Animal feeds.

■ Therefore, under the Federal Food, Drug, and Cosmetic Act and under authority delegated to the Commissioner of Food and Drugs and redelegated to the Center for Veterinary Medicine, 21 CFR part 558 is amended as follows:

PART 558—NEW ANIMAL DRUGS FOR USE IN ANIMAL FEEDS

■ 1. The authority citation for 21 CFR part 558 continues to read as follows:

Authority: 21 U.S.C. 360b, 371.

§ 558.485 [Amended]

■ 2. In § 558.485, in paragraph (b)(1), add ''48,'' in numerical sequence.

Dated: March 12, 2008.

Bernadette Dunham,

Director, Center for Veterinary Medicine.

[FR Doc. E8–5928 Filed 3–24–08; 8:45 am]

BILLING CODE 4160–01–S

DEPARTMENT OF TRANSPORTATION

Federal Highway Administration

23 CFR Part 661

[FHWA Docket No. FHWA–2007–27536]

RIN 2125–AF20

Indian Reservation Road Bridge Program

AGENCY: Federal Highway Administration (FHWA), DOT.

ACTION: Final rule.

SUMMARY: Section 1119 of the Safe, Accountable, Flexible, Efficient Transportation Equity Act: A Legacy for Users (SAFETEA–LU) (Pub. L. 109–59, 119 Stat. 1144) makes significant changes to the Indian Reservation Road Bridge Program (IRRBP). In addition, it authorizes $14 million of IRRBP funds per year for the replacement or rehabilitation of structurally deficient or functionally obsolete Indian Reservation Road (IRR) bridges. This final rule amends the existing IRRBP by establishing new policies and provisions. Also, in this final rule, preliminary engineering (PE) is now an eligible activity.

DATES: Effective April 24, 2008.

FOR FURTHER INFORMATION CONTACT: Mr. Robert Sparrow, Federal Lands Highway, HFPD–9, (202) 366–9483; or Ms. Vivian Philbin, Federal Lands Highway Counsel, HFFC–16, (720) 963–3445; Federal Highway Administration, 1200 New Jersey Avenue, SE., Washington, DC 20590. Office hours are from 7:45 a.m. to 4:15 p.m., e.t., Monday through Friday, except Federal holidays.

SUPPLEMENTARY INFORMATION:

Electronic Access and Filing

Internet users may access this document, the notice of proposed rulemaking (NPRM), and all comments received by the DOT by accessing the Federal eRulemaking portal at: *http://www.regulations.gov*. It is available 24 hours each day, 365 days each year. Electronic submission and retrieval help and guidelines are available under the help section of the Web site.

An electronic copy of this document may also be downloaded by accessing the Office of the Federal Register's home page at: *http://www.archives.gov* or the Government Printing Office's Web page at *http://www.gpoaccess.gov/nara*.

Background

The Transportation Equity Act for the 21st Century (TEA–21) (Pub. L. 105–178, 112 Stat. 107), established the IRRBP, codified at 23 U.S.C.

202(d)(4)(B) under which a minimum of $13 million of IRR Program funds was set aside for a nationwide priority program for improving deficient IRR bridges. On May 8, 2003, the FHWA published a final rule for the IRRBP at 68 FR 24642 (23 CFR 661). This present rulemaking is necessary due to recent legislative changes.

Section 1119 of the SAFETEA–LU authorizes $14 million per year for fiscal years 2005 through 2009 from the Highway Trust Fund for the IRRBP to carry out PE, construction engineering (CE), and construction to replace or rehabilitate structurally deficient or functionally obsolete IRR bridges. Pursuant to the new statutory requirements, the FHWA developed amendments to the existing IRRBP regulation. This final rule reflects these amendments.

Discussion of Comments Received to the Notice of Proposed Rulemaking

The FHWA published its NPRM on June 5, 2007, at 72 FR 31013 requesting comments to the proposed amendments. In response to the NPRM, the FHWA received comments from the Indian Reservation Road Coordinating Committee (IRRCC) and from three Tribes: The Cherokee Nation, Eastern Band of Cherokee Indians, and the Seminole Nation of Oklahoma. The FHWA addressed each of the comments in adopting this final rule.

The majority of the comments received addressed several common issues. These issues are addressed and discussed under the appropriate section below. The remaining sections did not receive comments and will be adopted as proposed.

Section-by-Section Discussion of Changes

1. What definitions apply to this regulation? (661.5)

Structurally deficient (SD)—The definition was updated to accurately align it with the FHWA's technical definition. A bridge becomes structurally deficient when it reaches the set threshold of one of the six criteria from the FHWA's National Bridge Inventory (NBI). This update does not change the substance of the definition, but rather will reduce ambiguity by making this definition consistent throughout FHWA.

2. When is a bridge eligible for replacement? (661.19) and When is a bridge eligible for rehabilitation? (661.21)

The IRRCC recommends that instead of the sufficiency rating numbers identified in the NPRM, the final regulation should comply with the latest criteria established by the FHWA's National Bridge Inspection Standards (NBIS) for replacement or rehabilitation of an IRR bridge project.

The FHWA adopted this recommendation. The regulation now states that the rehabilitation and replacement criteria is the same as those used in 23 CFR part 650.409(a). This change is made in order for the IRRBP rule to be consistent with any future changes in the eligibility requirements for rehabilitation or replacement of bridges as established by the FHWA. However, this change will not affect the existing eligibility requirements in the existing regulations.

3. How will a bridge project be programmed for funding once eligibility has been determined? (661.23)

The IRRCC and the Seminole Nation of Oklahoma recommend that the first come first served basis should be eliminated and the criteria for ranking for the bridge applications should follow the provisions proposed under subparagraph (b)(1)–(b)(6) of this section, and deleting the proposed first sentence under subparagraph (b).

The FHWA adopted this recommendation and revised this section to eliminate the first come first served basis. Under this final rule, IRR bridges that are most critical will be given the highest priority for funding.

4. What does a complete application package for PE consist of and how does the project receive funding? (661.25) and What does a complete application package for construction consist of and how does the project receive funding? (661.27)

The Seminole Nation of Oklahoma recommends improving these sections by adding a timeframe (60 or 90 days) for the FHWA to review and return incomplete application packages so projects can be pursued.

The proposed language in these sections states that an incomplete application package would be disapproved and returned for revision and resubmission along with the notation as to why it was disapproved. The FHWA believes that with this provision the projects can still be pursued once the application is completed and resubmitted to the Bureau of Indian Affairs (BIA) and the FHWA.

Likewise, the revised language in these sections clarifies that the Tribes that will receive direct funding from the FHWA are the Tribes who entered into a contract with the FHWA under an FHWA/Tribal agreement.

5. How does ownership impact project selection? (661.29)

The Cherokee Nation commented that this proposed section places a much higher priority on BIA bridges versus non-BIA bridges even though the statute makes no mention of distinction between the two. They object to the ownership distinctions in the proposed language of this section.

The FHWA believes that the ownership requirement in this section is an issue since the States and counties have ownership and primary responsibility for their bridges. Therefore, a smaller percentage of available funds has been set aside for non-BIA bridges since the States and counties have access to Federal-aid and other funding sources to replace or rehabilitate their bridges, whereas the IRRBP is the only funding source for the BIA and Tribal bridges. As such, the FHWA will retain the language in this section as proposed in the NPRM.

6. What percentage of IRRBP funding is available for PE and construction? (661.33)

The Eastern Band of Cherokee Indians does not agree with the proposal that 15 percent of IRRBP funding be eligible for PE costs. They believe that typical PE costs average 10 percent and that the proposed percentage should be reduced accordingly.

The FHWA maintains that given the historic average size of the projects, the 15 percent limit for PE is adequate and feels that this percentage represents the average cost of PE on the size of projects typically funded through this program. Therefore, the FHWA has adopted the language as proposed.

7. What percentage of IRRBP funding is available for use on BIA owned IRR bridges and non-BIA owned IRR bridges? (661.35)

The Cherokee Nation disagrees with the proposed regulation in this section in that the larger percentage of the IRRBP funds is set aside for BIA bridges versus the non-BIA bridges.

The FHWA's response to the comment is that the existing regulation states that up to 80 percent of the annual funding will be available for use on BIA and Tribally owned bridges with the remaining funds to be used for non-BIA owned bridges. This final rule utilizes the same funding distribution but it has the ability to shift funds between BIA and Tribally owned, and non-BIA owned bridge projects at various times during the fiscal year so

as to maximize the number of projects funded and the overall effectiveness of the program regardless of ownership.

8. What are the funding limitations on individual IRRBP projects? (661.37)

The Cherokee Nation, Eastern Band of Cherokee Indians, and the Seminole Nation of Oklahoma made similar comments on this section. These Tribes disagree with the funding limitation established by the FHWA for construction of non-BIA owned bridges. Likewise, they feel that the requirement to provide 20 percent matching funds in order to qualify for IRRBP funds would result in unfair treatment for some Tribes.

The proposed funding ceiling of $1,000,000 for non-BIA owned bridges was developed based on a review of historical data on IRRBP funded projects. The FHWA determined that non-BIA owned bridge projects have an average project size less than $600,000, and more than 75 percent of the projects were funded at a level below $1,000,000. However, to meet funding flexibility, this section will now allow a Tribe to request additional funds for non-BIA owned projects that are above the thresholds by submitting a written justification for consideration to the FHWA. The approval of the requests would be considered on a case-by-case basis.

9. What should be done with a deficient BIA owned IRR bridge if the Indian Tribe does not support the project? (661.59)

The FHWA revised the proposed section in the NPRM to clarify that when the Tribe does not support a deficient IRR bridge for rehabilitation or replacement, the deficient IRR bridge can still remain open for traffic provided the structure's load rating is reduced to protect the safety of the motoring public.

Other

The IRRCC recommends that the proposed regulation be revised to clarify that a Tribally owned bridge be treated the same as a BIA-owned bridge for purposes of eligibility for replacement or rehabilitation and preliminary engineering costs.

The FHWA adopted the recommendation and Tribal bridges are now considered the same as BIA owned with regard to the funding criteria to align it to the IRR Program policy as established in 25 CFR part 170. The Tribal bridges are now eligible to receive 100 percent of funding for construction and $150,000 maximum limit for PE.

Distribution and Derivation Tables

For ease of reference, distribution and derivation tables are provided for the current sections and the new sections, as follows:

DISTRIBUTION TABLE

Old section	New section
661.1	661.1.
661.3	661.3—Revised.
661.5	661.5—Revised.
661.7	661.7—Revised.
661.9	661.23—Redesignated and Revised.
661.11	661.41—Redesignated and Revised.
661.13	Removed.
661.15	661.9—Redesignated.
661.17	661.11—Redesignated.
661.19	Removed.
661.21	661.13—Redesignated.
661.23	661.15—Redesignated and Revised.
661.25	661.17—Redesignated and Revised.
661.27	661.19—Redesignated and Revised.
661.29	661.21—Redesignated and Revised.
661.31	661.29—Redesignated and Revised.
661.33	661.31—Redesignated and Revised.
661.35	661.35—Revised.
661.37	661.37—Revised.
661.39	Removed.
661.41	661.27—Redesignated and Revised.
661.43	Removed.
661.45	661.57—Redesignated.
661.47	661.39—Redesignated and Revised.
661.49	661.43—Redesignated and Revised.
661.51	661.47—Redesignated and Revised.
None	661.25—Added.
None	661.33—Added.
None	661.45—Added.
None	661.49—Added.
None	661.51—Added.
None	661.53—Added.
None	661.55—Added.
None	661.59—Added.

DERIVATION TABLE

New section	Old section
661.1	661.1.
661.3	661.3.
661.5	661.5.
661.7	661.7.
661.9	661.15.
661.11	661.17.
661.13	661.21.
661.15	661.23.
661.17	661.25.
661.19	661.27.
661.21	661.29.
661.23	661.9.
661.25	None.

DERIVATION TABLE—Continued

New section	Old section
661.27	661.41.
661.29	661.31.
661.31	661.33.
661.33	None.
661.35	661.35.
661.37	661.37.
661.39	661.47.
661.41	661.11.
661.43	661.49.
661.45	None.
661.47	661.51.
661.49	None.
661.51	None.
661.53	None.
661.55	None.
661.57	661.45.
661.59	None.

Rulemaking Analyses and Notices

Executive Order 12866 (Regulatory Planning and Review) and USDOT Regulatory Policies and Procedures

The FHWA has determined that this action would not be a significant regulatory action within the meaning of Executive Order 12866 and would not be significant within the meaning of U.S. Department of Transportation regulatory policies and procedures. It is anticipated that the economic impact of this rulemaking would be minimal. This rule would not adversely affect, in a material way, any sector of the economy. In addition, these changes would not interfere with any action taken or planned by another agency and would not materially alter the budgetary impact of any entitlements, grants, user fees, or loan programs. Consequently, a full regulatory evaluation is not required.

Regulatory Flexibility Act

In compliance with the Regulatory Flexibility Act (Pub. L. 96–354, 5 U.S.C. 601–612) the FHWA has evaluated the effects of this action on small entities and has determined that this action would not have a significant economic impact on a substantial number of small entities. This final rule amends the existing regulations pursuant to section 1119 of SAFETEA–LU and would not fundamentally alter the funding available for the replacement or rehabilitation of structurally deficient or functionally obsolete IRR bridges. For these reasons, the FHWA certifies that this action would not have a significant economic impact on a substantial number of small entities.

Unfunded Mandates Reform Act of 1995

This rule does not impose unfunded mandates as defined by the Unfunded Mandates Reform Act of 1995 (Pub. L.

104–4, March 22, 1995, 109 Stat. 48). This rule will not result in the expenditure by State, local, and tribal governments, in the aggregate, or by the private sector, of $128.1 million or more in any one year (2 U.S.C. 1532). Further, in compliance with the Unfunded Mandates Reform Act of 1995, the FHWA will evaluate any regulatory action that might be proposed in subsequent stages of the proceeding to assess the effects on State, local, tribal governments and the private sector.

Executive Order 13132 (Federalism Assessment)

This action has been analyzed in accordance with the principles and criteria contained in Executive Order 13132, and the FHWA has determined that this action would not have sufficient federalism implications to warrant the preparation of a federalism assessment. The FHWA has also determined that this proposed action would not preempt any State law or State regulation or affect the States' ability to discharge traditional State governmental functions.

Executive Order 13175 (Tribal Consultation)

The FHWA met with the IRRCC at three separate meetings in Tulsa, Oklahoma, in February, 2006; Denver, Colorado, in March, 2006; and Hinckley, Minnesota, in August, 2006, to jointly review the proposed regulation and provide the IRRCC with the opportunity to make recommendations prior to publishing the NPRM. The IRRCC was established under 25 CFR part 170 by the Secretaries of the Interior and Transportation, to provide input and recommendation to BIA and FHWA in developing IRR Program policies and procedures and to supplement government-to-government consultation by coordinating and obtaining input from Tribes, BIA, and FHWA. The IRRCC consists of primary and alternate Tribal representatives from each of the 12 BIA Regions, along with 2 non-voting Federal representatives (one each from BIA and FHWA).

The proposed regulation was first distributed to the IRRCC at the Tulsa meeting referenced above. The IRRCC then met in a special meeting in Denver, Colorado, specifically to review the regulation and develop recommendations for the FHWA rulemaking. The funding workgroup of the IRRCC was assigned the task of carrying forth the recommendations to FHWA. In Hinckley, Minnesota, the FHWA met with the funding workgroup and together they reviewed the comments. The NPRM reflected the results of the initial IRRCC input.

The FHWA and IRRCC met again in August 2007 in Ketchikan, Alaska. At that meeting, the IRRCC reviewed the published NPRM and provided recommendations and comments to FHWA. All aspects of the regulation were reviewed by the IRRCC and the comments received by the IRRCC and its members are discussed above in the section-by-section discussion.

Executive Order 13211 (Energy Effects)

We have analyzed this action under Executive Order 13211, Actions Concerning Regulations That Significantly Affect Energy Supply, Distribution, or Use dated May 18, 2001. We have determined that it is not a significant energy action under that order since it is not likely to have a significant adverse effect on the supply, distribution, or use of energy. Therefore, a Statement of Energy Effects is not required.

Executive Order 12372 (Intergovernmental Review)

Catalog of Federal Domestic Assistance Program Number 20.205, Highway Planning and Construction. The regulations implementing Executive Order 12372 regarding intergovernmental consultation on Federal programs and activities apply to this program.

Paperwork Reduction Act

Under the Paperwork Reduction Act of 1995 (PRA) (44 U.S.C. 3501), Federal agencies must obtain approval from the Office of Management and Budget (OMB) for each collection of information they conduct, sponsor, or require through regulations. The FHWA has determined that this action does not contain collection of information requirements for the purposes of the PRA.

Executive Order 12988 (Civil Justice Reform)

This action meets applicable standards in sections 3(a) and 3(b)(2) of Executive Order 12988, Civil Justice Reform, to minimize litigation, eliminates ambiguity, and reduce burden.

Executive Order 13045 (Protection of Children)

We have analyzed this rule under Executive Order 13045, Protection of Children from Environmental Health Risks and Safety Risks. The FHWA certifies that this action would not cause any environmental risk to health or safety that might disproportionately affect children.

Executive Order 12630 (Taking of Private Property)

The FHWA has analyzed this rule under Executive Order 12630, Governmental Actions and Interface with Constitutionally Protected Property Rights. The FHWA does not anticipate that this action would affect a taking of private property or otherwise have taking implications under Executive Order 12630.

National Environmental Policy Act

The agency has analyzed this action for the purpose of the National Environmental Policy Act of 1969 (42 U.S.C. 4321–4347) and has determined that this action would not have any effect on the quality of the environment.

Regulation Identification Number

A regulation identification number (RIN) is assigned to each regulatory action listed in the Unified Agenda of Federal Regulations. The Regulatory Information Service Center publishes the Unified Agenda in April and October of each year. The RIN contained in the heading of this document can be used to cross reference this action with the Unified Agenda.

List of Subjects in 23 CFR Part 661

Indian Reservation Road Bridge Program.

Issued on: March 14, 2008.

James D. Ray,

Acting Federal Highway Administrator.

■ In consideration of the foregoing, the FHWA amends title 23, Code of Federal Regulations, by revising part 661 to read as set forth below:

PART 661—INDIAN RESERVATION ROAD BRIDGE PROGRAM

Sec.

661.1 What is the purpose of this regulation?
661.3 Who must comply with this regulation?
661.5 What definitions apply to this regulation?
661.7 What is the IRRBP?
661.9 What is the total funding available for the IRRBP?
661.11 When do IRRBP funds become available?
661.13 How long are these funds available?
661.15 What are the eligible activities for IRRBP funds?
661.17 What are the criteria for bridge eligibility?
661.19 When is a bridge eligible for replacement?
661.21 When is a bridge eligible for rehabilitation?

661.23 How will a bridge project be programmed for funding once eligibility has been determined?
661.25 What does a complete application package for PE consist of and how does the project receive funding?
661.27 What does a complete application package for construction consist of and how does the project receive funding?
661.29 How does ownership impact project selection?
661.31 Do IRRBP projects have to be listed on an approved IRR TIP?
661.33 What percentage of IRRBP funding is available for PE and construction?
661.35 What percentage of IRRBP funding is available for use on BIA and Tribally owned IRR bridges, and non-BIA owned IRR bridges?
661.37 What are the funding limitations on individual IRRPB projects?
661.39 How are project cost overruns funded?
661.41 After a bridge project has been completed (either PE or construction) what happens with the excess or surplus funding?
661.43 Can other sources of funds be used to finance a queued project in advance of receipt of IRRBP funds?
661.45 What happens when IRRBP funds cannot be obligated by the end of the fiscal year?
661.47 Can bridge maintenance be performed with IRRBP funds?
661.49 Can IRRBP funds be spent on Interstate, State Highway, and Toll Road IRR bridges?
661.51 Can IRRBP funds be used for the approach roadway to a bridge?
661.53 What standards should be used for bridge design?
661.55 How are BIA and Tribal owned IRR bridges inspected?
661.57 How is a list of deficient bridges to be generated?
661.59 What should be done with a deficient BIA owned IRR bridge if the Indian Tribe does not support the project?

Authority: 23 U.S.C. 120(j) and (k), 202, and 315; Section 1119 of the Safe, Accountable, Flexible, Efficient Transportation Equity Act: A Legacy for Users (SAFETEA–LU) (Pub. L. 109–59, 119 Stat. 1144); and 49 CFR 1.48.

§ 661.1 What is the purpose of this regulation?

The purpose of this regulation is to prescribe policies for project selection and fund allocation procedures for administering the Indian Reservation Road Bridge Program (IRRBP).

§ 661.3 Who must comply with this regulation?

Public authorities must comply to participate in the IRRBP by applying for preliminary engineering (PE), construction, and construction engineering (CE) activities for the replacement or rehabilitation of structurally deficient and functionally obsolete Indian Reservation Road (IRR) bridges.

§ 661.5 What definitions apply to this regulation?

The following definitions apply to this regulation:

Approach roadway means the portion of the highway immediately adjacent to the bridge that affects the geometrics of the bridge, including the horizontal and vertical curves and grades required to connect the existing highway alignment to the new bridge alignment using accepted engineering practices and ensuring that all safety standards are met.

Construction engineering (CE) is the supervision, inspection, and other activities required to ensure the project construction meets the project's approved acceptance specifications, including but not limited to: additional survey staking functions considered necessary for effective control of the construction operations; testing materials incorporated into construction; checking shop drawings; and measurements needed for the preparation of pay estimates.

Functionally obsolete (FO) is the state in which the deck geometry, load carrying capacity (comparison of the original design load to the State legal load), clearance, or approach roadway alignment no longer meets the usual criteria for the system of which it is an integral part.

Indian Reservation Road (IRR) means a public road that is located within or provides access to an Indian reservation or Indian trust land or restricted Indian land that is not subject to fee title alienation without the approval of the Federal government, or Indian and Alaska Native villages, groups, or communities in which Indians and Alaska Natives reside, whom the Secretary of the Interior has determined are eligible for services generally available to Indians under Federal laws specifically applicable to Indians.

Indian reservation road bridge means a structure located on an IRR, including supports, erected over a depression or an obstruction, such as water, a highway, or a railway, and having a track or passageway for carrying traffic or other moving loads, and having an opening measured along the center of the roadway of more than 20 feet between undercopings of abutments or spring lines of arches, or extreme ends of the openings for multiple boxes; it may also include multiple pipes, where the clear distance between openings is less than half of the smaller contiguous opening.

Life cycle cost analysis (LCCA) means a process for evaluating the total economic worth of a usable project segment by analyzing initial costs and discounted future costs, such as maintenance, user costs, reconstruction, rehabilitation, restoring, and resurfacing costs, over the life of the project segment.

National Bridge Inventory (NBI) means the aggregation of structure inventory and appraisal data collected to fulfill the requirements of the National Bridge Inspection Standards (NBIS).

Plans, specifications and estimates (PS&E) means construction drawings, compilation of provisions, and construction project cost estimates for the performance of the prescribed scope of work.

Preliminary engineering (PE) means planning, survey, design, engineering, and preconstruction activities (including archaeological, environmental, and right-of-way activities) related to a specific bridge project.

Public authority means a Federal, State, county, town, or township, Indian tribe, municipal or other local government or instrumentality with authority to finance, build, operate, or maintain toll or toll-free facilities.

Public road means any road or street under the jurisdiction of and maintained by a public authority and open to public travel.

Structurally deficient (SD) means a bridge becomes structurally deficient when it reaches the set threshold of one of the six criteria from the FHWA NBI.

Structure Inventory and Appraisal (SI&A) Sheet means the graphic representation of the data recorded and stored for each NBI record in accordance with the Recording and Coding Guide for the Structure Inventory and Appraisal of the Nation's Bridges (Report No. FHWA–PD–96–001).

Sufficiency rating (SR) means the numerical rating of a bridge based on its structural adequacy and safety, essentiality for public use, and its serviceability and functional obsolescence.

§ 661.7 What is the IRRBP?

The IRRBP, as established under 23 U.S.C. 202(d)(4), is a nationwide priority program for improving structurally deficient and functionally obsolete IRR bridges.

§ 661.9 What is the total funding available for the IRRBP?

The statute authorizes $14 million to be appropriated from the Highway Trust Fund in Fiscal Years 2005 through 2009.

§ 661.11 When do IRRBP funds become available?

IRRBP funds are authorized at the start of each fiscal year but are subject to Office of Management and Budget apportionment before they become available to FHWA for further distribution.

§ 661.13 How long are these funds available?

IRRBP funds for each fiscal year are available for obligation for the year authorized plus three years (a total of four years).

§ 661.15 What are the eligible activities for IRRBP funds?

(a) IRRBP funds can be used to carry out PE, construction, and CE activities of projects to replace, rehabilitate, seismically retrofit, paint, apply calcium magnesium acetate, sodium acetate/formate or other environmentally acceptable, minimally corrosive anti-icing and deicing compositions, or install scour countermeasures for structurally deficient or functionally obsolete IRR bridges, including multiple pipe culverts.

(b) If a bridge is replaced under the IRRBP, IRRBP funds can be also used for the demolition of the old bridge.

§ 661.17 What are the criteria for bridge eligibility?

(a) Bridge eligibility requires the following:

(1) Have an opening of 20 feet or more;

(2) Be located on an IRR that is included in the IRR Inventory;

(3) Be structurally deficient or functionally obsolete, and

(4) Be recorded in the NBI maintained by the FHWA.

(b) Bridges that were constructed, rehabilitated or replaced in the last 10 years, will be eligible only for seismic retrofit or installation of scour countermeasures.

§ 661.19 When is a bridge eligible for replacement?

To be eligible for replacement, the bridge must be considered structurally deficient or functionally obsolete and must be in accordance with 23 CFR part 650.409(a) for bridge replacement. After an existing bridge is replaced under the IRRBP, it must be taken completely out of service and removed from the inventory. If the original bridge is considered historic, it must still be removed from the inventory, however the Tribe is allowed to request an exemption from the BIA Division of Transportation (BIADOT) to allow the bridge to remain in place.

§ 661.21 When is a bridge eligible for rehabilitation?

To be eligible for rehabilitation, the bridge must be considered structurally deficient or functionally obsolete and must be in accordance with 23 CFR part 650.409(a) for bridge rehabilitation. A bridge eligible for rehabilitation may be replaced if the life cycle cost analysis is conducted which shows the cost for bridge rehabilitation exceeds the replacement cost.

§ 661.23 How will a bridge project be programmed for funding once eligibility has been determined?

(a) All projects will be programmed for funding after a completed application package is received and accepted by the FHWA. At that time, the project will be acknowledged as either BIA and Tribally owned, or non-BIA owned and placed in either a PE or a construction queue.

(b) All projects will be ranked and prioritized based on the following criteria:

(1) Bridge sufficiency rating (SR);

(2) Bridge status with structurally deficient (SD) having precedence over functionally obsolete (FO);

(3) Bridges on school bus routes;

(4) Detour length;

(5) Average daily traffic; and

(6) Truck average daily traffic.

(c) Queues will carryover from fiscal year to fiscal year as made necessary by the amount of annual funding made available.

§ 661.25 What does a complete application package for PE consist of and how does the project receive funding?

(a) A complete application package for PE consists of the following: the certification checklist, IRRBP transportation improvement program (TIP), project scope of work, detailed cost for PE, and SI&A sheet.

(b) For non-BIA IRR bridges, the application package must also include a tribal resolution supporting the project and identification of the required minimum 20 percent local funding match.

(c) The IRRBP projects for PE will be placed in queue and determined as eligible for funding after receipt by FHWA of a complete application package. Incomplete application packages will be disapproved and returned for revision and resubmission along with a notation providing the reason for disapproval.

(d) Funding for the approved eligible projects on the queues will be made available to the Tribes, under an FHWA/Tribal agreement, or the Secretary of the Interior upon availability of program funding at FHWA.

§ 661.27 What does a complete application package for construction consist of and how does the project receive funding?

(a) A complete application package for construction consists of the following: a copy of the approved PS&E, the certification checklist, SI&A sheet, and IRRBP TIP. For non-BIA IRR bridges, the application package must also include a copy of a letter from the bridge's owner approving the project and its PS&E, a tribal resolution supporting the project, and identification of the required minimum 20 percent local funding match. All environmental and archeological clearances and complete grants of public rights-of-way must be acquired prior to submittal of the construction application package.

(b) The IRRBP projects for construction will be placed in queue and determined as eligible for funding after receipt by FHWA of a complete application package. Incomplete application packages will be disapproved and returned for revision and resubmission along with a notation providing the reason for disapproval.

(c) Funding for the approved eligible projects on the queues will be made available to the Tribes, under an FHWA/Tribal agreement, or the Secretary of the Interior upon availability of program funding at FHWA.

§ 661.29 How does ownership impact project selection?

Since the Federal government has both a trust responsibility and owns the BIA bridges on Indian reservations, primary consideration will be given to eligible projects on BIA and Tribally owned IRR bridges. A smaller percentage of available funds will be set aside for non-BIA IRR bridges, since States and counties have access to Federal-aid and other funding to design, replace and rehabilitate their bridges and that 23 U.S.C. 204(c) requires that IRR funds be supplemental to and not in lieu of other funds apportioned to the State. The program policy will be to maximize the number of IRR bridges participating in the IRRBP in a given fiscal year regardless of ownership.

§ 661.31 Do IRRBP projects have to be listed on an approved IRR TIP?

Yes. All IRRBP projects must be listed on an approved IRR TIP. The approved IRR TIP will be forwarded by FHWA to the respective State for inclusion into its State TIP.

§ 661.33 What percentage of IRRBP funding is available for PE and construction?

Up to 15 percent of the funding made available in any fiscal year will be

eligible for PE. The remaining funding in any fiscal year will be available for construction.

§ 661.35 What percentage of IRRBP funding is available for use on BIA and Tribally owned IRR bridges, and non-BIA owned IRR bridges?

(a) Up to 80 percent of the available funding made available for PE and construction in any fiscal year will be eligible for use on BIA and Tribally owned IRR bridges. The remaining funding in any fiscal year will be made available for PE and construction for use on non-BIA owned IRR bridges.

(b) At various times during the fiscal year, FHWA will review the projects awaiting funding and may shift funds between BIA and Tribally owned, and non-BIA owned bridge projects so as to maximize the number of projects funded and the overall effectiveness of the program.

§ 661.37 What are the funding limitations on individual IRRBP projects?

The following funding provisions apply in administration of the IRRBP:

(a) An IRRBP eligible BIA and Tribally owned IRR bridge is eligible for 100 percent IRRBP funding, with a $150,000 maximum limit for PE.

(b) An IRRBP eligible non-BIA owned IRR bridge is eligible for up to 80 percent IRRBP funding, with a $150,000 maximum limit for PE and $1,000,000 maximum limit for construction. The minimum 20 percent local match will need to be identified in the application package. IRR Program construction funds received by a Tribe may be used as the local match.

(c) Requests for additional funds above the referenced thresholds may be submitted along with proper justification to FHWA for consideration. The request will be considered on a case-by-case basis. There is no guarantee for the approval of the request for additional funds.

§ 661.39 How are project cost overruns funded?

(a) A request for additional IRRBP funds for cost overruns on a specific bridge project must be submitted to BIADOT and FHWA for approval. The written submission must include a justification, an explanation as to why the overrun occurred, and the amount of additional funding required with supporting cost data. If approved by FHWA, the request will be placed at the top of the appropriate queue (with a contract modification request having a higher priority than a request for additional funds for a project award) and funding may be provided if available.

(b) Project cost overruns may also be funded out of the Tribe's regular IRR Program construction funding.

§ 661.41 After a bridge project has been completed (either PE or construction) what happens with the excess or surplus funding?

Since the funding is project specific, once a bridge design or construction project has been completed under this program, any excess or surplus funding is returned to FHWA for use on additional approved deficient IRRBP projects.

§ 661.43 Can other sources of funds be used to finance a queued project in advance of receipt of IRRBP funds?

Yes. A Tribe can use other sources of funds, including IRR Program construction funds, on a project that has been approved for funding and placed on the queue and then be reimbursed when IRRBP funds become available. If IRR Program construction funds are used for this purpose, the funds must be identified on an FHWA approved IRR TIP prior to their expenditure.

§ 661.45 What happens when IRRBP funds cannot be obligated by the end of the fiscal year?

IRRBP funds provided to a project that cannot be obligated by the end of the fiscal year are to be returned to FHWA during August redistribution. The returned funds will be re-allocated to the BIA the following fiscal year after receipt and acceptance at FHWA from BIA of a formal request for the funds, which includes a justification for the amounts requested and the reason for the failure of the prior year obligation.

§ 661.47 Can bridge maintenance be performed with IRRBP funds?

No. Bridge maintenance repairs, e.g., guard rail repair, deck repairs, repair of traffic control devices, striping, cleaning scuppers, deck sweeping, snow and debris removal, etc., are not eligible uses of IRRBP funding. The Department of the Interior annual allocation for maintenance and IRR Program construction funds are eligible funding sources for bridge maintenance.

§ 661.49 Can IRRBP funds be spent on Interstate, State Highway, and Toll Road IRR bridges?

Yes. Interstate, State Highway, and Toll Road IRR bridges are eligible for funding as described in § 661.37(b).

§ 661.51 Can IRRBP funds be used for the approach roadway to a bridge?

(a) Yes, costs associated with approach roadway work, as defined in § 661.5 are eligible.

(b) Long approach fills, causeways, connecting roadways, interchanges, ramps, and other extensive earth structures, when constructed beyond an attainable touchdown point, are not eligible uses of IRRBP funds.

§ 661.53 What standards should be used for bridge design?

(a) Replacement—A replacement structure must meet the current geometric, construction and structural standards required for the types and volumes of projected traffic on the facility over its design life consistent with 25 CFR part 170, Subpart D, Appendix B and 23 CFR part 625.

(b) Rehabilitation—Bridges to be rehabilitated, as a minimum, should conform to the standards of 23 CFR part 625, Design Standards for Federal-aid Highways, for the class of highway on which the bridge is a part.

§ 661.55 How are BIA and Tribal owned IRR bridges inspected?

BIA and Tribally owned IRR bridges are inspected in accordance with 25 CFR part 170.504–170.507.

§ 661.57 How is a list of deficient bridges to be generated?

(a) In consultation with the BIA, a list of deficient BIA IRR bridges will be developed each fiscal year by the FHWA based on the annual April update of the NBI. The NBI is based on data from the inspection of all bridges. Likewise, a list of non-BIA IRR bridges will be obtained from the NBI. These lists would form the basis for identifying bridges that would be considered potentially eligible for participation in the IRRBP. Two separate master bridge lists (one each for BIA and non-BIA IRR bridges) will be developed and will include, at a minimum, the following:

(1) Sufficiency rating (SR);

(2) Status (structurally deficient or functionally obsolete);

(3) Average daily traffic (NBI item 29);

(4) Detour length (NBI item 19); and

(5) Truck average daily traffic (NBI item 109).

(b) These lists would be provided by the FHWA to the BIADOT for publication and notification of affected BIA regional offices, Indian Tribal governments (ITGs), and State and local governments.

(c) BIA regional offices, in consultation with ITGs, are encouraged to prioritize the design for bridges that are structurally deficient over bridges that are simply functionally obsolete, since the former is more critical structurally than the latter. Bridges that have higher average daily traffic (ADT) should be considered before those that have lower ADT. Detour length should

also be a factor in selection and submittal of bridges, with those having a higher detour length being of greater concern. Lastly, bridges with higher truck ADT should take precedence over those which have lower truck ADT. Other items of note should be whether school buses use the bridge and the types of trucks that may cross the bridge and the loads imposed.

§ 661.59 What should be done with a deficient BIA owned IRR bridge if the Indian Tribe does not support the project?

The BIA should notify the Tribe and encourage the Tribe to develop and submit an application package to FHWA for the rehabilitation or replacement of the bridge. For safety of the motoring public, if the Tribe decides not to pursue the bridge project, the BIA shall work with the Tribe to either reduce the bridge's load rating or close the bridge, and remove it from the IRR inventory in accordance with 25 CFR part 170 (170.813).

[FR Doc. E8–6007 Filed 3–24–08; 8:45 am]

BILLING CODE 4910–22–P

DEPARTMENT OF THE TREASURY

Internal Revenue Service

26 CFR Part 1

[TD 9386]

RIN 1545–BE80

Abandonment of Stock or Other Securities; Correction

AGENCY: Internal Revenue Service (IRS), Treasury.

ACTION: Final regulations; correction.

SUMMARY: This document contains a correction to final regulations (TD 9386) that were published in the **Federal Register** on Wednesday, March 12, 2008 (73 FR 13124) concerning the availability and character of a loss deduction under section 165 of the Internal Revenue Code for losses sustained from abandoned stock or other securities. These regulations clarify the tax treatment of losses from abandoned securities, and affect any taxpayer claiming a deduction for a loss from abandoned securities.

DATES: The correction is effective March 25, 2008.

FOR FURTHER INFORMATION CONTACT: Sean M. Dwyer at (202) 622–5020 or Peter C. Meisel at (202) 622–7750 (not toll-free numbers).

SUPPLEMENTARY INFORMATION:

Background

The final regulations (TD 9386) that are the subject of the correction are under section 165 of the Internal Revenue Code.

Need for Correction

As published, final regulations (TD 9386) contain an error that may prove to be misleading and is in need of clarification.

Correction of Publication

Accordingly, the publication of the final regulations (TD 9386), which were the subject of FR Doc. E8–4862, is corrected as follows:

On page 13124, column 2, in the preamble, under the paragraph heading ''Background'', the language ''A statement in the preamble to the proposed regulations requires clarification. The preamble described section 165(g)(3) as providing an exception from capital loss treatment for certain worthless securities in a domestic corporation affiliated with the taxpayer. Section 165(g)(3) provides an exception from capital loss treatment for a taxpayer that is a domestic corporation that owns certain worthless securities of a domestic or foreign corporation affiliated with the taxpayer. See § 1.165–5(d)(1) of the Income Tax Regulations.'' is inserted as a second paragraph.

LaNita Van Dyke,

Chief, Publications and Regulations Branch, Legal Processing Division, Associate Chief Counsel, (Procedure and Administration).

[FR Doc. E8–6038 Filed 3–24–08; 8:45 am]

BILLING CODE 4830–01–P

DEPARTMENT OF THE TREASURY

Internal Revenue Service

26 CFR Part 301

[TD 9389]

RIN 1545–BG74

Disclosure of Return Information in Connection with Written Contracts Among the IRS, Whistleblowers, and Legal Representatives of Whistleblowers

AGENCY: Internal Revenue Service (IRS), Treasury.

ACTION: Temporary regulations.

SUMMARY: This document contains temporary regulations relating to the disclosure of return information, pursuant to section 6103(n) of the Internal Revenue Code (Code), by an officer or employee of the Treasury Department, to a whistleblower and, if applicable, the legal representative of the whistleblower, to the extent necessary in connection with a written contract among the IRS, the whistleblower and, if applicable, the legal representative of the whistleblower, for services relating to the detection of violations of the internal revenue laws or related statutes. The temporary regulations will affect officers and employees of the Treasury Department who disclose return information to whistleblowers, or their legal representatives, in connection with written contracts among the IRS, whistleblowers and, if applicable, their legal representatives, for services relating to the detection of violations of the internal revenue laws or related statutes. The temporary regulations will also affect any whistleblower, or legal representative of a whistleblower, who receives return information in connection with a written contract among the IRS, the whistleblower and, if applicable, the legal representative of the whistleblower, for services relating to the detection of violations of the internal revenue laws or related statutes. The text of the temporary regulations also serves as the text of the proposed regulations set forth in the notice of proposed rulemaking on this subject in the Proposed Rules section in this issue of the **Federal Register**.

DATES: *Effective Date:* These temporary regulations are effective on *March 25, 2008*.

Applicability Date: For dates of applicability, see § 301.6103(n)–2T(f).

FOR FURTHER INFORMATION CONTACT: Helene R. Newsome, 202–622–7950 (not a toll-free number).

SUPPLEMENTARY INFORMATION:

Background

This document contains amendments to the Procedure and Administration Regulations (26 CFR part 301) under section 6103(n) relating to the disclosure of return information in connection with written contracts among the IRS, whistleblowers and, if applicable, their legal representatives.

The Tax Relief and Health Care Act of 2006, Public Law 109–432 (120 Stat. 2958), (the Act) was enacted on December 20, 2006. Section 406 of the Act amends section 7623, concerning the payment of awards to whistleblowers, and establishes a Whistleblower Office within the IRS that has responsibility for the administration of a whistleblower program. The Whistleblower Office, in connection with administering a whistleblower program, will analyze information provided by a

whistleblower, and either investigate the matter itself or assign it to the appropriate IRS office for investigation. In analyzing information provided by a whistleblower, or investigating a matter, the Whistleblower Office may determine that it requires the assistance of the whistleblower, or the legal representative of the whistleblower. The legislative history of section 406 of the Act states that ''[t]o the extent the disclosure of returns or return information is required [for the whistleblower or his or her legal representative] to render such assistance, the disclosure must be pursuant to an IRS tax administration contract.'' Joint Committee on Taxation, *Technical Explanation of H.R. 6408, The ''Tax Relief and Health Care Act of 2006,''* as Introduced in the House on December 7, 2006, at 89 (JCX–50–06), December 7, 2006. The legislative history further states that ''[i]t is expected that such disclosures will be infrequent and will be made only when the assigned task cannot be properly or timely completed without the return information to be disclosed.'' *Id.*

Under section 6103(a), returns and return information are confidential unless the Internal Revenue Code (Code) authorizes disclosure. Section 6103(n) is the authority by which returns and return information may be disclosed pursuant to a tax administration contract. Section 6103(n) authorizes, pursuant to regulations prescribed by the Secretary, returns and return information to be disclosed to any person, including any person described in section 7513(a), for purposes of tax administration, to the extent necessary in connection with: (1) The processing, storage, transmission, and reproduction of returns and return information; (2) the programming, maintenance, repair, testing, and procurement of equipment; and (3) the providing of other services. These temporary regulations describe the circumstances, pursuant to section 6103(n), under which officers and employees of the Treasury Department may disclose return information to whistleblowers and, if applicable, their legal representatives, in connection with written contracts for services relating to the detection of violations of the internal revenue laws or related statutes.

Explanation of Provisions

General Rule

The temporary regulations, at § 301.6103(n)–2T(a)(1), provide that an officer or employee of the Treasury Department may, pursuant to sections 6103(n) and 7623, disclose return information to a whistleblower and, if applicable, the legal representative of the whistleblower, to the extent necessary in connection with a written contract among the IRS, the whistleblower and, if applicable, the legal representative of the whistleblower, for services relating to the detection of violations of the internal revenue laws or related statutes. If a whistleblower has retained the services of a legal representative, then, in addition to the whistleblower, the whistleblower's legal representative must be a party to the written contract with the IRS. These temporary regulations do not provide for the disclosure of returns to whistleblowers or their legal representatives.

The temporary regulations, at § 301.6103(n)–2T(a)(2), provide that the Commissioner has the discretion to determine whether to enter into a written contract with the whistleblower and, if applicable, the legal representative of the whistleblower, for services as described in § 301.6103(n)–2T(a)(1). The IRS expects to enter into these contracts only infrequently, and any contract that is entered into, and any disclosures made pursuant to this type of contract, will be carefully tailored to the specific facts of the case.

Limitations

The temporary regulations, at § 301.6103(n)–2T(b)(1), set forth the condition that the disclosure of return information in connection with a written contract for services described in § 301.6103(n)–2T(a)(1) may be made only to the extent the IRS deems it necessary in connection with the reasonable or proper performance of the contract. In this regard, disclosures should relate to relevant taxable years and types of tax. The temporary regulations, at § 301.6103–2T(b)(2), set forth the additional condition that if the IRS determines that the services of a whistleblower and, if applicable, the legal representative of the whistleblower as described in § 301.6103(n)–2T(a)(1) can be performed reasonably or properly by disclosure of only parts or portions of return information, then only the parts or portions of the return information are to be disclosed.

The temporary regulations, at § 301.6103(n)–2T(b)(3), provide that, upon written request by a whistleblower, or a legal representative of a whistleblower, with whom the IRS has entered into a written contract for services as described in § 301.6103(n)–2T(a)(1), the Director of the Whistleblower Office, or designee of the Director, may inform the whistleblower and, if applicable, the legal representative of the whistleblower, of the status of the whistleblower's claim for award under section 7623, including whether the claim is being evaluated for potential investigative action, or is pending due to an ongoing examination, appeal, collection action, or litigation. This information may be disclosed only if the Commissioner determines that the disclosure would not seriously impair Federal tax administration.

The temporary regulations, at § 301.6103(n)–2T(b)(4), impose the condition that return information disclosed to a whistleblower and, if applicable, a legal representative of a whistleblower, may not be disclosed or otherwise used by the whistleblower or a legal representative of a whistleblower, except as expressly authorized by the IRS.

Penalties

The temporary regulations, at § 301.6103(n)–2T(c), set forth the civil and criminal penalties to which whistleblowers and their legal representatives are subject for unauthorized inspection or disclosure of return information by operation of sections 7431(a)(2), 7213(a)(1), and 7213A(a)(1)(B).

Safeguards

The temporary regulations, at § 301.6103(n)–2T(d)(1), provide that whistleblowers and their legal representatives who receive return information under these regulations must comply with all applicable conditions and requirements as the IRS may prescribe from time to time (prescribed requirements) for the purposes of protecting the confidentiality of the return information and preventing unauthorized disclosures and inspections of the return information (for example, requirements pertaining to computer security, physical security of return information, methods of destruction of return information).

The temporary regulations, at § 301.6103(n)–2T(d)(2), provide that any written contract for services as described in § 301.6103(n)–2T(a)(1) must provide that any whistleblower and, if applicable, the legal representative of a whistleblower, who has access to return information under these regulations shall comply with the prescribed requirements.

The temporary regulations, at § 301.6103(n)–2T(d)(3), impose the requirement that whistleblowers, and their legal representatives who receive return information under these regulations, must agree in writing, before any disclosure of return information is made, to permit an

inspection of their premises by the IRS relative to the maintenance of the return information disclosed to them under these regulations and, upon completion of services as described in the written contract with the IRS, to dispose of all return information by returning the return information, including any and all copies or notes made, to the IRS, or to the extent that it cannot be returned, by destroying the information in a manner consistent with security guidelines and other safeguards for protecting return information in guidance published by the IRS.

The temporary regulations, at § 301.6103(n)–2T(d)(4), provide that if the IRS determines that any whistleblower, or the legal representative of a whistleblower, who has access to return information under these regulations, has failed to, or does not, satisfy the prescribed requirements, the IRS, using the procedures described in the regulations under section 6103(p)(7), may take any action it deems necessary to ensure that the prescribed requirements are or will be satisfied.

Special Analyses

It has been determined that this Treasury decision is not a significant regulatory action as defined in Executive Order 12866. Therefore, a regulatory assessment is not required. It also has been determined that section 553(b) of the Administrative Procedure Act (5 U.S.C. chapter 5) does not apply to these regulations. For the applicability of the Regulatory Flexibility Act (5 U.S.C. chapter 6) refer to the Special Analyses section of the preamble to the cross-reference notice of proposed rulemaking published in the Proposed Rules section in this issue of the **Federal Register**. Pursuant to section 7805(f) of the Code, these regulations have been submitted to the Chief Counsel for Advocacy of the Small Business Administration for comment on its impact on small business.

Drafting Information

The principal author of these regulations is Helene R. Newsome, Office of the Associate Chief Counsel (Procedure & Administration).

List of Subjects in 26 CFR Part 301

Employment taxes, Estate taxes, Excise taxes, Gift taxes, Income taxes, Penalties, Reporting and recordkeeping requirements.

Amendments to the Regulations

■ Accordingly, 26 CFR part 301 is amended as follows:

PART 301—PROCEDURE AND ADMINISTRATION

■ **Paragraph 1.** The authority citation for part 301 is amended by adding an entry in numerical order to read as follows:

Authority: 26 U.S.C. 7805 * * *
Section 301.6103(n)–2T also issued under 26 U.S.C. 6103(n); * * *

■ **Par. 2.** Section 301.6103(n)–2T is added to read as follows:

§ 301.6103(n)–2T Disclosure of return information in connection with written contracts among the IRS, whistleblowers, and legal representatives of whistleblowers (temporary).

(a) *General rule.* (1) Pursuant to the provisions of sections 6103(n) and 7623 of the Internal Revenue Code and subject to the conditions of this section, an officer or employee of the Treasury Department is authorized to disclose return information (as defined in section 6103(b)(2)) to a whistleblower and, if applicable, the legal representative of the whistleblower, to the extent necessary in connection with a written contract among the Internal Revenue Service (IRS), the whistleblower and, if applicable, the legal representative of the whistleblower, for services relating to the detection of violations of the internal revenue laws or related statutes.

(2) The Commissioner shall have the discretion to determine whether to enter into a written contract pursuant to section 7623 with the whistleblower and, if applicable, the legal representative of the whistleblower for services described in paragraph (a)(1) of this section.

(b) *Limitations.* (1) Disclosure of return information in connection with a written contract for services described in paragraph (a)(1) of this section shall be made only to the extent the IRS deems it necessary in connection with the reasonable or proper performance of the contract. Disclosures may include, but are not limited to, disclosures to accomplish properly any purpose or activity of the nature described in section 6103(k)(6) and the regulations thereunder.

(2) If the IRS determines that the services of a whistleblower and, if applicable, the legal representative of the whistleblower, as described in paragraph (a)(1) of this section can be performed reasonably or properly by disclosure of only parts or portions of return information, then only the parts or portions of the return information shall be disclosed.

(3) Upon written request by a whistleblower, or a legal representative of a whistleblower, with whom the IRS has entered into a written contract for services as described in paragraph (a)(1) of this section, the Director of the Whistleblower Office, or designee of the Director, may inform the whistleblower and, if applicable, the legal representative of the whistleblower, of the status of the whistleblower's claim for award under section 7623, including whether the claim is being evaluated for potential investigative action, or is pending due to an ongoing examination, appeal, collection action, or litigation. The information may be disclosed only if the Commissioner determines that the disclosure would not seriously impair Federal tax administration.

(4) Return information disclosed to a whistleblower and, if applicable, a legal representative of a whistleblower, under this section, shall not be disclosed or otherwise used by the whistleblower or a legal representative of a whistleblower, except as expressly authorized in writing by the Director of the Whistleblower Office.

(c) *Penalties.* Any whistleblower, or legal representative of a whistleblower, who receives return information under this section, is subject to the civil and criminal penalty provisions of sections 7431, 7213, and 7213A for the unauthorized inspection or disclosure of the return information.

(d) *Safeguards.* (1) Any whistleblower, or the legal representative of a whistleblower, who receives return information under this section, shall comply with all applicable conditions and requirements as the IRS may prescribe from time to time (prescribed requirements) for the purposes of protecting the confidentiality of the return information and preventing any disclosure or inspection of the return information in a manner not authorized by this section.

(2) Any written contract for services as described in paragraph (a)(1) of this section shall provide that any whistleblower and, if applicable, the legal representative of a whistleblower, who has access to return information under this section, shall comply with the prescribed requirements.

(3) Any whistleblower, or the legal representative of a whistleblower, who may receive return information under this section, shall agree in writing, before any disclosure of return information is made, to permit an inspection of his or her premises by the IRS relative to the maintenance of the return information disclosed under these regulations and, upon completion of services as described in the written contract with the IRS, to dispose of all return information by returning the return information, including any and

all copies or notes made, to the IRS, or to the extent that it cannot be returned, by destroying the information in a manner consistent with security guidelines and other safeguards for protecting return information in guidance published by the IRS.

(4) If the IRS determines that any whistleblower, or the legal representative of a whistleblower, who has access to return information under this section, has failed to, or does not, satisfy the prescribed requirements, the IRS, using the procedures described in the regulations under section 6103(p)(7), may take any action it deems necessary to ensure that the prescribed requirements are or will be satisfied, including—

(i) Suspension of further disclosures of return information by the IRS to the whistleblower and, if applicable, the legal representative of the whistleblower, until the IRS determines that the conditions and requirements have been or will be satisfied; and

(ii) Suspension or termination of any duty or obligation arising under a contract with the IRS.

(e) *Definitions.* For purposes of this section—

(1) The term *Treasury Department* includes the IRS and the Office of the Chief Counsel for the IRS.

(2) The term *whistleblower* means an individual who provides information to the IRS regarding violations of the tax laws or related statutes and submits a claim for an award under section 7623 with respect to the information.

(3) The term *legal representative* means any individual who is a member in good standing in the bar of the highest court of any state, possession, territory, commonwealth, or the District of Columbia, and who has a written power of attorney executed by the whistleblower.

(f) *Effective/applicability date.* This section is applicable on *March 25, 2008.*

(g) *Expiration date.* This section will expire on March 24, 2011.

Linda E. Stiff,

Deputy Commissioner for Services and Enforcement.

Approved: March 12, 2008.

Eric Solomon,

Assistant Secretary of the Treasury (Tax Policy).

[FR Doc. E8–6067 Filed 3–24–08; 8:45 am]

BILLING CODE 4830–01–P

DEPARTMENT OF THE TREASURY

Office of the Secretary

31 CFR Part 1

Privacy Act; Implementation

AGENCY: Office of the Secretary, Treasury.

ACTION: Final rule.

SUMMARY: In accordance with the requirements of the Privacy Act of 1974, as amended, the Department of the Treasury gives notice of a final rule to exempt an Internal Revenue Service system of records entitled ''Treasury/IRS 42.002—Excise Compliance Programs'' from certain provisions of the Privacy Act.

DATES: *Effective Date:* March 25, 2008.

FOR FURTHER INFORMATION CONTACT: Telephonic inquiries should be directed to David Silverman, Tax Law Specialist, Internal Revenue Service at (202) 283–7382.

SUPPLEMENTARY INFORMATION: The Department of the Treasury published a notice of a proposed rule exempting a system of records from certain provisions of the Privacy Act of 1974, as amended. The Internal Revenue Service (IRS) published the Privacy Act system of records notice in its entirety on November 8, 2006, at 71 FR 65570, and the proposed rule on November 9, 2006 at 71 FR 65763.

Under 5 U.S.C. 552a(k)(2), the head of an agency may promulgate rules to exempt any system of records within the agency from certain provisions of the Privacy Act of 1974, as amended, if the system is investigatory material compiled for law enforcement purposes. Treasury/IRS 42.002—Excise Compliance Programs contains investigatory material compiled for law enforcement purposes.

The proposed rule requested that public comments be sent to the Office of Governmental Liaison and Disclosure, 1111 Constitution Avenue, NW, Washington, DC 20224, no later than December 11, 2006.

The IRS did not receive comments on the proposed rule. Accordingly, the Department of the Treasury is hereby giving notice that the system of records entitled ''Treasury/IRS 42.002—Excise Compliance Programs'' is exempt from certain provisions of the Privacy Act.

The provisions of the Privacy Act from which the system of records is exempt pursuant to 5 U.S.C. 552a(k)(2) are as follows: 5 U.S.C. 552a(c)(3), (d)(1), (2), (3) and (4), (e)(1), (e)(4)(G), (e)(4)(H) and (e)(4)(I), and (f).

As required by Executive Order 12866, it has been determined that this proposed rule is not a significant regulatory action, and therefore, does not require a regulatory impact analysis.

The regulation will not have a substantial direct effect on the States, on the relationship between the Federal Government and the States, or on the distribution of power and responsibilities among the various levels of government. Therefore, it is determined that this final rule does not have federalism implications under Executive Order 13132.

Pursuant to the requirements of the Regulatory Flexibility Act, 5 U.S.C. 601–612, it is hereby certified that these regulations will not significantly affect a substantial number of small entities. The final rule imposes no duties or obligations on small entities.

In accordance with the provisions of the Paperwork Reduction Act of 1995, the Department of the Treasury has determined that this final rule would not impose new record keeping, application, reporting, or other types of information collection requirements.

List of Subjects in 31 CFR Part 1

Privacy.

■ Part 1, subpart C of title 31 of the Code of Federal Regulations is amended as follows:

PART 1—[AMENDED]

■ 1. The authority citation for part 1 continues to read as follows:

Authority: 5 U.S.C. 301 and 31 U.S.C. 321. Subpart A also issued under 5 U.S.C. 552 as amended. Subpart C also issued under 5 U.S.C. 552a.

■ 2. Section 1.36 paragraph (g)(1)(viii) is amended by adding the following text to the table in numerical order.

§ 1.36 Systems exempt in whole or in part from provisions of 5 U.S.C. 522a and this part.

* * * * *

(g) * * *

(1) * * *

(viii) * * *

System No.	Name of system
* * * * *	
IRS 42.002	Excise Compliance Programs.
* * * * *	

Dated: March 11, 2008.

Peter B. McCarthy,

Assistant Secretary for Management and Chief Financial Officer.

[FR Doc. E8–5980 Filed 3–24–08; 8:45 am]

BILLING CODE 4830–01–P

ENVIRONMENTAL PROTECTION AGENCY

40 CFR Part 52

[EPA–R02–OAR–2008–0078; FRL–8546–2]

Determinations of Attainment of the Eight-Hour Ozone Standard for Various Ozone Nonattainment Areas in Upstate New York State

AGENCY: Environmental Protection Agency (EPA).

ACTION: Final rule.

SUMMARY: The EPA is determining that three ozone nonattainment areas in New York, the Albany-Schenectady-Troy, Jefferson County and Rochester areas, have attained the 8-hour National Ambient Air Quality Standard (NAAQS) for ozone. This determination is based upon certified ambient air monitoring data that show each area has monitored attainment of the 8-hour ozone NAAQS based on complete, quality-assured ambient air monitoring data for the three year period ending in 2006. In addition, data for 2007 show that the areas continue to attain the standard. This determination suspends any applicable requirements for these areas to submit an attainment demonstration, a reasonable further progress plan, contingency measures, and other planning State Implementation Plans related to attainment of the 8-hour ozone NAAQS. These requirements shall remain suspended for so long as these areas continue to attain the ozone NAAQS. New York proposed that Essex County had also attained the 8-hour ozone standard, but because of incomplete data, a determination of attainment cannot be made at this time.

DATES: *Effective Date:* This rule is effective on March 25, 2008.

ADDRESSES: EPA has established a docket for this action under Docket Identification No. EPA–R02–OAR–2008–0078. All documents in the docket are listed on the *http://www.regulations.gov* Web site. Although listed in the index, some information is not publicly available, i.e., CBI or other information whose disclosure is restricted by statute. Certain other material, such as copyrighted material, is not placed on the Internet and will be publicly available only in hard copy form. Publicly available docket materials are available either electronically through *http://www.regulations.gov* or in hard copy at the Air Programs Branch, U.S. Environmental Protection Agency, Region 2, 290 Broadway, 25th Floor, New York, New York 10007–1866. To make your visit as productive as possible, contact the person listed in the **FOR FURTHER INFORMATION CONTACT** section to schedule your inspection. The Regional Office's official hours of business are Monday through Friday, 8:30 to 4:30, excluding legal holidays.

FOR FURTHER INFORMATION CONTACT: Robert F. Kelly, Air Programs Branch, Environmental Protection Agency, Region 2, 290 Broadway, 25th Floor, New York, New York 10007–1866, telephone number (212) 637–4249, fax number (212) 637–3901, e-mail *kelly.bob@epa.gov.*

SUPPLEMENTARY INFORMATION:

Table of Contents

I. EPA's Action
II. The Effect of EPA's Action
III. The Effective Date of EPA's Action
IV. Final Action
V. Statutory and Executive Order Reviews

I. EPA's Action

EPA is determining that the Albany-Schenectady-Troy, Jefferson County and Rochester 8-hour ozone nonattainment areas have attained the 8-hour National Ambient Air Quality Standard (NAAQS) for ozone. These determinations are based upon certified ambient air monitoring data that show the areas have monitored attainment of the ozone NAAQS for the three-year period from 2004 to 2006. In addition, based on quality controlled and quality assured ozone data, these areas continued to attain the ozone NAAQS in 2007, the most recent year of data available. All these data are available in the EPA Air Quality System (AQS) database. Essex County did not have enough complete data to make a determination of attainment at this time.

Other specific requirements of the determination and the rationale for EPA's proposed action are explained in the Notice of Proposed Rulemaking (NPR) published on February 14, 2008 (73 FR 8638) and will not be restated here. No public comments were received on the NPR.

II. The Effect of EPA's Action

Under the provisions of EPA's ozone implementation rule (see 40 CFR 51.918), this determination suspends the requirements for the Albany-Schenectady-Troy, Jefferson County and Rochester ozone nonattainment areas to submit an attainment demonstration, a reasonable further progress plan, section 172(c)(9) contingency measures, and any other planning State Implementation Plans (SIPs) related to attainment of the 8-hour ozone NAAQS for so long as these areas continue to attain the ozone NAAQS.

This action does not constitute a redesignation to attainment under Clean Air Act (CAA) section 107(d)(3), because these areas do not have approved maintenance plans as required under section 175A of the CAA, nor are there determinations that the areas have met the other requirements for redesignation. The classification and designation status of these areas will not change from nonattainment for the 8-hour ozone NAAQS until such time as EPA determines that they meet the CAA requirements for redesignation to attainment.

If EPA subsequently determines, after notice-and-comment rulemaking in the **Federal Register**, that any of these areas has violated the current 8-hour ozone standard, the basis for the suspension of these requirements would no longer exist for that area, and the area that violated the 8-hour standard would have to address the pertinent requirements.

III. The Effective Date of EPA's Action

EPA finds that there is good cause for this approval to become effective on the date of publication of this action in the **Federal Register**, because a delayed effective date is unnecessary due to the nature of the approval. The expedited effective date for this action is authorized under both 5 U.S.C. 553(d)(1), which provides that rule actions may become effective less than 30 days after publication if the rule ''grants or recognizes an exemption or relieves a restriction'' and 5 U.S.C. 553(d)(3), which allows an effective date less than 30 days after publication ''as otherwise provided by the agency for good cause found and published with the rule.'' As noted above, this determination of attainment suspends the requirements for New York to submit attainment demonstrations, reasonable further progress plans, section 172(c)(9) contingency measures, and any other planning SIPs related to attainment of the 8-hour ozone NAAQS in each of these areas for so long as an area continues to attain the ozone NAAQS. The suspension of these requirements is sufficient reason to allow an expedited effective date of this rule under 5 U.S.C. 553(d)(1). In addition, New York's suspension from these requirements provides good cause to make this rule effective on the date

of publication of this action in the **Federal Register**, pursuant to 5 U.S.C. 553(d)(3). The purpose of the 30-day waiting period prescribed in 5 U.S.C. 553(d) is to give affected parties a reasonable time to adjust their behavior and prepare before the final rule takes effect. Where, as here, the final rule suspends requirements rather than imposing obligations, affected parties, such as the State of New York, do not need time to adjust and prepare before the rule takes effect.

IV. Final Action

EPA is determining that the Albany-Schenectady-Troy, Jefferson County and Rochester 8-hour ozone nonattainment areas have attained the 8-hour ozone standard and continue to attain the standard based on data through the 2007 ozone season. As provided in 40 CFR 51.918, this determination suspends the requirements for New York to submit attainment demonstrations, reasonable further progress plans, and contingency measures under section 172(c)(9), and any other planning SIP related to attainment of the 8-hour ozone NAAQS for these areas. If one or more of these areas no longer attains the standard, that area or areas would have to submit the required SIP planning elements required by the CAA for each particular area. EPA is codifying this determination in 40 CFR 52.1683 as a new paragraph (f)(2). The existing text of paragraph (f) has been designated as (f)(1) without any changes.

V. Statutory and Executive Order Reviews

Under Executive Order 12866 (58 FR 51735, October 4, 1993), this action is not a ''significant regulatory action'' and therefore is not subject to review by the Office of Management and Budget. For this reason, this action is also not subject to Executive Order 13211, ''Actions Concerning Regulations That Significantly Affect Energy Supply, Distribution, or Use'' (66 FR 28355, May 22, 2001). This action makes a determination based on air quality data, and results in the suspension of certain Federal requirements. Accordingly, the Administrator certifies that this rule will not have a significant economic impact on a substantial number of small entities under the Regulatory Flexibility Act (5 U.S.C. 601 *et seq.*). Because this rule makes a determination based on air quality data, and results in the suspension of certain Federal requirements, it does not contain any unfunded mandate or significantly or uniquely affect small governments, as described in the Unfunded Mandates Reform Act of 1995 (Pub. L. 104–4).

This rule also does not have tribal implications because it will not have a substantial direct effect on one or more Indian tribes, on the relationship between the Federal Government and Indian tribes, or on the distribution of power and responsibilities between the Federal Government and Indian tribes, as specified by Executive Order 13175 (65 FR 67249, November 9, 2000). This action also does not have Federalism implications because it does not have substantial direct effects on the States, on the relationship between the national government and the States, or on the distribution of power and responsibilities among the various levels of government, as specified in Executive Order 13132 (64 FR 43255, August 10, 1999), because it merely makes a determination based on air quality data and results in the suspension of certain Federal requirements, and does not alter the relationship or the distribution of power and responsibilities established in the Clean Air Act. This rule also is not subject to Executive Order 13045 ''Protection of Children from Environmental Health Risks and Safety Risks'' (62 FR 19885, April 23, 1997), because it determines that air quality in the affected area is meeting Federal standards.

The requirements of section 12(d) of the National Technology Transfer and Advancement Act of 1995 (15 U.S.C. 272 note) do not apply because it would be inconsistent with applicable law for EPA, when determining the attainment status of an area, to use voluntary consensus standards in place of promulgated air quality standards and monitoring procedures that otherwise satisfy the provisions of the Clean Air Act.

This rule does not impose an information collection burden under the provisions of the Paperwork Reduction Act of 1995 (44 U.S.C. 3501 *et seq.*)

Under Executive Order 12898, EPA finds that this rule involves a determination of attainment based on air quality data and will not have disproportionately high and adverse human health or environmental effects on any communities in the area, including minority and low-income communities.

The Congressional Review Act, 5 U.S.C. 801 *et seq.*, as added by the Small Business Regulatory Enforcement Fairness Act of 1996, generally provides that before a rule may take effect, the agency promulgating the rule must submit a rule report, which includes a copy of the rule, to each House of the Congress and to the Comptroller General of the United States. EPA will submit a report containing this rule and other required information to the U.S. Senate, the U.S. House of Representatives, and the Comptroller General of the United States prior to publication of the rule in the **Federal Register**. A major rule cannot take effect until 60 days after it is published in the **Federal Register**. This action is not a ''major rule'' as defined by 5 U.S.C. 804(2).

Under section 307(b)(1) of the Clean Air Act, petitions for judicial review of this action must be filed in the United States Court of Appeals for the appropriate circuit by May 27, 2008. Filing a petition for reconsideration by the Administrator of this final rule does not affect the finality of this rule for the purposes of judicial review nor does it extend the time within which a petition for judicial review may be filed, and shall not postpone the effectiveness of such rule or action. This action may not be challenged later in proceedings to enforce its requirements. (See section 307(b)(2).)

List of Subjects in 40 CFR Part 52

Environmental protection, Air pollution control, Carbon monoxide, Incorporation by reference, Intergovernmental relations, Nitrogen dioxide, Ozone, Reporting and recordkeeping requirements, Volatile organic compounds.

Dated: March 18, 2008.

Alan J. Steinberg,

Regional Administrator, Region 2.

■ Part 52 of chapter I, title 40 of the Code of Federal Regulations is amended as follows:

PART 52—[AMENDED]

■ 1. The authority citation for part 52 continues to read as follows:

Authority: 42 U.S.C. 7401 *et seq.*

Subpart HH—New York

■ 2. Section 52.1683 is amended by revising paragraph (f) to read as follows:

§ 52.1683 Control strategy: Ozone.

* * * * *

(f) Attainment Determination. (1) EPA has determined that, as of February 5, 1998, the Poughkeepsie ozone nonattainment area (consisting of Dutchess and Putnam Counties and northern Orange County) has air monitoring data that attains the one-hour ozone standard and that the requirements of section 182(b)(1) (reasonable further progress and attainment demonstration) and related requirements of section 172(c)(9) (contingency measures) of the Clean Air Act do not apply to the area.

(2) EPA is determining that the 8-hour ozone nonattainment areas in New York listed below have attained the 8-hour ozone standard on the date listed. Under the provisions of EPA's ozone implementation rule (see 40 CFR 51.918), this determination suspends the reasonable further progress and attainment demonstration requirements of section 182(b)(1) and related requirements of section 172(c)(9) of the Clean Air Act for each of these areas as long as the area does not monitor any violations of the 8-hour ozone standard. If a violation of the ozone NAAQS is monitored this determination shall no longer apply in the area where the violation occurs.

(i) Albany-Schenectady-Troy (consisting of Albany, Greene, Montgomery, Rensselaer, Saratoga, Schenectady, and Schoharie Counties) as of March 25, 2008,

(ii) Jefferson County, as of March 25, 2008, and

(iii) Rochester (consisting of Genesee, Livingston, Monroe, Ontario, Orleans and Wayne Counties) as of March 25, 2008.

* * * * *

[FR Doc. E8–6027 Filed 3–24–08; 8:45 am]

BILLING CODE 6560–50–P

DEPARTMENT OF COMMERCE

National Oceanic and Atmospheric Administration

50 CFR Part 622

[Docket No. 970730185–7206–02]

RIN 0648–XG40

Fisheries of the Caribbean, Gulf of Mexico, and South Atlantic; Reef Fish Fishery of the Gulf of Mexico; Closure of the 2008 Gulf of Mexico Recreational Fishery for Red Snapper

AGENCY: National Marine Fisheries Service (NMFS), National Oceanic and Atmospheric Administration (NOAA), Commerce.

ACTION: Temporary rule; closure.

SUMMARY: NMFS closes the recreational fishery for red snapper in the exclusive economic zone (EEZ) of the Gulf of Mexico (Gulf). NMFS has determined this action is necessary to prevent the recreational fishery from exceeding its quota for the fishing year. This closure is necessary to prevent overfishing of Gulf red snapper.

DATES: The closure is effective 12:01 a.m., local time, August 5, 2008, through December 31, 2008, the end of the current fishing year. The recreational fishery will reopen on June 1, 2009, the beginning of the 2009 recreational fishing season.

FOR FURTHER INFORMATION CONTACT: Dr. Steve Branstetter, telephone 727–551–5796, fax 727–824–5308, e-mail *Steve.Branstetter@noaa.gov*.

SUPPLEMENTARY INFORMATION: The red snapper fishery of the Gulf of Mexico is managed under the Fishery Management Plan for the Reef Fish Resources of the Gulf of Mexico (FMP). The FMP was prepared by the Gulf of Mexico Fishery Management Council (Council) and is implemented under the authority of the Magnuson-Stevens Fishery Conservation and Management Act (Magnuson-Stevens Act) by regulations at 50 CFR part 622.

Background

The final rule implementing the approved actions in joint Amendment 27 to the FMP and Amendment 14 to the Fishery Management Plan for the Shrimp Fishery of the Gulf of Mexico (Amendment 27/14) (73 FR 5117, January 29, 2008) is intended to end overfishing and rebuild the red snapper stock in the Gulf of Mexico. In part, the final rule reduced the 2008 recreational quota for red snapper to 2.45 million lb (1.11 million kg). To constrain the recreational fishery's harvest to the quota, the recreational daily bag limit was revised to two fish per person and the daily bag limit for captains and crews of for-hire vessels was reduced to zero. The recreational minimum size limit remained at 16 inches (40.6 cm) total length (TL). The Federal red snapper recreational fishing season was reduced to June 1 through September 30. These recreational management measures, in combination, were projected to constrain red snapper harvest to the 2.45 million lb (1.11 million kg) recreational quota based on the assumption all five Gulf states would adopt compatible regulations.

Previously, in 2007, NMFS implemented temporary rules (72 FR 15617, April 2, 2007; 72 FR 54223, September 24, 2007) to initiate reductions in harvest and fishing mortality on the overfished red snapper stock until the more permanent regulations above could be established. The temporary regulations included a recreational quota of 3.185 million lb (1.445 million kg), a two-fish bag limit, a zero-fish bag limit captains and crews of for-hire vessels, a 16–inch (40.6 cm) TL minimum size limit, and a recreational fishing season of April 21 through October 31. These harvesting restrictions were intended to have a 50–percent probability of constraining recreational harvest to the recreational quota, and also assumed implementation of compatible state regulations throughout the Gulf.

Substantial quantities of red snapper are harvested by the recreational fishery from state waters. This is particularly true for Florida and Texas where state jurisdiction extends 9 nautical miles. State water recreational harvest of red snapper is much more limited off Mississippi, Alabama, and Louisiana, in part due to their more limited 3 nautical-mile jurisdiction. Reported recreational red snapper landings in state waters off the west coast of Florida in 2007 represented more than 25 percent of the total Gulf recreational red snapper landings, and more than 50 percent of the total recreational landings for the state. Although the quantity of recreational red snapper landed from state waters off Texas is only approximately 4.5 percent of the total recreational quota, landings from state waters constitute more than 30 percent of Texas' total recreational landings. During 2007, the Texas Parks and Wildlife Department (TPWD) kept Texas state waters open year-round compared to the restricted Federal season, and anglers were allowed a daily bag limit of four fish compared to the two-fish bag limit in Federal waters. The Florida Fish and Wildlife Conservation Commission (FWC) maintained a fishing season of April 15 through October 31 during 2007 in its state waters, and a four-fish recreational bag limit compared to a two-fish bag limit in Federal waters. These incompatible regulations in state waters contributed to a total recreational harvest that was estimated to exceed the recreational red snapper quota by approximately 1.0 million lb (453,592 kg) in 2007.

To ensure the 2008 recreational red snapper quota would not be exceeded, NMFS and the Council requested the five Gulf states adopt regulations compatible with Federal regulations implemented for red snapper during the 2008 fishing year. In response, the FWC implemented regulations for Florida state waters that allow anglers to possess two fish per day and prohibited retention by captain or crew of for-hire vessels, compatible with Federal regulations, but maintained its recreational fishing season of April 15 through October 31; 78 days longer than the existing June 1 through September 30 Federal fishing season. The TPWD maintained its existing regulations of a year-round fishing season and a four-fish bag limit in Texas state waters.

The ramifications of incompatible state regulations for the Federal red snapper fishery are significant. The

existing regulations for Federal waters were based on the assumption of compatible state regulations. The Magnuson-Stevens Act requires NMFS to specify a recreational red snapper quota and to close the recreational fishery when the quota is met. Constraining harvest to the quota is crucial to meeting the legal requirements to prevent and end overfishing of the overfished red snapper resource of the Gulf of Mexico, and achieve rebuilding targets. With less restrictive regulations in state waters, the likelihood is increased for the recreational red snapper quota to be taken before the end of the existing June 1 through September 30 Federal fishing season.

Because of this concern, NMFS conducted an analysis to project 2008 red snapper recreational landings in accordance with the established Federal and state recreational fishing seasons and harvesting restrictions. These projections were necessary because only one month of landings data, June, will be available by mid-August for the 2008 Federal recreational red snapper fishery. If landings are higher than anticipated, because of less restrictive state regulations, it would be difficult to close the fishery in a timely fashion. Therefore, historical landings were used to project both landings and season length for each state by sector (charter, private, and headboat). The most recent annual estimate of red snapper landings for all recreational sectors was used to project landings, and where necessary, landings were adjusted for changes in regulations (e.g., lower bag limit, shorter season length). Confidence limits were constructed for the 2008 landings projections. These confidence limits were used to assess probabilities of exceeding the recreational quota in 2008.

The projection results indicate that, under the existing Federal recreational fishing season, charter, private, and headboat sectors across the Gulf will land 1,774,952 lb (805,105 kg) of red snapper from Federal waters in 2008. This harvest level would represent more than 72 percent of the total recreational quota.

Under the existing state regulations, NMFS projects the recreational sectors of all five Gulf states combined will harvest a quantity of red snapper representing nearly 41 percent of the total recreational quota from state waters. The projections indicate Florida charter, private, and headboat sectors will land 815,787 lb (370,035 kg) of red snapper in state waters in 2008, representing approximately 33 percent of the total recreational quota. Texas, Louisiana, Mississippi, and Alabama recreational sectors are projected to land approximately 190,673 lb (86,489 kg) from state waters in 2008; nearly 8 percent of the total recreational quota.

In summary, there is a 50–percent probability that, under the existing Federal and state recreational regulations, recreational red snapper landings for 2008 will be approximately 2.78 million lb (1.26 million kg); a 13.5–percent overage in the 2008 recreational quota. The projections do not account for shifts in fishing effort or non-compliance that may occur as a result of incompatible state and Federal regulations. Therefore, the projections are likely to represent an underestimate of the quantity of red snapper expected to be landed by the recreational fishery during 2008. NMFS must ensure the recreational quota (representing state and Federal landings) is not exceeded during the fishing year.

On March 12, 2007, the United States District Court for the Southern District of Texas, Houston Division, issued a ruling on legal challenges to the red snapper rebuilding plan established in 2005 (*Coastal Conservation Association* v. *Gutierrez et al.*, Case No. H–05–1214, consolidated with *Gulf Restoration Network et al.*, v. *Gutierrez et al.*, Case No. H–05–2998). The ruling required NMFS and the Council to revise the red snapper rebuilding plan with a goal of having a 50–percent probability, or greater, of ending overfishing for red snapper between 2009 and 2010 and rebuilding the stock by 2032. The revised rebuilding plan, implemented in response to the Court ruling, reduced the recreational quota to 2.45 million pound (1.11 million kg). The rebuilding plan has slightly greater than a 50–percent probability of ending overfishing, assuming directed fishery landings strictly adhere to the total allowable catch and necessary reductions in bycatch mortality are achieved in the shrimp trawl fishery.

Given the recreational quota was exceeded in 2007, and NMFS' projections for the 2008 recreational fishing season indicate the quota again will be exceeded, there is an even greater likelihood of not attaining required reductions in fishing mortality to comply with the legal requirements and end overfishing of red snapper by 2010.

Given the five Gulf states' recreational red snapper regulations for 2008, NMFS estimates there is a 50–percent probability the recreational 2.45 million lb (1.11 million kg) quota will not be exceeded during the 2008 fishing year if Federal waters are closed to recreational fishing on August 24, 2008; 38 days before the end of the established June 1 through September 30 fishing season.

As previously discussed, the 2007 projections, which were based on a 50–percent probability of constraining recreational harvest to levels consistent with the quota, resulted in an overage of approximately 1 million lb (453,592 kg). The incompatible regulations in Texas and Florida contributed to this overage. Given that both Texas and Florida have decided to maintain incompatible regulations, NMFS is increasingly concerned that non-compliance and shifting effort from Federal to state waters due to the incompatible regulations will result in additional substantial overages, and a concomitant failure to maintain the established rebuilding targets. As a result, NMFS has taken a more precautionary approach to better ensure the fishing mortality reduction in 2008 is attained, and overfishing is ended by 2010. Based on the five Gulf states' 2008 recreational red snapper fishing seasons, NMFS estimates there is a 75–percent probability the 2.45 million lb (1.11 million kg) recreational quota will not be exceeded during the 2008 fishing year if the Federal fishery is closed on August 5, 2008; 57 days before the end of the established June 1 through September 30 recreational fishing season.

Requirement for Closure

50 CFR 622.42(a)(2) specifies a recreational quota of 2.45 million lb (1.11 million kg) for Gulf red snapper for the current fishing year, January 1 through December 31, 2008. Under 50 CFR 622.43(a), NMFS is required to close the recreational fishery in the EEZ at such time as projected to be necessary to prevent the recreational fishery from exceeding its quota for the fishing year, by filing a notification to that effect in the **Federal Register**. Accordingly, to better ensure recreational landings do not exceed the 2008 recreational quota, the recreational fishery for red snapper in the Gulf of Mexico EEZ is closed effective 12:01 a.m., local time, August 5, 2008, through December 31, 2008, the end of the fishing year. The recreational red snapper fishery will reopen June 1, 2009, the start of the 2009 fishing season.

During the closure, the bag and possession limits for red snapper in or from the Gulf EEZ is zero.

Classification

This action responds to the best available information recently obtained from the fishery. The Assistant Administrator for Fisheries, NOAA, finds that the need to immediately

implement this action to close the fishery constitutes good cause to waive the requirements to provide prior notice and opportunity for public comment pursuant to the authority set forth in 5 U.S.C. 553(b)(3)(B), as such procedures would be unnecessary and contrary to the public interest. Such procedures would be unnecessary because the rule implementing the quota already has been subject to notice and comment, and all that remains is to notify the public of the closure. NMFS has a legal obligation to keep harvest within the quota limits established by the stock rebuilding plan. There is a need to implement these measures in a timely fashion to prevent an overrun of the recreational quota of Gulf red snapper, given the capacity of the fishing fleet to harvest the quota quickly. Any delay in implementing this action would be impractical and contrary to the Magnuson-Steven Act, the FMP, and the public interest. To meet the legal obligation to constrain total recreational harvest to the quota, NMFS must close the recreational fishery in the EEZ earlier, i.e., by August 5, 2008, to compensate for continued fishing that will occur in those state waters where no compatible regulations exist. Those affected by this earlier closure, particularly charter vessel and headboat operations, need as much time as possible to adjust business plans to account for the earlier closure. Delaying the closure rule to accommodate prior public notice and comment would decrease the time available to adjust business plans.

This action is taken under 50 CFR 622.43(a) and is exempt from review under Executive Order 12866.

Authority: 16 U.S.C. 1801 *et seq.*

Dated: March 19, 2008.

Alan D. Risenhoover,

Director, Office of Sustainable Fisheries, National Marine Fisheries Service.

[FR Doc. E8–5939 Filed 3–24–08; 8:45 am]

BILLING CODE 3510–22–S

DEPARTMENT OF COMMERCE

National Oceanic and Atmospheric Administration

50 CFR Part 622

[Docket No. 001005281–0369–02]

RIN 0648–XG54

Fisheries of the Caribbean, Gulf of Mexico, and South Atlantic; Coastal Migratory Pelagic Resources of the Gulf of Mexico and South Atlantic; Trip Limit Reduction

AGENCY: National Marine Fisheries Service (NMFS), National Oceanic and Atmospheric Administration (NOAA), Commerce.

ACTION: Temporary rule; trip limit reduction.

SUMMARY: NMFS reduces the trip limit in the commercial hook-and-line fishery for king mackerel in the southern Florida west coast subzone to 500 lb (227 kg) of king mackerel per day in or from the exclusive economic zone (EEZ). This trip limit reduction is necessary to protect the Gulf king mackerel resource.

DATES: This rule is effective 12:01 a.m., local time, March 22, 2008, through June 30, 2008, unless changed by further notification in the **Federal Register**.

FOR FURTHER INFORMATION CONTACT: Steve Branstetter, telephone 727–824–5305, fax 727–824–5308, e-mail *steve.branstetter@noaa.gov*.

SUPPLEMENTARY INFORMATION: The fishery for coastal migratory pelagic fish (king mackerel, Spanish mackerel, cero, cobia, little tunny, and, in the Gulf of Mexico only, dolphin and bluefish) is managed under the Fishery Management Plan for the Coastal Migratory Pelagic Resources of the Gulf of Mexico and South Atlantic (FMP). The FMP was prepared by the Gulf of Mexico and South Atlantic Fishery Management Councils (Councils) and is implemented under the authority of the Magnuson-Stevens Fishery Conservation and Management Act (Magnuson-Stevens Act) by regulations at 50 CFR part 622.

On April 27, 2000, NMFS implemented the final rule (65 FR 16336, March 28, 2000) that divided the Florida west coast subzone of the eastern zone into northern and southern subzones, and established their separate quotas. The quota for the hook-and-line fishery in the southern Florida west coast subzone is 520,312 lb (236,010 kg)(50 CFR 622.42(c)(1)(i)(A)(*2*)(*i*)).

In accordance with 50 CFR 622.44(a)(2)(ii)(B)(*2*), from the date that 75 percent of the southern Florida west coast subzone's hook-and-line gear quota has been harvested until a closure of the subzone's hook-and-line fishery has been effected or the fishing year ends, king mackerel in or from the EEZ may be possessed on board or landed from a permitted vessel in amounts not exceeding 500 lb (227 kg) per day.

NMFS has determined that 75 percent of the hook-and-line gear quota for Gulf group king mackerel from the southern Florida west coast subzone has been reached. Accordingly, a 500-lb (227-kg) trip limit applies to vessels in the commercial hook-and-line fishery for king mackerel in or from the EEZ in the southern Florida west coast subzone effective 12:01 a.m., local time, March 22, 2008. The 500-lb (227-kg) trip limit will remain in effect until the fishery closes or until the end of the current fishing year (June 30, 2008), whichever occurs first.

The Florida west coast subzone is that part of the eastern zone located south and west of 25°20.4′ N. lat. (a line directly east from the Miami-Dade County, FL boundary) along the west coast of Florida to 87°31′06′ W. long. (a line directly south from the Alabama/Florida boundary). The Florida west coast subzone is further divided into northern and southern subzones. From November 1 through March 31, the southern subzone is designated as the area extending south and west from 25°20.4′ N. lat. to 26°19.8′ N. lat. (a line directly west from the Lee/Collier County, Florida, boundary), i.e., the area off Collier and Monroe Counties. Beginning April 1, the southern subzone is reduced to the area off Collier County, Florida, between 25°48′ N. lat. and 26°19.8′ N. lat.

Classification

This action responds to the best available information recently obtained from the fishery. The Assistant Administrator for Fisheries, NOAA, (AA), finds good cause to waive the requirement to provide prior notice and opportunity for public comment pursuant to the authority set forth at 5 U.S.C. 553(b)(B) as such prior notice and opportunity for public comment is unnecessary and contrary to the public interest. Such procedures would be unnecessary because the rule itself has already been subject to notice and comment, and all that remains is to notify the public of the trip limit reduction. Allowing prior notice and opportunity for public comment is contrary to the public interest because of the need to immediately implement this action in order to protect the fishery because the capacity of the fishing fleet

allows for rapid harvest of the quota. Prior notice and opportunity for public comment will require time and would potentially result in a harvest well in excess of the established quota.

For the aforementioned reasons, the AA also finds good cause to waive the 30-day delay in the effectiveness of this action under 5 U.S.C. 553(d)(3).

This action is taken under 50 CFR 622.43(a) and is exempt from review under Executive Order 12866.

Authority: 16 U.S.C. 1801 *et seq.*

Dated: March 19, 2008.

Emily H. Menashes,

Acting Director, Office of Sustainable Fisheries, National Marine Fisheries Service.

[FR Doc. 08–1068 Filed 3–19–08; 3:16 pm]

BILLING CODE 3510–22–S

DEPARTMENT OF COMMERCE

National Oceanic and Atmospheric Administration

50 CFR Part 679

[Docket No. 071106673–8011–02]

RIN 0648–XG58

Fisheries of the Exclusive Economic Zone Off Alaska; Pacific Cod by Catcher Vessels Less Than 60 ft (18.3 m) LOA Using Pot or Hook-and-Line Gear in the Bering Sea and Aleutian Islands Management Area

AGENCY: National Marine Fisheries Service (NMFS), National Oceanic and Atmospheric Administration (NOAA), Commerce.

ACTION: Temporary rule; closure.

SUMMARY: NMFS is prohibiting directed fishing for Pacific cod by catcher vessels less than 60 ft (< 18.3 meters (m)) length overall (LOA) using pot or hook-and-line gear in the Bering Sea and Aleutian Islands management area (BSAI). This action is necessary to prevent exceeding the 2008 Pacific cod total allowable catch (TAC) allocated to catcher vessels < 60 ft (18.3 m) LOA using pot or hook-and-line gear in the BSAI.

DATES: Effective 1200 hrs, Alaska local time (A.l.t.), March 21, 2008, through 2400 hrs, A.l.t., December 31, 2008.

FOR FURTHER INFORMATION CONTACT: Jennifer Hogan, 908–586–7228.

SUPPLEMENTARY INFORMATION: NMFS manages the groundfish fishery in the BSAI according to the Fishery Management Plan for Groundfish of the Bering Sea and Aleutian Islands Management Area (FMP) prepared by the North Pacific Fishery Management Council under authority of the Magnuson-Stevens Fishery Conservation and Management Act. Regulations governing fishing by U.S. vessels in accordance with the FMP appear at subpart H of 50 CFR part 600 and 50 CFR part 679.

The 2008 and 2009 final harvest specification for groundfish in the BSAI (73 FR 10160, February 26, 2008) and reallocation (73 FR 11562, March 4, 2008) allocated a directed fishing allowance for Pacific cod of 4,233 metric tons to catcher vessels < 60 ft (18.3 m) LOA using pot or hook-and-line gear in the BSAI. See § 679.20(c)(3)(iii), § 679.20(c)(5), and § 679.20(a)(7)(ii).

In accordance with § 679.20(d)(1)(iii), the Regional Administrator finds that the 2008 Pacific cod directed fishing allowance allocated to catcher vessels less than 60 ft (18.3 m) LOA using pot or hook-and-line gear in the BSAI has been reached. Consequently, NMFS is prohibiting directed fishing for Pacific cod by catcher vessels < 60 ft (18.3 m) LOA using pot or hook-and-line gear in the BSAI.

After the effective date of this closure the maximum retainable amounts at § 679.20(e) and (f) apply at any time during a trip.

Classification

This action responds to the best available information recently obtained from the fishery. The Assistant Administrator for Fisheries, NOAA (AA), finds good cause to waive the requirement to provide prior notice and opportunity for public comment pursuant to the authority set forth at 5 U.S.C. 553(b)(B) as such requirement is impracticable and contrary to the public interest. This requirement is impracticable and contrary to the public interest as it would prevent NMFS from responding to the most recent fisheries data in a timely fashion and would delay the closure of Pacific cod by catcher vessels < 60 ft (18.3 m) LOA using pot or hook-and-line gear in the BSAI. NMFS was unable to publish a notice providing time for public comment because the most recent, relevant data only became available as of March 18, 2008.

The AA also finds good cause to waive the 30-day delay in the effective date of this action under 5 U.S.C. 553(d)(3). This finding is based upon the reasons provided above for waiver of prior notice and opportunity for public comment.

This action is required by § 679.20 and is exempt from review under Executive Order 12866.

Authority: 16 U.S.C. 1801 *et seq.*

Dated: March 19, 2008.

Emily H. Menashes

Acting Director, Office of Sustainable Fisheries, National Marine Fisheries Service.

[FR Doc. 08–1067 Filed 3–19–08; 3:16 pm]

BILLING CODE 3510–22–S

Proposed Rules

Federal Register
Vol. 73, No. 58
Tuesday, March 25, 2008

This section of the FEDERAL REGISTER contains notices to the public of the proposed issuance of rules and regulations. The purpose of these notices is to give interested persons an opportunity to participate in the rule making prior to the adoption of the final rules.

DEPARTMENT OF TRANSPORTATION

Federal Aviation Administration

14 CFR Part 39

[Docket No. FAA–2008–0353; Directorate Identifier 2007–CE–101–AD]

RIN 2120–AA64

Airworthiness Directives; Hawker Beechcraft Corporation Model 390 Airplanes

AGENCY: Federal Aviation Administration (FAA), Department of Transportation (DOT).

ACTION: Notice of proposed rulemaking (NPRM).

SUMMARY: We propose to adopt a new airworthiness directive (AD) for certain Hawker Beechcraft Corporation Model 390 airplanes. This proposed AD would require you to repetitively do a post-flight check (owner/operator holding at least a private pilot certificate checking for residual heat in the angle-of-attack (AOA) probes or an appropriately-rated mechanic doing a maintenance manual operational test of the heat of the AOA probes) after every flight and replace or modify (upload software) the stall warning AOA transmitters. This proposed AD results from reports of the potential for unannunciated loss of the heating function in the left-hand (LH) and right-hand (RH) stall warning AOA transmitters of Model 390 airplanes. We are proposing this AD to correct potentially inadequate stall warning with loss of stick pusher function.

DATES: We must receive comments on this proposed AD by May 27, 2008.

ADDRESSES: Use one of the following addresses to comment on this proposed AD:

- *Federal eRulemaking Portal:* Go to *http://www.regulations.gov*. Follow the instructions for submitting comments.
- *Fax:* (202) 493–2251.
- *Mail:* U.S. Department of Transportation, Docket Operations, M–30, West Building Ground Floor, Room W12–140, 1200 New Jersey Avenue, SE., Washington, DC 20590.
- *Hand Delivery:* U.S. Department of Transportation, Docket Operations, M–30, West Building Ground Floor, Room W12–140, 1200 New Jersey Avenue, SE., Washington, DC 20590, between 9 a.m. and 5 p.m., Monday through Friday, except Federal holidays.

For service information identified in this proposed AD, contact Hawker Beechcraft Corporation, 9709 East Central, Wichita, Kansas 67291; telephone: (800) 429–5372 or (316) 676–3140.

FOR FURTHER INFORMATION CONTACT: Philip Petty, Aerospace Engineer, Wichita Aircraft Certification Office, 1801 Airport Road, Room 100, Wichita, Kansas 67209; telephone: (316) 946–4139; fax: (316) 946–4107.

SUPPLEMENTARY INFORMATION:

Comments Invited

We invite you to send any written relevant data, views, or arguments regarding this proposed AD. Send your comments to an address listed under the **ADDRESSES** section. Include the docket number, ''FAA–2008–0353; Directorate Identifier 2007–CE–101–AD'' at the beginning of your comments. We specifically invite comments on the overall regulatory, economic, environmental, and energy aspects of the proposed AD. We will consider all comments received by the closing date and may amend the proposed AD in light of those comments.

We will post all comments we receive, without change, to *http://www.regulations.gov*, including any personal information you provide. We will also post a report summarizing each substantive verbal contact we receive concerning this proposed AD.

Discussion

We have received reports of the potential for unannunciated loss of the heating function in the LH/RH stall warning AOA transmitters of Model 390 airplanes. The current AOA transmitter software may not always annunciate certain failure modes of the probe or case heating circuits.

This condition, if not corrected, could result in potentially inadequate stall warning with loss of stick pusher function.

Relevant Service Information

We have reviewed Hawker Beechcraft Mandatory Service Bulletin No. SB 27–3787, issued: May 2007; and Raytheon Aircraft Company Temporary Change to the FAA Approved Airplane Flight Manual P/N 390–590001–0003CTC7, issued: March 15, 2007. The service information describes procedures for the replacement/modification of the stall warning AOA transmitters. The airplane flight manual (AFM) describes procedures for doing a post-flight check. This post-flight check can be either the pilot checking for residual heat in the AOA probes as part of the shutdown procedure or, alternatively, having the AOA probe heat operational test maintenance manual procedure done by an appropriately-rated mechanic.

FAA's Determination and Requirements of the Proposed AD

We are proposing this AD because we evaluated all information and determined the unsafe condition described previously is likely to exist or develop on other products of the same type design. This proposed AD would require a repetitive post-flight check for residual heat in the AOA probes or a maintenance manual operational test of the heat of the AOA probes after every flight and replace or modify (upload software) the stall warning AOA transmitters. Replacement or modification (upload software) of the stall warning AOA transmitters terminates the repetitive requirement to do the post-flight action.

Costs of Compliance

We estimate that this proposed AD would affect 152 airplanes in the U.S. registry.

We estimate the following costs to incorporate and remove the temporary change to the AFM.

Labor cost	Parts cost	Total cost per airplane
0.5 work-hour × $80 per hour = $40	Not Applicable	$40

We estimate that the proposed post-flight residual heat check requires about 3 minutes to do. We estimate the following costs to do 10 of the proposed post-flight residual heat checks. We have no way of determining the number of airplanes that would have this post-flight residual heat check, or how many times this will need to be performed before the terminating action is done:

Labor cost to do 10 post-flight residual heat checks	Parts cost	Total cost per airplane
0.5 work-hour × $80 per hour = $40	Not Applicable	$40

We estimate the following costs to do the proposed maintenance manual operational test of the heat of the AOA probes. We have no way of determining the number of airplanes that would have this operational test, or how many times this will need to be performed before the terminating action is done:

Labor cost	Parts cost	Total cost per airplane
0.5 work-hour × $80 per hour = $40	Not Applicable	$40

We estimate the following costs to do any proposed upload of software to the AOA transmitters. We have no way of determining the number of airplanes that would have this modification:

Labor cost	Parts cost	Total cost per airplane
4 work-hours × $80 per hour = $320	Not Applicable	$320

We estimate the following costs to do any proposed replacement of 2 stall warning AOA transmitters. We have no way of determining the number of airplanes that would have this replacement:

Labor cost	Parts cost	Total cost per airplane
2 work-hours × $80 per hour = $160	$18,600	$18,760

Authority for This Rulemaking

Title 49 of the United States Code specifies the FAA's authority to issue rules on aviation safety. Subtitle I, Section 106, describes the authority of the FAA Administrator. Subtitle VII, Aviation Programs, describes in more detail the scope of the Agency's authority.

We are issuing this rulemaking under the authority described in Subtitle VII, Part A, Subpart III, Section 44701, ''General requirements.'' Under that section, Congress charges the FAA with promoting safe flight of civil aircraft in air commerce by prescribing regulations for practices, methods, and procedures the Administrator finds necessary for safety in air commerce. This regulation is within the scope of that authority because it addresses an unsafe condition that is likely to exist or develop on products identified in this rulemaking action.

Regulatory Findings

We have determined that this proposed AD would not have federalism implications under Executive Order 13132. This proposed AD would not have a substantial direct effect on the States, on the relationship between the national Government and the States, or on the distribution of power and responsibilities among the various levels of government.

For the reasons discussed above, I certify that the proposed regulation:

1. Is not a ''significant regulatory action'' under Executive Order 12866;

2. Is not a ''significant rule'' under the DOT Regulatory Policies and Procedures (44 FR 11034, February 26, 1979); and

3. Will not have a significant economic impact, positive or negative, on a substantial number of small entities under the criteria of the Regulatory Flexibility Act.

We prepared a regulatory evaluation of the estimated costs to comply with this proposed AD and placed it in the AD docket.

Examining the AD Docket

You may examine the AD docket that contains the proposed AD, the regulatory evaluation, any comments received, and other information on the Internet at *http://www.regulations.gov;* or in person at the Docket Management Facility between 9 a.m. and 5 p.m., Monday through Friday, except Federal holidays. The Docket Office (telephone (800) 647–5527) is located at the street address stated in the **ADDRESSES** section. Comments will be available in the AD docket shortly after receipt.

List of Subjects in 14 CFR Part 39

Air transportation, Aircraft, Aviation safety, Safety.

The Proposed Amendment

Accordingly, under the authority delegated to me by the Administrator, the FAA proposes to amend 14 CFR part 39 as follows:

PART 39—AIRWORTHINESS DIRECTIVES

1. The authority citation for part 39 continues to read as follows:

Authority: 49 U.S.C. 106(g), 40113, 44701.

§ 39.13 [Amended]

2. The FAA amends § 39.13 by adding the following new AD:

Hawker Beechcraft Corporation: Docket No. FAA–2008–0353; Directorate Identifier 2007–CE–101–AD.

Comments Due Date

(a) We must receive comments on this airworthiness directive (AD) action by May 27, 2008.

Affected ADs

(b) None.

Applicability

(c) This AD applies to Model 390 airplanes, serial numbers RB–4 through RB–204, that are certificated in any category.

Unsafe Condition

(d) This AD results from reports of the potential for unannunciated loss of the heating function in the left-hand (LH) and right-hand (RH) stall warning angle-of-attack (AOA) transmitters of Model 390 airplanes. We are issuing this AD to correct potentially inadequate stall warning with loss of stick pusher function.

Compliance

(e) To address this problem, you must do the following, unless already done:

Actions	Compliance	Procedures
(1) Incorporate Raytheon Aircraft Company Temporary Change to the FAA Approved Airplane Flight Manual P/N 390–590001–0003CTC7, issued: March 15, 2007, into the airplane flight manual (AFM).	Within 15 hours time-in-service (TIS) after the effective date of the AD or within 30 days after the effective date of the AD, whichever occurs first.	Not Applicable.
(2) After every flight do the following: (i) Do a post-flight check for residual heat in the AOA probes. CAUTION: TO PREVENT POSSIBLE BURNS, USE EXTREME CAUTION TOUCHING HEATED AREAS. TO CHECK HEATING AND AVOID BURNS, HOLD HAND NEAR HEATED AREA OR MOVE HAND GRADUALLY FROM AMBIENT AREA TOWARD HEATED AREA UNTIL WARMTH CAN BE FELT. If you do not feel heat in the AOA probes, then do paragraph (e)(2)(ii) of this AD; or (ii) Do a post-flight maintenance manual operational test of the heat of the AOA probes. If the AOA probe fails the operational test, replace the AOA probe.	Within 15 hours TIS after the effective date of the AD or within 30 days after the effective date of the AD, whichever occurs first. Completion of paragraph (e)(3)(i) or (e)(3)(ii) of this AD terminates the required repetitive post-flight check of this AD.	(A) *For the post-flight check for residual heat in the AOA probes:* Follow AFM Temporary Change P/N 390–590001–0003CTC7, issued: March 15, 2007. The owner/operator holding at least a private pilot certificate as authorized by section 43.7 of the Federal Aviation Regulations (14 CFR 43.7) may do this post-flight check required by paragraph (e)(2)(i) of this AD. Make an entry into the aircraft records showing compliance with this AD following section 43.9 of the Federal Aviation Regulations (14 CFR 43.9). (B) *For the post-flight maintenance manual operational test of the heat of the AOA probes:* Follow the procedures of the maintenance manual to do the operational test of the heat of the AOA probes required by paragraph (e)(2)(ii) of this AD. The maintenance manual operational test must be done by an appropriately-rated mechanic. (C) *For AOA probe replacement:* Follow Hawker Beechcraft Mandatory Service Bulletin No. SB 27–3787, issued: May 2007.
(3) Replace or modify (upload software) the stall warning AOA transmitters by doing one of the following: (i) Upload new software Kit No. 123–3436 (Field Software Upload SLZ8060–3,–4) to the AOA transmitters; or (ii) Replace any part number (P/N) SLZ8060–3 and/or P/N SLZ8060–4 AOA transmitters with new P/N SLZ8060–5 AOA transmitters.	Within 250 hours TIS after the effective date of this AD or within 12 months after the effective date of this AD, whichever occurs first. Completion of either paragraph (e)(3)(i) or (e)(3)(ii) of this AD terminates the required repetitive post-flight check of this AD.	Follow Hawker Beechcraft Mandatory Service Bulletin No. SB 27–3787, issued: May 2007.
(4) Remove Raytheon Aircraft Company Temporary Change to the FAA Approved Airplane Flight Manual P/N 390–590001–0003CTC7, issued: March 15, 2007, from the AFM.	Before further flight after doing the actions required by paragraph (e)(3)(i) or paragraph (e)(3)(ii) of this AD.	Follow Hawker Beechcraft Mandatory Service Bulletin No. SB 27–3787, issued: May 2007.
(5) Do not install any P/N SLZ8060–3 or P/N SLZ8060–4 AOA transmitter that does not have the new upgraded software required by paragraph (e)(3)(i) of this AD.	As of the effective date of this AD	Not Applicable.

Alternative Methods of Compliance (AMOCs)

(f) The Manager, Wichita Aircraft Certification Office (ACO), FAA, has the authority to approve AMOCs for this AD, if requested using the procedures found in 14 CFR 39.19. Send information to ATTN: Philip Petty, Aerospace Engineer, Wichita ACO, 1801 Airport Road, Room 100, Wichita, Kansas 67209; telephone: (316) 946–4139; fax: (316) 946–4107. Before using any approved AMOC on any airplane to which the AMOC applies, notify your appropriate principal inspector (PI) in the FAA Flight Standards District Office (FSDO), or lacking a PI, your local FSDO.

Related Information

(g) To get copies of the service information referenced in this AD, contact Hawker Beechcraft Corporation, 9709 East Central, Wichita, Kansas 67291; telephone: (800) 429–5372 or (316) 676–3140. To view the AD docket, go to U.S. Department of Transportation, Docket Operations, M–30, West Building Ground Floor, Room W12–140, 1200 New Jersey Avenue, SE., Washington, DC 20590, or on the Internet at *http://www.regulations.gov*.

Issued in Kansas City, Missouri, on March 19, 2008.

John Colomy,

Acting Manager, Small Airplane Directorate, Aircraft Certification Service.

[FR Doc. E8–5959 Filed 3–24–08; 8:45 am]

BILLING CODE 4910–13–P

DEPARTMENT OF TRANSPORTATION

Federal Aviation Administration

14 CFR Part 39

[Docket No. FAA–2008–0342; Directorate Identifier 2007–NM–305–AD]

RIN 2120–AA64

Airworthiness Directives; Airbus Model A318, A319, A320, and A321 Series Airplanes

AGENCY: Federal Aviation Administration (FAA), DOT.

ACTION: Notice of proposed rulemaking (NPRM).

SUMMARY: We propose to adopt a new airworthiness directive (AD) for the products listed above. This proposed AD results from mandatory continuing airworthiness information (MCAI) originated by an aviation authority of another country to identify and correct an unsafe condition on an aviation product. The MCAI describes the unsafe condition as:

During planned maintenance visit on one A320 aircraft, a cross connection of the fire extinguishing circuit system was identified. In case of fire, this cross connection will activate (discharge) the wrong forward or aft cargo compartment fire extinguisher bottle.

Failure to activate the correct bottle when required is classified as potentially catastrophic.

* * * * *

The proposed AD would require actions that are intended to address the unsafe condition described in the MCAI.

DATES: We must receive comments on this proposed AD by April 24, 2008.

ADDRESSES: You may send comments by any of the following methods:

- *Federal eRulemaking Portal:* Go to *http://www.regulations.gov*. Follow the instructions for submitting comments.
- *Fax:* (202) 493–2251.
- *Mail:* U.S. Department of Transportation, Docket Operations, M–30, West Building Ground Floor, Room W12–140, 1200 New Jersey Avenue, SE., Washington, DC 20590.
- *Hand Delivery:* U.S. Department of Transportation, Docket Operations, M–30, West Building Ground Floor, Room W12–40, 1200 New Jersey Avenue, SE., Washington, DC, between 9 a.m. and 5 p.m., Monday through Friday, except Federal holidays.

Examining the AD Docket

You may examine the AD docket on the Internet at *http://www.regulations.gov*; or in person at the Docket Operations office between 9 a.m. and 5 p.m., Monday through Friday, except Federal holidays. The AD docket contains this proposed AD, the regulatory evaluation, any comments received, and other information. The street address for the Docket Operations office (telephone (800) 647–5527) is in the **ADDRESSES** section. Comments will be available in the AD docket shortly after receipt.

FOR FURTHER INFORMATION CONTACT: Tim Dulin, Aerospace Engineer, International Branch, ANM–116, Transport Airplane Directorate, FAA, 1601 Lind Avenue, SW., Renton, Washington 98057–3356; telephone (425) 227–2141; fax (425) 227–1149.

SUPPLEMENTARY INFORMATION:

Comments Invited

We invite you to send any written relevant data, views, or arguments about this proposed AD. Send your comments to an address listed under the **ADDRESSES** section. Include ''Docket No. FAA–2008–0342; Directorate Identifier 2007–NM–305–AD'' at the beginning of your comments. We specifically invite comments on the overall regulatory, economic, environmental, and energy aspects of this proposed AD. We will consider all comments received by the closing date and may amend this proposed AD based on those comments.

We will post all comments we receive, without change, to *http://www.regulations.gov*, including any personal information you provide. We will also post a report summarizing each substantive verbal contact we receive about this proposed AD.

Discussion

The European Aviation Safety Agency (EASA), which is the Technical Agent for the Member States of the European Community, has issued EASA Airworthiness Directive 2008–0249, dated September 24, 2007 (referred to after this as ''the MCAI''), to correct an unsafe condition for the specified products. The MCAI states:

During planned maintenance visit on one A320 aircraft, a cross connection of the fire extinguishing circuit system was identified. In case of fire, this cross connection will activate (discharge) the wrong forward or aft cargo compartment fire extinguisher bottle.

Failure to activate the correct bottle when required is classified as potentially catastrophic.

For the reasons described above, this AD requires a one-time inspection and check of the cargo firing circuit continuity to confirm the correct connection of the dedicated wires between the discharge pushbutton switches and the relevant cargo bottle.

Corrective action includes modifying the wiring connection on plug 1505VC–A. You may obtain further information by examining the MCAI in the AD docket.

Relevant Service Information

Airbus has issued Service Bulletin A320–26A1068, Revision 01, dated July 19, 2007. The actions described in this service information are intended to correct the unsafe condition identified in the MCAI.

FAA's Determination and Requirements of This Proposed AD

This product has been approved by the aviation authority of another country, and is approved for operation in the United States. Pursuant to our bilateral agreement with the State of Design Authority, we have been notified of the unsafe condition described in the MCAI and service information referenced above. We are proposing this AD because we evaluated all pertinent information and determined an unsafe condition exists and is likely to exist or develop on other products of the same type design.

Differences Between This AD and the MCAI or Service Information

We have reviewed the MCAI and related service information and, in general, agree with their substance. But we might have found it necessary to use different words from those in the MCAI to ensure the AD is clear for U.S. operators and is enforceable. In making these changes, we do not intend to differ substantively from the information provided in the MCAI and related service information.

We might also have proposed different actions in this AD from those in the MCAI in order to follow FAA policies. Any such differences are highlighted in a NOTE within the proposed AD.

Costs of Compliance

Based on the service information, we estimate that this proposed AD would affect about 679 products of U.S. registry. We also estimate that it would take about 6 work-hours per product to comply with the basic requirements of this proposed AD. The average labor rate is $80 per work-hour. Based on these figures, we estimate the cost of the proposed AD on U.S. operators to be $325,920, or $480 per product.

Authority for This Rulemaking

Title 49 of the United States Code specifies the FAA's authority to issue rules on aviation safety. Subtitle I, section 106, describes the authority of the FAA Administrator. ''Subtitle VII: Aviation Programs'' describes in more detail the scope of the Agency's authority.

We are issuing this rulemaking under the authority described in ''Subtitle VII, Part A, Subpart III, Section 44701: General requirements.'' Under that section, Congress charges the FAA with promoting safe flight of civil aircraft in air commerce by prescribing regulations for practices, methods, and procedures the Administrator finds necessary for safety in air commerce. This regulation is within the scope of that authority because it addresses an unsafe condition that is likely to exist or develop on products identified in this rulemaking action.

Regulatory Findings

We determined that this proposed AD would not have federalism implications under Executive Order 13132. This proposed AD would not have a substantial direct effect on the States, on the relationship between the national Government and the States, or on the distribution of power and responsibilities among the various levels of government.

For the reasons discussed above, I certify this proposed regulation:

1. Is not a ''significant regulatory action'' under Executive Order 12866;
2. Is not a ''significant rule'' under the DOT Regulatory Policies and Procedures (44 FR 11034, February 26, 1979); and
3. Will not have a significant economic impact, positive or negative, on a substantial number of small entities under the criteria of the Regulatory Flexibility Act.

We prepared a regulatory evaluation of the estimated costs to comply with this proposed AD and placed it in the AD docket.

List of Subjects in 14 CFR Part 39

Air transportation, Aircraft, Aviation safety, Safety.

The Proposed Amendment

Accordingly, under the authority delegated to me by the Administrator, the FAA proposes to amend 14 CFR part 39 as follows:

PART 39—AIRWORTHINESS DIRECTIVES

1. The authority citation for part 39 continues to read as follows:

Authority: 49 U.S.C. 106(g), 40113, 44701.

§ 39.13 [Amended]

2. The FAA amends § 39.13 by adding the following new AD:

Airbus: Docket No. FAA–2008–0342; Directorate Identifier 2007–NM–305–AD.

Comments Due Date

(a) We must receive comments by April 24, 2008.

Affected ADs

(b) None.

Applicability

(c) This AD applies to Airbus Model A318, A319, A320, and A321 series airplanes, certificated in any category, all certified models; all serial numbers which have received an original French standard airworthiness certificate or original French export certificate of airworthiness prior to February 28, 2007, and have been fitted with a cargo compartment fire extinguisher bottle installed in production, or in service by an Airbus Service Bulletin; except airplanes on which Airbus (MRBR) Maintenance Review Board Report Task 26.23.00/03 or 26.23.00/07 has been performed.

Subject

(d) Air Transport Association (ATA) of America Code 26: Fire Protection.

Reason

(e) The mandatory continuing airworthiness information (MCAI) states:

> During planned maintenance visit on one A320 aircraft, a cross connection of the fire extinguishing circuit system was identified. In case of fire, this cross connection will activate (discharge) the wrong forward or aft cargo compartment fire extinguisher bottle.
>
> Failure to activate the correct bottle when required is classified as potentially catastrophic.
>
> For the reasons described above, this AD requires a one-time inspection and check of the cargo firing circuit continuity to confirm the correct connection of the dedicated wires between the discharge pushbutton switches and the relevant cargo bottle.
>
> Corrective action includes modifying the wiring connection on plug 1505VC–A.

Actions and Compliance

(f) Within 600 flight hours after the effective date of this AD, unless already done, perform the inspection and continuity check of the cargo firing circuit and, before next flight, do applicable corrective actions; in accordance with the Accomplishment Instructions of Airbus Service Bulletin A320–26A1068, Revision 01, dated July 19, 2007. Actions done before the effective date of this AD in accordance with Airbus Service Bulletin A320–26A1068, dated March 19, 2007, are considered acceptable for compliance with the requirements of this AD. Accomplishing Airbus MRBR Task 26.23.00/03 or 26.23.00/07 is an acceptable method of compliance with the requirements of this AD.

FAA AD Differences

Note: This AD differs from the MCAI and/or service information as follows: No differences.

Other FAA AD Provisions

(g) The following provisions also apply to this AD:

(1) *Alternative Methods of Compliance (AMOCs):* The Manager, International Branch, ANM–116, Transport Airplane Directorate, FAA, has the authority to approve AMOCs for this AD, if requested using the procedures found in 14 CFR 39.19. Send information to ATTN: Tim Dulin, Aerospace Engineer, International Branch, ANM–116, Transport Airplane Directorate, FAA, 1601 Lind Avenue, SW., Renton, Washington 98057–3356; telephone (425) 227–2141; fax (425) 227–1149. Before using any approved AMOC on any airplane to which the AMOC applies, notify your appropriate principal inspector (PI) in the FAA Flight Standards District Office (FSDO), or lacking a PI, your local FSDO.

(2) *Airworthy Product:* For any requirement in this AD to obtain corrective actions from a manufacturer or other source, use these actions if they are FAA-approved. Corrective actions are considered FAA-approved if they are approved by the State of Design Authority (or their delegated agent). You are required to assure the product is airworthy before it is returned to service.

(3) *Reporting Requirements:* For any reporting requirement in this AD, under the provisions of the Paperwork Reduction Act, the Office of Management and Budget (OMB) has approved the information collection requirements and has assigned OMB Control Number 2120–0056.

Related Information

(h) Refer to MCAI European Aviation Safety Agency (EASA) Airworthiness Directive 2007–0249, dated September 24, 2007, and Airbus Service Bulletin A320–26A1068, Revision 01, dated July 19, 2007, for related information.

Issued in Renton, Washington, on March 14, 2008.

Ali Bahrami,

Manager, Transport Airplane Directorate, Aircraft Certification Service.

[FR Doc. E8–6051 Filed 3–24–08; 8:45 am]

BILLING CODE 4910–13–P

DEPARTMENT OF TRANSPORTATION

Federal Aviation Administration

14 CFR Part 39

[Docket No. FAA–2008–0356; Directorate Identifier 2008–NM–042–AD]

RIN 2120–AA64

Airworthiness Directives; Bombardier Model DHC–8–400 Series Airplanes

AGENCY: Federal Aviation Administration (FAA), Department of Transportation (DOT).

ACTION: Notice of proposed rulemaking (NPRM).

SUMMARY: The FAA proposes to supersede an existing airworthiness directive (AD) that applies to certain Bombardier Model DHC–8–400 series airplanes. The existing AD currently requires inspecting all barrel nuts to determine if the barrel nuts have a certain marking, inspecting affected bolts to determine if the bolts are pre-loaded correctly, and replacing all hardware if the pre-load is incorrect. For airplanes on which the pre-load is correct, the existing AD requires doing repetitive visual inspections for cracking of the barrel nuts and cradles and replacing all hardware for all cracked barrel nuts. The existing AD also requires replacement of all hardware for certain affected barrel nuts that do not have cracking, which would end the repetitive inspections for those airplanes. The existing AD also provides an optional replacement for all affected barrel nuts. This proposed AD would require replacement of all affected barrel nuts. This proposed AD results from reports of cracking in the barrel nuts at the four primary front spar wing-to-fuselage attachment joints. We are proposing this AD to detect and correct cracking of the barrel nuts at the wing front spar wing-to-fuselage joints, which could result in reduced structural integrity of the wing-to-fuselage attachments and consequent detachment of the wing.

DATES: We must receive comments on this proposed AD by April 24, 2008.

ADDRESSES: You may send comments by any of the following methods:

- *Federal eRulemaking Portal:* Go to *http://www.regulations.gov*. Follow the instructions for submitting comments.
- *Fax:* 202–493–2251.
- *Mail:* U.S. Department of Transportation, Docket Operations, M–30, West Building Ground Floor, Room W12–140, 1200 New Jersey Avenue, SE., Washington, DC 20590.
- *Hand Delivery:* U.S. Department of Transportation, Docket Operations, M–30, West Building Ground Floor, Room W12–140, 1200 New Jersey Avenue, SE., Washington, DC 20590, between 9 a.m. and 5 p.m., Monday through Friday, except Federal holidays.

For service information identified in this AD, contact Bombardier, Inc., Bombardier Regional Aircraft Division, 123 Garratt Boulevard, Downsview, Ontario M3K 1Y5, Canada.

Examining the AD Docket

You may examine the AD docket on the Internet at *http://www.regulations.gov*; or in person at the Docket Management Facility between 9 a.m. and 5 p.m., Monday through Friday, except Federal holidays. The AD docket contains this proposed AD, the regulatory evaluation, any comments received, and other information. The street address for the Docket Office (telephone 800–647–5527) is in the **ADDRESSES** section. Comments will be available in the AD docket shortly after receipt.

FOR FURTHER INFORMATION CONTACT: Pong Lee, Aerospace Engineer, Airframe and Propulsion Branch, ANE–171, FAA, New York Aircraft Certification Office, 1600 Stewart Avenue, Suite 410, Westbury, New York 11590; telephone (516) 228–7324; fax (516) 794–5531.

SUPPLEMENTARY INFORMATION:

Comments Invited

We invite you to send any written relevant data, views, or arguments about this proposed AD. Send your comments to an address listed under the **ADDRESSES** section. Include ''Docket No. FAA–2008–0356; Directorate Identifier 2008–NM–042–AD'' at the beginning of your comments. We specifically invite comments on the overall regulatory, economic, environmental, and energy aspects of this proposed AD. We will consider all comments received by the closing date and may amend this proposed AD because of those comments.

We will post all comments we receive, without change, to *http://www.regulations.gov*, including any personal information you provide. We will also post a report summarizing each substantive verbal contact we receive about this proposed AD.

Discussion

On February 7, 2008, we issued AD 2008–04–02, amendment 39–15374 (73 FR 8187, February 13, 2008), for certain Bombardier Model DHC–8–400 series airplanes. That AD requires inspecting all barrel nuts to determine if the barrel nuts have a certain marking, inspecting affected bolts to determine if the bolts are pre-loaded correctly, and replacing all hardware if the pre-load is incorrect. For airplanes on which the pre-load is correct, that AD requires doing repetitive visual inspections for cracking of the barrel nuts and cradles and replacing all hardware for all cracked barrel nuts. That AD also requires replacement of all hardware for certain affected barrel nuts that do not have cracking, which would end the repetitive inspections for those airplanes. That AD also provides an optional replacement for all affected barrel nuts. That AD resulted from reports of cracking in the barrel nuts at the four primary front spar wing-to-fuselage attachment joints. We issued that AD to detect and correct cracking of the barrel nuts at the wing front spar wing-to-fuselage joints, which could result in reduced structural integrity of the wing-to-fuselage attachments and consequent detachment of the wing.

Actions Since Existing AD Was Issued

The preamble to AD 2008–04–02 explains that we consider the requirements ''interim action'' and were considering further rulemaking to require the replacement of all hardware for all barrel nuts identified with a marking of LH7940T SPS 01. We now have determined that further rulemaking is indeed necessary, and this proposed AD follows from that determination.

FAA's Determination and Requirements of the Proposed AD

These airplanes are manufactured in Canada and are type certificated for operation in the United States under the provisions of section 21.29 of the Federal Aviation Regulations (14 CFR 21.29) and the applicable bilateral airworthiness agreement. Pursuant to this bilateral airworthiness agreement, Transport Canada Civil Aviation (TCCA) has kept the FAA informed of the situation described above. We have examined the TCCA's findings, evaluated all pertinent information, and determined that AD action is necessary for airplanes of this type design that are certificated for operation in the United States.

This proposed AD would supersede AD 2008–04–02 and would retain the requirements of the existing AD. This proposed AD would also require replacement of all affected barrel nuts.

Costs of Compliance

This proposed AD would affect about 48 airplanes of U.S. registry.

The actions that are required by AD 2008–04–02 and retained in this proposed AD take about 3 work hours per airplane, at an average labor rate of $80 per work hour. Based on these figures, the estimated cost of the currently required actions is $11,520, or $240 per airplane, per inspection cycle.

Replacement of the hardware of a barrel nut, if required, will take about 12 work hours per airplane, at an average labor rate of $80 per work hour. Required parts will cost about $800 per airplane. Based on these figures, we estimate the cost of a replacement to be $1,760 per barrel nut.

Authority for This Rulemaking

Title 49 of the United States Code specifies the FAA's authority to issue rules on aviation safety. Subtitle I, Section 106, describes the authority of the FAA Administrator. Subtitle VII, Aviation Programs, describes in more detail the scope of the Agency's authority.

We are issuing this rulemaking under the authority described in Subtitle VII, Part A, Subpart III, Section 44701, ''General requirements.'' Under that section, Congress charges the FAA with promoting safe flight of civil aircraft in air commerce by prescribing regulations for practices, methods, and procedures the Administrator finds necessary for safety in air commerce. This regulation is within the scope of that authority because it addresses an unsafe condition that is likely to exist or develop on products identified in this rulemaking action.

Regulatory Findings

We have determined that this proposed AD would not have federalism implications under Executive Order 13132. This proposed AD would not have a substantial direct effect on the States, on the relationship between the national Government and the States, or on the distribution of power and responsibilities among the various levels of government.

For the reasons discussed above, I certify that the proposed regulation:

1. Is not a ''significant regulatory action'' under Executive Order 12866;

2. Is not a ''significant rule'' under the DOT Regulatory Policies and Procedures (44 FR 11034, February 26, 1979); and

3. Will not have a significant economic impact, positive or negative, on a substantial number of small entities under the criteria of the Regulatory Flexibility Act.

We prepared a regulatory evaluation of the estimated costs to comply with this proposed AD and placed it in the AD docket. See the **ADDRESSES** section for a location to examine the regulatory evaluation.

List of Subjects in 14 CFR Part 39

Air transportation, Aircraft, Aviation safety, Safety.

The Proposed Amendment

Accordingly, under the authority delegated to me by the Administrator, the FAA proposes to amend 14 CFR part 39 as follows:

PART 39—AIRWORTHINESS DIRECTIVES

1. The authority citation for part 39 continues to read as follows:

Authority: 49 U.S.C. 106(g), 40113, 44701.

§ 39.13 [Amended]

2. The Federal Aviation Administration (FAA) amends § 39.13 by removing amendment 39–15374 (73 FR 8187, February 13, 2008) and adding the following new airworthiness directive (AD):

Bombardier, Inc. (Formerly de Havilland, Inc.): Docket No. FAA–2008–0356; Directorate Identifier 2008–NM–042–AD.

Comments Due Date

(a) The FAA must receive comments on this AD action by April 24, 2008.

Affected ADs

(b) This AD supersedes AD 2008–04–02.

Applicability

(c) This AD applies to Bombardier Model DHC–8–400, DHC–8–401, and DHC–8–402 airplanes, certificated in any category; serial numbers 4001 and 4003 through 4176 inclusive.

Unsafe Condition

(d) This AD results from reports of cracking in the barrel nuts at the four primary front spar wing-to-fuselage attachment joints. We are issuing this AD to detect and correct cracking of the barrel nuts at the wing front spar wing-to-fuselage joints, which could result in reduced structural integrity of the wing-to-fuselage attachments and consequent detachment of the wing.

Compliance

(e) You are responsible for having the actions required by this AD performed within the compliance times specified, unless the actions have already been done.

Restatement of Requirements of AD 2008–04–02

Inspections and Corrective Actions

(f) Within 50 flight hours after February 13, 2008 (the effective date of AD 2008–04–02), inspect all barrel nuts, part number DSC228–16, to determine if the barrel nuts are identified with a marking of LH7940T SPS 01. Inspect in accordance with the Accomplishment Instructions of Bombardier Alert Service Bulletin A84–57–19, Revision A, dated February 6, 2008.

(1) If no barrel nuts are identified with a marking of LH7940T SPS 01, no further actions are required by this paragraph.

(2) If any barrel nut is found that is identified with a marking of LH7940T SPS 01, before further flight, inspect the inboard and outboard bolts to determine if the bolts are pre-loaded correctly. Inspect in accordance with the Accomplishment Instructions of Bombardier Alert Service Bulletin A84–57–19, Revision A, dated February 6, 2008.

(i) If the pre-load is incorrect (i.e., the ring can be rotated), before further flight, replace all hardware at that location in accordance with the Accomplishment Instructions of the alert service bulletin.

(ii) If the pre-load is correct, before further flight, do a visual inspection for cracking of the barrel nuts and cradles in accordance with the Accomplishment Instructions of the alert service bulletin.

(A) If no cracking of the barrel nut and cradle is found, do the applicable action required by paragraph (g) of this AD.

(B) If no cracking of the barrel nut is found and only cracking of the cradle is found, no action is required by this paragraph provided that the applicable corrective action specified in paragraph (g) of this AD is done.

(C) If any cracking of the barrel nut is found, before next flight, replace all hardware only at that location in accordance with the Accomplishment Instructions of the alert service bulletin.

(g) For any barrel nuts on which no cracking of the barrel nut was found during the inspection required by paragraph (f)(2)(ii) of this AD, do the applicable corrective action specified in paragraph (g)(1), (g)(2), (g)(3), (g)(4), or (g)(5) of this AD at the compliance time specified in the applicable paragraph.

(1) If four barrel nuts having no cracking are found, do the actions specified in paragraphs (g)(1)(i), (g)(1)(ii), and (g)(1)(iii) of this AD.

(i) Within 50 flight hours after doing the inspection required by paragraph (f)(2)(ii) of this AD, repeat the inspection specified in paragraph (f)(2) of this AD. Thereafter, repeat the inspection at intervals not to exceed 50 flight hours until the replacement specified in paragraph (g)(1)(ii) of this AD is done.

(ii) Within 100 flight hours after doing the inspection required by paragraph (f)(2)(ii) of this AD, replace all hardware at the left-hand outboard location and the right-hand outboard location in accordance with the Accomplishment Instructions of Bombardier Alert Service Bulletin A84–57–19, Revision A, dated February 6, 2008. Replacing the barrel nuts on the outboard locations terminates the requirement to do the repetitive inspections specified in paragraph (g)(1)(i) of this AD.

(iii) Within 100 flight hours after doing the replacement required by paragraph (g)(1)(ii) of this AD, repeat the inspection specified in paragraph (f)(2) of this AD for the remaining barrel nuts identified with a marking of LH7940T SPS 01. Thereafter, repeat the inspection at intervals not to exceed 100 flight hours until the replacement of all hardware at those locations is done. Do the inspection and replacement in accordance with the Accomplishment Instructions of Bombardier Alert Service Bulletin A84–57–19, Revision A, dated February 6, 2008.

(2) If three barrel nuts having no cracking are found, do the actions specified in paragraphs (g)(2)(i), (g)(2)(ii), and (g)(2)(iii) of this AD.

(i) Within 50 flight hours after doing the inspection required by paragraph (f)(2)(ii) of this AD, repeat the inspection specified in paragraph (f)(2) of this AD. Thereafter, repeat the inspection at intervals not to exceed 50 flight hours until the replacement specified in paragraph (g)(2)(ii) of this AD is done.

(ii) Within 100 flight hours after doing the inspection required by paragraph (f)(2)(ii) of this AD, replace all hardware for one affected barrel nut at the outboard location, on the side with two affected barrel nuts, in

accordance with the Accomplishment Instructions of Bombardier Alert Service Bulletin A84–57–19, Revision A, dated February 6, 2008. Replacing the barrel nut on the outboard location terminates the requirement to do the repetitive inspections specified in paragraph (g)(2)(i) of this AD.

(iii) Within 100 flight hours after doing the replacement required by paragraph (g)(2)(ii) of this AD, repeat the inspection specified in paragraph (f)(2) of this AD for the remaining barrel nuts identified with a marking of LH7940T SPS 01. Thereafter, repeat the inspection at intervals not to exceed 100 flight hours until the replacement of all hardware at those locations is done. Do the inspection and replacement in accordance with the Accomplishment Instructions of Bombardier Alert Service Bulletin A84–57–19, Revision A, dated February 6, 2008.

(3) If two barrel nuts having no cracking are found and both nuts are on the same side, do the actions specified in paragraphs (g)(3)(i), (g)(3)(ii), and (g)(3)(iii) of this AD.

(i) Within 100 flight hours after doing the inspection required by paragraph (f)(2)(ii) of this AD, repeat the inspection specified in paragraph (f)(2) of this AD. Thereafter, repeat the inspection at intervals not to exceed 100 flight hours until the replacement specified in paragraph (g)(3)(ii) of this AD is done.

(ii) Within 500 flight hours after doing the inspection required by paragraph (f)(2)(ii) of this AD, replace all hardware for one affected barrel nut at the outboard location that has two affected barrel nuts in accordance with the Accomplishment Instructions of Bombardier Alert Service Bulletin A84–57–19, Revision A, dated February 6, 2008. Replacing the barrel nut on the outboard location terminates the requirement to do the repetitive inspections specified in paragraph (g)(3)(i) of this AD.

(iii) Within 100 flight hours after doing the replacement required by paragraph (g)(3)(ii) of this AD, repeat the inspection specified in paragraph (f)(2) of this AD for the remaining barrel nut identified with a marking of LH7940T SPS 01. Thereafter, repeat the inspection at intervals not to exceed 100 flight hours until the replacement of all hardware at that location is done. Do the inspection and replacement in accordance with the Accomplishment Instructions of Bombardier Alert Service Bulletin A84–57–19, Revision A, dated February 6, 2008.

(4) If two barrel nuts having no cracking are found and are on opposite sides, within 100 flight hours after doing the inspection required by paragraph (f)(2)(ii) of this AD, repeat the inspection specified in paragraph (f)(2) of this AD. Thereafter, repeat the inspection at intervals not to exceed 100 flight hours until the replacement of all hardware at those locations is done. Do the inspection and replacement in accordance with the Accomplishment Instructions of Bombardier Alert Service Bulletin A84–57–19, Revision A, dated February 6, 2008.

(5) If one barrel nut having no cracking is found, within 100 flight hours after doing the inspection required by paragraph (f)(2)(ii) of this AD, repeat the inspection specified in paragraph (f)(2) of this AD. Thereafter, repeat the inspection at intervals not to exceed 100 flight hours until the replacement of all hardware at that location is done. Do the inspection and replacement in accordance with the Accomplishment Instructions of Bombardier Alert Service Bulletin A84–57–19, Revision A, dated February 6, 2008.

Actions Accomplished According to Previous Issue of Alert Service Bulletin

(h) Actions accomplished before February 13, 2008, in accordance with Bombardier Alert Service Bulletin A84–57–19, dated February 1, 2008, are acceptable for compliance with the corresponding actions specified in this AD.

Actions Accomplished According to Bombardier Alert Service Bulletin A84–57–18

(i) For airplanes on which the actions specified in Bombardier Alert Service Bulletin A84–57–18, dated January 16, 2008, were accomplished before February 13, 2008 and on which no barrel nuts were found that were identified with a marking of LH7940T SPS 01: No further action is required by this AD.

Parts Installation

(j) As of February 13, 2008, no person may install a barrel nut, part number DSC228–16, identified with a marking of LH7940T SPS 01, on any airplane.

New Requirement of This AD

Replacement of All Affected Barrel Nuts

(k) For airplanes on which barrel nuts are inspected in accordance with paragraph (g)(1)(iii), (g)(2)(iii), (g)(3)(iii), (g)(4), or (g)(5) of this AD: Within 3,000 flight hours after the effective date of this AD, replace all hardware for all remaining barrel nuts, part number DSC228–16, identified with a marking of LH7940T SPS 01. Do the replacement in accordance with the Accomplishment Instructions of Bombardier Alert Service Bulletin A84–57–19, Revision A, dated February 6, 2008. Replacement of all hardware for all affected barrel nuts constitutes terminating action for this AD.

Special Flight Permit

(l) Special flight permits, as described in Section 21.197 and Section 21.199 of the Federal Aviation Regulations (14 CFR 21.197 and 21.199), may be issued to operate the airplane to a location where the requirements of this AD can be accomplished but concurrence by the Manager, New York Aircraft Certification Office, FAA, is required prior to issuance of the special flight permit. Before using any approved special flight permits, notify your appropriate principal inspector (PI) in the FAA Flight Standards District Office (FSDO), or lacking a PI, your local FSDO. Special flight permits may be permitted provided that the conditions specified in paragraph (l)(1), (l)(2), (l)(3), (l)(4), and (l)(5) of this AD are met.

(1) Both the right-hand side and left-hand side of the airplane must have at least one barrel nut that is not within the suspect batch (i.e., barrel nut is not identified with a marking of LH7940T SPS 01). The barrel nuts that are not within the suspect batch must be in good working condition (i.e., no cracking of the barrel nut).

(2) No passengers and no cargo are onboard.

(3) Airplane must operate in fair weather conditions with a low risk of turbulence.

(4) Airplane must operate with reduced airspeed. For further information, contact Bombardier, Q Series 24 Hour Service Customer Response Center, at: Tel: 1–416–375–4000; Fax: 1–416–375–4539; E-mail: *thd.qseries@aero.bombardier.com*.

(5) All of the conditions specified in paragraphs (l)(1), (1)(2), (l)(3), and (l)(4) of this AD are on a case by case basis. Contact your appropriate principal inspector (PI) in the FAA Flight Standards District Office (FSDO), or lacking a PI, your local FSDO, for assistance.

Alternative Methods of Compliance (AMOCs)

(m)(1) The Manager, New York Aircraft Certification Office, FAA, has the authority to approve AMOCs for this AD, if requested in accordance with the procedures found in 14 CFR 39.19.

(2) To request a different method of compliance or a different compliance time for this AD, follow the procedures in 14 CFR 39.19. Before using any approved AMOC on any airplane to which the AMOC applies, notify your appropriate principal inspector (PI) in the FAA Flight Standards District Office (FSDO), or lacking a PI, your local FSDO.

Related Information

(n) Canadian emergency airworthiness directive CF–2008–11, dated February 5, 2008.

Issued in Renton, Washington, on March 17, 2008.

Ali Bahrami,

Manager, Transport Airplane Directorate, Aircraft Certification Service.

[FR Doc. E8–6054 Filed 3–24–08; 8:45 am]

BILLING CODE 4910–13–P

DEPARTMENT OF TRANSPORTATION

Federal Aviation Administration

14 CFR Part 71

[Docket No. FAA–2007–0092; Airspace Docket No. 07–AAL–18]

RIN 2120–AA66

Proposed Establishment of Colored and VOR Federal Airways; Alaska

AGENCY: Federal Aviation Administration (FAA), DOT.

ACTION: Notice of proposed rulemaking (NPRM).

SUMMARY: This action proposes to establish four Federal airways in the National Airspace System (NAS) to replace four non-part 95 routes in Alaska. The conversion of these non-part 95 routes would change uncharted nonregulatory airways requiring special

aircrew authorization to Federal Airways, thus adding to the instrument flight rules (IFR) airway and route infrastructure in Alaska. This proposal would establish three Very High Frequency Omnidirectional Range (VOR) Federal airways, and one Low/Medium Frequency (L/MF) Colored Federal airway.

DATES: Comments must be received on or before May 9, 2008.

ADDRESSES: Send comments on the proposal to the Docket Management Facility, U.S. Department of Transportation, Docket Operations, M–30, 1200 New Jersey Avenue, SE., West Building Ground Floor, Room W12–140, Washington, DC 20590–0001; telephone: (202) 366–9826. You must identify FAA Docket No. FAA–2007–0092 and Airspace Docket No. 07–AAL–18, at the beginning of your comments. You may also submit comments on the Internet at: *http://www.regulations.gov.*

FOR FURTHER INFORMATION CONTACT: Ken McElroy, Airspace and Rules Group, Office of System Operations Airspace and AIM, Federal Aviation Administration, 800 Independence Avenue, SW., Washington, DC 20591; telephone: (202) 267–8783.

SUPPLEMENTARY INFORMATION:

Comments Invited

Interested parties are invited to participate in this proposed rulemaking by submitting such written data, views, or arguments as they may desire. Comments that provide the factual basis supporting the views and suggestions presented are particularly helpful in developing reasoned regulatory decisions on the proposal. Comments are specifically invited on the overall regulatory, aeronautical, economic, environmental, and energy-related aspects of the proposal.

Communications should identify both docket numbers (FAA Docket No. FAA–2007–0092 and Airspace Docket No. 07–AAL–18) and be submitted in triplicate to the Docket Management Facility (see **ADDRESSES** section for address and phone number). You may also submit comments through the Internet at *http://www.regulations.gov.*

Commenters wishing the FAA to acknowledge receipt of their comments on this action must submit with those comments a self-addressed, stamped postcard on which the following statement is made: ''Comments to Docket No. FAA–2007–0092 and Airspace Docket No. 07–AAL–18.'' The postcard will be date/time stamped and returned to the commenter.

All communications received on or before the specified closing date for comments will be considered before taking action on the proposed rule. The proposal contained in this action may be changed in light of comments received. All comments submitted will be available for examination in the public docket both before and after the closing date for comments. A report summarizing each substantive public contact with FAA personnel concerned with this rulemaking will be filed in the docket.

Availability of NPRMs

An electronic copy of this document may be downloaded through the Internet at: *http://www.regulations.gov.* Recently published rulemaking documents can also be accessed through the FAA's Web page at: *http://www.faa.gov* or the Federal Register's Web page at *http://www.gpoaccess.gov/fr/index.html.*

You may review the public docket containing the proposal, any comments received, and any final disposition in person in the Dockets Office (see **ADDRESSES** section for address and phone number) between 9 a.m. and 5 p.m., Monday through Friday, except Federal holidays. An informal docket may also be examined during normal business hours at the office of the Regional Air Traffic Division, Federal Aviation Administration, 222 West 7th Avenue, Box 14, Anchorage, AK 99513–7587.

The Proposal

The FAA is proposing an amendment to Title 14 Code of Federal Regulations (14 CFR part 71) to establish three VOR Federal airways, and one colored Federal airway, in Alaska. Presently there are uncharted nonregulatory routes that use the same routing as the proposed Federal airways. These uncharted nonregulatory routes are used daily by commercial and general aviation aircraft. The FAA is proposing to convert these uncharted nonregulatory routes to the Federal airways to add to the IFR route structure in Alaska. The Colored Federal airway would be designated as Amber 6, and would connect the St. Marys NDB with the North River NDB. The first VOR Federal airway would be designated as V–351, and would connect the Port Heiden NDB/DME with the Dillingham VOR/DME. The second Federal airway would be designated as V–619, and would connect the Port Heiden NDB/DME with the Saldo NDB, then to the Dillingham VOR/DME. The third Federal airway would be designated as V–414, and would connect the Gambell NDB/DME with the Kukuliak VOR/DME. Additionally, adoption of these Federal airways would: (1) Provide pilots with minimum en route altitudes and minimum obstruction clearance altitudes information; (2) establish controlled airspace thus eliminating some of the commercial IFR operations in uncontrolled airspace; and (3) improve the management of air traffic operations and thereby enhance safety.

The area would be depicted on aeronautical charts for pilot reference. The coordinates for this airspace docket are based on North American Datum 83. The Airways designated as Colored Federal Airways are published in paragraph 6009 in FAA Order 7400.9R, Airspace Designations and Reporting Points, signed August 15, 2007, and effective September 15, 2007, which is incorporated by reference in 14 CFR 71.1. The Airways designated as VOR Federal Airways are published in paragraph 6010 in FAA Order 7400.9R, Airspace Designations and Reporting Points, signed August 15, 2007, and effective September 15, 2007, which is incorporated by reference in 14 CFR 71.1. The airspace designations listed in this document would be published subsequently in the Order.

The FAA has determined that this proposed regulation only involves an established body of technical regulations for which frequent and routine amendments are necessary to keep them operationally current. Therefore, this proposed regulation: (1) Is not a ''significant regulatory action'' under Executive Order 12866; (2) is not a ''significant rule'' under Department of Transportation (DOT) Regulatory Policies and Procedures (44 FR 11034; February 26, 1979); and (3) does not warrant preparation of a regulatory evaluation as the anticipated impact is so minimal. Since this is a routine matter that will only affect air traffic procedures and air navigation, it is certified that this proposed rule, when promulgated, will not have a significant economic impact on a substantial number of small entities under the criteria of the Regulatory Flexibility Act.

The FAA's authority to issue rules regarding aviation safety is found in Title 49 of the United States Code. Subtitle 1, Section 106 describes the authority of the FAA Administrator. Subtitle VII, Aviation Programs, describes in more detail the scope of the agency's authority.

This rulemaking is promulgated under the authority described in Subtitle VII, Part A, Subpart 1, Section 40103. Under that section, the FAA is charged with prescribing regulations to ensure the safe and efficient use of the navigable airspace. This regulation is within the scope of that authority as it

proposes to create Class E airspace sufficient in size to contain aircraft using the described Federal Airways within the State of Alaska and represents the FAA's continuing effort to safely and efficiently use the navigable airspace.

Environmental Review

The FAA has determined that this action qualifies for categorical exclusion under the National Environmental Policy Act in accordance with FAA Order 1050.1E, ''Environmental Impacts: Policies and Procedures,'' paragraph 311a. This airspace action is not expected to cause any potentially significant environmental impacts, and no extraordinary circumstances exist that warrant preparation of an environmental assessment.

List of Subjects in 14 CFR Part 71

Airspace, Incorporation by reference, Navigation (air).

The Proposed Amendment

In consideration of the foregoing, the Federal Aviation Administration proposes to amend 14 CFR part 71 as follows:

PART 71—DESIGNATION OF CLASS A, B, C, D, AND E AIRSPACE AREAS; AIR TRAFFIC SERVICE ROUTES; AND REPORTING POINTS

1. The authority citation for part 71 continues to read as follows:

Authority: 49 U.S.C. 106(g), 40103, 40113, 40120; E.O. 10854, 24 FR 9565, 3 CFR, 1959–1963 Comp., p. 389.

§ 71.1 [Amended]

2. The incorporation by reference in 14 CFR 71.1 of FAA Order 7400.9R, Airspace Designations and Reporting Points, signed August 15, 2007, and effective September 15, 2007, is amended as follows:

Paragraph 6009(c) Amber Federal Airways.

* * * * *

A–6 [New]

St. Marys, AK, NDB; to North River, AK, NDB.

* * * * *

Paragraph 6010(b) Alaskan VOR Federal Airways.

* * * * *

V–351 [New]

From Port Heiden, AK, NDB/DME; to Dillingham, AK, VOR/DME.

* * * * *

V–619 [New]

From Port Heiden, AK, NDB/DME; Saldo, AK, NDB; to Dillingham, AK, VOR/DME.

* * * * *

V–414 [New]

Gambell, AK, NDB/DME; to Kukuliak, AK, VOR/DME.

* * * * *

Issued in Washington, DC, March 17, 2008.

Stephen L. Rohring,

Acting Manager, Airspace and Rules Group.

[FR Doc. E8–5922 Filed 3–24–08; 8:45 am]

BILLING CODE 4910–13–P

DEPARTMENT OF THE TREASURY

Internal Revenue Service

26 CFR Part 301

[REG–114942–07]

RIN 1545–BG73

Disclosure of Return Information in Connection With Written Contracts Among the IRS, Whistleblowers, and Legal Representatives of Whistleblowers

AGENCY: Internal Revenue Service (IRS), Treasury.

ACTION: Notice of proposed rulemaking by cross-reference to temporary regulations.

SUMMARY: In the Rules and Regulations section of this issue of the **Federal Register**, the IRS is issuing temporary regulations relating to the disclosure of return information, pursuant to section 6103(n), to whistleblowers and their legal representatives. The temporary regulations describe the circumstances by which an officer or employee of the Treasury Department may disclose return information to a whistleblower and, if applicable, the legal representative of the whistleblower, to the extent necessary in connection with a written contract among the IRS, the whistleblower and, if applicable, the legal representative of the whistleblower, for services relating to the detection of violations of the internal revenue laws or related statutes. The temporary regulations will affect officers and employees of the Treasury Department who disclose return information to whistleblowers, or their legal representatives, in connection with written contracts among the IRS, whistleblowers and, if applicable, their legal representatives, for services relating to the detection of violations of the internal revenue laws or related statutes. The temporary regulations will also affect any whistleblower, or legal representative of a whistleblower, who receives return information in connection with a written contract among the IRS, the whistleblower and, if applicable, the legal representative of the whistleblower, for services relating to the detection of violations of the internal revenue laws or related statutes.

DATES: Written or electronic comments and requests for a public hearing must be received by June 23, 2008.

ADDRESSES: Send submissions to CC:PA:LPD:PR (REG–114942–07), room 5203, Internal Revenue Service, PO Box 7604, Ben Franklin Station, Washington, DC 20044. Submissions may be hand-delivered Monday through Friday between the hours of 8 a.m. and 4 p.m. to CC:PA:LPD:PR (REG–114942–07), Courier's Desk, Internal Revenue Service, 1111 Constitution Avenue, NW., Washington, DC, or sent electronically, via the Federal eRulemaking Portal at *http://www.regulations.gov* (IRS–REG–114942–07).

FOR FURTHER INFORMATION CONTACT: Helene R. Newsome, 202–622–7950 (not a toll-free number).

SUPPLEMENTARY INFORMATION:

Background and Explanation of Provisions

Temporary regulations in the Rules and Regulations section of this issue of the **Federal Register** amend the Procedure and Administration Regulations (26 CFR part 301) under section 6103(n) relating to the disclosure of return information in connection with written contracts among the IRS, whistleblowers and, if applicable, their legal representatives.

The Tax Relief and Health Care Act of 2006, Public Law 109–432 (120 Stat. 2958) (the Act), was enacted on December 20, 2006. Section 406 of the Act amends section 7623, concerning the payment of awards to whistleblowers, and establishes a Whistleblower Office within the IRS that has responsibility for the administration of a whistleblower program. The Whistleblower Office, in connection with administering a whistleblower program, will analyze information provided by a whistleblower, and either investigate the matter itself or assign it to the appropriate IRS office for investigation. In analyzing information provided by a whistleblower, or investigating a matter, the Whistleblower Office may determine that it requires the assistance of the whistleblower, or the legal representative of the whistleblower. The legislative history of section 406 of the

Act states that ''[t]o the extent the disclosure of returns or return information is required [for the whistleblower or his or her legal representative] to render such assistance, the disclosure must be pursuant to an IRS tax administration contract.'' Joint Committee of Taxation, *Technical Explanation of H.R. 6408, The ''Tax Relief and Health Care Act of 2006,''* as Introduced in the House on December 7, 2006, at 89 (JCX–50–06), December 7, 2006. The legislative history further states that ''[i]t is expected that such disclosures will be infrequent and will be made only when the assigned task cannot be properly or timely completed without the return information to be disclosed.'' *Id.*

Under section 6103(a), returns and return information are confidential unless the Internal Revenue Code (Code) authorizes disclosure. Section 6103(n) is the authority by which returns and return information may be disclosed pursuant to a tax administration contract. Section 6103(n) authorizes, pursuant to regulations prescribed by the Secretary, returns and return information to be disclosed to any person, including any person described in section 7513(a), for purposes of tax administration, to the extent necessary in connection with: (1) The processing, storage, transmission, and reproduction of returns and return information; (2) the programming, maintenance, repair, testing, and procurement of equipment; and (3) the providing of other services. These proposed regulations describe the circumstances, pursuant to section 6103(n), by which officers and employees of the Treasury Department may disclose return information to whistleblowers and, if applicable, their legal representatives, in connection with written contracts for services relating to the detection of violations of the internal revenue laws or related statutes.

The text of the temporary regulations also serves as the text of these proposed regulations. The preamble to the temporary regulations explains these proposed regulations.

Special Analyses

It has been determined that this notice of proposed rulemaking is not a significant regulatory action as defined in Executive Order 12866. Therefore, a regulatory assessment is not required. It also has been determined that section 553(b) of the Administrative Procedure Act (5 U.S.C. chapter 5) does not apply to these regulations, and because the regulations do not impose a collection of information on small entities, the Regulatory Flexibility Act (5 U.S.C. chapter 6) does not apply. Pursuant to section 7805(f) of the Code, these regulations have been submitted to the Chief Counsel of the Small Business Administration for comment on its impact on small businesses.

Comments and Request for a Public Hearing

Before these proposed regulations are adopted as final regulations, consideration will be given to any electronic and written comments (a signed original and eight (8) copies) that are submitted timely to the IRS. The IRS and Treasury Department request comments on the clarity of the proposed rule and how it may be made easier to understand. All comments will be available for public inspection and copying. A public hearing may be scheduled if requested in writing by a person that timely submits written comments. If a public hearing is scheduled, notice of the date, time, and place of the hearing will be published in the **Federal Register**.

Drafting Information

The principal author of these regulations is Helene R. Newsome, Office of the Associate Chief Counsel (Procedure & Administration).

List of Subjects in 26 CFR Part 301

Employment taxes, Estate taxes, Excise taxes, Gift taxes, Income taxes, Penalties, Reporting and recordkeeping requirements.

Proposed Amendments to the Regulations

Accordingly, 26 CFR part 301 is proposed to be amended as follows:

PART 301—PROCEDURE AND ADMINISTRATION

Paragraph 1. The authority citation for part 301 is amended by adding an entry in numerical order to read as follows:

Authority: 26 U.S.C. 7805 * * *

Section 301.6103(n)–2 also issued under 26 U.S.C. 6103(n); * * *

Par. 2. Section 301.6103(n)–2 is added to read as follows:

§ 301.6103(n)–2 Disclosure of return information in connection with written contracts among the IRS, whistleblowers, and legal representatives of whistleblowers.

[The text of this proposed section is the same as the text of § 301.6103(n)–2T published elsewhere in this issue of the **Federal Register**.]

Linda E. Stiff,

Deputy Commissioner for Services and Enforcement.

[FR Doc. E8–6040 Filed 3–24–08; 8:45 am]

BILLING CODE 4830–01–P

DEPARTMENT OF LABOR

Employee Benefits Security Administration

29 CFR Part 2540

RIN 1210–AB26

Model Notice of Multiemployer Plan in Critical Status

AGENCY: Employee Benefits Security Administration, Labor.

ACTION: Proposed rule.

SUMMARY: The Pension Protection Act of 2006 amended the Employee Retirement Income Security Act (ERISA) and the Internal Revenue Code (Code) to require that sponsors of multiemployer defined benefit pension plans that are in, or will be in, endangered or critical status for a plan year provide notice of this status to participants, beneficiaries, the bargaining parties, the Pension Benefit Guaranty Corporation and the Department of Labor. This document contains a model notice that is intended to facilitate compliance with this notification requirement under ERISA and the Code.

DATES: Written comments should be received by the Department of Labor on or before April 24, 2008.

ADDRESSES: You may submit comments, identified by RIN 1210–AB26, by one of the following methods:

- *Federal eRulemaking Portal: http://www.regulations.gov.* Follow the instructions for submitting comments.
- *E-mail: e-ORI@dol.gov.* Include ''Notice of Critical Status: RIN 1210–AB26'' in the subject line of the message.
- *Mail:* Office of Regulations and Interpretations, Employee Benefits Security Administration, Room N–5655, U.S. Department of Labor, 200 Constitution Avenue, NW., Washington, DC 20210, Attention: Model Notice of Critical Status.

Instructions: All submissions received must include the agency name and Regulatory Information Number (RIN) for this rulemaking. Comments received will be posted without change to *http://www.regulations.gov* and *http://www.dol.gov/ebsa,* and available for public inspection at the Public Disclosure Room, N–1513, Employee Benefits Security Administration, 200 Constitution Avenue, NW., Washington, DC 20210, including any personal information provided. Persons submitting comments electronically are encouraged not to submit paper copies.

FOR FURTHER INFORMATION CONTACT: Susan Elizabeth Rees, Office of

Regulations and Interpretations, Employee Benefits Security Administration (EBSA), U.S. Department of Labor, (202) 693–8500. This is not a toll-free number.

SUPPLEMENTARY INFORMATION:

A. Background

Section 202 of the Pension Protection Act of 2006, Public Law 109–280 (PPA), amended the Employee Retirement Income Security Act of 1974 (ERISA or Act) by adding section 305, and section 212 of the PPA amended the Internal Revenue Code (Code) by adding section 432, to provide additional rules for multiemployer defined benefit pension plans in endangered status or critical status. All references to section 305 of ERISA should be read to include section 432 of the Code. Pursuant to Reorganization Plan No. 4, the Department of the Treasury has interpretive authority over the minimum funding rules of Title I of ERISA, including section 305 of ERISA.[1]

In general, section 305(b)(3)(A) of ERISA provides that not later than the 90th day of each plan year, the actuary of a multiemployer defined benefit pension plan shall certify to the Secretary of the Treasury and to the plan sponsor[2]—(i) whether or not the plan is in endangered status for such plan year and whether or not the plan is or will be in critical status for such plan year, and (ii) in the case of a plan which is in a funding improvement or rehabilitation period, whether or not the plan is making the scheduled progress in meeting the requirements of its funding improvement or rehabilitation plan.

Section 305(b)(3)(D)(i) of ERISA provides that, in any case in which it is certified under section 305(b)(3)(A) that a multiemployer plan is or will be in endangered or critical status for a plan year, the plan sponsor shall, not later than 30 days after the date of the certification, provide notification of the endangered or critical status to participants and beneficiaries, the bargaining parties, the Pension Benefit Guaranty Corporation, and the Secretary of Labor.

Section 305(b)(3)(D)(ii) of ERISA provides that if it is certified under section 305(b)(3)(A) that a multiemployer plan is or will be in critical status, the plan sponsor shall include in the notice an explanation of the possibility that—(i) adjustable benefits (as defined in section 305(e)(8) of ERISA) may be reduced, and (ii) such reductions may apply to participants and beneficiaries whose benefit commencement date is on or after the date such notice is provided for the first plan year in which the plan is in critical status.

Section 305(b)(3)(D)(iii) provides that the Secretary of Labor shall prescribe a model notice that a multiemployer plan may use to satisfy the requirements of section 305(b)(3)(D)(ii) of ERISA. The Department consulted with both the PBGC and the IRS in developing the model notice.

Other provisions in section 305 define when a plan is in endangered or critical status and what corrective steps must be taken, by when, and by whom. These other provisions are beyond the scope of this notice. The Department of the Treasury and IRS have advised that they are developing guidance on these other provisions.

Section 202(f)(1) of the PPA provides, generally, that the amendments made by this section shall apply with respect to plan years beginning after 2007, while section 202(f)(3) provides a special rule in the case of plans having certain restored benefits.

Section 202(f)(2) of the PPA provides that in any case in which a plan's actuary certifies that it is reasonably expected that a multiemployer plan will be in critical status under section 305(b)(3) of the ERISA, with respect to the first plan year beginning after 2007, the notice required under section 305(b)(3)(D) of ERISA may be provided at any time after the date of enactment, so long as it is provided on or before the last date for providing the notice under such subparagraph.

B. Model

Pursuant to section 305(b)(3)(D)(iii) of ERISA, the Department is publishing a model notice, entitled Notice of Critical Status, that a multiemployer plan may use to satisfy the content requirements of section 305(b)(3)(D) of ERISA.[3] The IRS advises that it will consider the sponsor of a plan in critical status who uses the model notice to notify participants and others of the status of the plan to have satisfied its content obligations under 432(b)(3)(D) of the Code. While the model notice contained in this document specifically relates to plans in critical status, the Department believes that the model may be useful in preparing notices required to be furnished by plans in endangered status.

To discharge the obligation to furnish a notice to the Department of Labor, plans may mail notices to U.S. Department of Labor, Employee Benefits Security Administration, Public Disclosure Room, N–1513, 200 Constitution Ave., NW., Washington, DC 20210. Alternatively, notices may be e-mailed to *criticalstatusnotice@dol.gov.* Critical Status notices received by the Department will be available for public inspection at the Public Disclosure Room, and accessible on EBSA's Web site at: *http://www.dol.gov/ebsa.*

To discharge the obligation to furnish a notice to the Pension Benefit Guaranty Corporation, plans may mail notices to Multiemployer Program Division, Pension Benefit Guaranty Corporation, 1200 K Street, NW., Suite 930, Washington, DC 20005. Alternatively, notices may be e-mailed to *multiemployerprogram@pbgc.gov.*

C. Effective Date

This regulation will be effective 60 days after the date of publication of the final regulation in the **Federal Register**. However, because section 305(b)(3)(D) of ERISA and section 432(b)(3)(D) of the Code are effective with respect to plan years beginning after 2007, the Department, as well as Treasury and IRS, will, for purposes of notices required to be furnished prior to the effective date of a final regulation, view utilization of the model notice contained in this document, if accurately completed and timely furnished, as satisfying the notice requirements of section 305(b)(3)(D) of ERISA and 432(b)(3)(D) of the Code.

D. Regulatory Impact Analysis

Summary

The Notice of Critical Status (''Model Notice'') in paragraph (b) of the proposed regulation will help sponsors of plans in critical status who use the model notice to satisfy their obligations under section 305(b)(3)(D) of ERISA and section 432(b)(3)(D) of the Code. While the Model Notice is not mandatory, the sponsor of a plan in critical status who uses the model notice to notify participants and others of the status of the plan will be considered to have satisfied its obligations under ERISA and the Code. The anticipated benefit of the Model Notice, therefore, is to help plan sponsors fulfill their disclosure responsibilities with greater certainty and less cost.

[1] Reorganization Plan No. 4 of 1978, 43 FR 47713 (Oct. 17, 1978).

[2] Section 3(16)(B)(ii) of ERISA defines the term ''plan sponsor'' to mean, in the case of a plan established or maintained by two or more employers or jointly by one or more employers and one or more employee organizations, the association, committee, joint board of trustees, or other similar group of representatives of the parties who establish or maintain the plan.

[3] Plans may not use the model notice published herein to satisfy the notice requirement under section 305(e)(8)(C) of ERISA.

Executive Order 12866

Under Executive Order 12866 (58 FR 51735), the Department must determine whether a regulatory action is ''significant'' and therefore subject to review by the Office of Management and Budget (OMB). Section 3(f) of the Executive Order defines a ''significant regulatory action'' as an action that is likely to result in a rule (1) having an annual effect on the economy of $100 million or more, or adversely and materially affecting a sector of the economy, productivity, competition, jobs, the environment, public health or safety, or State, local or tribal governments or communities (also referred to as ''economically significant''); (2) creating serious inconsistency or otherwise interfering with an action taken or planned by another agency; (3) materially altering the budgetary impacts of entitlement grants, user fees, or loan programs or the rights and obligations of recipients thereof; or (4) raising novel legal or policy issues arising out of legal mandates, the President's priorities, or the principles set forth in the Executive Order. It has been determined that this action is not significant under section 3(f) of the Executive Order.

Paperwork Reduction Act

As part of its continuing effort to reduce paperwork and respondent burden, the Department conducts a preclearance consultation program to provide the general public and federal agencies with an opportunity to comment on proposed and continuing collections of information in accordance with the Paperwork Reduction Act of 1995 (PRA) (44 U.S.C. 3506(c)(2)(A)). This helps to ensure that requested data can be provided in the desired format, reporting burden (time and financial resources) is minimized, collection instruments are clearly understood, and the impact of collection requirements on respondents can be properly assessed.

The Department is not soliciting comments concerning an information collection request (ICR) pertaining to the Model Notice. As noted above, pursuant to Reorganization Plan No. 4, the Department of the Treasury has interpretive authority over the minimum funding rules of Title I of ERISA, including section 305 of ERISA, and it has advised that it is developing guidance under this provision. Costs and burdens associated with complying with the notice requirement in section 305(b)(3)(D) of ERISA and section 432(b)(3)(D) of the Code, therefore, will be accounted for in an ICR associated with the Treasury guidance. To the extent the Model Notice includes an ICR, persons are not required to respond to, and generally are not subject to any penalty for failing to comply with, the ICR unless the ICR has a valid OMB control number.[4]

Regulatory Flexibility Act

The Regulatory Flexibility Act (5 U.S.C. 601 *et seq.*) (RFA) imposes certain requirements with respect to Federal rules that are subject to the notice and comment requirements of section 553(b) of the Administrative Procedure Act (5 U.S.C. 551 *et seq.*) and which are likely to have a significant economic impact on a substantial number of small entities. Unless an agency certifies that a proposed rule is not likely to have a significant economic impact on a substantial number of small entities, section 603 of RFA requires that the agency present an initial regulatory flexibility analysis at the time of the publication of the notice of proposed rulemaking describing the impact of the rule on small entities and seeking public comment on such impact. Small entities include small businesses, organizations and governmental jurisdictions.

The Department has deemed that an employee benefit plan shall be considered a small entity if it has fewer than 100 participants.[5] By this standard, data from the EBSA Private Pension Bulletin 2004 (the latest available information) show that only 67 multiemployer pension plans or 4% of all multiemployer pension plans are small entities. The Department does not consider this to be a substantial number of small entities. Therefore, pursuant to section 605(b) of RFA, the Department hereby certifies that the proposed rule is not likely to have a significant economic impact on a substantial number of small entities. Further, to the Department's knowledge, there are no federal regulations that might duplicate, overlap, or conflict with the proposed rule.

Congressional Review Act

The Model Notice being issued here is subject to the Congressional Review Act provisions of the Small Business Regulatory Enforcement Fairness Act of 1996 (5 U.S.C. 801 *et seq.*) and, if finalized, will be transmitted to Congress and the Comptroller General for review.

Unfunded Mandates Reform Act

For purposes of the Unfunded Mandates Reform Act of 1995 (Pub. L. 104–4), as well as Executive Order 12875, the proposal does not include any Federal mandate that may result in expenditures by State, local, or tribal governments, and does not impose an annual burden exceeding $100 million on the private sector, adjusted for inflation.

Federalism Statement

Executive Order 13132 (August 4, 1999) outlines fundamental principles of federalism, and requires the adherence to specific criteria by Federal agencies in the process of their formulation and implementation of policies that have substantial direct effects on the States, the relationship between the national government and States, or on the distribution of power and responsibilities among the various levels of government. This proposed rule does not have federalism implications because it has no substantial direct effect on the States, on the relationship between the national government and the States, or on the distribution of power and responsibilities among the various levels of government. Section 514 of ERISA provides, with certain exceptions specifically enumerated, that the provisions of Titles I and IV of ERISA supersede any and all laws of the States as they relate to any employee benefit plan covered under ERISA. The proposed rule does not alter the fundamental reporting and disclosure requirements of the statute with respect to employee benefit plans, and as such have no implications for the States or the relationship or distribution of power between the national government and the States.

List of Subjects in 29 CFR Part 2540

Employee benefit plans, Pension plans, Multiemployer plans.

For the reasons set forth above, the Department proposes to amend Chapter XXV of Title 29 of the Code of Federal Regulations by adding Subchapter E to read as follows:

Subchapter E—Funding

PART 2540—MINIMUM FUNDING STANDARDS

Authority: 29 U.S.C. 1135 and Secretary of Labor's Order No. 1–2003, 68 FR 5374 (Feb. 3, 2003). Section 2540.305–1 is also issued under 29 U.S.C. 1085(b)(3)(D)(iii).

[4] See 5 CFR 1320.1 through 1320.18.

[5] The basis for this definition is found in section 104(a)(2) of the Act, which permits the Secretary of Labor to prescribe simplified annual reports for pension plans that cover fewer than 100 participants.

§ 2540.305–1 Model Notice of Critical Status for Multiemployer Plans.

(a) Pursuant to section 305(b)(3)(D)(iii) of the Employee Retirement Income Security Act of 1974 (ERISA or Act), paragraph (b) of this section provides a model notice that a multiemployer plan may use to satisfy the content requirements under section 305(b)(3)(D) of ERISA and section 432(b)(3)(D) of the Code. Use of the model notice is not mandatory. However, the plan sponsor of a plan in critical status who uses the model notice to notify participants and others of the status of the plan is considered to have satisfied its content obligations under section 305(b)(3)(D) of ERISA and section 432(b)(3)(D) of the Code.

(b) Model notice:

BILLING CODE 4510–29–P

Notice of Critical Status
For
[Insert name of pension plan]

This is to inform you that on [*enter date*] the plan actuary certified to the U.S. Department of the Treasury, and also to the plan sponsor, that the plan [*enter "is" or "will be"*] in critical status for the plan year beginning [*enter beginning date of plan year*]. Federal law requires that you receive this notice.

Critical Status

The plan is considered to be in critical status because it has funding or liquidity problems, or both. More specifically, the plan's actuary determined that [*complete and insert appropriate explanation(s) from the options below*].

{Option one: "the plan's funded percentage for [enter plan year] is less than 65 %, and the sum of the fair market value of its current assets plus the present value of expected employer contributions through [enter end of the 6th plan year following the current plan year] is less than the present value of all benefits projected to be payable (plus administrative expenses) through [enter end of the 6th plan year following the current plan year."}

{Option two: "the plan has an accumulated funding deficiency for the current plan year."}

{Option three: "over the next three plan years, the plan is projected to have an accumulated funding deficiency for the [enter appropriate plan year or years]."}

{Option four: "the funded percentage of the plan is 65% or less, and over the next four plan years, the plan is projected to have an accumulated funding deficiency for the [enter appropriate plan year or years]."}

{Option five: "the sum of the plan's normal cost and interest on the unfunded benefits for the current plan year exceeds the present value of all expected contributions for the year; the present value of vested benefits of inactive participants is greater than the present value of vested benefits of active participants; and the plan has an accumulated funding deficiency for the current plan year."}

{Option six: "the sum of the plan's normal cost and interest on the unfunded benefits for the current plan year exceeds the present value of all expected contributions for the year; the present value of vested benefits of inactive participants is greater than the present value of vested benefits of active participants; and over the next four plan years, the plan is projected to have an accumulated funding deficiency for the [enter appropriate plan year or years]."}.

{Option seven: "the sum of the fair market value of the plan's current assets plus the present value of expected employer contributions through [enter date that is the end of the plan year that is the 4th plan year following the current plan year] is less than the present value of all benefits payable through [enter date that is the end of the plan year that is the 4th plan year following the current plan year]."}

{Option eight: "the plan was in critical status last year and over the next 9 years, the plan is projected to have an accumulated funding deficiency for the [enter appropriate plan year or years]."}

{Instructions: Insert the following discussion entitled Rehabilitation Plan and Possibility of Reduction in Benefits only if the plan is in critical status and adjustable benefits have not yet

been reduced (e.g., the initial critical status year). Where adjustable benefits have already been reduced, insert the discussion below entitled Rehabilitation Plan.}

Rehabilitation Plan and Possibility of Reduction in Benefits

Federal law requires pension plans in critical status to adopt a rehabilitation plan aimed at restoring the financial health of the plan. The law permits pension plans to reduce, or even eliminate, benefits called "adjustable benefits" as part of a rehabilitation plan. If the trustees of the plan determine that benefit reductions are necessary, you will receive a separate notice in the future identifying and explaining the effect of those reductions. Any reduction of adjustable benefits (other than a repeal of a recent benefit increase, as described below) will not reduce the level of a participant's basic benefit payable at normal retirement. In addition, the reductions may only apply to participants and beneficiaries whose benefit commencement date is on or after [*enter the date notice is or was provided for the first plan year in which the plan is in critical status*]. But you should know that whether or not the plan reduces adjustable benefits in the future, effective as of [*enter date notice is or was provided for the first plan year in which the plan is in critical status or January 1, 2008, whichever is later*], the plan is not permitted to pay lump sum benefits (or any other payment in excess of the monthly amount paid under a single life annuity) while it is in critical status.

Rehabilitation Plan

Federal law requires pension plans in critical status to adopt a rehabilitation plan aimed at restoring the financial health of the plan. This is the [*enter number*] year the plan has been in critical status. The law permits pension plans to reduce, or even eliminate, benefits called "adjustable benefits" as part of a rehabilitation plan. On [*enter date*], you were notified that the plan reduced or eliminated adjustable benefits. On [*enter date of initial critical status notice*], you were notified that as of [*enter date*] the plan is not permitted to pay lump sum benefits (or any other payment in excess of the monthly amount paid under a single life annuity) while it is in critical status. If the trustees of the plan determine that further benefit reductions are necessary, you will receive a separate notice in the future identifying and explaining the effect of those reductions. Any reduction of adjustable benefits (other than a repeal of a recent benefit increase, as described below) will not reduce the level of a participant's basic benefit payable at normal retirement. In addition, the reductions may only apply to participants and beneficiaries whose benefit commencement date is on or after [*enter the date notice is or was provided for the first plan year in which the plan is in critical status*].

Adjustable Benefits

The plan offers the following adjustable benefits which may be reduced or eliminated as part of any rehabilitation plan the pension plan may adopt [*check appropriate box or boxes*]:

- ☐ Post-retirement death benefits;
- ☐ Sixty-month payment guarantees;

- ☐ Disability benefits (if not yet in pay status);
- ☐ Early retirement benefit or retirement-type subsidy;
- ☐ Benefit payment options other than a qualified joint-and survivor annuity (QJSA);
- ☐ Recent benefit increases (i.e, occurring in past 5 years);
- ☐ Other similar benefits, rights, or features under the plan {provide identification}

_____

_____

_____

Employer Surcharge

The law requires that all contributing employers pay to the plan a surcharge to help correct the plan's financial situation. The amount of the surcharge is equal to a percentage of the amount an employer is otherwise required to contribute to the plan under the applicable collective bargaining agreement. With some exceptions, a 5% surcharge is applicable in the initial critical year and a 10% surcharge is applicable for each succeeding plan year thereafter in which the plan is in critical status.

Where to Get More Information

For more information about this Notice, you may contact [*enter name of plan administrator*] at [*enter phone number and address (including e- mail address if appropriate)*]. You have a right to receive a copy of the rehabilitation plan from the plan.

Signed at Washington, DC, this 18th day of March, 2008.

Bradford P. Campbell,

Assistant Secretary, Employee Benefits Security Administration, Department of Labor.

[FR Doc. E8–5855 Filed 3–24–08; 8:45 am]

BILLING CODE 4510–29–C

DEPARTMENT OF AGRICULTURE

Forest Service

36 CFR Parts 223, 228, 261, 292, and 293

RIN 0596–AB98

Locatable Minerals Operations

AGENCY: Forest Service, USDA.

ACTION: Proposed rule; request for comments.

SUMMARY: This proposed rule would revise the regulations for locatable minerals operations conducted on National Forest System lands. The revised rule would apply to prospecting, exploration, development, mining and processing operations, and reclamation under the Mining Law of May 10, 1872, as amended. The Forest Service invites written comments on this proposed rule.

DATES: Comments must be received by May 27, 2008. Pursuant to the Paperwork Reduction Act, comments on the information collection burden that would result from this proposal must be received by May 27, 2008.

ADDRESSES: Send written comments to Forest Service, USDA, Attn: Director, Minerals and Geology Management (MGM) Staff, (2810), Mail Stop 1126, Washington, DC 20250–1125; by electronic mail to *36cfr228a@fs.fed.us*; by fax to (703) 605–1575; or by the electronic process available at Federal eRulemaking portal at *http://www.regulations.gov*. If comments are sent by electronic mail or by fax, the public is requested not to send duplicate written comments via regular mail. Please confine written comments to issues pertinent to the proposed rule; explain the reasons for any recommended changes; and, where possible, reference the specific wording being addressed. All comments, including names and addresses when provided, will be placed in the record and will be available for public inspection and copying. The public may inspect comments received on the proposed rule in the Office of the Director, MGM Staff, 5th Floor, Rosslyn Plaza Central, 1601 North Kent Street, Arlington, Virginia, on business days between the hours of 8:30 a.m. and 4 p.m. Those wishing to inspect comments are encouraged to call ahead at (703) 605–4646 to facilitate entry into the building.

Comments concerning the information collection requirements contained in this action should reference OMB No. 0596–New, the docket number, date, and page number of this issue of the **Federal Register**. Comments should be sent to the address listed in the above paragraph.

FOR FURTHER INFORMATION CONTACT: Mike Doran, Minerals and Geology Management Staff, (208) 373–4132. Individuals who use telecommunication devices for the deaf (TDD) may call the Federal Information Relay Service (FIRS) at 1–800–877–8339 between 8 a.m. and 8 p.m., Eastern Daylight Time, Monday through Friday.

SUPPLEMENTARY INFORMATION:

Background and Need for Proposed Rule

Locatable mineral operations on National Forest System (NFS) lands have been regulated under the rules now at 36 CFR part 228, subpart A, since 1974. Under these rules, the Forest Service requires operators proposing to conduct such operations to file with the agency a notice of intent, or a plan of operation, or to amend a plan of operation, as appropriate, whenever the

proposed mineral operations might or would likely cause significant disturbance of surface resources.

The regulations at 36 CFR part 228, subpart A, apply to all prospecting, exploration, and mining operations, whether within or outside the boundaries of a mining claim, conducted under the Mining Law of May 10, 1872, as amended. These regulations were originally promulgated in 1974 as 36 CFR part 252, and were based on the Forest Service's authority under the Organic Administration Act of 1897. The rules were redesignated as 36 CFR part 228, subpart A, in 1981. In 2005, a final rule clarifying when a plan of operations is required (§ 228.4(a)) also was adopted. However, the regulations have not been significantly revised since 1974.

The Forest Service recognizes that prospectors and miners have a statutory right, not a mere privilege, under the Mining Law of May 10, 1872, the Surface Resources Act of 1955, 30 U.S.C. 611–615 (sometimes referred to as the Multiple Use Mining Act of 1955 or as Public Law 167), and the Organic Administration Act of 1897, to go upon certain National Forest System lands for the purposes of locatable mineral exploration, development, and production. The Forest Service may not unreasonably restrict the exercise of that right. Under the revised regulation, Forest Service administrators would at all times apply the test of reasonableness, in that the regulations and their administration cannot extend beyond what is needed to preserve and protect the National Forests from needless surface resource damage. Particular consideration would be given to the economics of operations, the stage of the operations, along with other factors in applying the test of reasonableness.

The regulations at 36 CFR part 228, subpart A, have served the Forest Service fairly well in bonding and otherwise administering exploration, mining, and processing operations on National Forest System lands. However, since 1974, several inefficiencies and problems associated with these regulations have become apparent and field managers are asking that the regulations be revised and updated.

This proposed rule would implement recommendations contained in the 1999 National Research Council (NRC) publication ''Hard Rock Mining on Federal Lands.'' This publication resulted when Congress asked the NRC to assess the adequacy of the regulatory framework for locatable mineral operations on Federal lands. In September 1999, the NRC published its conclusions and recommendations. Although the report concluded that the overall regulatory structure for locatable mineral operations on Federal lands is effective, the report recommended revision of several aspects of the Forest Service's regulations. Some of the concerns identified by the NRC are the same concerns the Forest Service has about the existing regulations, specifically, revising the regulations to improve the process for modifying and suspending injurious operations and adjusting reclamation bonds. The report also recommended major changes in the way the Forest Service approves exploratory operations causing less than 5 acres of surface resource disturbance. In response to this recommendation, the Forest Service proposes to adopt regulations similar to the Bureau of Land Management's (BLM) regulations governing notice level operations set forth in 43 CFR subpart 3809.

The Forest Service contacted representatives of the mining industry about its effort to revise 36 CFR part 228, subpart A. The Forest Service briefed those representatives as to what the agency then saw as its six main concerns with its current locatable mineral operations. These were:

(a) New provisions that essentially formalize the current process for, reviewing and approving proposed plans of operations;

(b) Streamlining the process for approving short-term, low impact operations;

(c) New provisions that improve the process and criteria for modification of an approved plan of operations;

(d) Providing additional detail with respect to the process the Forest Service uses to inspect operations and to remedy the operator's or the operations' noncompliance with applicable requirements;

(e) A new provision that explains the Forest Service's and the operator's responsibilities under the Clean Water Act in connection with the review and approval of proposed plans of operations; and

(f) Providing additional detail with respect to the process the Forest Service uses to review and adjust reclamation bonds to ensure that those bonds cover the full cost of reclaiming National Forest System lands.

Description of Substantive Proposed Changes by Section

PART 223—SALE AND DISPOSAL OF NATIONAL FOREST SYSTEM TIMBER

Section 223.14 Where Timber May Be Cut

Section 223.14(d) would be amended to add a citation to 36 CFR part 228, subpart A, to permit certain cutting of timber on a mining claim pursuant to a bonded notice as well as a plan of operations, and to otherwise reflect 36 CFR part 228, subpart A, as it would be revised by this proposed rule.

PART 228—MINERALS

Subpart A—Locatable Minerals

Section 228.3 Definitions

Eleven new terms would be added to the definitions section. Definitions of the terms ''occupancy,'' ''permanent structure'', and ''residence'' would be set forth in § 228.3 to provide consistent interpretations for the public and for Forest Service personnel. These definitions would help reduce confusion about the propriety of proposed occupancy and residence on National Forest System lands in connection with locatable mineral operations, part of which has resulted from imprecise language in some Federal court decisions concerning such occupancy and residence. The three new definitions also would make the Forest Service regulations more consistent with the BLM Occupancy and Use regulations for Locatable minerals, 43 CFR subpart 3715. In addition, these definitions would be consistent with amendments to 36 CFR part 261, subpart A, proposed by this proposed rule.

The term ''reasonably incident'' would be defined to clarify that, by law, mineral operators are restricted to using only reasonable methods of surface disturbance that are appropriate to their stage of operations regardless of the validity of any mining claim on which the operations take place. This clarification is warranted by case law (such as *United States* v. *Richardson*, 599 F. 2d 290 (1979); cert. denied, 444 U.S. 1014 (1980)) and the Surface Resources Act of 1955 (30 U.S.C. 612). Reasonable and necessary uses of the National Forest System lands must employ sound and accepted practices to avoid or minimize adverse environmental impacts. These uses also must employ sound, accepted operational methods appropriate for the applicable stage of mining operations, including prospecting, exploration, production (mining and processing), or

reclamation. The Forest Service General Technical Report INT–35, *Anatomy of a Mine, from Prospect to Production* (section 10–7), describes and gives examples of the reasonable stages of a mining operation.

The proposed term ''reclamation'' would be redefined to include seasonal and interim measures and long-term treatment after mineral operations have ceased.

The term ''reclamation bond'' would be included to clarify that interest earning escrow accounts may be used to cover the costs of long-term reclamation measures.

The term ''significant disturbance of surface resources'' would be defined at § 228.3(n) of the proposed rule to provide general criteria for evaluating the significance of the disturbance of surface resources. However, as discussed in a portion of the June 6, 2005, **Federal Register** notice for the final rule amending 36 CFR 228.4(a) (70 FR 32713) quoted below, it is impossible to define this term definitively given the variability of National Forest System lands.

''Questions and Answers developed by the Forest Service when the 1974 rule was originally adopted explained that a definition cannot be given that would apply to all lands subject to these regulations. Disturbance by a particular type of operation on flat ground covered by sagebrush, for example, might not be considered significant. But that same sort of operation in a high alpine meadow or near a stream could cause highly significant surface resource disturbance. The determination of what is significant thus depends on a case-by-case evaluation of proposed operations and the kinds of lands and other surface resources involved. In general, operations using mechanized earthmoving equipment would be expected to cause significant disturbance. Pick and shovel operations normally would not. Nor would explosives used underground, unless caving to the surface could be expected. Use of explosives on the surface would generally be considered to cause significant disturbance. Almost without exception, road and trail construction and tree clearing operations would cause significant surface disturbance. The Department continues to believe that a universal definition of the term 'significant disturbance' cannot be established for NFS lands. The lands within the NFS subject to the United States mining laws stretch from Alaska on the north, the Mississippi River on the east, the border with Mexico on the south, and the Pacific Ocean on the west. NFS lands within that large area occur in widely diverse climates, hydrogeologic conditions, landforms, and vegetative types. Due to the great variability of NFS ecosystems, identical operations could cause significant disturbance in one situation and insignificant disturbance in another.

However, the record for the 1974 rulemaking at 36 CFR part 228, subpart A, does identify tests that are of use in deciding whether proposed disturbance of NFS resources constitutes 'significant disturbance' for purposes of that rule. A March 28, 1974, letter from Forest Service Chief John McGuire to Senator Ted Stevens in response to Senator Stevens' comments on the rule proposed in 1973 explains that 'significant disturbance' refers to operations 'for which reclamation upon completion of [that operation] could reasonably be required,' and to operations that could cause impacts on NFS resources that reasonably can be prevented or mitigated.''

Nonetheless, locatable mineral operations that fall within the criteria set forth in proposed § 228.3(n) would be judged as likely to cause a significant disturbance of surface resources absent unusual circumstances. It also should be understood that an operation not meeting these criteria might nonetheless be likely to cause ''significant disturbance of surface resources'' given the nature of the lands and surface resources that would be affected by proposed operations. Thus, even when proposed operations would not be judged as likely to cause significant disturbance of surface resources under the general criteria set forth in § 228.3(n), individualized evaluation of proposed operations might reveal that those operations indeed would be likely to cause ''significant disturbance of surface resources.''

The **Federal Register** notice for the final rule amending 36 CFR § 228.4(a) further notes that the March 28, 1974, letter from Forest Service Chief John McGuire ''also emphatically makes the point that the Forest Service's locatable mineral regulations do not use the term 'significant' in the same manner as that term is used in the National Environmental Policy Act.'' It continues to be necessary to distinguish between ''significant'' disturbance of National Forest System surface resources and ''significant'' effects on the quality of the human environment. The Forest Service does not interpret a determination that locatable mineral operations are likely to cause significant disturbance of surface resources as an automatic invocation of Section 102(2)(C) of the National Environmental Policy Act of 1969, thus requiring preparation of an environmental impact statement (or an environmental assessment). This was never intended when what is now 36 CFR part 228, subpart A, was originally promulgated nor is it intended now.

As the **Federal Register** notice for the final rule amending 36 CFR 228.4(a) additionally observed, ''Judicial decisions rendered in the 30 years since the rule at 36 CFR part 228, subpart A was promulgated also give context to the meaning of the term 'significant disturbance [of surface resources].' For example, it is well established that the construction or maintenance of structures, such as cabins, mill buildings, showers, tool sheds, and outhouses on NFS lands, constitutes a significant disturbance of NFS resources. *United States* v. *Brunskill*, 792 F.2d 938, 941 (9th Cir. 1986); *United States* v. *Burnett*, 750 F. Supp. 1029, 1035 (D. Idaho 1990).'' These decisions demonstrate the erroneousness of equating a ''significant'' disturbance of National Forest System surface resources and a ''significant'' effect on the quality of the human environment. It is extremely unlikely that the maintenance, or even the construction, of such structures standing alone would require preparation of either an environmental impact statement or an environmental assessment unless the National Forest System lands at issue possess some noteworthy status such as being part of a proclaimed wilderness or the designated habitat for a threatened or an endangered species.

Of course, some operations that would be likely to cause significant disturbance of National Forest System surface resources also would be likely to cause significant effects on the quality of the human environment. Thus, some few, by no means all, proposed operations would be expected to require preparation of environmental impact statements. More frequently, but not uniformly or even regularly, proposed operations that would be likely to cause significant disturbance of National Forest System surface resources would trigger preparation of an environmental assessment, which might or might not be the basis for a Finding of No Significant Impact. (Whenever an environmental assessment or environmental impact statement would be required, it would be prepared by the Forest Service.)

The Forest Service requests comments on the adequacy of the proposed definition of ''significant disturbance of surface resources'' and its discussion set forth above in drawing the distinction between significant disturbance of

National Forest System surface resources and significant effects on the quality of the human environment.

The proposed term ''surface use determination'' describes a management tool currently used by the authorized officer to determine if a proposed or ongoing use is reasonably incident. The inquiry would consist of an examination and a report completed by a certified mineral examiner that would provide information, conclusions and recommendations to the authorized officer regarding whether a proposed or existing use is logically sequenced, reasonably incident, and otherwise consistent with existing laws and regulations.

This proposed rule defines the term ''United States mining laws'' as the Mining Law of May 10, 1872, as amended and supplemented. This definition reflects the fact that the 1872 Act has since been affected by many other laws. One such law, the Organic Administration Act of 1897, is specifically mentioned for two reasons. It reapplied the United States mining laws to National Forest System lands following their reservation from the public domain and it provides the Forest Service with authority to promulgate these regulations. Another cited law, the Surface Resources Act of 1955, is specifically mentioned because it confirms requirements implicit in the 1872 Act itself. One such requirement is that operators must use reasonable methods of surface disturbance that are appropriate given the warranted stage of locatable mineral operations.

Section 228.4 Submission of Notices of Intent To Operate, Bonded Notices, and Plans of Operation

This section would be sequentially reorganized to first address operations that would cause little or no disturbance of surface resources, then operations that might cause significant disturbance of surface resources, and finally operations that are likely to cause significant disturbance of surface resources.

An operator would not be required to contact the Forest Service before beginning operations that would cause little or no disturbance of surface resources.

An operator would be required to submit a notice of intent to operate before beginning operations that might cause significant disturbance of surface resources. Among the operations that would require a notice of intent to operate are those that would involve occupancy of National Forest System lands lasting longer than the local forest stay limit and those involving motorized use of closed roads. Submission of a notice of intent for occupancy exceeding the local forest stay limit would be required because such occupancy along with the related mining operations might cause significant disturbance of surface resources. Submission of a notice of intent for motorized use of closed roads similarly would be required because such use along with the related mining operations might cause significant disturbance of surface resources. The notice of intent to operate also would provide an efficient means of evaluating, and when reasonably necessary, regulating occupancy that would exceed local forest stay limits and motorized use of closed roads.

An operator would be required to have either a complete bonded notice then in effect or an approved plan of operations then in effect before beginning operations likely to cause significant disturbance of surface resources. The criteria for deciding which of these instruments the operator would be required to have would be based upon the duration and the extent of the likely significant disturbance of surface resources. The subset of proposed operations likely to cause significant disturbance of surface resources which the rule addresses by means of a complete bonded notice, rather than an approved plan of operations, are those that would neither so disturb more than 5 acres at any point in time nor last more than 2 years. This proposed rule requires an operator to have an approved plan of operations before beginning other operations likely to cause significant disturbance of surface resources which do not satisfy both of these criteria.

The new bonded notice category of operations that this proposed rule creates is similar to the BLM's ''notice'' category of operations. However, the bonded notice category of operations would differ in one respect from the BLM's notice category of operations. The BLM restricts use of a notice to exploratory operations. The Forest Service proposes to allow use of a bonded notice for all short-term, low impact operations. As the rule is proposed, it is conceivable that some small mining operations would actually progress to the removal of the valuable locatable mineral deposit and the completion of reclamation under the terms of one or more bonded notices.

Section 228.5 Bonded Notice—Completeness Review

The proposed rule would provide that upon receipt of a bonded notice, the authorized officer, who usually would be the District Ranger, would perform a completeness review to determine whether the proposed operations satisfy the environmental protection requirements in § 228.9, assuming that the proposed operations do not require an approved plan of operations, and respond to the operator within 15 days.

The proposed rule generally provides that when a proposed bonded notice is found to be complete and to meet the requirements of § 228.9, the District Ranger would inform the operator that the notice would take effect upon receipt of an adequate reclamation bond. However, § 228.5(a)(5) of the proposed rule would provide that in cases where an operator has established a pattern of noncompliance with requirements applicable to past or ongoing operations, the operator may be required to have an approved plan of operations rather than a complete bonded notice. A process, which would require the authorized officer to seek the operator's input, would be established by the proposed rule to decide whether it would be appropriate to require the operator to obtain an approved plan of operations. The Forest Service specifically requests comment on the inclusion and formulation of § 228.5(a)(5) in the final rulemaking.

Under the proposed rule, once a bonded notice takes effect, the operator would be able to begin the proposed operations.

The proposed rule provides that when the authorized officer determines that operations being conducted in accordance with a complete bonded notice are resulting in significant disturbance of surface resources not fully described by that notice, the operator would be required to obtain a new complete bonded notice or an approved plan of operations, whichever would be appropriate.

Adopting the new bonded notice category of operations would meet recommendations contained in the NRC's 1999 report ''Hard Rock Mining on Federal Lands.'' One of these recommendations is that: ''Forest Service regulations should allow exploration disturbing less than 5 acres to be approved or denied expeditiously, similar to notice-level exploration activities on BLM lands.'' (pg. 97). Another of these recommendations is that: ''The BLM and the Forest Service should plan for and implement a more timely permitting process, while still protecting the environment.'' (pg. 122).

Currently, an approved plan of operations is required for operations that would be subject to a bonded notice under the proposed rule. The existing approval process for a plan of

operations often takes several months to two years. Adopting the bonded notice category of operations would shorten the Forest Service's review of identical low impact, short-term operations freeing up specialists needed to process more complex proposed plans of operations and to administer locatable mineral operations on the ground.

While the bonded notice category of operations would streamline the permitting process for less impactive short-term, operations, the proposed rule also ensures that any adverse impacts that operations conducted under a bonded notice might have on National Forest System lands would be minimized. All operations that would be conducted under a bonded notice would have to meet the environmental protection requirements set forth in § 228.9. All operations that would be conducted under a bonded notice also would have to be properly bonded.

Section 228.6 Plan of Operations—Approval

The procedures for the Forest Service's review of and response to a proposed plan of operations would be very similar to those that would be applicable to a proposed bonded notice.

Section 228.6(h) would include substantially different standards for requiring modification of a plan of operations than those set forth in the current rule. These changes are necessary because the provisions of the current rule governing modification of an approved plan of operations have been interpreted inconsistently. Questions have also been raised as to when incidental changes of operations authorized by the Forest Service rise to the level of requiring modification of the approved plan of operations. The current rule also contains limited and often ineffective criteria for requiring modification of an approved plan of operations. The NRC recognized the existence of such problems and recommended that: ''The BLM and the Forest Service should revise their regulations to provide more effective criteria for modifications to plans of operation, where necessary, to protect the federal lands.'' (pg. 99). The proposed rule would address the NRC's recommendation by correcting these shortcomings.

Currently, 36 CFR part 228, subpart A, contains criteria for requiring modification of a plan of operations that look backward to focus on what should have been ''foreseen'' when the plan of operations was approved. In this proposed rule, the criteria for requiring modification of a plan of operations allows for a correction of problems manifested after the approval of the plan of operations and would keep approved operations abreast of changed circumstances. These criteria would draw upon those adopted by the Forest Service almost a decade ago in regulations governing locatable mineral operations within the Smith River National Recreation Area, 36 CFR part 292, subpart G. Under the proposed rule, modification of an approved plan of operations might be required to reflect advances in predictive capability, technical capacity, and mining technology. Modification of an approved plan of operations also might be required to address uses of National Forest System land that are no longer, or have become, reasonably incident.

The proposed rule also would reflect the Forest Service's conclusion that it is not reasonable for an operator to continue to conduct any aspect of locatable mineral operations that is causing irreparable or unnecessary injury, loss or damage to National Forest System surface resources even if that aspect of the operations was previously approved by the authorized officer. Thus, the proposed rule would allow the authorized officer to require an operator to suspend any aspect of operations that is causing such injury, loss or damage while the process of modifying the approved plan of operations is ongoing.

Section 228.6(i) would note the Clean Water Act (CWA) obligations that an operator or the Forest Service itself must meet in connection with the approval of a plan of operations. In 2006, a Federal District Court held that the Forest Service cannot approve a proposed plan of operations that may result in a discharge to navigable waters until the operator has obtained a proper 401 CWA certification and presented it to the authorized officer unless the certification requirement has been properly waived. The proposed rule would alert operators and authorized officers to the applicability of this requirement. (The Forest Service Manual has also been amended to include direction for complying with the CWA (FSM 2817.23a)).

Section 228.8 Inspecting Operations and Remedying Noncompliance

The Forest Service has experienced some difficulty in enforcing compliance with the current regulations. A consistent and clearly understood response to noncompliance is needed. The NRC report stated: ''* * * the committee is persuaded that more consistent and accessible procedures for deciding when to refer apparent violations to other agencies and the ability to issue reasonable administrative penalties, subject to the appropriate due process, would improve the efficiency of agency operations and enhance the protection of then environment.'' (pgs.102–103).

This section would list enforcement steps the authorized officer can take if the operator fails to comply with a notice of noncompliance. This proposed rule notes, as is true today, that the authorized officer may initiate a civil action, issue a Violation Notice under 36 CFR part 261, or use the reclamation bond to take all necessary measures to protect the environment specified by the notice of noncompliance.

Section 228.9 Environmental Protection Requirements

This proposed rule would update and revise the environmental protection requirements applicable to locatable mineral operations. A new paragraph, § 228.9(e), would reference the requirements of the Endangered Species Act (ESA). This change would be made because some people have asserted that the ESA does not apply to locatable mineral operations given that the ESA is not mentioned in the currently applicable requirements for environmental protection.

Some operators also do not understand that the Forest Service may require bond coverage that includes the cost of removing any abandoned equipment or other property from National Forest System lands. Some have argued that since the current regulations do not specifically state that removal of equipment is part of reclamation, the operator cannot be required to post a bond for the removal of that equipment. As in the current rule, a separate section of this proposed rule (§ 228.11) would require removal of structures and equipment upon the cessation of operations. However, to prevent further confusion, a new paragraph, § 228.9(i), would be included in the proposed rule to make it clear that a required element of reclamation is the removal of structures and equipment from National Forest System lands. Section 228.13(c)(1), would govern reclamation bonding and also would specify that the cost of complying with proposed § 228.9(i) would be factored into a reclamation bond's required coverage.

This section also would be revised to make the environmental protection requirements applicable to bonded notices as well as plans of operations.

Section 228.10 Reasonably Incident Uses

This new section would allow an authorized officer to require an operator to cease uses of National Forest System lands that are not reasonably incident to locatable mineral prospecting, exploration, development, mining, processing, or reclamation. This proposed rule would establish a process for evaluating the reasonableness of operations or incidental uses, and to initiate a surface use determination.

Uses such as occupancy and in particular, residence, would be evaluated under this section to determine whether those uses are necessary based on the nature or stage of ongoing or proposed operations. These proposed requirements and requirements proposed elsewhere in this proposed rule are modeled upon the BLM's parallel rule (43 CFR subpart 3715) governing occupancy and reasonably incident uses and operations on the public lands.

Section 228.11 Cessation of Operations

This section would be revised to give the authorized officer a clearly stated process and criteria to use when responding to a proposed or actual cessation or temporary closure of operations. The Forest Service has noticed inappropriate characterizations of closures or cessations of operations as ''temporary.'' These characterizations sometimes appear to be attempts to delay or avoid taking appropriate interim or final actions to clean up and otherwise close and reclaim completed or abandoned operations. These changes would address any such abuse.

Section 228.12 Access for Operations

This section would be revised to clarify that all access must be reasonable. A clarification also would be added stating that the Forest Service may elect to regulate access on National Forest System lands for associated work on lands patented under the United States mining laws pursuant to 36 CFR part 228, subpart A. The vehicle for regulating such access would be either a complete bonded notice or an approved plan of operations.

Section 228.13 Reclamation Bonds for Bonded Notices and Plans of Operation

The revisions in this section would clearly identify the different types of financial instruments that can be used as a reclamation bond. This proposed rule would retain the use of statewide or nationwide blanket bonds while including a new mechanism to insure the adequacy of any blanket bond.

The current regulations do not contain an appropriately detailed process for the administration of reclamation bonds, which results in inconsistent administration of such bonds. As it would be revised, this section would lay out a clear process and definitive standards for administering reclamation bonds. This would facilitate consistent administration of reclamation bonds by Forest Service authorized officers.

Questions have been raised as to whether the authorized officer has authority to require periodic reviews of reclamation bonds, and to require appropriate adjustments of reclamation bonds based upon those reviews. To forestall such questions in the future, the proposed rule would be expanded to set forth detailed language providing criteria and a process for the authorized officer's review of reclamation bonds. The proposed rule would permit review of a reclamation bond's adequacy whenever the authorized officer believes it is necessary. However, the proposed rule would require the authorized officer to seek input from the operator before requiring any adjustment of the bond.

The proposed rule would provide that value should not be attributed to any property that an operator places or creates on National Forest System lands for purposes of determining the cost to fully reclaim such lands in accordance with § 228.13(c). Any other approach would not be reasonable. The operator not only is entitled, but would be required, to remove such property in accordance with § 228.9(i) of the proposed rule. The value of any property impermissibly abandoned on the area of operations also could not be determined in advance. An operator might not own property placed or constructed on National Forest System lands. Even if the operator owned such property initially, ownership of it could pass to another person during the course of the operations voluntarily by sale or involuntarily by bankruptcy. When operations are lengthy, property that was initially valuable may be worth less than the cost to remove it when the operations cease or are concluded. Liability could also be associated with any such abandoned property that the United States would not accept.

This proposed rule would require mandatory bonding for all bonded notices as well as all newly approved plans of operation.

Under current practice, few, if any, operations requiring an approved plan of operations are authorized today without reclamation bond coverage given serious problems that have arisen with respect to previously approved operations for which a bond was not required. However, approved plans of operations are in effect for which a reclamation bond was not required. This proposed rule would require an operator to furnish a bond complying with the requirements of the proposed rule for all existing operations subject to an approved plan of operations, including those for which a reclamation bond initially was not required. Operators would be given 180 days after the effective date of the final rule to furnish such a bond. The BLM also required bonds for existing operations subject to an approved plan of operations to be brought into compliance with the bonding requirements of its revised 43 CFR subpart 3809 regulations within 180 days of that rule's effective date.

As it would be revised, this proposed rule would provide for use of escrow accounts to cover long-term monitoring, maintenance, or treatment measures to prevent or otherwise minimize on-site or off-site damage. The BLM has successfully used this kind of financial instrument to bond such obligations as long-term water treatment (see 43 CFR 3809.556).

This proposed rule also would be expanded to set forth specific criteria and a formal process that the authorized officer must use in deciding whether to permit the release of a reclamation bond or to require the replacement or forfeiture of a reclamation bond. The authorized officer also would be obligated to seek the operator's input before requiring the replacement or forfeiture of a reclamation bond.

Section 228.14 Operations on Withdrawn or Segregated National Forest System Lands Including National Forest Wilderness

The provisions in the current rule governing operations in National Forest Wilderness are reorganized for clarity. Another clarification is made concerning information gathering about any type of mineral as authorized by the Wilderness Act on lands which that Act has withdrawn from appropriation under the United States mining laws. Although the United States mining laws do not govern such information gathering, this proposed rule would make the procedures set forth in this subpart applicable to that work given the similar methods by which such information is gathered.

Proposed paragraphs (f) through (i) of this section would establish the requirements for conducting locatable mineral operations on all National Forest System lands segregated or withdrawn from the operation of the

United States mining laws. National Forest System lands are withdrawn or segregated pursuant to many authorities and there is no logical reason to distinguish between lands segregated or withdrawn from appropriation under one versus another authority.

These proposed provisions specify that operations generally are allowable on all National Forest System lands segregated or withdrawn from the mining laws only to the extent that a person has valid existing rights to proceed, regardless of whether the operations may proceed under a complete bonded notice or an approved plan of operations. Thus, the proposed rule allows the Forest Service to protect genuine valid existing rights (by requiring a determination that such rights exist) while at the same time protecting areas that have been withdrawn or are being proposed to be withdrawn from operation of the mining laws. However, these proposed provisions specify that the Forest Service may allow limited activities before the existence of valid existing rights is established or disproven, including certain limited sampling and limited annual assessment work.

Proposed paragraph (f) of this section would require the Forest Service to prepare a mineral examination report before approving a plan of operations for proposed operations on National Forest System lands withdrawn from the operation of the mining laws. Additionally, this section would grant the Forest Service the discretion to prepare a mineral examination report before confirming that a bonded notice is complete or approving a plan of operations for proposed operations on National Forest System lands that have been segregated under section 204 of FLPMA (43 U.S.C. 1714) for consideration of a withdrawal. This section also would provide that when a mineral examination report finds that a mining claim is invalid but the operator declines to alter the proposed operations to avoid the segregated or withdrawn National Forest System lands in question, the Forest Service will request that the BLM promptly initiate contest proceedings to determine the validity of all such mining claims.

However, in specified limited circumstances proposed paragraph (g) would allow the Forest Service to approve a plan of operations before a mineral examination report for a claim located on withdrawn lands has been prepared. Specifically, the Forest Service may allow operations to take samples to confirm or corroborate mineral exposures that were physically disclosed and existing on the mining claim before the segregation or withdrawal date, whichever is earlier; and to perform any minimum necessary annual assessment work under 43 CFR 3851.1. This section also would permit an operator to conduct the same limited operations on segregated lands under either a bonded notice that the Forest Service has confirmed is complete or a plan of operations that the Forest Service has approved.

Proposed paragraph (h) allows the Forest Service to suspend the time limit the agency would take for final action on a proposed plan of operations until the existence of valid existing rights is finally established or disproven pursuant to paragraph (f) of this section, whether by virtue of the mineral examination report, a mineral contest, or federal court proceedings. The section also provides for the suspension of the time limit for the Forest Service to confirm that a proposed bonded is complete under identical terms.

Proposed paragraph (i) requires an operator to cease all operations, except required reclamation, when the absence of valid existing rights is finally established pursuant to paragraph (f) of this section, whether by virtue of the mineral examination report, a mineral contest, or federal court proceedings.

Section 228.16 Applicability of This Subpart

This section would specify how the revised rule would apply to classes of operations such as approved and ongoing operations, preexisting proposed plans of operation, preexisting unapproved modifications of approved plans, and other preexisting operations. This section would directly parallel the applicability of the BLM's revised 43 CFR subpart 3809 regulations to the same classes of ongoing or proposed locatable mineral operations.

PART 261—PROHIBITIONS

Section 261.2 Definitions

The definition of ''operating plans'' set forth in this section would be revised to include bonded notices within its scope. A new definition of ''residence,'' patterned upon the definition of ''residence'' which would be set forth at 36 CFR part 228.3(m), also would be added to this section.

Section 261.10 Occupancy and Use

Paragraphs (a), (b) and (l) of this section would be revised to apply to bonded notices as well as to plans of operation. This change has no substantive effect. These paragraphs presently apply to operations requiring an approved plan of operations. Operations that would be conducted under a complete bonded notice should the proposed rule be adopted, presently require an approved plan of operations under 36 CFR part 228, subpart A. Thus, whether or not the proposed rule is ultimately adopted, the same operations would be subject to these three paragraphs.

New paragraphs (p) and (q) also would be added to this section. Paragraph (p) would prohibit the use or occupancy of National Forest System land or facilities without a complete bonded notice or an approved plan of operations when the operations require such a bonded notice or plan of operations. Paragraph (q) would prohibit the use of National Forest System land as storage sites without a complete bonded notice or an approved plan of operations when the operations would require such a bonded notice or an approved plan of operations.

PART 292—NATIONAL RECREATION AREAS

Subpart D—Sawtooth Natural Recreation Area—Federal Lands

Section 292.17 General Provisions

This section would be amended to add a citation to 36 CFR part 228, subpart A.

Subpart G—Smith River National Recreation Area

Section 292.63 Plan of Operations—Supplementary Requirements

This section would be amended to reflect the revised requirements that would be set forth at proposed 36 CFR part 228.4(f)(1) through (f)(4) and proposed 36 CFR part 228.9. This section also would be revised to employ the same terminology that would be set forth at 36 CFR part 228, subpart A.

PART 293—WILDERNESS—PRIMITIVE AREAS

Section 293.2 Objectives

This section would be amended to add a citation to 36 CFR part 228, subpart A.

Section 293.15 Gathering Information About Resources Other Than Minerals

This section would be amended to add a citation to 36 CFR part 228, subpart A.

Regulatory Certifications

Regulatory Planning and Review

This proposed rule has been reviewed under USDA procedures and Executive Order 12866, amended by Executive Order 13422, Regulatory Planning and

Review. It has been determined that this proposed rule is not significant. This proposed rule will not have an annual effect of $100 million or more on the economy nor adversely affect productivity, competition, jobs, the environment, public health or safety, nor State or local governments. This proposed rule would not interfere with an action taken or planned by another agency nor raise new legal or policy issues. Finally, this action will not alter the budgetary impact of entitlements, grants, user fees, or loan programs or the rights and obligations of recipients of such programs. Accordingly, this proposed rule is not subject to OMB review under Executive Order 12866.

Moreover, this proposed rule has been considered in light of the Executive Order 13272 regarding proper consideration of small entities and the Small Business Regulatory Enforcement Fairness Act of 1996 (SBREFA), which amended the Regulatory Flexibility Act (5 U.S.C. 601 *et seq.*). An initial small entities flexibility assessment has been made and it has been determined that this action will not have a significant economic impact on a substantial number of small entities as defined by SBRFEA. Therefore, a regulatory flexibility analysis is not required.

Environmental Impacts

This proposed rule revises and updates the regulations for locatable mineral operations on the National Forests. Section 31.1b of Forest Service Handbook 1909.15 (57 FR 43168; September 18, 1992) excludes from documentation in an environmental assessment or impact statement ''rules, regulations, or policies to establish servicewide administrative procedures, program processes, or instruction.'' This proposed rule clearly falls within this category of actions and no extraordinary circumstances exist which would require preparation of an environmental assessment or an environmental impact statement. A final determination will be made simultaneously with the adoption of the final rule.

Energy Effects

This proposed rule has been reviewed under Executive Order 13211 of May 18, 2001, Actions Concerning Regulations That Significantly Affect Energy Supply, Distribution, or Use. It has been determined that this proposed rule does not constitute a significant energy action as defined in the Executive order.

Controlling Paperwork Burdens on the Public

In accordance with the Paperwork Reduction Act of 1995 [44 U.S.C. Chapter 35], FS announces its intention to request an approval of a new information collection (and recordkeeping requirements—if applicable). Upon OMB approval, this collection will be merged into 0596–0022.

Title: Proposed Revision of 36 CFR part 228, Subpart A—Locatable Minerals.

OMB Number: 0596–New.

Expiration Date of Approval: 3 years from approval date.

Type of Request: New information collection.

Abstract: The United States General Mining Laws, as amended, govern prospecting for and appropriation of metallic and most nonmetallic minerals on approximately 122 million acres of National Forest set up by proclamation from the public domain. These laws give individuals the right to search for and extract valuable mineral deposits, and secure title to the lands involved. A prospector may locate a mining claim upon the discovery of a valuable mineral deposit. Recording that claim in the local county courthouse and with the appropriate BLM State Office affords protection to the mining claimant from subsequent locators. A mining claimant is entitled to reasonable access to the claim for further prospecting, mining, or necessary related activities, subject to other applicable laws and regulations. Locatable mineral regulations are specific rules and procedures for use of the surface of National Forest System lands, in connection with mineral operations authorized by the United States mining laws, to minimize adverse environmental impacts to surface resources.

The information collection required for: a notice of intent to operate; proposed initial, modified, or supplemental plan of operations; and cessation of operations, is approved and assigned Office of Management and Budget Control (OMB) No. 0596–0022. The information collection required for a proposed bonded notice in this proposed rule has been submitted to OMB as a new collection.

Estimated Number of Respondents: 100.

Estimated Number of Responses per Respondent: 1.

Estimated Number of Total Annual Responses: 100.

Estimated Total Annual Burden on Respondents: 600 hours.

Comments: Comments are invited on: (1) Whether the proposed collection of information is necessary for the proper performance of the functions of the agency, including whether the information will have practical utility; (2) the accuracy of the agency's estimate of the burden of the proposed collection of information, including the validity of the methodology and assumptions used; (3) ways to enhance the quality, utility, and clarity of the information to be collected; and (4) ways to minimize the burden of the collection of information on those who are to respond, including the use of appropriate automated, electronic, mechanical, or other technological collection techniques or other forms of information technology.

Federalism

The agency has considered this proposed rule under the requirements of Executive order 13132, Federalism. The agency has made a preliminary assessment that this proposed rule conforms with the federalism principles set out in this Executive order; would not impose any compliance costs on the States; and would not have substantial direct effects on the States, on the relationship between the national government and the States, or on the distribution of power and responsibilities among the various levels of government. Based on comments received on this proposed rule, the agency will consider if any additional consultations will be needed with the State and local governments prior to adopting a final rule.

Consultation and Coordination With Indian Tribal Governments

This proposed rule does not have tribal implications as defined by Executive Order 13175, Consultation and Coordination with Indian Tribal Governments, and, therefore, advance consultation with tribes is not required.

No Takings Implications

This proposed rule has been analyzed in accordance with the principles and criteria contained in Executive Order 12630, and it has been determined that the proposed rule does not pose the risk of a taking of private property.

Civil Justice Reform

This proposed rule has been reviewed under Executive Order 12988, Civil Justice Reform. The agency has not identified any State or local laws or regulations that are in conflict with this proposed regulation or that would impede full implementation of this proposed rule. Nevertheless, in the event that such a conflict were to be identified, the proposed rule, if implemented, would preempt the State or local laws or regulations found to be in conflict. However, in that case, (1) no retroactive effect would be given to this proposed rule; and (2) the Department

would not require the use of administrative proceedings before parties may file suit in court challenging its provisions.

Unfunded Mandates

Pursuant to title II of the Unfunded Mandates Reform Act of 1995 (2 U.S.C. 1531–1538), which the President signed into law on March 22, 1995, the agency has assessed the effects of this proposed rule on State, local, and tribal governments and the private sector. This proposed rule would not compel the expenditure of $100 million or more by any State, local, or tribal government or anyone in the private sector. Therefore, a statement under section 202 of the act is not be required.

List of Subjects

36 CFR Part 223

Administrative practice and procedure, Exports, Forests and forest products, Government contracts, National Forests, Reporting and recordkeeping requirements.

36 CFR Part 228

Environmental protection, Mines, Miners, National Forests, Natural resources, Oil and gas exploration, Public lands—mineral resources, Public lands-rights-of-way, Reclamation, Reporting and recordkeeping requirements, Surety bonds, Wilderness areas.

36 CFR Part 261

Law enforcement, National Forests.

36 CFR Part 292

Mineral resources, Recreation and recreation areas.

36 CFR Part 293

National Forests, Wilderness areas.

Therefore, for the reasons set forth in the preamble, the United States Department of Agriculture proposes to amend 36 CFR chapter II to read as follows:

PART 223—SALE AND DISPOSAL OF NATIONAL FOREST SYSTEM TIMBER

1. The authority citation for part 223 continues to read as follows:

Authority: 90 Stat. 2958, 16 U.S.C. 472a; 98 Stat. 2213, 16 U.S.C. 618, 104 Stat. 714–726, 16 U.S.C. 620–620j, unless otherwise noted.

2. Revise paragraph (d) of § 223.14 to read as follows:

§ 223.14 Where timber may be cut.

* * * * *

(d) Timber on an unpatented mining claim may be cut by the claimant only for the actual development of the claim or for uses consistent with the purposes for which the claim was entered. Any severance or removal of timber, other than severance or removal to provide clearance, must be in accordance with a complete bonded notice then in effect or an approved plan of operations then in effect as provided by part 228, subpart A of this chapter, and with sound principles of forest management.

* * * * *

PART 228—MINERALS

3. Revise the authority citation for part 228 to read as follows:

Authority: 30 Stat. 35 and 36, as amended (16 U.S.C. 478, 482, 551); 41 Stat. 437, as amended, sec. 5102(d), 101 Stat. 1330–256 (30 U.S.C. 226); 61 Stat. 681, as amended (30 U.S.C. 601); 61 Stat. 914, as amended (30 U.S.C. 352); 69 Stat. 368, as amended (30 U.S.C. 611); and 94 Stat. 2400.

4. Revise Subpart A to read as follows:

Subpart A—Locatable Minerals

Sec.

228.1 Purpose.
228.2 Scope.
228.3 Definitions.
228.4 Submission of notices of intent to operate, bonded notices, and plans of operations.
228.5 Bonded notice—completeness review.
228.6 Plan of operations—approval.
228.7 Availability of information to the public.
228.8 Inspecting operations and remedying noncompliance.
228.9 Environmental protection requirements.
228.10 Reasonably incident uses.
228.11 Cessation of operations.
228.12 Access for operations.
228.13 Reclamation bonds for bonded notices and plans of operation.
228.14 Operations on withdrawn or segregated National Forest System lands including National Forest Wilderness.
228.15 Administrative appeals.
228.16 Applicability of this subpart.

Subpart A—Locatable Minerals

§ 228.1 Purpose.

It is the purpose of the regulations in this subpart to set forth rules and procedures under which use of the surface of National Forest System lands for operations authorized by the United States mining laws must be conducted so as to minimize adverse environmental impacts on National Forest System surface resources. The United States mining laws, which confer a statutory right to enter upon certain Federal lands to search for locatable minerals, apply to National Forest System lands reserved from the public domain pursuant to the Creative Act of 1891, Sec. 24, 26 Stat. 1095, 1103 (1891), by virtue of the Organic Administration Act of 1897, 16 U.S.C. 482. It is not the purpose of the regulations in this subpart to provide for the management of mineral resources; the responsibility for managing such resources is in the Secretary of the Interior.

§ 228.2 Scope.

(a) This subpart applies to operations hereafter conducted on National Forest System lands under the United States mining laws as they affect surface resources on such lands which are under the jurisdiction of the Secretary of Agriculture: *Provided, however,* That any area of National Forest System lands covered by a special act of Congress (16 U.S.C. 482a–482q) is subject to the provisions of this subpart and the provisions of the special act, and in the case of conflict the provisions of the special act will apply.

(b) Certification or other approval issued by State agencies or other Federal agencies of compliance with laws and regulations relating to locatable mining operations the authorized officer determines are similar or parallel to requirements of this subpart will be accepted as compliance with the applicable requirements of this subpart.

§ 228.3 Definitions.

For the purposes of this subpart the following terms, respectively, mean:

(a) *Authorized officer.* The Forest Service officer to whom authority to review and approve a plan of operations has been delegated.

(b) *Day.* For purposes of computing time periods, the term ''day'' refers to Mondays through Fridays, beginning the next one of these days after the event from which the time computation period begins to run. However, when the time computation period ends on a day a Federal holiday appointed by the President or the Congress of the United States is observed, the period is extended to the end of the next day not a Federal holiday.

(c) *Minimize.* Limiting operations conducted to those reasonably incident and, where practical, preventing or reducing the adverse impact of reasonably incident operations.

(d) *Mining claim.* Any unpatented mining claim or unpatented mill site authorized by the United States mining laws.

(e) *Occupancy.* Being present on or employing National Forest System lands for any of the following activities or purposes:

(1) The construction, maintenance, placement, protection, repair, retention or use of a residence as defined by

§ 228.3(m) for any purpose: *Provided, however,* That a temporary structure or a temporary shelter supplying living or sleeping quarters for any person camping in connection with locatable mineral operation is not occupancy unless such camping will exceed any stay limit applicable to the National Forest System lands on which such temporary structure or temporary shelter is situated;

(2) Regular use of any area, whether or not enclosed or covered in any way, for the storage of equipment, machinery, parts, process materials, spent materials, supplies, tools and vehicles;

(3) The construction, maintenance, placement, repair, retention or use of any barrier to access, including but not limited to, enclosures, fences, gates and signs;

(4) Use of a caretaker, guard or watchman to monitor, protect, or safeguard property, objects, workings, facilities, or the public; and

(5) Use of a means of transportation on a road or another access facility the Forest Service has closed to such use.

(f) *Operations.* All functions, work, and activities in connection with prospecting, exploration, development, mining or processing of locatable mineral resources, reclamation and closure, and all uses reasonably incident thereto, including roads, other means of access and occupancy, on National Forest System lands subject to the regulations in this subpart, regardless of whether said operations take place within or outside the boundaries of a mining claim.

(g) *Operator.* A person conducting or proposing to conduct operations.

(h) *Permanent structure.* Structures fixed to the ground by any of the various types of foundations, slabs, piers, poles, and other means and structures placed on the ground that can only be moved through disassembly of the structure into its component parts or by techniques commonly used in moving houses. Tents and lean-tos are temporary, not permanent, structures.

(i) *Person.* Any individual, partnership, corporation, association, or other legal entity.

(j) *Reasonably incident.* A shorthand reference to the statutory standard ''prospecting, mining or processing operations and uses reasonably incident thereto'' (30 U.S.C. 612(a)).

(1) Reasonably incident includes those actions or expenditures of labor and resources by a person of ordinary prudence to prospect, explore, define, develop, mine, or beneficiate a valuable locatable mineral deposit, and reclamation of lands affected by such actions or expenditures of labor, using work, activities, functions, practices, facilities, structures, and equipment appropriate to the geological terrain, mineral deposit, and stage of development and reasonably related activities.

(2) Uses not reasonably incident include, but are not limited to, all uses not: Allowed pursuant to the United States mining laws or other applicable laws; necessary or reasonable on National Forest System lands; realistically calculated to lead to the extraction and beneficiation of valuable locatable minerals; required for the applicable stage of prospecting, exploration, development, mining or processing operations; warranted given the extent of available information on the mineral deposit; or warranted given the extent, or lack, of ongoing operations.

(k) *Reclamation.* Measures taken to, where practical, prevent or otherwise minimize onsite and off-site damage to the environment and National Forest System surface resources. It includes concurrent, seasonal, interim, and ultimate actions, including, if necessary, monitoring, maintenance and long-term treatment after mineral operations have ceased. These measures must shape, stabilize, revegetate, or otherwise treat lands affected by operations in order to achieve a safe and environmentally stable condition.

(l) *Reclamation bond.* Surety bonds, cash, negotiable securities of the United States, or escrow accounts posted by an operator to cover the full cost of reclaiming National Forest System lands affected by operations conducted subject to a complete bonded notice or an approved plan of operations.

(m) *Residence.* Any structure or shelter, whether temporary or permanent, including, but not limited to, buildings, buses, cabins, campers, houses, lean-tos, mills, mobile homes, motor homes, pole barns, recreational vehicles, sheds, shops, tents and trailers, which is being used, capable of being used, or designed to be used, in whole or in part, full or part-time, as living or sleeping quarters by any person, including a guard or watchman.

(n) *Significant disturbance of surface resources.* Disturbance of National Forest System surface resources requiring the use of reclamation measures in order to return National Forest System lands and surface resources affected by operations to a safe and environmentally stable condition or influencing materially the administration of National Forest System lands or surface resources affected by operations during their pendency. Significant disturbance of surface resources generally results from operations employing mechanized earth-moving equipment, truck-mounted drilling equipment, explosives or chemicals; requiring access road construction or reconstruction; requiring construction of buildings, impoundments and other support facilities; occurring within areas of National Forest System lands or waters known to contain Federally listed threatened or endangered species or their designated critical habitats; or occurring within areas of National Forest System lands withdrawn from the operation of the United States mining laws. Significant disturbance of surface resources also generally occurs when operations cause fire, health or safety hazards on National Forest System lands; preclude or restrict other uses of National Forest System surface resources; prevent or obstruct free passage or transit over National Forest System lands; involve residency, other than permitted camping, on National Forest System lands; injure or destroy any scientifically important paleontologic remains or any historical or archaeological structure, resource, or object; or necessitate closing National Forest System lands or facilities to users other than an operator or exempting an operator from closure of National Forest System lands or facilities to other users. An operation that will cause significant disturbance of National Forest System surface resources occasionally may, but often will not, significantly affect the quality of the human environment for purposes of the National Environmental Policy Act of 1969 (42 U.S.C. 4332(2)(C) and its implementing regulations (40 CFR parts 1500–1508).

(o) *Surface use determination.* An inquiry conducted by a certified Forest Service Mineral Examiner as to whether specified uses of National Forest System lands are reasonably incident.

(p) *United States mining laws.* A reference to the Mining Law of May 10, 1872 (30 U.S.C. 21–54), as amended and supplemented by laws including the Organic Administration Act of 1897 (16 U.S.C. 478, 482 & 551) and the Surface Resources Act of 1955 (30 U.S.C. 611–614).

§ 228.4 Submission of notices of intent to operate, bonded notices, and plans of operations.

(a) *Operations not requiring prior notice.* (1) Except as provided by paragraphs (a)(2) through (a)(4) of this section, an operator is not required to give notice to the Forest Service before:

(i) Beginning operations that will be limited to the use of vehicles on existing public roads or roads used and

maintained for National Forest System purposes;

(ii) Beginning prospecting and sampling that will not cause significant disturbance of National Forest System surface resources and will not involve removal of more than a reasonable amount of a mineral deposit for analysis and study which generally might include searching for and occasionally removing small mineral samples or specimens, gold panning, metal detecting, non-motorized hand sluicing, using battery operated dry washers, and collecting mineral specimens using hand tools;

(iii) Marking and monumenting a mining claim;

(iv) Beginning underground operations that will not cause significant disturbance of National Forest System surface resources;

(v) Beginning operations, which in their totality, will not cause disturbance of National Forest System surface resources substantially different than that caused by other National Forest System users who are not required to obtain a special use authorization, contract, or other written authorization from the Forest Service before beginning such use; or

(vi) Beginning operations that will not involve the use of mechanized earth-moving equipment, such as bulldozers or backhoes, or the cutting of trees, unless those operations otherwise might cause significant disturbance of National Forest System surface resources.

(2) Operations involving occupancy of National Forest System lands, as defined by § 228.3(e), are not subject to paragraph (a)(1) of this section.

(i) The construction, maintenance, placement, protection, repair, retention or use of a temporary structure or a temporary shelter supplying living or sleeping quarters for any person camping in connection with locatable mineral operation is not occupancy providing that such camping will not exceed any stay limit applicable to the National Forest System lands on which the temporary structure or temporary shelter is situated. Accordingly, prior notice is not required for an operation involving camping which otherwise meets the requirements of paragraphs (a)(1)(i) through (a)(1)(vi) of this section unless the operation is subject to any of paragraphs (a)(2)(ii) through (a)(4) of this section.

(ii) An operator proposing to construct, maintain, place, protect, repair, retain or use a permanent structure located on National Forest System lands must submit a proposed plan of operations pursuant to paragraph (d)(1)(ii)(A) of this section.

(iii) Otherwise, an operator proposing to conduct operations involving occupancy of National Forest System lands, including use of a means of transportation on a road or another access facility the Forest Service has closed to such use, must submit of a notice of intent to operate in complaince with paragraphs (b)(3) through (b)(6) of this section.

(3) An operator proposing to conduct any operation subject to paragraph (c)(1)(ii) of this section shall submit a proposed bonded notice in compliance with paragraph (c)(3) through (c)(5) of this section.

(4) An operator proposing to conduct any operation subject to paragraphs (d)(1)(ii)(B) through (d)(1)(ii)(E) of this section shall submit a proposed plan of operations in compliance with paragraphs (d)(2) through (d)(4) of this section.

(b) *Operations requiring a notice of intent to operate.* (1) Except as provided by paragraph (b)(2) of this section, an operator must submit a notice of intent to operate when the operator proposes to conduct operations that:

(i) Might cause significant disturbance of National Forest System surface resources; or

(ii) Would involve occupancy of National Forest System lands as defined by § 228.3(e), including, but not limited to:

(A) Use of a means of transportation on a road or another access facility the Forest Service has closed to such use; and

(B) Construction, maintenance, placement, protection, repair, retention or use of a residence as defined by § 228.3(m) unless:

(*1*) The residence is a permanent structure as defined by § 228.3(h) for which the operator must submit a proposed plan of operations pursuant to paragraph (d)(1)(ii)(A) of this section; or

(*2*) The residence is a temporary structure or a temporary shelter supplying living or sleeping quarters for any person camping in connection with locatable mineral operation providing that such camping will not exceed any stay limit applicable to the National Forest System lands on which the temporary structure or temporary shelter is situated. Accordingly, a notice of intent is not required for an operation involving such residence which meets the requirements of paragraphs (a)(1)(i) through (a)(1)(vi) of this section unless the operation is subject to paragraphs (a)(2)(ii) through (a)(4) of this section.

(2) An operator is not required to submit a notice of intent to operate if:

(i) The operations may proceed without prior notice pursuant to paragraph (a) of this section.

(ii) The operator elects to submit a proposed bonded notice or a proposed plan of operations instead of a notice of intent to operate;

(iii) The proposed operations are not likely to cause significant disturbance of National Forest System surface resources;

(iv) The operator is required to submit a proposed bonded notice because the proposed operations are subject to paragraph (c)(1)(ii) of this section; or

(v) The operator is required to submit a proposed plan of operations because the proposed operations are subject to paragraph (d)(1)(ii) of this section.

(3) A notice of intent to operate must provide information sufficient to identify the proposed area of operations, the nature of the proposed operations, and the proposed mode of transportation and route of access to the area of operations.

(4) The operator must transmit the notice of intent to operate to the District Ranger having jurisdiction over the area within which the proposed operations will be conducted.

(5) The operator must not begin the operations described by the notice of intent to operate sooner than 15 days after the notice was received by the District Ranger except as provided by paragraphs (b)(6)(i) and (b)(6)(ii) of this section.

(6) Within 15 days of receiving a notice of intent to operate, the District Ranger will notify the operator if the proposed operations cannot begin until—

(i) The operator has submitted a proposed bonded notice pursuant to paragraph (c) of this section and the requirements of § 228.5 are satisfied; or

(ii) The operator has submitted a proposed plan of operations pursuant to paragraph (d) of this section and the requirements of § 228.6 are satisfied.

(c) *Operations requiring a proposed bonded notice.* (1) Except as provided by paragraph (c)(2) of this section, an operator must submit a proposed bonded notice when the operator proposes to conduct operations that:

(i) Will likely cause significant disturbance of National Forest System surface resources providing that such disturbance will last no longer than two years and will occur on no more than 5 acres of unreclaimed National Forest System lands at any point in time; or

(ii) Will occur partially or wholly on national Forest System lands segregated from appropriation under the United States mining laws providing that the disturbance of National Forest System

surface resources the operations will likely cause will last no longer than two years and will occur on no more than 5 acres of unreclaimed National Forest System lands at any point in time.

(2) An operator is not required to submit a proposed bonded notice if:

(i) The operations may proceed without prior notice pursuant to paragraph (a) of this section.

(ii) The operations may proceed under a notice of intent to operate pursuant to paragraph (b) of this section.

(iii) The operator elects to submit a proposed plan of operations instead of a proposed bonded notice; or

(iv) The operator is required to submit a proposed plan of operations because the operations are subject to paragraph (d)(1)(ii) of this section.

(3) A proposed bonded notice must contain the information specified by paragraph (f) of this section as foreseen for the entire operation for the full estimated period of activity.

(4) The operator must transmit the proposed bonded notice to the District Ranger having jurisdiction over the lands on which the proposed operations would be conducted.

(5) The operator must not begin the operations described by the proposed bonded notice before the bonded notice has been determined to be complete pursuant to § 228.5(b)(1) and the requirements of § 228.5 are otherwise satisfied.

(d) *Operations requiring a proposed plan of operations.* (1) An operator must submit a proposed plan of operations when the operator proposes to conduct operations that:

(i) Will likely cause significant disturbance of National Forest System surface resources lasting no longer than two years or occurring on more than 5 acres of unreclaimed National Forest System lands at any point in time; or

(ii) Always require an approved plan of operations because those operations:

(A) Will involve the construction, maintenance, placement, protection, repair, retention or use of a permanent structure on National Forest System lands;

(B) Will occur partially or wholly on National Forest System lands withdrawn from appropriation under the United States mining laws, including lands within National Forest Wilderness;

(C) Will occur partially or wholly on National Forest System lands segregateed or withdrawn from appropriation under the United States mining laws, if the disturbance of National Forest System surface resources that the operation will likely cause will last longer than two years or will occur on more than 5 acres of unreclaimed National Forest System lands at any point in time;

(D) Will sever or remove timber on National Forest System lands for purposes other than providing clearance; or

(E) Are subject to § 228.5(a)(5)(iii)(B).

(2) A proposed plan of operations must contain the information specified by paragraph (f) of this section as foreseen for the entire operation for the full estimated period of activity.

(i) If the development of a plan of operations for an entire operation is not possible when the proposed plan is prepared, the operator must:

(A) File an initial plan of operations describing the proposed operations to the degree reasonably foreseeable then; and

(B) Thereafter, file one or more supplemental plans of operations when the operations the operator proposes to conduct are not approved by the current plan of operations.

(ii) A supplemental plan of operations provided for by paragraph (d)(2)(i)(B) of this section is subject to all provisions set forth in this subpart applicable to an initial plan of operations.

(3) The operator must transmit the proposed plan of operations to the District Ranger having jurisdiction over the lands on which the proposed operations would be conducted.

(4) The operator must not begin the operations described by the proposed plan of operations before the plan of operations has been approved pursuant to § 228.6(c)(1) and the requirements of § 228.6 are otherwise satisfied.

(e) *Demanding a complete bonded notice or an approved plan of operations.* The District Ranger will notify the operator that the operator must:

(1) Hold a complete bonded notice which is in effect or an approved plan of operations which is in effect, whichever is appropriate, if the District Ranger determines the operator intends to commence or previously began operations that are likely to cause or are causing significant disturbance of National Forest System surface resources without a required bonded notice or plan of operations; or

(2) Obtain a new complete bonded notice which has taken effect, or a new, modified or supplemental plan of operations which has taken effect, whichever is appropriate, if significant disturbance of National Forest System surface resources which is not fully described by a complete bonded notice currently in effect or which is not approved by a plan of operations currently in effect is likely to occur or is occurring.

(f) *Proposed bonded notice and plan of operations content requirements.* A proposed bonded notice or a proposed plan of operations must include:

(1) The name and legal mailing address of all operators (and all claimants if they are not the operators) and their lessees, assigns, or designees.

(2) A map or sketch showing information sufficient to locate the proposed area of operations on the ground, the location, and, if applicable, the route, of all existing and proposed roads, trails, bridges, landing areas for aircraft, and other access facilities to be used in connection with the operations, and the approximate location and size of areas where National Forest System surface resources will be disturbed.

(3) Information sufficient to describe or identify the type of operations proposed and how they would be conducted, the proposed mode of transportation to be used, the type and standard of all existing and proposed roads, trails, bridges, landing areas for aircraft, and other access facilities, the proposed period during which the proposed operations will occur, and proposed measures to be taken to meet the environmental protection requirements set forth in § 228.9.

(4) A preliminary estimate of the cost of reclaiming National Forest System lands calculated in accordance with § 228.13(c) but based only upon the reclamation requirements set forth in § 228.9(i) and (k), along with an explanation sufficient to show how the estimate was calculated.

(g) *Collection of information.* The information collection required for: a notice of intent to operate; proposed initial, modified, or supplemental plan of operations; and cessation of operations, is approved and assigned Office of Management and Budget Control (OMB) No. 0596–0022. The information collection required for a proposed bonded notice has been submitted to OMB as a new collection.

§ 228.5 Bonded notice—completeness review.

(a) The District Ranger will promptly review a proposed bonded notice submitted in accordance with § 228.4(c)(1) and, as part of that review, consider whether:

(1) The proposed bonded notice satisfies the environmental protection requirements set forth in § 228.9;

(2) The proposed bonded notice adequately minimizes the adverse environmental impacts of the proposed operations on National Forest System surface resources;

(3) The proposed bonded notice includes the information specified by § 228.12(d);

(4) The proposed bonded notice properly estimates the cost of reclaiming all National Forest System lands that would be affected by the proposed operations; and

(5) The operator or any person acting on the operator's behalf has established a pattern of noncompliance with requirements applicable to past or ongoing operations.

(i) If the District Ranger finds such a pattern of noncompliance, the District Ranger may recommend the applicable Forest Supervisor require the operator to submit a proposed plan of operations in lieu of the proposed bonded notice. The District Ranger's recommendation must be accompanied by a statement setting forth in detail the supporting facts and reasons for the recommendation, copies of which will be sent to the operator when they are sent to the Forest Supervisor.

(ii) The operator will have not less than 15 days to respond and show cause why the Forest Supervisor should not require the operator to submit a proposed plan of operations.

(iii) The Forest Supervisor will render a decision on the District Ranger's recommendation within 30 days of receiving the operator's response to the recommendation or the closure of the period for the operator to submit such a response.

(A) If the Forest Supervisor disagrees with the District Ranger's recommendation, the Forest Supervisor will direct the District Ranger to resume prompt review of the proposed bonded notice.

(B) If the Forest Supervisor agrees with the District Ranger's recommendation, the Forest Supervisor will advise the operator the proposed bonded notice will not receive further review and the operator must submit a proposed plan of operations in lieu of the notice if the operator wishes to conduct the proposed operations.

(b) Within 15 days of receipt of a proposed bonded notice, the District Ranger will notify the operator that:

(1) The bonded notice is complete;

(2) The proposed operations do not require a bonded notice;

(3) The proposed operations require an approved plan of operations;

(4) The Forest Service is reviewing the proposed bonded notice, more time is necessary to conclude the review for the reasons specified, and the District Ranger will complete the review within an additional 15 day period: Provided, however, That days during which the area of operations is inaccessible for inspection will not be counted when computing the 15 day period; or

(5) The proposed bonded notice is incomplete identifying the deficiencies the operator must remedy to meet the requirements of this subpart.

(c) If the proposed bonded notice is incomplete and the operator submits additional information in response to a notification pursuant to paragraph (b)(5) of this section, the District Ranger will repeat the review process set forth in paragraphs (a) and (b) of this section as necessary until the District Ranger takes an action specified by paragraphs (b)(1) through (3) of this section.

(d) When the District Ranger advises the operator in writing that a bonded notice is complete, the operator must furnish the District Ranger a reclamation bond complying with § 228.13(a) through (c). If the District Ranger determines the reclamation bond the operator submitted is consistent with the complete bonded notice and § 228.13(a) through (c), the District Ranger will promptly inform the operator in writing that as of such day the complete bonded notice is in effect and the operations described by the notice may begin. The operator must conduct the operations in compliance with the complete bonded notice and the requirements set forth in this subpart.

(1) A complete bonded notice has a two year term which begins on the bonded notice's effective date.

(2) All operations described by the bonded notice, including reclamation, must be concluded within the two year period specified by paragraph (d)(1) of this section.

(3) A complete bonded notice may not be extended. If the operator requires additional time to complete operations subject to § 228.4(c), the operator must submit a new bonded notice to the District Ranger in accordance with § 228.4(c)(2) and (3).

(e) An operator must not segment logically related exploratory operations within a particular area by filing a series of proposed bonded notices for the purpose of avoiding the requirement to submit a proposed plan of operations.

(f) The District Ranger may hold a portion of the reclamation bond for a complete bonded notice provided by the operator in accordance with § 228.13(a) through (c) and paragraph (d) of this section for monitoring purposes no longer than two years following completion of reclamation. However, the District Ranger will promptly return any portion of the reclamation bond covering reclamation activities not requiring monitoring to the operator in accordance with § 228.13(f)(2).

(g) Holding a complete bonded notice in effect does not relieve the operator from compliance with all other applicable Federal and State laws, including but not limited to the Federal Water Pollution Control Act (Clean Water Act), as amended (33 U.S.C. 1251–1387), the Clean Air Act, as amended (42 U.S.C. 1857 et seq.), and the Endangered Species Act (16 U.S.C. 1531–1536, 1538–1540).

§ 228.6 Plan of operations—approval.

(a) The District Ranger will promptly acknowledge receipt of a proposed plan of operations submitted in accordance with § 228.4(d)(1) to the operator.

(b) The authorized officer will promptly review a proposed plan of operations. As part of the review, the authorized officer will:

(1) Consider whether the proposed plan of operations satisfies the environmental protection requirements set forth in § 228.9;

(2) Consider whether the proposed plan of operations adequately minimizes the adverse environmental impacts of the proposed operations on National Forest System surface resources;

(3) Consider whether the proposed plan of operations includes the information specified by § 228.12(d);

(4) Consider whether the proposed plan of operations properly estimates the cost of reclaiming all National Forest System lands that would be affected by the proposed operations;

(5) Evaluate the operator's compliance with paragraph (i)(3) of this section; and

(6) Conduct an environmental analysis of the proposed plan of operations and determine whether preparation of an environmental assessment or an environmental impact statement is required.

(i) An initial, supplemental or modified plan of operations occasionally may, but often will not, require preparation of an environmental assessment or an environmental impact statement. Environmental impacts of proposed operations will vary substantially depending on whether the nature of the operations is exploration, development, or processing, and on the scope of operations (such as size of operations, construction required, length of operations and equipment required), causing varying degrees of disturbance and impacts to vegetative resources, soil, water, air, or wildlife.

(ii) The Forest Service will prepare any required environmental assessment or environmental impact statement.

(c) Within 30 days of receipt of a proposed plan of operations, the

authorized officer will notify the operator that:

(1) The plan of operations is approved;

(2) The proposed operations do not require an approved plan of operations;

(3) The authorized officer is reviewing the proposed plan of operations, more time is necessary to conclude the review for the reasons specified, and the authorized officer will complete the review within an additional 60 day period: *Provided, however,* That days during which the area of operations is inaccessible for inspection will not be counted when computing the 60 day period;

(4) The proposed plan of operations cannot be approved until an environmental assessment has been prepared and, if appropriate, a finding of no significant impact has been made, or a final environmental impact statement has been prepared; or

(5) The proposed plan of operations is inadequate identifying the deficiencies the operator must remedy to meet the requirements of this subpart.

(d) If the proposed plan of operations is inadequate and the operator submits additional information in response to a notification pursuant to paragraph (c)(5) of this section, the authorized officer will repeat the review process set forth in paragraphs (b) and (c) of this section as necessary until the authorized officer takes an action specified by paragraph (c)(1) or (c)(2) of this section.

(e) When the authorized officer advises the operator in writing that the plan of operations is approved, the operator must provide to the authorized officer a reclamation bond complying with § 228.13(a) through (c). If the authorized officer determines the reclamation bond the operator submitted is consistent with the approved plan of operations and § 228.13(a) through (c), the authorized officer will promptly direct the operator to sign the approved plan of operations if the operator has not already done so.

(f) After the requirements of paragraph (e) of this section have been met, the authorized officer will promptly countersign and date the approved plan of operations and inform the operator in writing the approved plan of operations is in effect and the operations approved by the plan may begin. The operator must conduct the operations in compliance with the approved plan of operations and the requirements set forth in this subpart.

(g) Before an approved plan of operations takes effect, the authorized officer will approve those operations required for timely compliance with Federal and State laws providing such operations will be conducted so as to minimize their adverse environmental impacts on National Forest System surface resources.

(h) The authorized officer may require an operator to obtain approval of a modified plan of operations under following procedures.

(1) The authorized officer will not require an operator to submit and obtain approval of a modified plan of operations unless the authorized officer determines that:

(i) As approved, the operations do not adequately minimize adverse impacts;

(ii) As approved, the operations do not, or likely will not, meet the environmental protection requirements specified by § 228.9;

(iii) The approved operations are causing unforeseen significant disturbance of National Forest System surface resources;

(iv) The approved plan of operations must be brought into conformance with applicable federal law or regulation, including newly adopted federal law or regulation;

(v) The approved plan of operations needs to respond to new information not available when the plan was approved; or

(vi) Errors or omissions were made when the plan of operations was approved.

(2) An authorized officer considering whether to require an operator to obtain approval of a modified plan of operations will:

(i) Provide notice to the operator in writing which:

(A) Sets forth the reasons why the authorized officer believes modification of the approved plan of operations is required; and

(B) Gives the operator not less than 30 days to respond and show cause why the authorized officer should not require modification of the approved plan of operations;

(ii) Consider the operator's response and all other information in the administrative record in deciding whether to require modification of the approved plan of operations; and

(iii) Issue a decision stating whether modification of the approved plan of operations is required, and if the decision requires modification of the approved plan of operations, the decision also will:

(A) Explain its basis;

(B) Identify all required modifications to the plan of operations;

(C) Specify the date by which the operator must submit the proposed modified plan of operations; and

(D) Identify any opportunity for the operator to file an administrative appeal of the decision.

(3) A modified plan of operations provided for by introductory text of paragraph (h) of this section is subject to all provisions set forth in this subpart applicable to an initial plan of operations, except as otherwise provided by § 228.16.

(4) Operations may continue in accordance with the approved plan of operations until a modified plan is approved, unless the authorized officer determines the operations are:

(i) Unnecessarily or unreasonably causing injury, loss or damage to National Forest System surface resources; or

(ii) Causing irreparable injury, loss or damage to National Forest System surface resources; and advises the operator of those measures needed to avoid such damage.

(i) If the operations to be conducted under a plan of operations:

(1) Can reasonably be expected to result in a point source discharge into waters of the United States, the operator may be required to obtain permits under the Federal Water Pollution Control Act, as amended (33 U.S.C. 1251–1387) (Clean Water Act sections 402, 404).

(2) Will result in the discharge of dredged or filled materials into waters of the United States, the operator may be required to obtain permits under the Federal Water Pollution Control Act, as amended (33 U.S.C. 1251–1387) (Clean Water Act sections 402, 404).

(3) May result in any discharge into the navigable waters, the operator must obtain the certification required by Clean Water Act section 401(a)(1) from the appropriate Federal or state entity and present a copy of the certification to the authorized officer.

(i) Pursuant to Clean Water Act section 401, the Forest Service cannot approve a proposed plan of operations until the operator has obtained the required certification and presented it to the authorized officer unless the certification requirement has been waived by the appropriate Federal or State entity.

(ii) If the appropriate Federal or state entity denies a required Clean Water Act section 401(a)(1) certification, the Forest Service cannot approve a proposed plan of operations.

(j) Holding an approved plan of operations in effect does not relieve the operator from compliance with all other applicable Federal and State laws, including but not limited to the Federal Water Pollution Control Act (Clean Water Act), as amended (33 U.S.C. 1251–1387), the Clean Air Act, as amended (42 U.S.C. 1857 *et seq.*), and the Endangered Species Act (16 U.S.C. 1531–1536, 1538–1540).

(k) When the operator considers the operations, including reclamation, approved by the plan of operations to have been completed, the operator may notify the authorized officer. If the authorized officer agrees, the authorized officer will advise the operator in writing that the operator's obligations under the plan of operations have been completed and the plan has been closed.

§ 228.7 Availability of information to the public.

Except as provided herein, all information and data submitted by an operator pursuant to the regulations of this subpart is available for examination by the public at the Office of the District Ranger in accordance with the provisions of 7 CFR 1.1 through 1.24, and §§ 200.6 through 200.8 of this chapter. Specifically identified information and data submitted by the operator as confidential concerning trade secrets or privileged commercial or financial information will not be available for public examination, except upon a determination made pursuant to the procedures at 7 CFR 1.12, that such information is not exempt by law from mandatory disclosure under the Freedom of Information Act, 5 U.S.C. 552. Information and data generally found to be exempt from disclosure that accordingly may be withheld from public examination includes, but is not limited to:

(a) Known or estimated outline of the mineral deposits and their location, attitude, extent, outcrops, and content;

(b) Known or planned location of exploration pits, drill holes, excavations pertaining to location and entry pursuant to the United States mining laws; and

(c) Other commercial information which relates to competitive rights of the operator.

§ 228.8 Inspecting operations and remedying noncompliance.

(a) Forest Service officers will periodically inspect operations to determine whether an operator is complying with the regulations of this subpart and, if applicable, a complete bonded notice or an approved plan of operations.

(b) If an operator fails to comply with the regulations of this subpart or, if applicable, a complete bonded notice or an approved plan of operations and the operator's noncompliance unnecessarily or unreasonably is causing injury, loss or damage to National Forest System surface resources, the authorized officer will serve a notice of noncompliance upon the operator or, if applicable, the operator's designated agent in person or by certified mail. The notice of noncompliance must:

(1) Identify all requirements with which the operator's noncompliance unnecessarily or unreasonably is causing injury, loss or damage to National Forest System surface resources;

(2) Specify the actions which the operator must take to come into compliance with the requirements identified pursuant to paragraph (b)(1) of this section and to remedy all injury, loss or damage to National Forest System surface resources which resulted from the operator's noncompliance with those requirements; and

(3) Specify one or more dates by which the operator must complete the actions specified pursuant to paragraph (b)(2) of this section. Generally, an operator will not be given more than 30 days to complete actions specified pursuant to paragraph (b)(2) of this section: *Provided, however,* That days on which the authorized officer determines the area of operations is inaccessible will not be included when computing the period the operator is allowed to complete those actions.

(c) The authorized officer will take additional enforcement actions if the operator fails to comply with a notice of noncompliance within the time provided by the notice unless the authorized officer determines there was good cause for the operator's failure to comply. The additional enforcement actions include, but are not limited to, one or more of the following:

(1) Requesting the initiation of a civil action in a United States District Court seeking appropriate relief such as declaratory relief, injunctive relief and monetary damages;

(2) Issuing a Violation Notice citing the operator for violating a prohibition set forth in part 261 of this chapter; and;

(3) Attaching the reclamation bond provided by the operator and using the proceeds to take all necessary measures to complete the actions specified by the notice of noncompliance pursuant to paragraph (b)(2) of this section.

§ 228.9 Environmental protection requirements.

The operator must conduct all operations, where practical, so as to minimize the adverse environmental impacts on National Forest System surface resources. Environmental protection requirements operations must satisfy include, but are not limited to:

(a) *Air quality.* The operator must comply with applicable Federal and State air quality standards, including the requirements of the Clean Air Act, as amended (42 U.S.C. 1857 *et seq.*).

(b) *Water quality.* The operator must comply with applicable Federal and State water quality standards, including regulations issued pursuant to the Federal Water Pollution Control Act, as amended (33 U.S.C. 1151 *et seq.*).

(c) *Solid wastes.* The operator must:

(1) Comply with applicable Federal and State standards for the disposal and treatment of solid wastes as defined by the Resources Conservation and Recovery Act, as amended (42 U.S.C. 6901 *et seq.*);

(2) Remove from National Forest System lands, dispose of, or treat all non-mine garbage, refuse, or waste to minimize, so far as is practical, its impact upon the environment and National Forest System surface resources; and

(3) Deploy, arrange, dispose of, or treat all tailings and other mine wastes resulting from the operations so as to minimize their adverse impact upon the environment and National Forest System surface resources.

(d) *Scenic values.* The operator must, so far as is practical, harmonize operations with scenic values through such measures as the design and location of operating facilities, including roads and other means of access, vegetative screening of operations, and construction of structures and improvements which blend with the landscape.

(e) *Endangered species of fish, wildlife and plants.* The operator must take all measures required by the Endangered Species Act, as amended (16 U.S.C. 1538) to protect federally listed threatened or endangered species of fish, wildlife and plants and, if applicable, their designated critical habitats.

(f) *Fisheries and wildlife habitat.* In addition to complying with the water quality requirements set forth in paragraph (b) of this section, the solid waste requirements set forth in paragraph (c) of this section, and the endangered species requirements set forth in paragraph (e) of this section, the operator must take all practical measures to maintain and protect fisheries and wildlife habitat that may be affected by the operations.

(g) *Roads.* The operator must construct and maintain all roads so as to assure adequate drainage and, where practical, to prevent or otherwise minimize damage to soil, water, and other resource values. Unless otherwise approved by the authorized officer, when a road is no longer required for the operations, the operator must:

(1) Close the road to normal vehicular traffic;

(2) Remove bridges and culverts associated with the road;

(3) Construct cross drains, dips, or water bars required to prevent or control water flow over or from the road surface; and

(4) Reshape the road surface to, so far as is practical, the contour closest to the stable natural contour;

(h) *Maintenance and public safety.* Throughout the operations, the operator must maintain all structures, equipment, and facilities in a safe, neat, and workmanlike manner. Where the operations cause hazardous sites or conditions, the operator must mark them by signs or other identification, isolate them by fences, or otherwise make them inaccessible to protect the public in accordance with Federal and State laws and regulations.

(i) *Removal of structures and equipment.* Within the applicable period specified by paragraph (k)(2) of this section, the operator must remove all structures, whether temporary or permanent, facilities, and personal property, including equipment, located within the area of operations and otherwise clean up the area of operations. The United States, at its discretion, may take title to any property the operator does not remove from the area of operations within the applicable period. Such property of the United States is subject to removal and disposition at the Forest Service's discretion consistent with applicable laws and regulations.

(j) *Prevention and control of fire.* The operator must:

(1) Comply with all applicable Federal and State fire laws and regulations;

(2) Take all practical measures to prevent and suppress fires on the area of operations; and

(3) Require all persons, including but not limited to employees, contractors and subcontractors, who conduct or support the operations to comply with paragraphs (j)(1) and (j)(2) of this section.

(k) *Reclamation.* The operator must reclaim National Forest System lands disturbed by the operations by taking concurrent, seasonal, interim and long-term measures to, where practical, prevent or otherwise minimize onsite and off-site damage to the environment and National Forest System surface resources.

(1) The operator must begin reclamation at the earliest possible time during the operations.

(2) The operator must complete reclamation:

(i) Within the two-year term of a complete bonded notice provided by § 228.5(d)(1); or

(ii) Except as otherwise provided by an approved plan of operations, within one year of the exhaustion of the valuable mineral deposit, the conclusion of the operations, or a cessation of the operations that is not seasonal.

(3) The reclamation measures taken by the operator must, where practical:

(i) Prevent or control erosion and landslides;

(ii) Prevent or control water runoff;

(iii) Isolate, remove or control hazardous materials;

(iv) Reshape and revegetate disturbed areas;

(v) Reshape road surfaces to the contour closest to the stable natural contour;

(vi) Rehabilitate fisheries and wildlife habitat; and

(vii) Protect groundwater.

§ 228.10 Reasonably incident uses.

(a) The operator must not occupy or use National Forest System lands for any purpose not reasonably incident to locatable mineral prospecting, exploration, development, mining, processing, or reclamation except as provided by § 228.12(e).

(b) The operator must not:

(1) Prevent or obstruct free passage or transit over National Forest System lands by any person except to the extent allowed for reasonable security and safety measures which are consistent with this subpart; or

(2) Conduct the following activities, which are not reasonably incident uses of National Forest System lands: Cultivating crops or produce; rearing or pasturing animals; storing, treating, processing, or disposing of non-mineral, hazardous, or toxic materials or waste generated elsewhere and brought onto National Forest System lands; operating rental, trade or manufacturing concerns; recycling or reprocessing of manufactured material such as scrap electronic parts, appliances, photographic film, and chemicals; searching for buried treasure, treasure trove, or archaeological specimens; operating hobby or curio shops, cafes, or tourist stands; maintaining, managing or hosting hunting or fishing camps; or providing outfitting or guiding services.

(c) When the authorized officer believes one or more proposed or current uses of National Forest System lands, other than those uses listed in paragraph (b) of this section, would not be or are not reasonably incident, the authorized officer may initiate a surface use determination.

(1) When the authorized officer initiates a surface use determination, the authorized officer will:

(i) Notify the operator in writing that a surface use determination will be conducted;

(ii) Identify the proposed or current uses of National Forest System lands the authorized officer believes may not be reasonably incident;

(iii) Give the operator not less than 30 days to respond and show why the specified uses of National Forest System lands would be or are reasonably incident; and

(iv) Consider, where current uses of National Forest System lands are the subject of the surface use determination, any request included in the operator's response for the authorized officer to allow one or more of such uses to continue while the surface use determination process is ongoing providing that the response contains a detailed explanation of the reasons why the operator's request should be granted.

(2) The authorized officer will not allow an operator to continue a current use of National Forest System lands which is the subject of an ongoing surface use determination if such use:

(i) Is unnecessarily or unreasonably causing injury, loss or damage to National Forest System surface resources; or

(ii) Is causing irreparable injury, loss or damage to National Forest System surface resources.

(3) An operator allowed, while the surface use determination process is ongoing, to continue a use of National Forest System lands considered by the surface use determination, must not take any action resulting, or likely to result, in an increase in the scope, extent, frequency, state of completion, or impact of such use.

(4) The certified Forest Service mineral examiner will consider the operator's response in completing the surface use determination. The mineral examiner also will prepare a report finding whether the uses of National Forest System lands examined in the surface use determination are reasonably incident and explaining the basis for such findings.

(5) The authorized officer will issue a decision, taking into consideration the findings of the surface use determination report, as to whether each use of National Forest System lands examined in the report is reasonably incident.

(i) The decision will explain any difference between the authorized officer's basis for concluding that a use of National Forest System lands is not reasonably incident and the basis of the

surface use determination report's finding with respect to such use.

(ii) If the authorized officer concludes that any use of National Forest System lands examined in the surface use determination is not reasonably incident to locatable mineral prospecting, exploration, development, mining, processing, reclamation or closure, the authorized officer's decision also will:

(A) Direct the operator to cease such use of National Forest System lands;

(B) Specify actions which the operator must take to remedy all injury, loss or damage to National Forest System surface resources which resulted from such use of National Forest System lands; and

(C) Specify one or more dates by which the operator must comply with paragraphs (c)(5)(ii)(A) and (B) of this section.

(iii) The Forest Service will promptly provide the authorized officer's decision and the surface use determination report to the operator.

§ 228.11 Cessation of operations.

(a) When an operator proposes a cessation of operations that is not seasonal and the applicable approved plan of operations contains provisions governing such a cessation of operations, the operator must immediately file a statement with the District Ranger:

(1) Specifying the date when the operator expects the cessation of operations to end;

(2) Providing an estimate of the extended duration of the operations;

(3) Indicating which, if any, of the structures, equipment and facilities within the area of operations the operator intends to remove during the cessation; and

(4) Indicates which, if any, of the structures, equipment and facilities within the area of operations the operator intends to retain during the cessation.

(b) When an operator proposes a cessation of operations that is not seasonal and the applicable approved plan of operations does not contain provisions governing such a cessation of operations, the operator must immediately file a statement with the District Ranger:

(1) Including the information specified by paragraphs (a)(1) through (4) of this section;

(2) Including a schedule for the removal, as soon as practical, of all items identified by the operator in accordance with paragraph (a)(3) of this section;

(3) Identifying all measures the operator proposes to take to comply with §§ 228.9 and 228.10 during such cessation of operations; and

(4) Including a schedule for the performance of all measures identified by the operator pursuant to paragraph (b)(3) of this section.

(c) Where a cessation of operations statement is filed pursuant to paragraph (b) of this section, the authorized officer will:

(1) Review any schedule the operator proposes pursuant to paragraph (b)(2) of this section for the removal of items and specify any practical revision of the schedule which the operator must implement to minimize damage to the environment and National Forest System surface resources;

(2) Review the measures the operator proposes to take pursuant to paragraph (b)(3) of this section and specify all different or additional practical measures which the operator must take to minimize damage to the environment and National Forest System surface resources;

(3) Review the schedule the operator proposes pursuant to paragraph (b)(4) of this section for the implementation of all measures identified by the operator and specify any practical revision of the schedule which the operator must implement to minimize damage to the environment and National Forest System surface resources;

(4) Specify a practical schedule for the operator's implementation of all measures required by the authorized officer pursuant to paragraph (c)(2) of this section; and

(5) Authorize any departure from the requirements of § 228.9(k)(2)(ii) which the authorized officer deems appropriate.

(d) If the duration of a cessation of operations will exceed one year, the process set forth in paragraphs (a) through (c) of this section, as applicable, must be completed at the beginning of the second and successive years.

(e) Throughout any cessation of operations, the operator must maintain a reclamation bond complying with § 228.13(a) through (c). When a cessation of operations will exceed, or has exceeded, one season and the applicable approved plan of operations does not specify the amount of bond coverage the operator must maintain during a cessation of operations that is not seasonal, the operator also must:

(1) Augment the existing reclamation bond by the amount the authorized officer required to cover the operator's interim obligations pursuant to this section; or

(2) Provide a separate reclamation bond complying with the applicable requirements of § 228.13(a) through (c) in the amount the authorized officer required to cover the operator's interim obligations pursuant to this section.

(f) If the authorized officer determines an operator has ceased operations, the cessation is not attributable to seasonal considerations, and the operator has not filed a cessation of operations statement with the District Ranger pursuant to paragraphs (a) or (b) of this section, the authorized officer will require the operator to comply with the applicable paragraph within 30 days.

§ 228.12 Access for operations.

(a) An operator is entitled to reasonable access to conduct locatable mineral operations on National Forest System lands providing that such access:

(1) Is not prohibited by Federal law or regulation; and

(2) Complies with applicable requirements set forth elsewhere in this chapter, including, but not limited to, § 228.14, and parts 212 and 261 of this chapter.

(b) The operator must utilize existing means of access when it is economically and technically practical.

(c) The operator must not construct, reconstruct, or improve a road, trail, bridge, landing area for aircraft, or another access facility located on National Forest System lands before a complete bonded notice or an approved plan of operations providing for such work takes effect.

(d) A complete bonded notice or an approved plan of operations must:

(1) Identify the means of access the operator will use in conducting operations on National Forest System lands;

(2) Specify the location, and, if applicable, the route, of all roads, trails, bridges, landing areas for aircraft, and other access facilities located on National Forest System lands which the operator must use in conducting the operations; and

(3) Specify the design standards for all roads, trails, bridges, landing areas for aircraft, and other access facilities located on National Forest System lands the operator must use in conducting the operations.

(e) When an operator is conducting operations on National Forest System lands, the Forest Service may elect to regulate access on National Forest System lands sought by the operator to perform associated work on lands for which a patent has been issued pursuant to the United States mining laws by means of a complete bonded notice or an approved plan of operations. Such access to perform associated work on private lands is

subject to the requirements of this subpart provided that:

(1) Nothing in this subpart is deemed to abridge any independent right the operator has to such access; and

(2) Nothing in this subpart is deemed to confer an independent right to such access upon the operator.

§ 228.13 Reclamation bonds for bonded notices and plans of operation.

(a) The operator must provide the Forest Service a reclamation bond before a complete bonded notice or an approved plan of operations takes effect pursuant to § 228.5(d) or § 228.6(e), respectively. The reclamation bond must comply with this paragraph and paragraph (b) of this section, and be in the amount calculated pursuant to paragraph (c) of this section.

(1) An operator who will be authorized to conduct a single operation requiring a complete bonded notice or an approved plan of operations must furnish an individual reclamation bond.

(2) An operator, who will be authorized to conduct operations under two or more bonded notices, plans of operations, or a combination thereof, may furnish:

(i) An individual reclamation bond for any complete bonded notice or approved plan of operations; or

(ii) A blanket reclamation bond covering statewide or nationwide operations, providing the amount of the reclamation bond is at least equal to the cost to reclaim all operations covered by the reclamation bond as calculated pursuant to paragraph (c) of this section.

(A) Upon the authorized officer's request, the operator must provide information demonstrating the amount of a blanket reclamation bond is at least equal to the aggregate cost to reclaim all operations covered by that reclamation bond.

(B) The operator must immediately inform all District Rangers administering lands on which operations covered by a blanket reclamation bond are currently authorized whenever the amount of such reclamation bond becomes less than the aggregate cost to reclaim all operations covered by the reclamation bond.

(b) One form of reclamation bond an operator may furnish is a surety bond naming the USDA Forest Service as a beneficiary, satisfies the requirements of Treasury Department Circular 570, and is available in full to the Forest Service.

(1) In lieu of furnishing a surety bond as the required reclamation bond, the operator may use a depository of funds approved by the Forest Service to:

(i) Deposit cash in an amount equal to the required dollar amount of the reclamation bond; or

(ii) Deposit negotiable securities of the United States having a market value at the time of deposit not less than the required dollar amount of the reclamation bond.

(2) The operator can use any combination of acceptable surety bonds, cash or negotiable securities of the United States as the reclamation bond providing the total amount of these instruments equals the estimated cost to reclaim National Forest System lands calculated pursuant to paragraph (c) of this section.

(3) When reclamation an operator is required to complete includes long-term monitoring, maintenance, or treatment measures to prevent or otherwise minimize onsite or off-site damage to National Forest System surface resources, the operator also may establish an escrow account in a depository of funds approved by the Forest Service to finance those measures, providing the escrow account's annual earnings will be adequate to perform all such required measures annually on National Forest System lands. When the operator establishes an acceptable escrow account, the amount of the reclamation bond the operator must furnish pursuant to paragraph (a) of this section will be reduced by the amount of the reclamation cost attributable to the performance of required long-term monitoring, maintenance, or treatment measures as estimated pursuant to paragraph (c) of this section.

(c) After the District Ranger or another authorized officer advises the operator in writing that a bonded notice is complete or a plan of operations is approved pursuant to § 228.5(d) or § 228.6(e), respectively, the operator must provide the Forest Service officer an estimate of the cost to reclaim National Forest System lands along with an explanation sufficient to show how the estimate was calculated.

(1) The estimate must set forth the cumulative cost of fully reclaiming all National Forest System lands affected by the operations in accordance with the requirements of § 228.9(i), § 228.9(k), and the applicable complete bonded notice or approved plan of operations, assuming the Forest Service were to hire a contractor to perform all required reclamation.

(2) In estimating the cost to reclaim fully National Forest System lands, no value will be given to any property, such as structures, whether temporary or permanent, other facilities and personal property, including equipment, that an operator is required to remove from the area of operations in accordance with § 228.9(i).

(3) The operator's estimate of the cost to reclaim National Forest System lands must be acceptable to the Forest Service.

(d) The operator must maintain a reclamation bond complying with the requirements of this section until the reclamation bond is fully released pursuant to paragraph (e) of this section or the reclamation bond is completely forfeited pursuant to paragraph (f) of this section.

(e) When the authorized officer believes there has been a change in conditions relevant to reclamation of an operation conducted pursuant to an approved plan of operations, the officer may reassess the adequacy of the existing reclamation bond. The authorized officer will consider whether the residual amount of the reclamation bond equals the current cost of all remaining required reclamation as estimated by the authorized officer in accordance with paragraph (c) of this section. The authorized officer also will consider whether the reclamation bond otherwise currently satisfies paragraphs (a) and (b) of this section.

(1) When the authorized officer finds the residual amount of the reclamation bond exceeds the current cost of all remaining required reclamation, as estimated by the authorized officer in accordance with paragraph (c) of this section, within 30 days the authorized officer will:

(i) Calculate the amount of the reclamation bond to be released by subtracting such estimated cost of reclamation from the residual amount of the reclamation bond;

(ii) Release, or send the person who provided or holds the reclamation bond written authorization to release, the amount of the reclamation bond calculated in accordance with paragraph (e)(1)(i) of this section; and

(iii) Send the operator a copy of any letter described in paragraph (e)(1)(ii) of this section.

(2) When the authorized officer believes the current cost of all remaining required reclamation, as estimated by the authorized officer in accordance with paragraph (c) of this section, exceeds the residual amount of the reclamation bond or such reclamation bond otherwise does not satisfy paragraphs (a) and (b) of this section, the authorized officer will:

(i) Provide notice to the operator in writing which:

(A) Sets forth the reasons why the authorized officer believes augmentation of the reclamation bond's

amount or other adjustment of the reclamation bond is required;

(B) Explains the assumptions and calculations the authorized officer utilized in proposing any augmentation of the reclamation bond's amount; and

(C) Gives the operator not less than 30 days to respond and show cause why the authorized officer should not require augmentation or adjustment of the reclamation bond.

(ii) Consider the operator's response and all other information in the administrative record in deciding whether to require augmentation or adjustment of the reclamation bond.

(iii) Issue a decision stating whether augmentation or adjustment of the reclamation bond is required, and if the decision requires augmentation or adjustment of the reclamation bond, the decision also will:

(A) Explain its basis;

(B) Specify any required augmentation of the reclamation bond's amount or any other adjustment of the reclamation bond;

(C) Specify the date by which the operator must provide the authorized officer proof the reclamation bond has been augmented or adjusted in accordance with the terms of the authorized officer's decision; and

(D) Identify any opportunity for the operator to file an administrative appeal of the decision.

(3) If the operator fails to comply with a decision requiring augmentation or other adjustment of the reclamation bond issued pursuant to paragraph (e)(2)(iii) of this section by the date specified in the decision, or any extension thereof, the authorized officer will take appropriate enforcement action in accordance with § 228.8.

(f) The authorized officer will release, or send the person who provided or holds the reclamation bond written authorization to release, the reclamation bond, in whole or in part, as specified, after:

(1) The operator replaces the existing reclamation bond, in whole or in part, with a new reclamation bond satisfying the requirements of paragraphs (a) through (c) of this section, in which case the amount of the previous bond that will be released is calculated by subtracting the current cost of all remaining required reclamation, as estimated by the authorized officer in accordance with paragraph (c) of this section, from the total of the residual amount of the previous bond plus the amount of the new bond; or

(2) The Forest Service accepts any portion of final reclamation as having been completed in accordance with § 228.9(i), § 228.9(k), and the complete bonded notice or the approved plan of operations then in effect, in which case the amount of the reclamation bond that will be released is calculated by subtracting the current cost of all remaining required reclamation, as estimated by the authorized officer in accordance with paragraph (c) of this section, from the residual amount of the reclamation bond.

(g) An authorized officer considering forfeiture of an operator's reclamation bond will:

(1) Initiate forfeiture of all or part of the reclamation bond as necessary to complete reclamation of National Forest System lands affected by the operations in accordance with the requirements of § 228.9(i), § 228.9(k), and the applicable complete bonded notice or approved plan of operations when:

(i) The operator refuses or is unable to complete reclamation required by § 228.9(i), § 228.9(k), and the applicable complete bonded notice or approved plan of operations;

(ii) The operator fails to take an action on which the continuation of the reclamation bond is conditioned;

(iii) A petition has been filed under the Bankruptcy Code, 11 U.S.C. 101 *et seq.*, by the operator or the operator's creditors; or

(iv) The authorized officer determines reclamation is necessary to prevent environmental damage resulting from the operator's cessation of operations.

(2) Provide notice to the operator, and the reclamation bond surety, if applicable, in writing which:

(i) Sets forth the reasons why the authorized officer believes forfeiture of the reclamation bond is warranted;

(ii) Identifies the required reclamation the operator has not performed;

(iii) Specifies the amount of the bond to be forfeited based on the current cost of all required reclamation as estimated by the authorized officer in accordance with paragraph (c) of this section;

(iv) Gives the operator not less than 15 days to respond and show cause why the authorized officer should not forfeit the operator's reclamation bond; and

(v) Advises the operator may avoid forfeiture if, within 20 days or the period otherwise specified by the authorized officer, the operator:

(A) Begins the required reclamation in accordance with § 228.9(i), § 228.9(k), and the complete bonded notice or the approved plan of operations;

(B) Demonstrates, in writing, to the authorized officer's satisfaction that the operator will promptly complete the required reclamation in accordance with § 228.9(i), § 228.9(k), and the complete bonded notice or the approved plan of operations; or

(C) Demonstrates, in writing, to the authorized officer's satisfaction how another person will promptly complete the required reclamation and how this person has the ability to do so in accordance with § 228.9(i), § 228.9(k), and the complete bonded notice or the approved plan of operations.

(3) Consider any response submitted by the operator and all other information in the administrative record in deciding whether to forfeit the reclamation bond, in whole or in part.

(4) Issue a decision stating whether forfeiture of the reclamation bond will occur, and if the decision provides for forfeiture of the reclamation bond, the decision also will:

(i) Explain its basis;

(ii) Specify the amount of the reclamation bond that will be forfeited; and

(iii) Identify any opportunity for the operator to file an administrative appeal of the decision.

(5) Take appropriate enforcement action in accordance with § 228.8 when required reclamation is not promptly completed in accordance with § 228.9(i), § 228.9(k), and the complete bonded notice or the approved plan of operations after the operator demonstrated pursuant to paragraph (g)(2)(v)(B) or paragraph (g)(2)(v)(C) of this section the operator or another person, respectively, would promptly complete such reclamation.

(6) Refund to the operator, or if applicable the reclamation bond surety, any amount of the forfeited reclamation bond exceeding the cost of completing the required reclamation.

§ 228.14 Operations on withdrawn or segregated National Forest System lands including National Forest Wilderness.

(a) The United States mining laws apply to each National Forest Wilderness for the period specified by the Wilderness Act or subsequent establishing legislation to the same extent these laws were applicable prior to the date the Wilderness was designated by Congress as a part of the National Wilderness Preservation System.

(b) A person who holds a mining claim valid immediately prior to the inclusion of the lands encompassed by the mining claim within a National Forest Wilderness will be:

(1) Accorded the rights provided by the United States mining laws as applicable before the lands were added to the National Wilderness Preservation System; and

(2) Permitted access to such mining claim, providing the mining claim is wholly within the Wilderness, by means

consistent with the preservation of the Wilderness that have been or are being customarily used to access other valid mining claims completely surrounded by National Forest Wilderness.

(c) A person who holds a mining claim located on or after the date on which the lands encompassed by the mining claim were added to the National Wilderness Preservation System will:

(1) Be accorded the rights provided by the United States mining laws as then applicable to the land subject to all provisions specified by the establishing legislation; and

(2) Have no right or interest, subject to valid existing rights, in or to any locatable mineral deposit discovered, through prospecting, exploration, or otherwise uncovering the deposit, after the date on which the United States mining laws ceased to apply to the Wilderness.

(d) Within a National Forest Wilderness, an operator must:

(1) Limit the operations conducted to those then authorized by the United States mining laws, subject to valid existing rights;

(2) Conduct all operations in compliance with an approved plan of operations then in effect and the regulations set forth in this subpart;

(3) Refrain from constructing roads prior to obtaining written authorization to do so from the appropriate Forest Supervisor in accordance with § 228.12(c); and

(4) Have the right to cut and use the volume of mature timber needed for the extraction, removal, and beneficiation of a valuable locatable mineral deposit, providing:

(i) Such timber is not otherwise reasonably available; and

(ii) Such timber is cut in compliance with § 223.30 of this chapter and provisions set forth in the approved plan of operations reflecting sound principles of forest management, which as a minimum require the operator to:

(A) Harvest the timber in a manner which minimizes soil movement and damage from water runoff; and

(B) Take precautionary measures, including disposal of slash, to minimize damage to surface resources from forest insects, disease or fire related to the timber harvest.

(e) As authorized by the Wilderness Act, 16 U.S.C. 1133(d)(2), the Chief, Forest Service, will allow any activity, including prospecting, for the purpose of gathering information about minerals occurring within National Forest Wilderness:

(1) Drawing no distinction as to whether those minerals would be subject to location under the United States mining laws absent their withdrawal from those laws pursuant to 16 U.S.C. 1133(d)(3) or subsequent establishing legislation;

(2) Specifying no person will have any right or interest in or to any mineral deposit discovered through such activity; and

(3) Requiring that such activity be:

(i) Conducted in accordance with an approved plan of operations and all requirements of this subpart applicable to a proposed or approved plan of operations; and

(ii) Carried on in a manner compatible with the preservation of the wilderness environment as specified by the approved plan of operations.

(f) After the date on which the lands are withdrawn from appropriation under the United States mining laws, the authorized officer will not approve a plan of operations until the Forest Service has prepared a mineral examination report to consider whether the mining claim was valid before the withdrawal, and whether it remains valid. The authorized officer also may require preparation of a mineral examination report before approving a plan of operations or determining that a bonded notice is complete for operations on segregated National Forest System lands. When the report finds that a mining claim is invalid and the operator declines to revise the proposed operations to avoid the withdrawn or segregated National Forest System lands in question, the Forest Service will also request that BLM promptly initiate contest proceedings to determine the validity of all mining claims in question.

(g) If the Forest Service has not completed a mineral examination report being prepared in accordance with paragraph (f) of this section, if a completed mineral examination report prepared in accordance with paragraph (f) of this section finds that a mining claim is invalid, or if the validity of a mining claim subject to paragraph (f) of this section is the subject of a mineral contest or a federal judicial proceeding:

(1) Insofar as the National Forest System lands in question have been withdrawn from the operation of the United States mining laws, the authorized officer may:

(i) Approve a plan of operations for proposed operations on a disputed mining claim that are limited to taking samples to confirm or corroborate mineral exposures that were physically disclosed and existing on the mining claim before the segregation or withdrawal date, whichever is earlier; and

(ii) Approve a plan of operations for the operator to perform the minimum necessary annual assessment work on a disputed mining claim.

(2) Insofar as National Forest System lands in question have been segregated from the operation of the United States mining laws, the authorized officer may:

(i) Take the actions specified in paragraphs (g)(1)(i) and (ii) of this section; and

(ii) Review for completeness a bonded notice for proposed operations on a disputed mining claim that are limited to taking samples to confirm or corroborate mineral exposures that were physically disclosed and existing on the mining claim before the segregation date.

(h) While a mineral examination report is being prepared, initiation of a mineral contest is being considered, or the validity of the mining claim is the subject of a mineral contest or federal judicial proceeding, the Forest Service may suspend the time limit for responding to a proposed bonded notice or acting on a proposed plan of operations set forth in § 228.5(b) and § 228.6(c), respectively.

(i) When a mining claim has been conclusively determined to lack valid existing rights, whether by virtue of a Forest Service mineral examination report, a mineral contest, of Federal judicial proceedings, the operator must cease all operations, except required reclamation.

§ 228.15 Administrative appeals.

Decisions made by Forest Service officers pursuant to part 228, subpart A may be subject to appeal by the operator in accordance with part 251, subpart C, of this chapter.

§ 228.16 Applicability of this subpart.

(a) *Newly proposed operations.* This subpart applies to all operations proposed by an operator or after [Insert Effective Date of the Final Rule].

(b) *Preexisting notice of intent to conduct operations.* The operator may continue to conduct operations for 2 years after [Insert Effective Date of the Final Rule] under the terms of a notice of intent to conduct operations and the regulations in effect immediately before that date (see 36 CFR parts 200 to 299, revised as of July 1, 2007) providing:

(1) Such notice of intent to conduct operations was properly filed with the Forest Service more than 15 days prior to [Insert Effective Date of the Final Rule], the authorized officer has not since advised the operator the operations require an approved plan of operations, and such notice of intent to conduct operations remains in effect on

[Insert Effective Date of the Final Rule]; or

(2) Such notice of intent to conduct operations was properly filed with the Forest Service 15 or fewer days before [Insert Effective Date of the Final Rule] unless the District Ranger, within 15 days of receiving the notice of intent to conduct operations, advises the operator that the proposed operations require an approved plan of operations.

(c) *Preexisting proposed plans of operation.* Where an operator had properly filed a proposed plan of operations with the Forest Service before [Insert Effective Date of the Final Rule] but such plan of operations had not been approved or had not taken effect before that date, the operator is subject:

(1) To the provisions of this subpart except the plan of operations content requirements, § 228.4(f)(4), and the environmental protection requirements, § 228.9; and

(2) To the plan of operations content requirements and the requirements for environmental protection set forth in the regulations in effect immediately before [Insert Effective Date of the Final Rule]. (See 36 CFR 228.4(c) and (d), and 36 CFR 228.8 (2007).)

(d) *Preexisting approved plan of operations.* Where an operator had obtained approval of plan of operations before [Insert Effective Date of the Final Rule] and such plan of operations remains in effect on that date, the operator:

(1) Shall post a reclamation bond complying with the requirements of this subpart no later than [*Insert Date 180 Days After the Effective Date of the Final Rule*] unless—

(i) The operator had posted a bond prior to [Insert Effective Date of the Final Rule] which complied with the regulations in effect immediately before that date (see 36 CFR 228.13 (2007)); and

(ii) The bond complying with paragraph (d)(1)(i) of this section remains in effect and satisfies the requirements of this subpart.

(2) Is otherwise subject to the provisions of this subpart except the plan of operations content requirements, § 228.4(f)(4), and the environmental protection requirements, § 228.9.

(3) Is subject to the plan of operations content requirements and the requirements for environmental protection set forth in the regulations in effect immediately before [Insert Effective Date of the Final Rule]. (See 36 CFR 228.4(c) and (d), and 36 CFR 228.8 (2007).)

(4) Is subject to the terms and conditions of such approved plan of operations.

(e) *Preexisting unapproved modifications of approved plans of operation.* Where an operator had properly filed with the Forest Service a proposed modification of a plan of operations that had been approved and had taken effect before [Insert Effective Date of the Final Rule] and remains in effect, but such modification had not been approved or had not taken effect before that date, the operator is subject:

(1) To the provisions of this subpart, including paragraph (d)(1) of this section, except the plan of operations content requirements, § 228.4(f)(4), and the environmental protection requirements, § 228.9;

(2) To the plan of operations content requirements and the requirements for environmental protection set forth in the regulations in effect immediately before [Insert Effective Date of the Final Rule]. (see 36 CFR 228.4(c) and (d), and 36 CFR 228.8 (2007)); and

(3) With respect to all operations not governed by the plan of operations modification, to the terms and conditions of the unmodified plan of operations.

(f) *Newly proposed modifications of preexisting approved plans of operation.* Where an operator, on or after [Insert Effective Date of the Final Rule] files with the Forest Service a proposed modification of a plan of operations that had been approved and had taken effect before that date and remains in effect, the operator is subject either to paragraph (f)(1) or (f)(2) of this section, depending upon the scope of the proposed modification. In either case, the operator also is subject to paragraph (f)(3) of this section.

(1) If the proposed modification will govern operations subject to the previously approved plan of operations, the operator may seek to show to the authorized officer's satisfaction that it is impractical for economic, environmental, safety, or technical reasons to apply the plan of operations content requirements, § 228.4(f)(4), and the environmental protection requirements, § 228.9, to the plan of operations modification.

(i) When the authorized officer finds such impracticality, the operator, with respect to the operations that will be governed by the modification, is subject:

(A) To the provisions of this subpart except the plan of operations content requirements, § 228.4(f)(4), and the environmental protection requirements, § 228.9; and

(B) To the plan of operations content requirements and the requirements for environmental protection set forth in the regulations in effect immediately before [Insert Effective Date of the Final Rule] (See 36 CFR 228.4(c) and (d), and 36 CFR 228.8 (2007)).

(ii) When the authorized officer does not find such impracticality, the operator is subject to this subpart with respect to the operations governed by the modification.

(2) If the proposed modification will govern new operations or additional acreage, the operator is subject to this subpart with respect to such operations and such acreage.

(3) With respect to all operations not governed by the plan of operations modification, the operator is subject:

(i) To the provisions of this subpart, including paragraph (d)(1) of this section, except the plan of operations content requirements, § 228.4(f)(4), and the environmental protection requirements, § 228.9;

(ii) To the plan of operations content requirements and the requirements for environmental protection set forth in the regulations in effect immediately before [Insert Effective Date of the Final Rule] (see 36 CFR 228.4(c) and (d), and 36 CFR 228.8 (2007)); and

(iii) To the terms and conditions of the preexisting approved plan of operations.

(g) *Other preexisting operations.* This subpart applies to all preexisting operations not subject to paragraphs (b) through (f) of this section that were not completed before [Insert Effective Date of the Final Rule] in accordance with the terms and conditions of any applicable notice of intent to conduct operations or approved plan of operations, or in compliance with the regulations in effect immediately before [Insert Effective Date of the Final Rule]. (See 36 CFR parts 200 to 299, revised as of July 1, 2007.)

(h) *Optional applicability.* An operator may choose to have this subpart apply to any notice of intent to conduct operations or any plan of operations submitted to the Forest Service before [Insert Effective Date of the Final Rule], where not otherwise required.

PART 261—PROHIBITIONS

5. The authority citation for part 261 continues to read as follows:

Authority: 7 U.S.C. 1011(f); 16 U.S.C. 472, 551, 620(f), 1133(c), (d)(1), 1246(i).

Subpart A—General Prohibitions

6. In § 261.2, revise the definition of ''operating plan'' and add a definition of ''residence'' to read as follows:

§ 261.2 Definitions.

* * * * *

Operating plan means the following documents, providing the document has been issued, approved, or found complete by the Forest Service: A plan of operations as provided for by 36 CFR part 228, subparts A and D, and 36 CFR part 292, subparts C and G; a supplemental plan of operations as provided for by 36 CFR part 228, subpart A, and 36 CFR part 292, subpart G; a complete bonded notice as provided for by 36 CFR part 228, subpart A; an operating plan as provided for by 36 CFR part 228, subpart C, and 36 CFR part 292, subpart G; an amended operating plan and a reclamation plan as provided for by 36 CFR part 292, subpart G; a surface use plan of operations as provided for by 36 CFR part 228, subpart E; a supplemental surface use plan of operations as provided for by 36 CFR part 228, subpart E; a permit as provided for by 36 CFR 251.15; and an operating plan and a letter of authorization as provided for by 36 CFR part 292, subpart D.

* * * * *

Residence means any structure or shelter, whether temporary or permanent, including, but not limited to, buildings, buses, cabins, campers, houses, lean-tos, mills, mobile homes, motor homes, pole barns, recreational vehicles, sheds, shops, tents and trailers, which is being used, capable of being used, or designed to be used, in whole or in part, full or part-time, as living or sleeping quarters by any person, including a guard or watchman.

* * * * *

7. In § 261.10, revise paragraphs (a), (b) and (l); and add paragraphs (p) and (q) to read as follows:

§ 261.10 Occupancy and use.

* * * * *

(a) Constructing, improving, maintaining, occupying, placing, repairing, reconstructing, retaining, or using any kind of road, trail, structure, fence, gate, enclosure, communications equipment, or other improvement on National Forest System land or facilities without a special-use authorization, contract, complete bonded notice, or approved operating plan when such authorization is required.

(b) Constructing, improving, maintaining, placing, protecting, repairing, reconstructing, retaining, or using a residence on National Forest System land unless authorized by a special-use authorization, a complete bonded notice, or an approved operating plan when such authorization is required.

* * * * *

(l) Violating any term or condition of a special-use authorization, contract, complete bonded notice, or an approved operating plan.

* * * * *

(p) Use or occupancy of National Forest System land or facilities without a complete bonded notice or an approved operating plan when such authorization is required.

(q) Storing equipment, machinery, parts, process materials, spent materials, supplies, tools and vehicles without a complete bonded notice or an approved operating plan when such authorization is required.

PART 292—NATIONAL RECREATION AREAS

Subpart D—Sawtooth National Recreation Area—Federal Lands

8. The authority citation for part 292, subpart D continues to read as follows:

Authority: Sec. 1, 30 Stat. 35, 36, as amended, 16 U.S.C. 478, 551; sec. 11, 86 Stat. 612, 16 U.S.C. 460aa–10.

9. Revise the first sentence of paragraph (a) of § 292.17 to read as follows:

§ 292.17 General provisions.

(a) The use, management and utilization of natural resources on the Federal lands within the Sawtooth National Recreation Area (SNRA) are subject to the General Management Plan and the laws, rules, and regulations pertaining to the National Forests with the exception that part 228, subpart A of this chapter does not apply to these resources. * * *

* * * * *

Subpart G—Smith River National Recreation Area

10. The authority citation for part 292, subpart G continues to read as follows:

Authority: 16 U.S.C. 460bbb *et seq.*

11. In § 292.63, revise the introductory text of paragraph (c) to read as follows:

§ 292.63 Plan of operations—supplementary requirements.

* * * * *

(c) *Minimum information on proposed operations.* In addition to the requirements of paragraph (b) of this section, a proposed plan of operations must provide the information required by § 228.4(f)(1) through (f)(4) of this chapter which includes information about the proponent and a detailed description of the proposed operation. If the operator and mining claim owner are different, the operator also must submit a copy of the authorization or agreement under which the proposed operations are to be conducted. In addition, a proposed plan of operations must include measures to meet the environmental protection requirements, including acceptable reclamation, set forth at § 228.9 of this chapter. A proposed plan of operations also must include the following:

* * * * *

12. Revise paragraph (e) of § 292.64 to read as follows:

§ 292.64 Plan of operations—approval.

* * * * *

(e) Upon completion of the review of the plan of operations, the authorized officer will ensure the minimum information required by § 292.63(c) has been addressed and, pursuant to § 228.6(c) of this chapter, notify the operator in writing whether or not the plan of operations is approved.

* * * * *

PART 293—WILDERNESS—PRIMITIVE AREAS

13. The authority citation for part 293 continues to read as follows:

Authority: 16 U.S.C. 551, 1131–1136 and 92 Stat.1649.

14. In § 293.2, revise the first sentence of the introductory text to read as follows:

§ 293.2 Objectives.

Except as otherwise provided by the regulations of this part and part 228, subpart A of this chapter, National Forest Wilderness will be so administered as to meet the public purposes of recreational, scenic, scientific, educational, conservation, and historical uses; and it also will be administered for such other purposes for which it may have been established in such a manner as to preserve and protect its wilderness character. * * *

* * * * *

15. In § 293.15, revise the second sentence of paragraph (a) to read as follows:

§ 293.15 Gathering information about resources other than minerals.

(a) * * * Prospecting for minerals or any activity for the purpose of gathering information about minerals within National Forest Wilderness is subject to the regulations set forth at part 228, subpart A of this chapter.

* * * * *

Dated: March 14, 2008.

Joel D. Holthrop,

Deputy Chief, National Forest System.

[FR Doc. E8–5746 Filed 3–24–08; 8:45 am]

BILLING CODE 3410–11–P

DEPARTMENT OF COMMERCE

National Oceanic and Atmospheric Administration

50 CFR Part 648

RIN 0648–AP60

Magnuson-Stevens Fishery Conservation and Management Act Provisions; Fisheries of the Northeastern United States; Atlantic Mackerel, Squid, and Butterfish Fisheries; Amendment 9

AGENCY: National Marine Fisheries Service (NMFS), National Oceanic and Atmospheric Administration (NOAA), Commerce.

ACTION: Notice of availability of a fishery management plan amendment; request for comments.

SUMMARY: NMFS announces that the Mid-Atlantic Fishery Management Council (Council) has submitted Amendment 9 to the Atlantic Mackerel, Squid, and Butterfish (MSB) Fishery Management Plan (FMP) (Amendment 9), incorporating the public hearing document and the Initial Regulatory Flexibility Analysis (IRFA), for review by the Secretary of Commerce and is requesting comments from the public. The goal of Amendment 9 is to remedy deficiencies in the FMP and to address other issues that have arisen since Amendment 8 to the FMP became effective in 1999. Amendment 9 would establish multi-year specifications for all four species managed under the FMP (mackerel, butterfish, *Illex* squid (*Illex*), and *Loligo* squid (*Loligo*)) for up to 3 years; extend the moratorium on entry into the *Illex* fishery, without a sunset provision; adopt biological reference points recommended by the Stock Assessment Review Committee (SARC) for *Loligo*; designate essential fish habitat (EFH) for *Loligo* eggs based on best available scientific information; and prohibit bottom trawling by MSB-permitted vessels in Lydonia and Oceanographer Canyons.

DATES: Comments must be received on or before May 27, 2008.

ADDRESSES: A final supplemental environmental impact statement (FSEIS) was prepared for Amendment 9 that describes the proposed action and other considered alternatives and provides a thorough analysis of the impacts of the proposed measures and alternatives. Copies of Amendment 9, including the FSEIS, the Regulatory Impact Review (RIR), and the Initial Regulatory Flexibility Analysis (IRFA), are available from: Daniel Furlong, Executive Director, Mid-Atlantic Fishery Management Council, Room 2115, Federal Building, 300 South New Street, Dover, DE 19904–6790. The FSEIS/RIR/IRFA is accessible via the Internet at *http://www.nero.nmfs.gov*.

Electronic Submissions: Submit all electronic public comments via the Federal e-Rulemaking portal*http://www.regulations.gov;*

- Fax: (978) 281–9135, Attn: Carrie Nordeen;
- Mail to Patricia A. Kurkul, Regional Administrator, NMFS, Northeast Regional Office, One Blackburn Drive, Gloucester, MA 01930. Mark the outside of the envelope ''Comments on MSB Amendment 9.''

Instructions: All comments received are a part of the public record and will generally be posted to *http://www.regulations.gov* without change. All Personal Identifying Information (e.g., name, address, etc.) voluntarily submitted by the commenter may be publicly accessible. Do not submit Confidential Business Information or otherwise sensitive or protected information. NMFS will accept anonymous comments. Attachments to electronic comments will be accepted in Microsoft Word, Excel, WordPerfect, or Adobe PDF formats only.

SUPPLEMENTARY INFORMATION:

Background

This amendment is needed to remedy deficiencies in the FMP and to address other issues that have arisen since Amendment 8 to the FMP (64 FR 57587, October 26, 1999) became effective in 1999. Although Amendment 8 was partially approved in 1999, NMFS noted that the amendment inadequately addressed some Magnuson-Stevens Fishery Conservation and Management Act (Magnuson-Stevens Act) requirements for Federal FMPs. Specifically, the amendment was considered deficient with respect to: Consideration of fishing gear impacts on EFH as they relate to MSB fisheries; designation of EFH for *Loligo* eggs; and the reduction of bycatch and discarding of target and non-target species in the MSB fisheries.

An earlier draft of Amendment 9, adopted by the Council on February 15, 2007, contained several management measures intended to address deficiencies in the MSB FMP that relate to discarding, especially as they affect butterfish. Specifically, these management measures would have attempted to reduce finfish discards by MSB small-mesh fisheries through mesh size increases in the directed *Loligo* fishery, removal of mesh size exemptions for the directed *Illex* fishery, and establishment of seasonal Gear Restricted Areas (GRAs). However, these specific management alternatives were developed in 2004, prior to the butterfish stock being declared overfished.

In February 2005, NMFS notified the Council that the butterfish stock was overfished and this triggered Magnuson-Stevens Act requirements to implement rebuilding measures for the stock. In response, Amendment 10 to the FMP was initiated by the Council in October 2005. Amendment 10 contains a rebuilding program for butterfish with management measures designed to reduce the fishing mortality on butterfish that occurs through discarding. Management measures that reduce the discarding of butterfish are expected to also reduce the bycatch of other finfish species in MSB fisheries. On June 13, 2007, the Council recommended that all management measures developed as part of Amendment 9 to correct deficiencies in the FMP related to bycatch of finfish, especially butterfish, be considered in Amendment 10. Accordingly, no action is proposed in Amendment 9 to address these issues. Through the development and implementation of Amendment 10, each of the measures to reduce the bycatch of finfish will be given full consideration. Additionally, Amendment 10 will include updated analyses on the effects of the alternatives and, as Amendment 10 is expected to be implemented soon after Amendment 9, no meaningful delay in addressing the bycatch deficiencies in the FMP should occur.

The final version of Amendment 9 contains alternatives that consider allowing for multi-year specifications and management measures, extending or eliminating the moratorium on entry to the directed *Illex* fishery, revising the biological reference points for *Loligo*, designating EFH for *Loligo* eggs, implementing area closures to reduce gear impacts from MSB fisheries on EFH of other federally-managed species, increasing the incidental possession limit for *Illex* vessels during a closure of the *Loligo* fishery, and requiring real-time electronic reporting via vessel monitoring systems in the *Illex* fishery. The Council held four public meetings on Amendment 9 during May 2007. Following the public comment period that ended on May 21, 2007, the Council

adopted Amendment 9 on August 6, 2007.

In Amendment 9, measures recommended by the Council would: Allow for multi-year specifications for all four managed species (mackerel, butterfish, *Illex*, and *Loligo*) for up to 3 years; extend the moratorium on entry into the *Illex* fishery, without a sunset provision; adopt biological reference points for *Loligo* recommended by the SARC; designate EFH for *Loligo* eggs based on best available scientific information; and prohibit bottom trawling by MSB-permitted vessels in Lydonia and Oceanographer Canyons.

Public comments are being solicited on Amendment 9 and its incorporated documents through the end of the comment period stated in this notice of availability. A proposed rule that would implement Amendment 9 may be published in the **Federal Register** for public comment, following NMFS's evaluation of the proposed rule under the procedures of the Magnuson-Stevens Act. Public comments on the proposed rule must be received by the end of the comment period provided in this notice of availability of Amendment 9 to be considered in the approval/disapproval decision on the amendment. All comments received by May 27, 2008, whether specifically directed to Amendment 9 or the proposed rule, will be considered in the approval/disapproval decision on Amendment 9. Comments received after that date will not be considered in the decision to approve or disapprove Amendment 9. To be considered, comments must be received by close of business on the last day of the comment period; that does not mean postmarked or otherwise transmitted by that date.

Authority: 16 U.S.C. 1801 *et seq.*

Dated: March 19, 2008.

Alan D. Risenhoover,

Director, Office of Sustainable Fisheries, National Marine Fisheries Service.

[FR Doc. E8–6001 Filed 3–24–08; 8:45 am]

BILLING CODE 3510–22–S

Notices

Federal Register

Vol. 73, No. 58

Tuesday, March 25, 2008

This section of the FEDERAL REGISTER contains documents other than rules or proposed rules that are applicable to the public. Notices of hearings and investigations, committee meetings, agency decisions and rulings, delegations of authority, filing of petitions and applications and agency statements of organization and functions are examples of documents appearing in this section.

DEPARTMENT OF AGRICULTURE

Submission for OMB Review; Comment Request

March 19, 2008.

The Department of Agriculture has submitted the following information collection requirement(s) to OMB for review and clearance under the Paperwork Reduction Act of 1995, Public Law 104–13. Comments regarding (a) Whether the collection of information is necessary for the proper performance of the functions of the agency, including whether the information will have practical utility; (b) the accuracy of the agency's estimate of burden including the validity of the methodology and assumptions used; (c) ways to enhance the quality, utility and clarity of the information to be collected; (d) ways to minimize the burden of the collection of information on those who are to respond, including through the use of appropriate automated, electronic, mechanical, or other technological collection techniques or other forms of information technology should be addressed to: Desk Officer for Agriculture, Office of Information and Regulatory Affairs, Office of Management and Budget (OMB), *OIRA_Submission@OMB.EOP.GOV* or fax (202) 395–5806 and to Departmental Clearance Office, USDA, OCIO, Mail Stop 7602, Washington, DC 20250–7602. Comments regarding these information collections are best assured of having their full effect if received within 30 days of this notification. Copies of the submission(s) may be obtained by calling (202) 720–8958.

An agency may not conduct or sponsor a collection of information unless the collection of information displays a currently valid OMB control number and the agency informs potential persons who are to respond to the collection of information that such persons are not required to respond to the collection of information unless it displays a currently valid OMB control number.

Animal and Plant Health Inspection Service

Title: Animal Care; Survey of Licensees and Registrants.

OMB Control Number: 0579–NEW.

Summary of Collection: The Laboratory Animal Welfare (AWA) (Pub. L. 89–544) enacted August 24, 1966, and amended December 24, 1970 (Pub. L. 91–579); April 22, 1976 (Pub. L. 94–279); and December 23, 1985 (Pub. L. 99–198) requires the U.S. Department of Agriculture to regulate the humane care and handling of most warm-blooded animals used for research or exhibition purposes, sold as pets or transported in commerce. A survey will be conducted of a representative sampling of all of the current licensees and registrants regarding the effectiveness of Animal Care's core business processes, including; establishing standards of care through creation and modification of regulations and policies; inspecting licensed and registered facilities to determine compliance; responding to complaints about facilities; and educating and communicating with facilities and the public. Data will be collected and analyzed by the Animal and Plant Health Inspection Service (APHIS), Program and Policy Development.

Need and Use of the Information: APHIS will collect information to show trends related to the Animal Care Program's efforts to provide quality services to its licensees and registrants. Without the information APHIS would not be able to accurately measure the enforcement of the program and still meet the provision of the Act.

Description of Respondents: Not-for-profit institutions.

Number of Respondents: 4,200.

Frequency of Responses: Reporting: On occasion.

Total Burden Hours: 672.

Animal and Plant Health Inspection Service

Title: Animal Care; Educational and Outreach Efforts.

OMB Control Number: 0579–NEW.

Summary of Collection: The Animal and Plant Health Inspection Service (APHIS), Animal Care Program (AC), conducts inspections to administer and enforce the Animal Welfare Act and the Horse Protection Act and regulations issued under those Acts. AC also conducts workshops, symposia, and meetings, and other activities to educate regulated entities and the public about these Acts and regulations. AC plans to survey participants in these activities to measure the effectiveness of its outreach and educational efforts. The surveys would be distributed to attendees following workshops, symposia, meetings, and other events.

Need and Use of the Information: APHIS will collect information to determine whether the information was helpful and how it might be improved. AC also plans to use the information collected to assess the effectiveness of its efforts and to plan improvements to activities.

Description of Respondents: Business or other for-profit; Not-for-profit institutions; Individuals or households.

Number of Respondents: 2,700.

Frequency of Responses: Reporting: On occasion.

Total Burden Hours: 675.

Animal and Plant Health Inspection Service

Title: Survey of Organizations Interested in Animal Welfare.

OMB Control Number: 0579–NEW.

Summary of Collection: The Laboratory Animal Welfare (AWA) (Pub. L. 89–544) enacted August 24, 1966, and amended December 24, 1970 (Pub. L. 91–579); April 22, 1976 (Pub. L. 94–279); and December 23, 1985 (Pub. L. 99–198) requires the U.S. Department of Agriculture to regulate the humane care and handling of most warm-blooded animals used for research or exhibition purposes, sold as pets or transported in commerce. A survey will be conducted of a representative sampling of Organizations Interested in Animal Welfare regarding the effectiveness of Animal Care's core business processes, including establishing standards of care through creation and modification of regulations and policies; inspecting licensed and registered facilities; and educating and communicating with facilities and the public. Data will be collected and analyzed by the Animal and Plant Health Inspection Service (APHIS), Program and Policy Division.

Need and Use of the Information: APHIS will collect information to understand how these interested organizations rate overall program performance, and whether there are any

gaps between their expectations and management perception.

Description of Respondents: Not-for-profit institutions.

Number of Respondents: 500.

Frequency of Responses: Reporting: On occasion.

Total Burden Hours: 80.

Animal Plant and Health Inspection Service

Title: Pine Shoot Beetle Host Material from Canada.

OMB Control Number: 0579–0257.

Summary of Collection: Under the Plant Protection Act (7 U.S.C. 7701–7772), the Secretary of Agriculture is authorized to prohibit or restrict the importation, entry, or movement of plants and plant pests to prevent the introduction of plant pests into the United States or their dissemination within the United States. The Animal Plant and Health Inspection Service (APHIS) have established restrictions on the importation of pine shoot beetle host material into the United States from Canada. Pine shoot beetle (PSB) is a pest of pine trees. It can cause damage in weak and dying trees where reproductive and immature stages of PSB occur, and in the new growth of healthy trees. PSB can damage urban ornamental trees and can cause economic losses to the timber, Christmas trees, and nursery industries.

Need and Use of the Information: APHIS will collect the information using Compliance Agreements, Written Statements, and Canadian Phytosanitary Certificates to protect the United States from the introduction of pine shoot beetle and other plant diseases.

Description of Respondents: Business or other for profit; State, Local or Tribal Government.

Number of Respondents: 2,340.

Frequency of Responses: Reporting: On occasion.

Total Burden Hours: 94.

Ruth Brown,

Departmental Information Collection Clearance Officer.

[FR Doc. E8–5940 Filed 3–24–08; 8:45 am]

BILLING CODE 3410–34–P

DEPARTMENT OF AGRICULTURE

Submission for OMB Review; Comment Request

March 20, 2008.

The Department of Agriculture has submitted the following information collection requirement(s) to OMB for review and clearance under the Paperwork Reduction Act of 1995, Public Law 104–13. Comments regarding (a) whether the collection of information is necessary for the proper performance of the functions of the agency, including whether the information will have practical utility; (b) the accuracy of the agency's estimate of burden including the validity of the methodology and assumptions used; (c) ways to enhance the quality, utility and clarity of the information to be collected; (d) ways to minimize the burden of the collection of information on those who are to respond, including through the use of appropriate automated, electronic, mechanical, or other technological collection techniques or other forms of information technology should be addressed to: Desk Officer for Agriculture, Office of Information and Regulatory Affairs, Office of Management and Budget (OMB), *OIRA_Submission@OMB.EOP.GOV* or fax (202) 395–5806 and to Departmental Clearance Office, USDA, OCIO, Mail Stop 7602, Washington, DC 20250–7602. Comments regarding these information collections are best assured of having their full effect if received within 30 days of this notification. Copies of the submission(s) may be obtained by calling (202) 720–8681.

An agency may not conduct or sponsor a collection of information unless the collection of information displays a currently valid OMB control number and the agency informs potential persons who are to respond to the collection of information that such persons are not required to respond to the collection of information unless it displays a currently valid OMB control number.

Forest Service

Title: Arctic National Wildlife Refuge Visitor Study.

OMB Control Number: 0596–NEW.

Summary of Collection: The Wilderness Act of 1964 directs that the National Wilderness Preservation System be managed to protect natural wilderness conditions and to provide outstanding opportunities for the public to find solitude or primitive and unconfined types of recreational experiences. To help meet Federal agencies' mandates related to recreation, scientists at the Aldo Leopold Wilderness Research Institute periodically monitor and report to mangers and the public, visitor use and user characteristics and visitor feedback on management actions on federal lands, including National Wildlife Refuges.

Need and Use of the Information: This study will only ask recreation visitors questions about their recreation visit, their personal demographics relevant to education and service provision, and factors that have influenced or are likely to influence their recreation visits. Agency personnel will use the collected information to ensure that visitors' recreational activities do not harm the natural resources of the refuge and that wilderness-type recreation experiences are protected. The information it provides will also be used to inform the Refuge's upcoming Comprehensive Conservation Plan revision and in the development of its Wilderness Stewardship and Public Use Management Plans.

Description of Respondents: Individuals or households.

Number of Respondents: 1,000.

Frequency of Responses: Reporting: Annually.

Total Burden Hours: 140.

Charlene Parker,

Departmental Information Collection Clearance Officer.

[FR Doc. E8–5982 Filed 3–24–08; 8:45 am]

BILLING CODE 3410–11–P

DEPARTMENT OF AGRICULTURE

Farm Service Agency

Commodity Credit Corporation

Information Collection: Long Term Contracting System (LTCS)

AGENCY: Farm Service Agency and Commodity Credit Corporation, USDA.

ACTION: Notice; request for comments.

SUMMARY: In accordance with the Paperwork Reduction Act of 1995 (PRA), the Farm Service Agency and Commodity Credit Corporation (CCC) at Kansas City Commodity Office (KCCO) are seeking comments from all interested individuals and organizations on an extension with revision of a currently approved information collection associated with the Long Term Contracting System. This collection is necessary for the procurement of agricultural commodities by KCCO for domestic feeding programs. Vendors bidding on long-term invitations complete and submit their offers on-line through the Long Term Contracting System (LTCS), which records the system date/time that the offer was submitted and ensures that the data remains secured within the system until bid opening time.

DATES: Comments on this notice must be received on or before May 27, 2008 to be assured consideration.

ADDRESSES: We invite you to submit comments on this notice. In your comment, include date and page number of this issue of the **Federal Register**. You may submit comments by any of the following methods:

E-mail: Send comments to: *khristy.baughman@kcc.usda.gov.*

Fax: (816) 926–1648.

Mail: Khristy Baughman, Chief, Business Operations Support Division, Kansas City Commodity Office (KCCO), P.O. Box 419205, Kansas City, Missouri 64141–0205.

Comments also should be sent to the Office of Information and Regulatory Affairs, Office of Management and Budget, Desk Officer for USDA, Washington, DC 20503.

FOR FURTHER INFORMATION CONTACT: Khristy Baughman, Chief, Business Operations Support Division, phone (816) 926–1200.

SUPPLEMENTARY INFORMATION:

Title: Long Term Contracting System (LTCS).

OMB Number: 0560–0249.

Type of Request: Extension with revisions.

Abstract: The Long Term Contracting System (LTCS) is a Web-based application that streamlines the bid entry and evaluation functions for Long-Term, Indefinite-Delivery, Indefinite-Quantity (IDIQ) contracts. KCCO will generally issue invitations for bids to purchase commodities for domestic feeding programs on an annual, semi-annual, quarterly, or monthly basis; however, invitations may be issued more frequently, depending on various program requirements. Bid offers are received, evaluated, and awarded within the LTCS. Interested vendors submit a price per destination for each product, along with their available capacities per delivery period/month, and their answers to specific certification questions. The information collected is processed through the LTCS bid evaluation program to determine optimal awards. KCCO will analyze the results of the bid evaluation and award contracts to the eligible, responsible and responsive bidders whose offers are most advantageous to USDA in terms of the lowest overall cost. It is necessary to collect this information in order to evaluate bids impartially. The LTCS automatically ties together monthly allocation contracts with the applicable long-term contract, and since LTCS will access real-time data, users are able to access up-to-the-minute contract award information. Vendors can access LTCS on-line prior to bid opening time to submit, modify, or withdraw their offers. The automated process of LTCS significantly reduces the chance for errors in awards and reduces recordkeeping errors associated with the former manual process of tracking contract data.

Estimate of Burden: Public reporting burden for collecting information under this notice is estimated to average 23 hours per response.

Respondents: Interested vendors.

Respondents: 20.

Estimated Number of Annual Responses per Respondent: 2.

Estimated Total Annual Burden on Respondents: 920 hours.

Comments are invited on:

(1) Whether the collection of information is necessary for the proper performance of the functions of the agency, including whether the information will have practical utility;

(2) The accuracy of the agency's estimate of burden including the validity of the methodology and assumptions used;

(3) Enhancing the quality, utility and clarity of the information collected; or

(4) Minimizing the burden of the collection of the information on those who are to respond, including through the use of appropriate automated, electronic, mechanical, or other technological collection techniques or other forms of information technology.

All responses to this notice, including names and addresses when provided, will be a matter of public record. Comments will be summarized and included in the submission for Office of Management and Budget approval.

Signed at Washington, DC, on March 19, 2008.

Teresa C. Lasseter,

Executive Vice President, Commodity Credit Corporation, Administrator, Farm Service Agency.

[FR Doc. E8–5986 Filed 3–24–08; 8:45 am]

BILLING CODE 3410–05–P

DEPARTMENT OF AGRICULTURE

Farm Service Agency

Information Collection; Transfer of Farm Records Between Counties

AGENCY: Farm Service Agency, USDA.

ACTION: Notice; request for comments.

SUMMARY: In accordance with the Paperwork Reduction Act of 1995, the Farm Service Agency (FSA) is seeking comments from interested individuals and organizations on an extension of a currently approved information collection associated with transferring of farm records from one administrative county office to another.

DATES: Comments on this notice must be received on or before May 27, 2008 to be assured consideration.

ADDRESSES: Comments concerning this notice should be addressed to Farm Service Agency, USDA, Attn: Alison Groenwoldt, Agricultural Program Specialist, Common Provisions Branch, 1400 Independence Ave., SW., Washington, DC 20250. Comments should also be sent to the Desk Officer for Agriculture, Office of Information and Regulatory Affairs, Office of Management and Budget, Washington, DC 20503. Comments also may be submitted by e-mail to: *alison.groenwoldt@wdc.usda.gov.*

FOR FURTHER INFORMATION CONTACT: Alison Groenwoldt, Agricultural Program Specialist, (202) 720–4213 and *alison.groenwoldt@wdc.usda.gov.*

SUPPLEMENTARY INFORMATION:

Description of Information Collection

Title: Transfer of Farm Records Between Counties.

OMB Control Number: 0560–0253.

Type of Request: Extension with no revision.

Abstract: Farm owners or operators may elect to transfer farm records between counties when the principal dwelling of the farm operator has changed, a change has occurred in the operation of the land, or a change has occurred that would cause the receiving administrative county office to be more accessible such as a new highway and relocation of the county office building site. The transfer of farm records is also required when an FSA county office closes. FSA County Committees from both the transferring and receiving county must approve or disapprove all proposed farm transfers. In some cases, the State Committee and/or the National Office must also approve or disapprove proposed farm transfers.

Estimate of Burden: Public reporting burden for this collection of information is estimated to average 10 minutes per response. The average travel time, which is included in the total annual burden, is estimated to be 1 hour per respondent.

Type of Respondents: Owners and operators.

Estimated Number of Respondents: 25,000.

Estimated Number of Responses per Respondent: 1.

Estimated Total Annual Burden on Respondents: 29,175 hours.

Comment is invited on:

(1) Whether the collection of information is necessary for the proper

performance of the functions of the agency, including whether the information will have practical utility;

(2) The accuracy of the agency's estimate of the burden of the proposed collection of information, including the validity of the methodology and assumptions used;

(3) Ways to enhance the quality, utility and clarity of the information to be collected; or

(4) Ways to minimize the burden of the collection of the information on those who are respond through the use of appropriate automated, electronic or mechanical, collection techniques; or other forms of information technology.

All comments received in response to this notice, including names and addresses when provided, will be a matter of public record. Comments will be summarized and included in the submission for Office of Management and Budget Approval.

Signed at Washington, DC, on March 19, 2008.

Teresa C. Lasseter,

Administrator, Farm Service Agency.

[FR Doc. E8–5984 Filed 3–24–08; 8:45 am]

BILLING CODE 3410–05–P

DEPARTMENT OF AGRICULTURE

Forest Service

Ravalli County Resource Advisory Committee

AGENCY: Forest Service, USDA.

ACTION: Notice of meeting.

SUMMARY: The Ravalli County Resource Advisory Committee will be meeting to review 2007 projects, hold a short public forum (question and answer session), and presentation on Fuel treatment Effects on Fire Behavior. The meeting is being held pursuant to the authorities in the Federal Advisory Committee Act (Public Law 92–463) and under the Secure Rural Schools and Community Self-Determination Act of 2000 (Pub. L. 106–393). The meeting is open to the public.

DATES: The meeting will be held on March 25, 2008, 6:30 p.m.

ADDRESSES: The meeting will be held at the Bitterroot National Forest Supervisor Office, 1801 N First, Hamilton, Montana. Send written comments to Daniel Ritter, District Ranger, Stevensville Ranger District, 88 Main Street, Stevensville, MT 59870, by facsimile (406) 777–7423, or electronically to *dritter@fs.fed.us*.

FOR FURTHER INFORMATION CONTACT: Daniel Ritter, Stevensville District Ranger and Designated Federal Officer, phone: (406) 777–5461.

Dated: March 14, 2008.

Barry Paulson,

Deputy Forest Supervisor.

[FR Doc. E8–5854 Filed 3–24–08; 8:45 am]

BILLING CODE 3410–11–M

DEPARTMENT OF COMMERCE

Economic Development Administration

Notice of Petitions by Firms for Determination of Eligibility To Apply for Trade Adjustment Assistance

AGENCY: Economic Development Administration, Department of Commerce.

ACTION: Notice and opportunity for public comment.

Pursuant to section 251 of the Trade Act of 1974 (19 U.S.C. 2341 *et seq.*), the Economic Development Administration (EDA) has received petitions for certification of eligibility to apply for Trade Adjustment Assistance from the firms listed below. EDA has initiated separate investigations to determine whether increased imports into the United States of articles like or directly competitive with those produced by each firm contributed importantly to the total or partial separation of the firm's workers, or threat.

LIST OF PETITIONS RECEIVED BY EDA FOR CERTIFICATION OF ELIGIBILITY TO APPLY FOR TRADE ADJUSTMENT MARCH 1, 2008 THROUGH MARCH 31, 2008

Firm	Address	Date accepted for filing	Products
Penn Scale Manufacturing Company, Inc.	150 West Berks Street Philadelphia, PA 19122.	1/31/08	Manufactures scales and scoops.
Briggs Rainbow Buildings, Inc.	P.O. Box 308, Ft. Gibson, OK 74434	3/18/08	Steel Building and Roofing.
Prairie Authority, LLC dba Yuletideexpressions.com.	111 9th Street, SE, Cooperstown, ND 58425.	2/20/08	Light Manufacturing.
Pro-Pak Industries, Inc.	1125 Ford Street, Maumee, OH 43537	2/29/08	Manufactures rigid boxes and cartons of paper or paperboard.
Graham Stamping Company	1700 Broadway Company, PO box 578, Wheatland, PA 16161.	3/18/08	Manufactures metal stamping products.
Lines Unlimited, Inc.	715 Park Center Drive, Kernersville, NC 27284.	3/18/08	Manufactures material includes wood and metal.
Johnston Textiles, Inc.	300 Colin Powell Parkway Phenix City, AL 36869.	3/18/08	Manufactures diverse line of both decorative and technical textile products.
Jaycat, Inc. dba Carlson Products	4601 N. Tyler Rd., Maize, KS 67101–8734.	1/24/08	Doors and Related Products.
Vinylex Corporation	2636 Byington-Solway Rd., Knoxville, TN 37931.	1/31/08	Manufactures and markets custom thermoplastic profile extrusions.
Hyde Tools, Inc.	54 Eastford Road, Southbridge, MA 01550.	2/28/08	Manufactures household tools and parts for painting, wall covering, flooring drywall, masonry, maintenance and Surface preparation.
Delaware Valley Custom Marble (Glenmar Mfg).	4 Briar Drive, West Grove, PA 19390	2/19/08	Manufactures cultured marble products primarily for residential bath use.
Kelvin International, Corp.	12650 McManus Blvd, Newport News, VA 23602.	2/19/08	Manufactures cryogenic equipment.
Midbrook, Inc.	2080 Brooklyn Road, Jackson, MI 49203	12/14/08	Manufactures industrial cleaning for bottles, auto parts and other items.

LIST OF PETITIONS RECEIVED BY EDA FOR CERTIFICATION OF ELIGIBILITY TO APPLY FOR TRADE ADJUSTMENT MARCH 1, 2008 THROUGH MARCH 31, 2008—Continued

Firm	Address	Date accepted for filing	Products
Cherek Machine & Tool Co., Inc.	835 Sherman Avenue, Hamden, Connecticut 06514.	2/8/08	Produces small machine parts and tooling.
Moon Woodturning, Inc.	118 W. Watson Street, Pacific, MO 63069.	1/30/08	Custom Wood Turning Product.
Maryland Plastics, Inc.	251 East Central Ave., Federalsburg, MD 21632.	1/15/08	Manufactures plastic consumer house wares and cutlery.
Marshall Engineering Product Company, LLC.	3056 Walker Ridge Drive, Suite C, Grand Rapids, MI 49544.	12/17/08	Centrifugal and turbine pumps and similar steam and hydronic heating equipment.
Centerline Die & Engineering, LLC	28661 Van Dyke Ave, Warren, MI 48093	2/22/08	Tools and die.
The Green Company	15550 W. 109th St., Lenexa, KS 66219	1/25/08	Emblematic jewelry, awards and gifts.
LDC, Inc.	30R Houghton St, Providence, RI	2/26/08	Products form sterling silver, 14KT gold and base metals.
Universal Forest Products	26200 Nowell Road, Thornton, CA 95686.	1/31/08	Lumber remanufacturer and distributor.
H & H Propeller Shop, Inc.	Zero Essex Street, Salem, MA 01970	1/30/08	Wide range of marine propulsion products and services.
Hiawatha Rubber Co.	1700 67th Avenue N., Minneapolis, MN 55430.	3/6/08	Designs and manufactures products such as rubber rollers, roller covers Diaphragms, seals, gaskets and Related molded rubber products.
Fantasy Diamond Corp.	1550 West Central, Chicago, IL 60607	3/3/08	Manufactures pendants, earings, bracelets and rings out of gold, diamonds and other precious stones.
Flux Studios, Inc.	4001 Ravenswood Ave, Chicago, IL 60613.	2/29/08	Stainless steel and bronze decorative floor and wall tiles.
Simplomatic Manufacturing Company	816 N. Kostner Avenue, Chicago, IL 60651.	3/3/08	Stamped metal and injection molded plastic components of mechanical seals, bearings and turbochargers.
Lynn Halfmann	H.C. 34–Box 187, Midland, TX 79706	2/19/08	Combed and carded cotton for textile manufacturing.
R.L. Stowe Mills, Inc.	100 N. Main Street, Belmont, NC 28012	2/29/08	Manufactures and markets ring spun combed and open end cotton yarn, twisted yarn, corespun yarns, dyed and mercerized yarns.

Any party having a substantial interest in these proceedings may request a public hearing on the matter. A written request for a hearing must be submitted to the Office of Performance Evaluation, Room 7009, Economic Development Administration, U.S. Department of Commerce, Washington, DC 20230, no later than ten (10) calendar days following publication of this notice. Please follow the procedures set forth in section 315.9 of EDA's final rule (71 FR 56704) for procedures for requesting a public hearing. The Catalog of Federal Domestic Assistance official program number and title of the program under which these petitions are submitted is 11.313, Trade Adjustment Assistance.

Dated: March 19, 2008.

William P. Kittredge,

Program Officer for TAA.

[FR Doc. E8–6036 Filed 3–24–08; 8:45 am]

BILLING CODE 3510–24–P

DEPARTMENT OF COMMERCE

International Trade Administration

International Trade Administration Mission Statement

AGENCY: Department of Commerce, ITA.

ACTION: Notice.

Mission Statement

Aerospace, Defense and Security Trade Mission to Athens, Greece October 7–10, 2008.

Mission Description: The United States Department of Commerce, International Trade Administration, U.S. Commercial Service is organizing an Aerospace, Defense and Security Trade Mission, October 7–10, 2008, to Athens, Greece, with an optional stop in Tel Aviv, Israel, October 5–6, 2008. The mission will coincide with Defendory 2008 in Athens, where U.S. participants will meet with both Greek and Turkish business contacts. Defendory is one of the world's leading exhibitions for sea, land and air defense products and technologies. The trade mission will target a broad range of aerospace, defense, and safety and security products and services, and will consist of customized one-on-one appointments at the Defendory exhibit site between U.S. participants and Greek customers/business partners, as well as Turkish customers/business partners. Delegation members may take advantage of the optional stop in Israel before the mission starts in Greece.

The goal of the mission will be to match participating U.S. companies with pre-screened agents, distributors, representatives, licensees, buyers, and joint venture partners, and where appropriate, arrange for appointments with government officials, traditionally large purchasers of products and services in the highlighted sectors. Consumers in Greece, Turkey and Israel have a strong affinity for U.S. products and services in these sectors.

Commercial Setting

Greece: Greece's allocation of gross domestic product (GDP) for defense is the highest in the European Union (EU).

A partner in the North Atlantic Treaty Organization (NATO), Greece is continuing to modernize the Hellenic Armed Forces and shift its force structure toward smaller, more flexible formations. To achieve this, the government has announced plans to spend more than $3 billion by 2011, in addition to the $8 billion it has spent in recent years on defense equipment. Greece provides U.S. defense firms with excellent opportunities as it pursues a number of high-priority programs, including new frigates, helicopters, missiles, fighters and ''new generation'' trainer aircraft.

The necessity for more and better security has resulted in increased market potential associated with the upgrading of Greek airport and port security, to be funded from the Greek national budget, EU funds, the Interregional Plan, and public-private partnerships. Opportunities for U.S. firms exist in a number of airport and port safety and security projects. The Greek civil aviation structure consists of 82 commercial airports, of which 38 are under the jurisdiction of the Hellenic Civil Aviation Authority (HCAA). According to the HCAA, total airport traffic in Greece through 2006 reached 40 million travelers, and is expected to increase to more than 50 million by 2010. Greece has 123 cargo/passenger ports that handle passenger ships, cruise ships and cargo. The main ports, Piraeus and Thessaloniki, serve as a gateway to the Balkans.

Significant developments that will influence demand for port safety and security include equipment upgrades associated with the Container Security Initiative (CSI) and/or International Ship and Port Facility Security Code (ISPS), as well as the HCAA's plans for security upgrades. The ISPS Code defines mandatory measures to strengthen maritime security and prevent acts of terrorism against shipping and port facilities.

One offshoot of these requirements is the Greek Ministry of Merchant Marine's plans to announce, by the end of 2008, an international tender worth more than $496 million for the design, implementation and operation of a fully integrated security system for 12 Greek national ports. The system will include surface, underwater and perimeter security according to the ISPS Code. A second tender will follow to cover the remaining Greek ports. U.S. companies enjoy an excellent reputation for high-quality equipment, advanced technology, superior technical proficiency, and expertise in the design and execution of large-scale security projects. Innovative security products are in high demand.

Turkey: Located at the crossroads of Europe, Asia and the Middle East, Turkey is prepared to defend its national interest along many different fronts. Turkey maintains the second largest land force in NATO and second largest fleet of F–16s, second only to the United States. Turkey's role in NATO—including support of security and humanitarian operations, as well as regional crisis management—is one of the cornerstones of the nation's relationship with the United States. The FY 2007 Ministry of Defense (MOD) budget resulted in a 12% increase compared to FY 2006 and reached 13.2 billion in New Turkish Liras, constituting 2.1% of the gross national product (GNP). This does not include spending by either the Ministry of Interior's Gendarme or the Under secretariat for Defense Industry procurements. Potential major procurements in 2008 are expected to include frigates, submarines, coastal surveillance radars, tactical wheeled vehicles, satellites, and air defense systems.

The safety and security market in Turkey is new and developing rapidly. The market size was estimated to be $3 billion in 2007—approximately $2.5 billion of which was devoted to physical security services such as private security guards, patrols, and training. Biometrics, closed circuit systems (CCTV), access detectors, and X-ray equipment are among the best prospects for equipment.

Israel: In the homeland security, defense and aerospace sectors, U.S. exporters are the preferred suppliers for Israeli companies. The attractive dollar exchange rate, sophisticated technologies, cultural affinities, and strong political and commercial bonds between the United States and Israel are the main factors why Israeli manufacturers look to do business with U.S. firms. Israel's security-awareness and high level of preparedness are the driving forces for the development of the country's cutting edge security industry, which in 2007 produced an estimated $4.5 billion in equipment and services.

Israel is an attractive market for U.S. manufacturers of high-end equipment and of components that can be integrated into Israeli systems. The import market, estimated at $510 million has a 70% U.S. market share. U.S. security equipment is often used for sensitive applications, by high-security industries and for key infrastructures and installations. The market offers good opportunities for U.S. exporters of high-quality detection and screening systems, CCTV, sensors, biometric solutions, x-ray systems, and non-lethal weapons. For U.S. exporters of defense systems and components, Israel offers excellent market potential. Estimated total market size is $3.5 billion, with imports totaling $2.5 billion. Over 70 percent of the $5.3 billion local production is exported. Import of defense items from the United States amounts to approximately $2 billion. Many procurements are made with Foreign Military Financing (FMF), giving a distinct advantage to U.S. manufacturers, as FMF requirements call for 51-percent U.S. content in purchased equipment.

Israel has a large and modern air force, successful international and regional airlines, hundreds of registered general aviation and sport aircraft, and an advanced aerospace industry. Israeli defense companies have developed and manufactured combat aircraft, business jets, missiles, unmanned aerial vehicles, space launchers, and satellites. Over the years, Israel has become a world leader in many aerospace fields.

Mission Goals: The trade mission's goal is to provide market entry or increased sales in the mission markets for U.S. aerospace, defense and/or safety and security firms, as well as first-hand market information and access to potential business partners.

Mission Scenario: The delegation will spend five days in Athens. In cooperation with CS Ankara and CS Istanbul, Turkish distributors, agents and other appropriate business partners will be invited to meet with the mission participants in Athens. Mission participants may participate in an optional mission stop in Tel Aviv, Israel, where the CS will arrange one-on-one appointments with potential Israeli customers and/or business partners and provide briefings on the Israeli market. Companies opting to stop first in Israel will pay Gold Key Service fees directly to CS Tel Aviv.

In Greece, the U.S. Commercial Service will provide a market briefing highlighting opportunities in the aerospace, defense and/or safety and security sectors; schedule one-on-one appointments at the Defendory show site with potential Greek and Turkish business partners; participate in the Defendory hospitality events to introduce participants to key business and industry officials; provide interpreters as needed; and provide hotel/airport transfers for the mission participants.

Criteria for Participation

- Relevance of the company's business line to the mission's scope and goals.
- Potential for business in the selected markets.
- Timeliness of the company's completed application, participation agreement, and payment of the mission participation fee.
- Provision of adequate information on the company's products and/or services and communication of the company's primary objectives to facilitate appropriate matching with potential business partners.
- Certification that the firm's products and/or services are manufactured or produced in the United States or if manufactured/produced outside of the United States, the product/service should be marketed under the name of a U.S. firm and have U.S. content representing at least 51 percent of the value of the finished good or service.

Any partisan political activities of an applicant, including political contributions, will be entirely irrelevant to the selection process. Recruitment will be conducted on a first come-first served basis and will close approximately six weeks prior to the mission. The mission participation fee will be U.S. $3,000 per company. The rates for the Israel option are $735 for the first day of appointments and $360 for the second day of appointments. The participation fee does not include the cost of travel, lodging, and most meals. Participation is open to the first 10 qualified U.S. companies. Applications received after the recruitment deadline will be considered only if space and scheduling constraints permit.

Contact Information

Aerospace/Defense:

Diane Mooney, Aerospace and Defense Project Manager, U.S. Commercial Service, Seattle, Washington 98121, Phone: 206–553–5615, ext. 236, *dmooney@mail.doc.gov.*

Safety and Security:

Suzette Nickle, Safety and Security Project Manager, U.S. Commercial Service, 1625 Broadway, Suite 680, Denver, CO 80202, Phone: 303–844–6623 ext. 16, *suzette.nickle@mail.doc.gov.*

Nancy Hesser, Phone: 202–482–4663

Nancy Hesser,

Manager, Commercial Service Trade Missions, U.S. Commercial Service, International Trade Administration.

[FR Doc. E8–5934 Filed 3–24–08; 8:45 am]

BILLING CODE 3510–25–P

DEPARTMENT OF COMMERCE

International Trade Administration

[A–549–821]

Notice of Extension of Time Limit for Preliminary Results of Antidumping Duty Administrative Review: Polyethylene Retail Carrier Bags from Thailand

AGENCY: Import Administration, International Trade Administration, Department of Commerce.

EFFECTIVE DATE: March 25, 2008.

FOR FURTHER INFORMATION CONTACT: Dmitry Vladimirov, AD/CVD Operations, Office 5, Import Administration, International Trade Administration, U.S. Department of Commerce, 14th Street and Constitution Avenue, NW, Washington, DC 20230; telephone: (202) 482–0665.

Background

The Department of Commerce (the Department) published an antidumping duty order on polyethylene retail carrier bags from Thailand on August 9, 2004. See *Antidumping Duty Order: Polyethylene Retail Carrier Bags From Thailand*, 69 FR 48204 (August 9, 2004). On August 2, 2007, the Department published a notice of opportunity to request an administrative review of the antidumping duty order on polyethylene retail carrier bags from Thailand for the period August 1, 2006, through July 31, 2007. See *Antidumping or Countervailing Duty Order, Finding, or Suspended Investigation; Opportunity to Request Administrative Review*, 72 FR 42383 (August 2, 2007). On August 31, 2007, KYD, Inc., a U.S. importer of the subject merchandise, requested that the Department conduct an administrative review with respect to King Pac Industrial Co., Ltd. On August 31, 2007, The Polyethylene Retail Carrier Bag Committee and its individual members, Hilex Poly Co., LLC and Superbag Corporation, the petitioner in this proceeding, also requested that the Department conduct an administrative review with respect to King Pac Industrial Co., Ltd., Kor Ratthanakit Co., Ltd., Master Packaging Co., Ltd., Naraipak Co., Ltd., and Polyplast (Thailand) Co., Ltd.

On September 25, 2007, the Department published a notice of initiation of an administrative review of the antidumping duty order on polyethylene retail carrier bags from Thailand for the period August 1, 2006, through July 31, 2007. See *Initiation of Antidumping and Countervailing Duty Administrative Reviews and Request for Revocation in Part*, 72 FR 54428, 54429 (September 25, 2007). On December 6, 2007, the Department decided to limit its examination of requested companies to King Pac Industrial Co., Ltd., Naraipak Co., Ltd., and Polyplast (Thailand) Co., Ltd., pursuant to section 777A(c)(2)(B) of the Tariff Act of 1930, as amended. See Memorandum to Laurie Parkhill entitled ''Polyethylene Retail Carrier Bags from Thailand – Respondent Selection,'' dated December 6, 2006. The preliminary results of this administrative review are currently due no later than May 2, 2008.

Extension of Time Limit for Preliminary Results

Section 751(a)(3)(A) of the Tariff Act of 1930, as amended (the Act), requires the Department to make a preliminary determination within 245 days after the last day of the anniversary month of an order for which a review is requested and a final determination within 120 days after the date on which the preliminary determination is published in the **Federal Register**. If it is not practicable to complete the review within these time periods, section 751(a)(3)(A) of the Act allows the Department to extend the time limit for the preliminary determination to a maximum of 365 days after the last day of the anniversary month.

We determine that it is not practicable to complete the preliminary results of this review by the current deadline of May 2, 2008. We received a below–cost allegation and are currently conducting a below–cost investigation for one of the respondents, which will require us to analyze and incorporate the information from recently filed submissions. Further, we require additional time to verify information submitted by certain respondents in this administrative review.

Therefore, in accordance with section 751(a)(3)(A) of the Act and 19 CFR 351.213(h)(2), we are extending the time period for issuing the preliminary results of this review by 60 days to July 1, 2008.

This notice is published in accordance with sections 751(a)(3)(A) and 777 (i)(1) of the Act.

Dated: March 18, 2008.

Stephen J. Claeys,

Deputy Assistant Secretary for Import Administration.

[FR Doc. E8–6062 Filed 3–24–08; 8:45 am]

BILLING CODE 3510–DS–S

DEPARTMENT OF COMMERCE

International Trade Administration

[C–475–819]

Certain Pasta from Italy: Extension of Time Limit for Preliminary Results of the Countervailing Duty Administrative Review

AGENCY: Import Administration, International Trade Administration, Department of Commerce.

EFFECTIVE DATE: March 25, 2008

FOR FURTHER INFORMATION CONTACT: Andrew McAllister or Brandon Farlander, AD/CVD Operations, Office 1, Import Administration, International Trade Administration, U.S. Department of Commerce, 14th Street and Constitution Avenue, NW, Washington, DC 20230; telephone: (202) 482–1174 and (202) 482–0182, respectively.

Background

On July 24, 1996, the Department of Commerce (''the Department'') published a countervailing duty order on certain pasta (''pasta'' or ''subject merchandise'') from Italy. *See Notice of Countervailing Duty Order and Amended Final Affirmative Countervailing Duty Determination: Certain Pasta From Italy*, 61 FR 38544 (July 24, 1996). On July 3, 2007, the Department published a notice of ''Opportunity to Request Administrative Review'' of this countervailing duty order for calendar year 2006, the period of review (''POR''). *See Antidumping or Countervailing Duty Order, Finding, or Suspended Investigation; Opportunity to Request Administrative Review*, 72 FR 36420 (July 3, 2007). In accordance with 19 CFR 351.221(c)(1)(i), we published a notice of initiation of the review on August 24, 2007, for the 2006 POR. *See Initiation of Antidumping and Countervailing Duty Administrative Reviews and Request for Revocation in Part*, 72 FR 48613 (August 24, 2007). The preliminary results for this review are currently due no later than April 1, 2008.

Extension of Time Limits for Preliminary Results

Section 751(a)(3)(A) of the Tariff Act of 1930, as amended (''the Act''), requires the Department to issue the preliminary results of an administrative review within 245 days after the last day of the anniversary month of an order for which a review is requested and the final results of review within 120 days after the date on which the preliminary results are published. If it is not practicable to complete the review within the time period, section 751(a)(3)(A) of the Act allows the Department to extend these deadlines to a maximum of 365 days and 180 days, respectively.

We are awaiting supplemental information from the respondents and the Government of Italy in this review. Because the Department will require additional time to review and analyze this supplemental information and may issue further supplemental questionnaires, it is not practicable to complete this review within the originally anticipated time limit (*i.e.*, by April 1, 2008). Therefore, the Department is extending the time limit for completion of the preliminary results to not later than July 30, 2008, in accordance with section 751(a)(3)(A) of the Act.

We are issuing and publishing this notice in accordance with sections 751(a)(1) and 777(i)(1) of the Act.

Dated: March 19, 2008.

Stephen J. Claeys,

Deputy Assistant Secretary for Import Administration.

[FR Doc. E8–6053 Filed 3–24–08; 8:45 am]

BILLING CODE 3510–DS–S

DEPARTMENT OF COMMERCE

International Trade Administration

[A–552–801]

Certain Frozen Fish Fillets from the Socialist Republic of Vietnam: Extension of Time Limits for the Preliminary Results of the New Shipper Reviews

AGENCY: Import Administration, International Trade Administration, Department of Commerce.

EFFECTIVE DATE: March 25, 2008.

FOR FURTHER INFORMATION CONTACT: Javier Barrientos and Matthew Renkey, AD/CVD Operations, Office 9, Import Administration, International Trade Administration, U.S. Department of Commerce, 14th Street and Constitution Avenue, NW., Washington, DC 20230; telephone: (202) 482–2243 and (202) 482–2312, respectively.

Background

On October 9, 2007, the Department published a notice of initiation of new shipper reviews of certain frozen fish fillets from Vietnam covering the period August 1, 2006, through July 31, 2007. *See Certain Frozen Fish Fillets from the Socialist Republic of Vietnam: Initiation of Antidumping Duty New Shipper Reviews,* 72 FR 57296 (October 9, 2007). The preliminary results of these new shipper reviews are currently due no later than March 24, 2008.

Statutory Time Limits

Section 751(a)(2)(B)(iv) of the Tariff Act of 1930, as amended (the ''Act''), provides that the Department will issue the preliminary results of a new shipper review of an antidumping duty order within 180 days after the day on which the review was initiated. *See also* 19 CFR 351.214(i)(1). The Act further provides that the Department may extend that 180-day period to 300 days if it determines that the case is extraordinarily complicated. *See* 19 CFR 351.214(i)(2).

Extension of Time Limit of Preliminary Results

The Department determines that these new shipper reviews involve extraordinarily complicated methodological issues such as the use of intermediate input methodology, potential affiliation issues, and the evaluation of the *bona fide* nature of each company's sales. Therefore, in accordance with section 751(a)(2)(B)(iv) of the Act and 19 CFR 351.214(i)(2), the Department is extending the time limit for these preliminary results by 120 days, until no later than July 22, 2008. The final results continue to be due 90 days after the publication of the preliminary results.

We are issuing and publishing this notice in accordance with sections 751(a)(2)(B)(iv) and 777(i) of the Act.

Dated: March 14, 2008.

Stephen J. Claeys,

Deputy Assistant Secretary for Import Administration.

[FR Doc. E8–6081 Filed 3–24–08; 8:45 am]

BILLING CODE 3510–DS–P

DEPARTMENT OF COMMERCE

International Trade Administration

Mission Statement

AGENCY: International Trade Administration, Department of Commerce.

ACTION: Notice

Mission Statement

Medical Equipment Trade Mission to the Philippines, Thailand, and Malaysia, August 4–12, 2008

Mission Description: The United States Department of Commerce, International Trade Administration, U.S. Commercial Service is organizing a Medical Equipment Trade Mission to the Philippines, Thailand, and Malaysia

from August 4 to 12, 2008. The mission provides an opportunity for U.S. firms to tap into lucrative, fast growing markets for U.S. medical equipment. The medical equipment sector in these countries is growing at an average 13 percent rate, and the United States remains a major source of medical equipment, with an average 28 percent market share. At each stop, the mission will include country briefings; individual business meetings with prospective agents, distributors, partners, and end-users; site visits; and networking functions with private companies and local government officials.

Commercial Setting—Philippines: The Philippines medical industry is almost totally dependent on imports, and medical tourism to the Philippines continues to grow, offering many opportunities for U.S. sellers of medical equipment and instruments. Several hospitals are improving facilities and adapting new technologies to address demand from foreigners and returning residents. The United States claims an estimated 25 percent of the Philippines' $177 million import market for medical equipment, making it second only to China as the top supplier. U.S.-trained Filipino doctors prefer the high technology of American equipment, which justifies their higher costs. Best prospects include electromedical equipment, ultrasonic scanning machines, X-ray and radiation equipment, dialysis instruments and apparatus, and medical and surgical instruments.

Thailand: The market for medical devices in Thailand grew by an estimated 15 percent in 2007. About 75 percent of medical devices in Thailand are imported, and the U.S. share is about 29 percent. Market growth in the next few years (2008 to 2010) will continue to derive mainly from the need to upgrade health care facilities and replace medical devices. Hospitals are promoting high-end equipment and specializations to attract more patients. Hospital equipment is imported and distributed by independent agents and/or distributors who also handle marketing, customs clearance, and product registration/import authorization. Best prospects include heart valves and artificial blood vessels, disposable diagnostic test kits, quick diagnostic testing devices, respiratory devices and oxygen therapy, rehabilitation equipment and accessories, orthopedic and implant devices and accessories, minimum invasive surgical devices, and neurosurgical and other surgical devices.

Malaysia: The $1.4 billion Malaysian medical devices market is projected to grow at a rate of 10 percent in 2008. Ninety percent of medical devices are imported, and the U.S. import market share is 22 percent. An increasing patient population and focus on health care cost containment and preventative therapies influence demand for medical devices for cardiovascular, orthopedic, respiratory, ophthalmic, neurological, disposable, and infection control applications. The increasing senior population and modern lifestyle diseases are expected to boost demand for more affordable quality drugs and equipment. Plans for constructing new and replacement hospitals are under way. Promotion of health tourism is robust and includes developing health services in areas where Malaysia offers a comparative advantage, such as spas and cosmetic services. The Ministry of Tourism has unveiled a health tourism portal, and the government's ninth Malaysia Plan, for 2006–2010, includes proposals for four significant new health care programs. Best prospects include electromedical equipment, orthopedic appliances, and diagnostic and therapeutic radiation devices.

Mission Goals: The mission will showcase U.S. medical equipment and technology to improve health care delivery in each country. The objective of the mission is to facilitate market entry and/or increase sales for U.S. suppliers of medical devices, as well as provide firsthand market information and access to potential business partners.

Mission Scenario: The Commercial Service in Manila, Bangkok, and Kuala Lumpur will provide country briefings; customized, pre-arranged appointments with prospective partners, distributors, and end-users; meetings with appropriate host government agencies; and networking events with local officials and company representatives. The focus of the mission will be to match U.S. companies with pre-screened agents, distributors, buyers, and representatives in these markets.

Criteria for Participation

- Relevance of a company's business to mission goals.
- Potential for business in the selected markets for the company.
- Company must supply adequate information on its products/services, and on its market objectives, in order to facilitate appropriate matching with potential business partners.
- Company's product or service must be either produced in the United States, or, if not, marketed under the name of a U.S. firm and have at least 51 percent U.S. content of the value of the finished product or service.
- Timeliness of a company's signed application and participation agreement, including a participation fee of $3,500. This fee does not include travel, lodging, and most meals.

Recruitment will be conducted on a first come-first served basis and will close July 11, 2008. Applications received after July 11 will be considered only if space and scheduling permit.

Contact: Jennifer Loffredo, Global Health Care Technologies Team Leader. E-mail: *Jennifer.Loffredo@mail.doc.gov.* Telephone: 248–975–9600.

Nancy Hesser,

Manager, Commercial Service Trade Missions, U.S. Commercial Service, International Trade Administration.

[FR Doc. E8–5933 Filed 3–24–08; 8:45 am]

BILLING CODE 3510–25–P

DEPARTMENT OF COMMERCE

International Trade Administration

[A–570–918]

Preliminary Determination of Sales at Less Than Fair Value: Steel Wire Garment Hangers from the People's Republic of China

AGENCY: Import Administration, International Trade Administration, Department of Commerce.

EFFECTIVE DATE: March 25, 2008.

SUMMARY: We preliminarily determine that steel wire garment hangers (''hangers'') from the People's Republic of China (''PRC'') are being, or are likely to be, sold in the United States at less than fair value (''LTFV''), as provided in section 733 of the Tariff Act of 1930, as amended (''the Act''). The estimated margins of sales at LTFV are shown in the ''Preliminary Determination'' section of this notice.

FOR FURTHER INFORMATION CONTACT: Irene Gorelik or Julia Hancock, AD/CVD Operations, Office 9, Import Administration, International Trade Administration, U.S. Department of Commerce, 14th Street and Constitution Avenue, NW, Washington, DC, 20230; telephone: (202) 482–6905 or 482–1394, respectively.

SUPPLEMENTAL INFORMATION:

Initiation

On July 31, 2007, the Department of Commerce (''Department'') received a petition on imports of hangers from the PRC filed in proper form by M&B Metal Products (''Petitioner'') on behalf of the domestic industry and workers producing hangers. This investigation

was initiated on September 10, 2007. *See Steel Wire Garment Hangers from the People's Republic of China: Initiation of Antidumping Duty Investigation*, 72 FR 52855 (September 17, 2007) (''*Initiation Notice*''). Additionally, in the *Initiation Notice*, the Department notified parties of the application process by which exporters and producers may obtain separate–rate status in non–market economy (''NME'') investigations. *See Id.* 72 FR 52858–59. The process requires exporters and producers to submit a separate–rate status application. *See id.*; *Policy Bulletin 05.1: Separate–Rates Practice and Application of Combination Rates in Antidumping Investigations involving Non–Market Economy Countries*, (April 5, 2005), (''*Policy Bulletin 05.1*'') available at *http://ia.ita.doc.gov*. However, the standard for eligibility for a separate rate (which requires a firm to demonstrate an absence of both *de jure* and *de facto* governmental control over its export activities) has not changed.

On October 5, 2007, the United States International Trade Commission (''ITC'') issued its affirmative preliminary determination that there is a reasonable indication that an industry in the United States is materially injured or threatened with material injury by reason of imports from the PRC of steel wire garment hangers. The ITC's determination was published in the **Federal Register** on October 18, 2007. *See* Investigation No. 731–TA–1123 (Preliminary), *Steel Wire Garment Hangers from China*, 72 FR 59112 (October 18, 2007).

Period of Investigation

The period of investigation (''POI'') is January 1, 2007, through June 30, 2007. This period corresponds to the two most recent fiscal quarters prior to the month of the filing of the petition (July 31, 2007). *See* 19 CFR 351.204(b)(1).

Scope Comments

The Department also set aside a 20–day period from the publication of the initiation for all interested parties to raise issues regarding product coverage. *See Initiation Notice*, 72 FR at 52855. The Department did not receive any comments from interested parties regarding product coverage during the 20–day period and subsequently, has not changed the scope as set forth in the *Initiation Notice*.

Respondent Selection and Quantity and Value

In the *Initiation Notice*, the Department stated that in recent NME investigations, it has been the Department's practice to request quantity and value information from all known exporters identified in the petition for purposes of mandatory respondent selection. *See Certain Steel Nails from the People's Republic of China and United Arab Emirates: Initiation of Antidumping Duty Investigation*, 72 FR at 38816, 38821 (July 16, 2007); *Initiation of Antidumping Duty Investigation: Certain Pneumatic Off–The-Road Tires from the People's Republic of China*, 72 FR 43591, 43595 (August 6, 2007). However, for this investigation, because the Harmonized Tariff Schedule of the United States (''HTSUS'') subheading 7326.20.00.20, as discussed below in the ''Scope of the Investigation,'' provided comprehensive coverage of imports of steel wire garment hangers, the Department selected respondents in this investigation based on U.S. Customs and Border Protection (''CBP'') data of U.S. imports under HTSUS subheading 7326.20.0020 from the POI.

On October 16, 2007, the Department selected Shanghai Wells Hanger Co., Ltd., (''Shanghai Wells'') and Shaoxing Gangyuan Metal Manufactured Co., Ltd. (''Shaoxing Gangyuan'') as mandatory respondents in this investigation. *See Memorandum to James C. Doyle, Director, AD/CVD Operations, Office 9, from Irene Gorelik and Julia Hancock, International Trade Compliance Analysts, AD/CVD Operations, Office 9: Selection of Respondents for the Antidumping Investigation of Steel Wire Garment Hangers from the People's Republic of China*, (October 16, 2007) (''*Respondent Selection Memo*'').

Surrogate Country Comments

On October 2, 2007, the Department determined that India, Indonesia, Sri Lanka, the Philippines, and Egypt are countries comparable to the PRC in terms of economic development. *See Memorandum from Ron Lorentzen, Director, Office of Policy, to Alex Villanueva, Program Manager, China/NME Group, Office 9: Antidumping Investigation of Steel Wire Garment Hangers from the People's Republic of China (PRC): Request for a List of Surrogate Countries*, (October 2, 2007) (''*Surrogate Country List*'').

On October 17, 2007, the Department requested comments on the selection of a surrogate country from the interested parties in this investigation. On December 31, 2007, Petitioner filed an extension request to submit surrogate country and factor valuation comments, which the Department extended until January 7, 2008. On January 7, 2008, Petitioner submitted surrogate country comments requesting that India be selected as the appropriate surrogate country. No other interested parties commented on the selection of a surrogate country. For a detailed discussion of the selection of the surrogate country, *see* ''Surrogate Country'' section below.

Surrogate Value Comments

On January 7, 2008, Petitioner, Shanghai Wells, and Shaoxing Gangyuan submitted surrogate factor valuation comments. On January 17, 2008, Shaoxing Gangyuan submitted a rebuttal to Petitioner's surrogate factor value comments.

Separate–Rates Applications

Between October 9, 2007, and November 9, 2007, we received separate–rate applications from sixteen companies.[1] *See* the ''Separate Rates'' section below for the full discussion of the treatment of the separate–rate applicants.

Questionnaires

On September 10, 2007, the Department requested comments from all interested parties on proposed product characteristics and model match criteria to be used in the designation of control numbers (''CONNUMs'') to be assigned to the merchandise under consideration. The Department received comments from Petitioner and Shaoxing Gangyuan. On October 16, 2007, the Department issued its section A portion of the NME questionnaire. On October 17, 2007, the Department issued its sections C and D portions of the NME questionnaire with product characteristics and model match criteria used in the designation of CONNUMs and assigned to the merchandise under consideration. The Department issued supplemental questionnaires to Shanghai Wells and Shaoxing Gangyuan between November 2007 and February 2008, and received responses between December 2007 and March 2008.

On November 27, 2007, the Department conducted a domestic plant tour of Petitioner's facility in Leeds,

[1] The following companies filed separate-rate applications: Shaoxing Meideli Metal Hanger Co., Ltd.; Shaoxing Dingli Metal Clotheshorse Co., Ltd.; Shaoxing Liangbao Metal Manufactured Co., Ltd.; Shaoxing Zhongbao Metal Manufactured Co., Ltd.; Shaoxing Tongzhou Metal Manufactured Co., Ltd.; Shaoxing Andrew Metal Manufactured Co., Ltd.; Jiangyin Hongji Metal Products Co., Ltd.; Shangyu Baoxiang Metal Manufactured Co., Ltd.; Zhejiang Lucky Cloud Hanger Co., Ltd.; Pu Jiang County Command Metal Products Co.; Shaoxing Shunji Metal Clotheshorse Co., Ltd.; Ningbo Dasheng Hanger Ind. Co., Ltd.; Jiaxing Boyi Medical Device Co., Ltd.; Yiwu Ao-Si Metal Products Co., Ltd.; Shaoxing Guochao Metallic Products Co., Ltd.; and Tianjin Hongtong Metal Manufacture Co., Ltd., (collectively, ''SRAs'').

Alabama. *See Memorandum to the File from Irene Gorelik, International Trade Compliance Analyst, Office 9, Import Administration*, (November 28, 2007).

Postponement of Preliminary Determination

On December 31, 2007, Petitioner filed a request to postpone the issuance of the preliminary determination by 50 days. On January 8, 2008, the Department informed all interested parties of its intent to postpone the preliminary determination pursuant to section 733(c)(1)(B)(i) of the Act by fifty days to March 18, 2008. On January 11, 2008, the Department published a postponement of the preliminary antidumping duty determination on hangers from the PRC. *See Steel Wire Garment Hangers from the People's Republic of China: Notice of Postponement of Preliminary Determination of Antidumping Duty Investigation*, 73 FR 2004 (January 11, 2008) (''*Prelim Extension FR*'').[2]

Scope of Investigation

The merchandise that is subject to this investigation is steel wire garment hangers, fabricated from carbon steel wire, whether or not galvanized or painted, whether or not coated with latex or epoxy or similar gripping materials, and/or whether or not fashioned with paper covers or capes (with or without printing) and/or nonslip features such as saddles or tubes. These products may also be referred to by a commercial designation, such as shirt, suit, strut, caped, or latex (industrial) hangers. Specifically excluded from the scope of this investigation are wooden, plastic, and other garment hangers that are classified under separate subheadings of the HTSUS. The products subject to this investigation are currently classified under HTSUS subheading 7326.20.0020. Although the HTSUS subheading is provided for convenience and customs purposes, the written description of the merchandise is dispositive.

Non–Market-Economy Country

For purposes of initiation, Petitioner submitted LTFV analyses for the PRC as an NME country. *See Initiation Notice*, 72 FR at 52857. The Department considers the PRC to be an NME country. In accordance with section 771(18)(C)(i) of the Act, any determination that a foreign country is an NME country shall remain in effect until revoked by the administering authority. *See Preliminary Determination of Sales at Less Than Fair Value and Postponement of Final Determination: Coated Free Sheet Paper from the People's Republic of China*, 72 FR 30758, 30760 (June 4, 2007), unchanged in *Final Determination of Sales at Less Than Fair Value: Coated Free Sheet Paper from the People's Republic of China*, 72 FR 60632 (October 25, 2007). In accordance with section 771(18)(C)(i) of the Act, any determination that a foreign country is an NME country shall remain in effect until revoked by the administering authority. No party has challenged the designation of the PRC as an NME country in this investigation. Therefore, we continue to treat the PRC as an NME country for purposes of this preliminary determination.

Surrogate Country

When the Department investigates imports from an NME, section 773(c)(1) of the Act directs it to base normal value (''NV''), in most circumstances, on the NME producer's factors of production (''FOP'') valued in a surrogate market–economy country or countries considered to be appropriate by the Department. In accordance with section 773(c)(4) of the Act, in valuing the FOPs, the Department shall utilize, to the extent possible, the prices or costs of FOPs in one or more market–economy countries that are at a level of economic development comparable to that of the NME country and are significant producers of comparable merchandise. The sources of the surrogate values we have used in this investigation are discussed under the ''Normal Value'' section below.

The Department's practice is explained in *Policy Bulletin 04.1*,[3] which states that ''Per capita GNI[4] is the primary basis for determining economic comparability.'' The Department considers the five countries identified in its *Surrogate Country List* as ''equally comparable in terms of economic development.'' *Id*. Thus, we find that India, Sri Lanka, Egypt, Indonesia, and Philippines are all at an economic level of development equally comparable to that of the PRC.

Second, *Policy Bulletin 04.1* provides some guidance on identifying comparable merchandise and selecting a producer of comparable merchandise. Specifically, the *Policy Bulletin 04.1* explains that ''in cases where identical merchandise is not produced, the team must determine if other merchandise that is comparable is produced.'' *See Policy Bulletin 04.1* at 2. The Department obtained export data for steel wire garment hangers from the World Trade Atlas (''WTA'') and found that none of the countries on the *Surrogate Country List* produce or export identical merchandise. Thus, the Department determined which countries on the *Surrogate Country List* were producers of comparable merchandise.

The Department obtained worldwide export data for steel wire products.[5] Specifically, we reviewed export data from the WTA for the HTS heading 7326.20, ''Other Articles of Iron/Steel Wire,'' for 2006. The Department found that, of the countries provided in the *Surrogate Country List*, all five countries were exporters of comparable merchandise: steel wire products. Thus, all countries on the *Surrogate Country List* are considered as appropriate surrogates because each exported comparable merchandise.

The *Policy Bulletin 04.1* also provides some guidance on identifying significant producers of comparable merchandise and selecting a producer of comparable merchandise. Further analysis was required to determine whether any of the countries which produce comparable merchandise are significant' producers of that comparable merchandise. The data we obtained shows that, in 2006, worldwide exports for HTS 7326.20 from: India were approximately 4,884,412 kg; Indonesia were approximately 1,830,965 kg; Sri Lanka were approximately 244,223 kg; the Philippines were approximately 371,379 kg; and Egypt[6] were approximately 89,850 kg. We note that although Sri Lanka, the Philippines, and Egypt are exporters of steel wire products, the quantities they exported do not qualify them as significant producers of the comparable merchandise.[7] Thus, the Philippines, Sri Lanka, and Egypt are

[2] In the *Prelim Extension FR*, the Department incorrectly stated in footnote 2 that ''190 days from the initiation date is actually March 17, 2008.'' The Department intended to state that 190 days from the initiation date of September 10, 2007, is March 18, 2008.

[3] *See Policy Bulletin 04.1: Non-Market Economy Surrogate Country Selection Process*, (March 1, 2004), (''*Policy Bulletin 04.1*'') available at *http://ia.ita.doc.gov*.

[4] GNI stands for gross national income, which comprises GDP plus net receipts of primary income (compensation of employees and property income) from nonresident sources. *See, e.g., http://www.finfacts.com/ biz10/ globalworldincomepercapita.htm*.

[5] Because the Department was unable to find production data, we relied on export data as a substitute for overall production data in this case.

[6] The worldwide export data from Egypt was obtained from the Global Trade Atlas since Egyptian export statistics are not available on WTA.

[7] We note that, of the total export quantities obtained from world trade data, the Philippines, Sri Lanka, and Egypt account for five percent, three percent, and one percent, respectively, of the total exports of comparable merchandise of all five countries on the *Surrogate Country List*.

not being considered as appropriate surrogate countries. Additionally, although Indonesia appears to be a significant producer of comparable merchandise, India's percentage of exports of comparable merchandise at 66 percent of the total exports of the five countries far exceeds that of Indonesia's 25 percent. Finally, we have reliable data from India on the record that we can use to value the FOPs. Petitioner and both selected respondents submitted surrogate values using Indian sources, suggesting greater availability of appropriate surrogate value data in India.

As noted above, the Department only received surrogate country comments from Petitioners, who favored selection of India. The Department is preliminarily selecting India as the surrogate country on the basis that: (1) it is at a similar level of economic development pursuant to section 773(c)(4) of the Act; (2) it is a significant producer of comparable merchandise; and (3) we have reliable data from India that we can use to value the FOPs. Thus, we have calculated NV using Indian prices when available and appropriate to value Shanghai Wells' and Shaoxing Gangyuan's FOPs. *See Memorandum to the File from Julia Hancock, through Alex Villanueva, Program Manager, AD/CVD Operations, Office 9, and James C. Doyle, Director, AD/CVD Operations, Office 9: Steel Wire Garment Hangers from the People's Republic of China: Surrogate Values for the Preliminary Determination*, (March 18, 2008) (''*Surrogate Value Memorandum*''). In accordance with 19 CFR 351.301(c)(3)(i), for the final determination in an antidumping investigation, interested parties may submit publicly available information to value the FOPs within 40 days after the date of publication of the preliminary determination.[8]

Affiliations

Section 771(33) of the Act, provides that:

The following persons shall be considered to be 'affiliated' or 'affiliated persons':

(A) Members of a family, including brothers and sisters (whether by the whole or half blood), spouse, ancestors, and lineal descendants.

(B) Any officer or director of an organization and such organization.

(C) Partners.

(D) Employer and employee.

(E) Any person directly or indirectly owning, controlling, or holding with power to vote, 5 percent or more of the outstanding voting stock or shares of any organization and such organization.

(F) Two or more persons directly or indirectly controlling, controlled by, or under common control with, any person.

(G) Any person who controls any other person and such other person.

Additionally, section 771(33) of the Act stipulates that: ''For purposes of this paragraph, a person shall be considered to control another person if the person is legally or operationally in a position to exercise restraint or direction over the other person.''

Based on the evidence on the record in this investigation and based on the evidence presented in Shaoxing Gangyuan's questionnaire responses, we preliminarily find that Shaoxing Gangyuan is affiliated with Shaoxing Andrew Metal Manufactured Co., Ltd. (''Andrew''), Shaoxing Tongzhou Metal Manufactured Co., Ltd. (''Tongzhou''), and a fourth company,[9] pursuant to sections 771(33)(E), (F), and (G) of the Act, based on ownership and common control. Furthermore, we find that they should be considered as a single entity for purposes of this investigation. *See* 19 CFR 351.401(f). In addition to being affiliated, they have production facilities for similar or identical products that would not require substantial retooling and there is a significant potential for manipulation of production based on the level of common ownership and control, shared management, and an intertwining of business operations. *See* 19 CFR 351.401(f)(1) and (2). For a detailed discussion of this issue, *see Shaoxing Metal Companies Affiliation Memo*.

Because the Department finds that Shaoxing Gangyuan and its affiliates are a single entity, the Department is utilizing the integrated FOP database Shaoxing Gangyuan provided for purposes of the preliminary determination, which includes the FOPs from Andrew, Tongzhou, and the fourth company. Hereinafter, Shaoxing Gangyuan and its affiliates will be referred to as the ''Shaoxing Metal Companies.''

Separate Rates

Additionally, in the *Initiation Notice*, the Department notified parties of the application process by which exporters and producers may obtain separate–rate status in NME investigations. *See Initiation Notice*. The process requires exporters and producers to submit a separate–rate status application. *See also Policy Bulletin 05.1: Separate–Rates Practice and Application of Combination Rates in Antidumping Investigations involving Non–Market Economy Countries*, (April 5, 2005), (''*Policy Bulletin 05.1*'') available at *http://ia.ita.doc.gov*.[10] However, the standard for eligibility for a separate rate (which requires a firm to demonstrate an absence of both *de jure* and *de facto* governmental control over its export activities) has not changed.

In proceedings involving NME countries, the Department has a rebuttable presumption that all companies within the country are subject to government control and thus should be assessed a single antidumping duty rate. It is the Department's policy to assign all exporters of merchandise subject to investigation in an NME country this single rate unless an exporter can demonstrate that it is sufficiently independent so as to be entitled to a separate rate. Exporters can demonstrate this independence through

[8] In accordance with 19 CFR 351.301(c)(1), for the final determination of this investigation, interested parties may submit factual information to rebut, clarify, or correct factual information submitted by an interested party less than ten days before, on, or after, the applicable deadline for submission of such factual information. However, the Department notes that 19 CFR 351.301(c)(1) permits new information only insofar as it rebuts, clarifies, or corrects information recently placed on the record. The Department generally cannot accept the submission of additional, previously absent-from-the-record alternative surrogate value information pursuant to 19 CFR 351.301(c)(1). *See Glycine from the People's Republic of China: Final Results of Antidumping Duty Administrative Review and Final Rescission, in Part*, 72 FR 58809 (October 17, 2007) and accompanying Issues and Decision Memorandum at Comment 2.

[9] The identity of this company is business proprietary information; for further discussion of this company, *see Memorandum to Alex Villanueva, Program Manager, AD/CVD Operations, Office 9, from Julia Hancock, Senior Case Analyst, AD/CVD Operations, Office 9: Preliminary Determination in the Antidumping Duty Investigation of Steel Wire Garment Hangers from the People's Republic of China: Affiliations Memo of Shaoxing Gangyuan and its Affiliates*, (March 18, 2008)(''*Shaoxing Metal Companies Affiliation Memo*'').

[10] The *Policy Bulletin 05.1*, states: ''{w}hile continuing the practice of assigning separate rates only to exporters, all separate rates that the Department will now assign in its NME investigations will be specific to those producers that supplied the exporter during the period of investigation. Note, however, that one rate is calculated for the exporter and all of the producers which supplied merchandise under consideration to it during the period of investigation. This practice applies both to mandatory respondents receiving an individually calculated separate rate as well as the pool of non-investigated firms receiving the weighted-average of the individually calculated rates. This practice is referred to as the application of ≥combination rates≥ because such rates apply to specific combinations of exporters and one or more producers. The cash-deposit rate assigned to an exporter will apply only to merchandise both exported by the firm in question and produced by a firm that supplied the exporter during the period of investigation.'' *See Policy Bulletin 05.1* at 6.

the absence of both *de jure* and *de facto* governmental control over export activities. As discussed fully below, all but one of the SRAs have provided company–specific information to demonstrate that they operate independently of *de jure* and *de facto* government control and, therefore, satisfy the standards for the assignment of a separate rate.[11]

The Department analyzes each entity exporting the merchandise under consideration under a test arising from the *Final Determination of Sales at Less Than Fair Value: Sparklers From the People's Republic of China*, 56 FR 20588 (May 6, 1991) (''Sparklers''), as further developed in *Notice of Final Determination of Sales at Less Than Fair Value: Silicon Carbide From the People's Republic of China*, 59 FR 22585 (May 2, 1994) (''Silicon Carbide''). However, if the Department determines that a company is wholly foreign–owned or located in a market economy, then a separate rate analysis is not necessary to determine whether it is independent from government control.

A. Separate Rate Recipients

Wholly Foreign–Owned

One separate rate company, Jiangyin Hongji Metal Products Co., Ltd. (''Hongji'') reported that it is wholly owned by individuals or companies located in a market economy in its separate–rate application. *See* ''PRELIMINARY DETERMINATION'' section below for the company marked with a '' ^ '' designating this company as wholly foreign–owned. Therefore, because it is wholly foreign–owned, and we have no evidence indicating that it is under the control of the PRC, a separate rates analysis is not necessary to determine whether this company is independent from government control. *See Notice of Final Determination of Sales at Less Than Fair Value: Creatine Monohydrate From the People's Republic of China*, 64 FR 71104–71105 (December 20, 1999) (where the respondent was wholly foreign–owned, and thus, qualified for a separate rate). Accordingly, we have preliminarily granted a separate rate to this company.

Joint Ventures Between Chinese and Foreign Companies or Wholly Chinese–Owned Companies

Fifteen of the SRAs in this investigation stated that they are either joint ventures between Chinese and foreign companies or are wholly Chinese–owned companies. Therefore, the Department must analyze whether these companies can demonstrate the absence of both *de jure* and *de facto* governmental control over export activities.

a. Absence of De Jure Control

The Department considers the following *de jure* criteria in determining whether an individual company may be granted a separate rate: (1) An absence of restrictive stipulations associated with an individual exporter's business and export licenses; (2) any legislative enactments decentralizing control of companies; and (3) other formal measures by the government decentralizing control of companies. See Sparklers, 56 FR at 20589.

The evidence provided by the PRC SR Recipients supports a preliminary finding of de jure absence of governmental control based on the following: (1) an absence of restrictive stipulations associated with the individual exporters' business and export licenses; (2) there are applicable legislative enactments decentralizing control of the companies; and (3) and there are formal measures by the government decentralizing control of companies. *See*, *e.g.*, Pu Jiang County Command Metal Products Co., Ltd., November 9, 2007, Separate Rate Application.

b. Absence of De Facto Control

Typically the Department considers four factors in evaluating whether each respondent is subject to *de facto* governmental control of its export functions: (1) whether the export prices (''EP'') are set by or are subject to the approval of a governmental agency; (2) whether the respondent has authority to negotiate and sign contracts and other agreements; (3) whether the respondent has autonomy from the government in making decisions regarding the selection of management; and (4) whether the respondent retains the proceeds of its export sales and makes independent decisions regarding disposition of profits or financing of losses. *See Silicon Carbide*, 59 FR at 22587; *see also Notice of Final Determination of Sales at Less Than Fair Value: Furfuryl Alcohol From the People's Republic of China*, 60 FR 22544, 22545 & n.3 (May 8, 1995). The Department has determined that an analysis of *de facto* control is critical in determining whether respondents are, in fact, subject to a degree of governmental control which would preclude the Department from assigning separate rates. The evidence provided by the PRC SR Recipients supports a preliminary finding of *de facto* absence of governmental control based on the following: (1) whether the EP is set by or are subject to the approval of a governmental agency; (2) whether the respondent has authority to negotiate and sign contracts and other agreements; (3) whether the respondent has autonomy from the government in making decisions regarding the selection of management; and (4) whether the respondent retains the proceeds of its export sales and makes independent decisions regarding disposition of profits or financing of losses. *See*, *e.g.*, Shaoxing Meideli Metal Hanger Co., Ltd., October 9, 2007, Separate–Rate Application.

The evidence placed on the record of this investigation by the PRC SR Recipients demonstrate an absence of *de jure* and *de facto* government control with respect to each of the exporters' exports of the merchandise under investigation, in accordance with the criteria identified in *Sparklers* and *Silicon Carbide*. *See* ''PRELIMINARY DETERMINATION'' section below for companies marked with an '' * '' designating these companies as joint ventures between Chinese and foreign companies or wholly Chinese–owned companies that have demonstrated their eligibility for a separate rate.

Companies Not Receiving a Separate Rate

The Department is not granting a separate rate to the following SRA for the reasons discussed below.

Tianjin Hongtong Metal Manufacture Co., Ltd. (''Hongtong'') was unable to demonstrate that it had sales of the merchandise under consideration to the United States. Upon reviewing Hongtong's separate–rates application and supplemental questionnaire response, we noted that Hongtong's reported U.S. sales were in fact sales to another PRC entity, an export agent that invoiced and received payment for merchandise sold to the United States. In NME proceedings, we do not examine sales prices between NME entities (*e.g.*, transaction prices between an NME producer of the merchandise under consideration and the NME exporter of the merchandise under consideration) as NME countries are presumed to ''not operate on market principles of cost or pricing structures so that the sales of merchandise in such countr{ies} do not reflect the fair value of the merchandise.'' *See* section 771(18) of the Act. Accordingly, non–exporting NME producers of the merchandise under consideration are not eligible for examination as respondents. Based on Hongtong's description of the sales chain for the merchandise it produces,

[11] All separate-rate applicants receiving a separate rate are hereby referred to collectively as the ''PRC SR Recipients.''

Hongtong was a producer and not an exporter of the merchandise under consideration during the POI and, therefore, is not eligible to receive a separate rate in this investigation.

Companies Receiving a Separate Rate

The Department has determined that PRC SR recipients[12] applying for a separate rate in this segment of the proceeding have demonstrated an absence of government control both in law and in fact and is, therefore, according separate rate status to these applicants. Additionally, because the Department has collapsed Andrew and Tongzhou, two of the SRAs with Shaoxing Gangyuan, their separate rate analysis will be conducted in conjunction with the analysis conducted for Shaoxing Gangyuan.

PRC–Wide Entity

Information on the record of this investigation indicates that there are numerous producers/exporters of hangers in the PRC. As stated above, the Department collected CBP data to select respondents based on imports of hangers classified under HTSUS subheading 7326.20.00.20. *See Respondent Selection Memo*. The Department selected Shanghai Wells and the Shaoxing Metal Companies as mandatory respondents. Additionally, as stated above, sixteen companies, including the two companies collapsed with Shaoxing Gangyuan filed separate–rates applications, resulting in eighteen companies that are actively participating in this investigation. Upon receipt of the separate–rates applications, we examined the disaggregated[13] CBP data and determined that a significant number of exporters of hangers from the PRC during the POI were neither selected for review nor filed separate–rate applications, thus not active participants in this investigation. Based upon our knowledge of the volume of imports of the merchandise under consideration from the PRC from CBP data, the volume of imports of the merchandise under consideration from Shanghai Wells, the Shaoxing Metal Companies, and the SRAs, while accounting for a significant share, do not account for all imports into the United States. Therefore, the Department preliminarily determines that there were PRC producers/exporters of the merchandise under consideration during the POI that did not apply for separate rates, thus establishing that there is a PRC–Wide entity with respect to this product. Therefore, consistent with the presumption of government control, we preliminarily determine that some exports of subject merchandise are from entities under the control of the PRC–Wide entity. The Department's presumption that these entries were subject to government control has not been rebutted, thus we preliminarily determine that these entries should be assessed a single PRC–Wide antidumping duty rate. As the single PRC–Wide rate, we have taken the simple average of: (A) the weighted–average of the calculated rates of Shaoxing Metal Companies and Shanghai Wells and (B) the simple average of the petition rates that fell within the range of Shaoxing Metal Companies' and Shanghai Wells' individual transaction margins. Accordingly, we determine that the single rate applicable to the PRC–Wide entity is 221.05 %. The PRC–Wide rate applies to all entries of the merchandise under investigation with the exception of those entries from Shanghai Wells, the Shaoxing Metal Companies, and the PRC SR Recipients.

Separate–Rate Calculation

The Department received timely and complete separate–rates applications from the PRC SR Recipients, who are all exporters of hangers from the PRC, which were not selected as mandatory respondents in this investigation. Through the evidence in their applications, with the exception of Hongtong, these companies have demonstrated their eligibility for a separate rate, as discussed above in the ''Separate Rates'' section and in the *Memorandum to the File, from Irene Gorelik, Senior Case Analyst, AD/CVD Operations, Office 9: Preliminary Determination in the Antidumping Duty Investigation of Steel Wire Garment Hangers from the People's Republic of China: Calculation of the Separate Rate Weighted–Average Margin*, (March 18, 2008). Consistent with the Department's practice, as the separate rate, we have established a weighted–average margin for the PRC SR Recipients based on the rates we calculated for Shanghai Wells and the Shaoxing Metal Companies, excluding any rates that are zero, *de minimis*, or based entirely on adverse facts available (''AFA''). *See*, *e.g.*, *Preliminary Determination of Sales at Less Than Fair Value and Partial Affirmative Determination of Critical Circumstances: Certain Polyester Staple Fiber from the People's Republic of China*, 71 FR 77373, 77377 (December 26, 2006) (''*PSF*'') unchanged in Final Determination. Companies receiving this rate are identified by name in the ''Suspension of Liquidation'' section of this notice.

Date of Sale

Section 351.401(i) of the Department's regulations states that, ''in identifying the date of sale of the merchandise under consideration or foreign like product, the Secretary normally will use the date of invoice, as recorded in the exporter or producer's records kept in the normal course of business.'' However, the Secretary may use a date other than the date of invoice if the Secretary is satisfied that a different date better reflects the date on which the exporter or producer establishes the material terms of sale. *See* 19 CFR 351.401(i); *See also Allied Tube & Conduit Corp. v. United States*, 132 F. Supp. 2d 1087, 1090–1092 (CIT 2001) (''*Allied Tube*''). The date of sale is generally the date on which the parties agree upon all substantive terms of the sale. This normally includes the price, quantity, delivery terms and payment terms. *See Id.*, at 77377. In order to simplify the determination of date of sale for both the respondents and the Department and in accordance with 19 CFR 351.401(i), the date of sale will normally be the date of the invoice, as recorded in the exporter's or producer's records kept in the ordinary course of business, unless the Department is satisfied that the exporter or producer establishes the material terms of sale on some other date. For instance, in *Notice of Final Determination of Sales at Less Than Fair Value: Polyvinyl Alcohol From Taiwan*, 61 FR 14064, 14067–14068 (March 29, 1996), the Department used the date of the purchase order as the date of sale because the terms of sale were established at that point.

After examining the questionnaire responses and the sales documentation that Shanghai Wells and the Shaoxing Metal Companies placed on the record, we preliminarily determine that the invoice date is the most appropriate date of sale for Shanghai Wells and the Shaoxing Metal Companies.

[12] These companies are: Shaoxing Meideli Metal Hanger Co., Ltd., Shaoxing Dingli Metal Clotheshorse Co., Ltd., Shaoxing Liangbao Metal Manufactured Co., Ltd., Shaoxing Zhongbao Metal Manufactured Co., Ltd., Shangyu Baoxiang Metal Manufactured Co., Ltd., Zhejiang Lucky Cloud Hanger Co., Ltd., Pu Jiang County Command Metal Products Co., Shaoxing Shunji Metal Clotheshorse Co., Ltd., Ningbo Dasheng Hanger Ind. Co., Ltd., Jiaxing Boyi Medical Device Co., Ltd., Yiwu Ao-Si Metal Products Co., Ltd., and Shaoxing Guochao Metallic Products Co., Ltd. The Department also included Hongji in this list, though a separate rate analysis was not required (as stated above).

[13] In this case, disaggregated data refers to exporter names in the CBP data, which appear to be duplicates albeit not combined for purposes of respondent selection. As a result, the CBP data showed many companies exported hangers to the United States during the POI, although the actual number of companies may be lower due to duplicate names in the CBP data.

In *Allied Tube*, the Court of International Trade (''CIT'') found that a ''party seeking to establish a date of sale other than invoice date bears the burden of producing sufficient evidence to satisfy' the Department that a different date better reflects the date on which the exporter or producer establishes the material terms of sale.''' *Allied Tube* 132 F. Supp. 2d at 1092.

Here, the Department preliminarily determines that based on the information on the record, the invoice date is the appropriate date of sale for Shanghai Wells and the Shaoxing Metal Companies. Each respondent has provided various examples of material changes to their purchase orders during the POI. *See* Shanghai Wells' Supplemental Section C Questionnaire Response, dated February 7, 2008 and Shaoxing Metal Companies's Supplemental Section C Questionnaire Response, dated February 1, 2008.

Fair Value Comparisons

To determine whether sales of steel wire garment hangers to the United States by Shanghai Wells and the Shaoxing Metal Companies were made at less than fair value, we compared the EP to NV, as described in the ''U.S. Price,'' and ''Normal Value'' sections of this notice. We compared NV to weighted–average EPs in accordance with section 777A(d)(1) of the Act.

U.S. Price

A. EP

In accordance with section 772(a) of the Act, we based the U.S. price for the Shaoxing Metal Companies's sales and certain Shanghai Wells' sales on EP because the first sale to an unaffiliated purchaser was made prior to importation, and the use of constructed export price (''CEP'') was not otherwise warranted. In accordance with section 772(c) of the Act, we calculated EP by deducting, where applicable, foreign inland freight, foreign brokerage and handling, international freight, and rebates from the gross unit price. We based these movement expenses on surrogate values where a PRC company provided the service and was paid in Renminbi. For details regarding our EP calculation, *see Memorandum to the File from Irene Gorelik, Senior Case Analyst: Program Analysis for the Preliminary Determination of Antidumping Duty Investigation of Steel Wire Garment Hangers from the People's Republic of China: Shanghai Wells Hanger Co., Ltd.*, (March 18, 2008) (''*Shanghai Wells Analysis Memorandum*'') and *Shaoxing Metal Companies Analysis Memorandum*.

B. CEP

In accordance with section 772(b) of the Act, we based the U.S. price for certain Shanghai Wells' sales on CEP because these sales were made by Shanghai Wells' U.S. affiliate.[14] In accordance with section 772(c)(2)(A) of the Act, we calculated CEP by deducting, where applicable, the following expenses from the gross unit price charged to the first unaffiliated customer in the United States: marine insurance, discounts, rebates, billing adjustments, foreign movement expenses, and international freight, and United States movement expenses, including brokerage and handling. Further, in accordance with section 772(d)(1) of the Act and 19 CFR 351.402(b), where appropriate, we deducted from the starting price the following selling expenses associated with economic activities occurring in the United States: credit expenses, warranty expenses, other direct selling expenses, and indirect selling expenses. In addition, pursuant to section 772(d)(3) of the Act, we made an adjustment to the starting price for CEP profit. We based movement expenses on either surrogate values, actual expenses, or an average of the two. For details regarding our CEP calculations, *see Shanghai Wells Analysis Memorandum*.

Normal Value

Section 773(c)(1) of the Act provides that the Department shall determine the NV using a FOP methodology if the merchandise is exported from an NME and the information does not permit the calculation of NV using home–market prices, third–country prices, or constructed value under section 773(a) of the Act. The Department bases NV on the FOP because the presence of government controls on various aspects of non–market economies renders price comparisons and the calculation of production costs invalid under the Department's normal methodologies. *See e.g.*, *Preliminary Determination of Sales at Less Than Fair Value, Affirmative Critical Circumstances, In Part, and Postponement of Final Determination: Certain Lined Paper Products from the People's Republic of China*, 71 FR 19695 (April 17, 2006) (''*CLPP*'') unchanged in Final Determination.

As the basis for NV, both Shanghai Wells and the Shaoxing Metal Companies provided FOPs used in each stage for processing steel wire garment hangers, *i.e.*, from the drawing of the steel wire to completion of the final product. Additionally, both Shanghai Wells and the Shaoxing Metal Companies reported that they are integrated producers because both respondents draw the steel wire from the steel wire rod and provided the FOP information used in this production stage.

Consistent with section 773(c)(1)(B) of the Act, it is the Department's practice to value the FOPs that a respondent uses to produce the merchandise under consideration. *See Final Determination of Sales at Less Than Fair Value: Certain Frozen and Canned Warmwater Shrimp From the People's Republic of China*, 69 FR 70997 (December 8, 2004) and accompanying Issues and Decision Memorandum at Comment 9(E). If the NME respondent is an integrated producer, we take into account the factors utilized in each stage of the production process. For example, in a previous case, one shrimp respondent was a fully integrated firm, and the Department valued both the farming and processing FOPs because this company bore all the costs related to growing the shrimp. *See id*.

In this case, we are valuing those inputs reported by Shanghai Wells and the Shaoxing Metal Companies that were used to produce the main input to the processing stage (steel wire) when calculating NV, regardless of whether the FOPs were produced or purchased by the respondents.

Factor Valuation Methodology

In accordance with section 773(c) of the Act, we calculated NV based on FOP data reported by Shanghai Wells and the Shaoxing Metal Companies for the POI. To calculate NV, we multiplied the reported per–unit factor–consumption rates by publicly available surrogate values (except as discussed below). In selecting the surrogate values, we considered the quality, specificity, and contemporaneity of the data. As appropriate, we adjusted input prices by

[14] Shanghai Wells reported these sales as ''indirect export price'' (''IEP''). However, the Department finds that these IEP sales are, in fact, CEP sales because Shanghai Wells reported that its affiliate in the United States performed sales functions such as: sales negotiation, issuance of invoices and receipt of payment from the ultimate U.S. customer during the POI. Moreover, Shanghai Wells reported expenses incurred in the United States that are normally deducted from the gross unit price. *See* Shanghai Wells Questionnaire Responses dated November 13, 2007, December 7, 2007, and March 4, 2008; *see also Glycine From the People's Republic of China: Preliminary Results of Antidumping Duty Administrative Review and Preliminary Rescission, in Part*, 72 FR 18457 (April 12, 2007) unchanged in Final Results (where the Department stated that ''we based U.S. price for certain sales on CEP in accordance with section 772(b) of the Act, because sales were made by Nantong Donchang's U.S. affiliate, Wavort, Inc. {''Wavort''} to unaffiliated purchasers.''); *AK Steel Corp., et al v. United States*, 226 F.3d 1361 (Fed.Cir. 2000).

including freight costs to make them delivered prices. Specifically, we added to Indian import surrogate values a surrogate freight cost using the shorter of the reported distance from the domestic supplier to the factory or the distance from the nearest seaport to the factory where appropriate. This adjustment is in accordance with the Court of Appeals for the Federal Circuit's decision in *Sigma Corp. v. United States*, 117 F.3d 1401, 1407–08 (Fed. Cir. 1997). A detailed description of all surrogate values used for respondents can be found in the *Surrogate Value Memorandum* and company–specific analysis memoranda.

For this preliminary determination, in accordance with the Department's practice, we used data from the Indian Import Statistics in order to calculate surrogate values for the mandatory respondents' FOPs (direct materials, energy, and packing materials). In selecting the best available information for valuing FOPs in accordance with section 773(c)(1) of the Act, the Department's practice is to select, to the extent practicable, surrogate values which are non–export average values, most contemporaneous with the POI, product–specific, and tax–exclusive. *See, e.g., Notice of Preliminary Determination of Sales at Less Than Fair Value, Negative Preliminary Determination of Critical Circumstances and Postponement of Final Determination: Certain Frozen and Canned Warmwater Shrimp From the Socialist Republic of Vietnam*, 69 FR 42672, 42682 (July 16, 2004), unchanged in *Final Determination of Sales at Less Than Fair Value: Certain Frozen and Canned Warmwater Shrimp From the Socialist Republic of Vietnam*, 69 FR 71005 (December 8, 2004). The record shows that data in the Indian Import Statistics, as well as that from the other Indian sources, represent data that are contemporaneous with the POI, product–specific, and tax–exclusive. *See Surrogate Value Memorandum*. In those instances where we could not obtain publicly available information contemporaneous to the POI with which to value factors, we adjusted the surrogate values using, where appropriate, the Indian Wholesale Price Index (''WPI'') as published in the *International Financial Statistics* of the International Monetary Fund. *See, e.g. PSF* at 77380 and *CLPP* at 19704.

Furthermore, with regard to the Indian import–based surrogate values, we have disregarded import prices that we have reason to believe or suspect may be subsidized. We have reason to believe or suspect that prices of inputs from Indonesia, South Korea, and Thailand may have been subsidized because we have found in other proceedings that these countries maintain broadly available, non–industry-specific export subsidies. Therefore, it is reasonable to infer that all exports to all markets from these countries may be subsidized. *See Notice of Final Determination of Sales at Less Than Fair Value and Negative Final Determination of Critical Circumstances: Certain Color Television Receivers From the People's Republic of China*, 69 FR 20594 (April 16, 2004) and accompanying Issues and Decision Memorandum at Comment 7. Further, guided by the legislative history, it is the Department's practice not to conduct a formal investigation to ensure that such prices are not subsidized. *See* Omnibus Trade and Competitiveness Act of 1988, Conference Report to accompany H.R. Rep. 100–576 at 590 (1988) reprinted in 1988 U.S.C.C.A.N. 1547, 1623–24; *see also Preliminary Determination of Sales at Less Than Fair Value: Coated Free Sheet Paper from the People's Republic of China*, 72 FR 30758 (June 4, 2007) unchanged in final determination. Rather, the Department bases its decision on information that is available to it at the time it makes its determination. Therefore, we have not used prices from these countries either in calculating the Indian import–based surrogate values or in calculating market–economy input values. *See id*.

Additionally, during the POI, both Shanghai Wells and the Shaoxing Metal Companies purchased all or a portion of certain inputs from a market economy supplier and paid for the inputs in a market economy currency. The Department has instituted a rebuttable presumption that market economy input prices are the best available information for valuing an input when the total volume of the input purchased from all market economy sources during the period of investigation or review exceeds 33 percent of the total volume of the input purchased from all sources during the period. In these cases, unless case–specific facts provide adequate grounds to rebut the Department's presumption, the Department will use the weighted–average market economy purchase price to value the input. Alternatively, when the volume of an NME firm's purchases of an input from market economy suppliers during the period is below 33 percent of its total volume of purchases of the input during the period, but where these purchases are otherwise valid and there is no reason to disregard the prices, the Department will weight–average the weighted–average market economy purchase price with an appropriate SV according to their respective shares of the total volume of purchases, unless case–specific facts provide adequate grounds to rebut the presumption. When a firm has made market economy input purchases that may have been dumped or subsidized, are not bona fide, or are otherwise not acceptable for use in a dumping calculation, the Department will exclude them from the numerator of the ratio to ensure a fair determination of whether valid market economy purchases meet the 33–percent threshold. *See Antidumping Methodologies: Market Economy Inputs, Expected Non–Market Economy Wages, Duty Drawback; and Request for Comments*, 71 FR 61716, 61717–18 (October 19, 2006).

Accordingly, we valued the Shaoxing Metal Companies' inputs using the market economy prices paid for the inputs where the total volume of the input purchased from all market economy sources during the POI exceeded 33 percent of the total volume of the input purchased from all sources during that period. Alternatively, when the volume of the Shaoxing Metal Companies' purchases of an input from market economy suppliers during the POI was below 33 percent of the company's total volume of purchases of the input during the POI, we weight–averaged the weighted–average market economy purchase price with an appropriate surrogate value according to their respective shares of the total volume of purchases, as appropriate. *See* Shaoxing Metal Companies' Questionnaire Responses dated December 10, 2007, and January 8, 2008. Where appropriate, we increased the market economy prices of inputs by freight and brokerage and handling expenses. *See Surrogate Value Memorandum*. For a detailed description of all actual values used for market–economy inputs, *see Shanghai Wells Analysis Memorandum* and *Shaoxing Metal Companies Analysis Memorandum*.

Additionally, Shanghai Wells reported a market–economy purchase of an input which the Department preliminarily finds that there is reason to believe or suspect the price paid for this input may be subsidized. Therefore, because the Department's practice is to exclude prices that are dumped or subsidized, the Department has calculated the value for this input using a surrogate value derived from Indian Import Statistics, rather than the purchase price paid. *See, e.g., Folding Metal Tables and Chairs From the People's Republic of China: Final*

Results and Partial Rescission of First Antidumping Duty Administrative Review, 69 FR 75913 (December 20, 2004) and accompanying Issues and Decision Memorandum at Comment 1; *see also Surrogate Value Memorandum* and *Shanghai Wells Analysis Memorandum*.

The Department used the Indian Import Statistics to value the raw material and packing material inputs that Shanghai Wells and the Shaoxing Metal Companies used to produce the merchandise under consideration during the POI, except where listed below.

To value electricity, the Department used rates from *Key World Energy Statistics 2003*, published by the International Energy Agency (''IEA''). Additionally, to value diesel, the Department used data from Key World Energy Statistics 2005, published by IEA. Because the data were not contemporaneous to the POI, we adjusted for inflation using WPI. *See Surrogate Value Memorandum*.

For liquefied petroleum gas, we applied a surrogate value obtained from Bharat Petroleum[15], published on October 3, 2005. *See Folding Metal Tables and Chairs from the People's Republic of China: Preliminary Results of Antidumping Duty Administrative Review*, 72 FR 37703, 37710 (July 11, 2007); *see also Folding Metal Tables and Chairs From the People's Republic of China: Final Results of Antidumping Duty Administrative Review*, 72 FR 71355 (December 17, 2007). Because the data was not contemporaneous to the POI, we adjusted for inflation using WPI. *See Surrogate Value Memorandum*.

For direct, indirect, and packing labor, consistent with 19 CFR 351.408(c)(3), we used the PRC regression–based wage rate as reported on Import Administration's home page, Import Library, Expected Wages of Selected NME Countries, revised in January 2007, *http://ia.ita.doc.gov/wages/index.html*. The source of these wage–rate data on the Import Administration's web site is the Yearbook of Labour Statistics 2002, ILO (Geneva: 2002), Chapter 5B: Wages in Manufacturing. Because this regression–based wage rate does not separate the labor rates into different skill levels or types of labor, we have applied the same wage rate to all skill levels and types of labor reported by the respondent. *See Surrogate Value Memorandum*.

Because water is essential to the production process of the merchandise under consideration, the Department considers water to be a direct material input, and not as overhead, and valued water with a surrogate value according to our practice. *See Final Determination of Sales at Less Than Fair Value and Critical Circumstances: Certain Malleable Iron Pipe Fittings From the People's Republic of China*, 68 FR 61395 (October 28, 2003) and, accompanying Issue and Decision Memorandum at Comment 11. The Department valued water using data from the Maharashtra Industrial Development Corporation (*www.midcindia.org*) since it includes a wide range of industrial water tariffs. This source provides 386 industrial water rates within the Maharashtra province from June 2003: 193 for the ''inside industrial areas'' usage category and 193 for the ''outside industrial areas'' usage category. Because the value was not contemporaneous with the POI, we adjusted the rate for inflation. *See Surrogate Value Memorandum*.

We used Indian transport information in order to value the freight–in cost of the raw materials. The Department determined the best available information for valuing truck freight to be from *www.infreight.com*. This source provides daily rates from six major points of origin to five destinations in India using data from October 2005 to March 2006, because data from the POI was unavailable. The Department obtained a price quote from each point of origin to each destination and averaged the data accordingly. Consistent with the calculation of inland truck freight, the Department used the same freight distances used in the calculation of inland truck freight, as reported by *www.infreight.com* to derive a value in Rupees per kilogram per kilometer. *See Surrogate Value Memorandum*.

The Department used four sources to calculate a surrogate value for domestic brokerage expenses. The sources are from Essar Steel Ltd., Agro Dutch Industries Ltd., Kerjiwal Paper, and Navneet Publication. The Department first derived an average per–unit amount from each source. Then the Department adjusted each average rate for inflation. Finally, the Department averaged the two per–unit amounts to derive an overall average rate for the POI. *See Surrogate Value Memorandum*.

To value factory overhead, selling, general, and administrative expenses, and profit, we used the data from the audited financial statements from the 2006–2007 Annual Report of Lakshmi Precision Screws, Ltd. (''Lakshmi''). While this company produces comparable rather than identical merchandise, Lakshmi uses an integrated wire–drawing production process with steel wire rod as the main input, which closely mirrors that of the mandatory respondents. Specifically, the straightening, cutting, and forming process of screws is similar to that of hangers. While Petitioner provided an additional source for surrogate financial ratios using the financial statements of Usha Martin Ltd. (''Usha''), and Shanghai Wells provided the surrogate financial statements of Godrej & Boyce Manufacturing Company Ltd. (''G&B''), we find that neither Usha nor G&B use a production process that mirrors the manufacture of hangers as closely as screws.

To value low carbon steel wire rod, we used price data fully contemporaneous with the POI for 6mm and 8mm steel wire rod available on the website of the Indian Joint Plant Committee (''JPC''). The JPC is a joint industry/government board that monitors Indian steel prices. These data are publicly available, specific to the input in question, represent a broad market average, and are tax–exclusive. *See* 19 CFR 351.408(c)(1).

Currency Conversion

We made currency conversions into U.S. dollars, in accordance with section 773A(a) of the Act, based on the exchange rates in effect on the dates of the U.S. sales as certified by the Federal Reserve Bank.

Verification

As provided in section 782(i)(1) of the Act, we intend to verify the information upon which we will rely in making our final determination.

Combination Rates

In the *Initiation Notice*, the Department stated that it would calculate combination rates for certain respondents that are eligible for a separate rate in this investigation. *See Initiation Notice*, 72 FR 52859. This change in practice is described in *Policy Bulletin 05.1*, available at http://ia.ita.doc.gov/.rates.

Preliminary Determination

The weighted–average dumping margins are as follows:

[15] www.bharatpetroleum.com/general/gen_petroprices.asp.

STEEL WIRE GARMENT HANGERS FROM THE PRC – DUMPING MARGINS

Exporter & Producer	Weighted–Average Deposit Rate
Shanghai Wells Hanger Co., Ltd. ^	33.85 %
Shaoxing Metal Companies: * Shaoxing Gangyuan Metal Manufactured Co., Ltd., Shaoxing Andrew Metal Manufactured Co., Ltd., Shaoxing Tongzhou Metal Manufactured Co., Ltd., Company "X"	164.54 %
Jiangyin Hongji Metal Products Co., Ltd ^	83.98 %
Shaoxing Meideli Metal Hanger Co., Ltd. *	83.98 %
Shaoxing Dingli Metal Clotheshorse Co., Ltd. *	83.98 %
Shaoxing Liangbao Metal Manufactured Co. Ltd. *	83.98 %
Shaoxing Zhongbao Metal Manufactured Co. Ltd. *	83.98 %
Shangyu Baoxiang Metal Manufactured Co. Ltd. *	83.98 %
Zhejiang Lucky Cloud Hanger Co., Ltd. *	83.98 %
Pu Jiang County Command Metal Products Co., Ltd. *	83.98 %
Shaoxing Shunji Metal Clotheshorse Co., Ltd. *	83.98 %
Ningbo Dasheng Hanger Ind. Co., Ltd. *	83.98 %
Jiaxing Boyi Medical Device Co., Ltd. *	83.98 %
Yiwu Ao–Si Metal Products Co., Ltd. *	83.98 %
Shaoxing Guochao Metallic Products Co., Ltd. *	83.98 %
PRC–Wide Rate[16]	221.05 %

[16] The PRC-Wide entity includes Tianjin Hongtong Metal Manufacture Co. Ltd.

Disclosure

We will disclose the calculations performed within five days of the date of publication of this notice to parties in this proceeding in accordance with 19 CFR 351.224(b).

Suspension of Liquidation

In accordance with section 733(d) of the Act, we will instruct CBP to suspend liquidation of all entries of steel wire garment hangers from the PRC as described in the ''Scope of Investigation'' section, entered, or withdrawn from warehouse, for consumption from Shanghai Wells, Shaoxing Metal Companies, the PRC SR Recipients and the PRC–wide entity on or after the date of publication of this notice in the **Federal Register**.

We will instruct CBP to require a cash deposit or the posting of a bond equal to the weighted–average dumping margin amount by which the NV exceeds U.S. price, as indicated in the chart above as follows: (1) The rate for the firms listed in the chart above will be the rate we have determined in this preliminary determination; (2) for all non–PRC exporters of the merchandise under consideration which have not received their own rate, the cash–deposit rate will be the rate applicable to the PRC exporter in the combination listed above, that supplied that non–PRC exporter. These suspension–of-liquidation instructions will remain in effect until further notice.

International Trade Commission Notification

In accordance with section 733(f) of the Act, we have notified the ITC of our preliminary affirmative determination of sales at less than fair value. Section 735(b)(2) of the Act requires the ITC to make its final determination as to whether the domestic industry in the United States is materially injured, or threatened with material injury, by reason of imports of steel wire garment hangers, or sales (or the likelihood of sales) for importation, of the merchandise under consideration within 45 days of our final determination.

Public Comment

Case briefs or other written comments may be submitted to the Assistant Secretary for Import Administration no later than seven days after the date the final verification report is issued in this proceeding and rebuttal briefs, limited to issues raised in case briefs, no later than five days after the deadline for submitting case briefs. *See* 19 CFR 351.309(c)(1)(i) and 19 CFR 351.309(d)(1). A list of authorities used and an executive summary of issues should accompany any briefs submitted to the Department. This summary should be limited to five pages total, including footnotes.

In accordance with section 774 of the Act, we will hold a public hearing, if requested, to afford interested parties an opportunity to comment on arguments raised in case or rebuttal briefs. If a request for a hearing is made, we intend to hold the hearing three days after the deadline of submission of rebuttal briefs at the U.S. Department of Commerce, 14th Street and Constitution Ave, NW., Washington, DC 20230, at a time and location to be determined. Parties should confirm by telephone the date, time, and location of the hearing two days before the scheduled date.

Interested parties who wish to request a hearing, or to participate if one is requested, must submit a written request to the Assistant Secretary for Import Administration, U.S. Department of Commerce, Room 1870, within 30 days after the date of publication of this notice. *See* 19 CFR 351.310(c). Requests should contain the party's name, address, and telephone number, the number of participants, and a list of the issues to be discussed. At the hearing, each party may make an affirmative presentation only on issues raised in that party's case brief and may make rebuttal presentations only on arguments included in that party's rebuttal brief.

We will make our final determination no later than 75 days after the date of publication of this preliminary determination, pursuant to section 735(a) of the Act.

This determination is issued and published in accordance with sections 733(f) and 777(i)(1) of the Act.

Dated: March 18, 2008.

David M. Spooner,

Assistant Secretary for Import Administration.

[FR Doc. E8–6079 Filed 3–24–08; 8:45 am]

BILLING CODE 3510–DS–S

DEPARTMENT OF COMMERCE

International Trade Administration

[A–428–830]

Stainless Steel Bar from Germany: Notice of Rescission of Antidumping Duty New Shipper Review

AGENCY: Import Administration, International Trade Administration, Department of Commerce.

SUMMARY: The Department of Commerce (''the Department'') is rescinding the new shipper review of the antidumping duty order on stainless steel bar from Germany manufactured by Flanschenwerk Bebitz GmbH (''Flanschenwerk''). The period of review (''POR'') covers March 1, 2007, through August 31, 2007. This order was revoked as a result of a sunset proceeding and the effective date of revocation is prior to the U.S. entry made by Flanschenwerk subject to this new shipper review.

EFFECTIVE DATE: March 25, 2008.

FOR FURTHER INFORMATION CONTACT: Brandon Farlander, AD/CVD Operations, Office 1, Import Administration, International Trade Administration, U.S. Department of Commerce, 14th Street and Constitution Avenue, NW, Washington, DC 20230; telephone (202) 482–0182.

SUPPLEMENTARY INFORMATION:

Background

On March 7, 2002, the Department published an antidumping duty order on stainless steel bar from Germany. *See Notice of Amended Final Determination of Sales at Less Than Fair Value and Antidumping Duty Order: Stainless Steel Bar from Germany*, 67 FR 10382 (March 7, 2002) (''*Investigation Final*''). On October 10, 2003, the Department published an amended antidumping duty order on stainless steel bar from Germany. *See Notice of Amended Antidumping Duty Orders: Stainless Steel Bar from France, Germany, Italy, Korea, and the United Kingdom*, 68 FR 58660 (October 10, 2003).

On October 1, 2007, we received a request for a new shipper review from Flanschenwerk for the period March 1, 2007, through August 31, 2007. We initiated the review on October 26, 2007. *See Notice of Initiation of New Shipper Antidumping Duty Review: Stainless Steel Bar from Germany*, 72 FR 60807 (October 26, 2007). On December 20, 2007, Flanschenwerk responded to Section A of the antidumping questionnaire.

On February 1, 2007, the Department initiated, and the U.S. International Trade Commission (''ITC'') instituted, a sunset review of the antidumping duty order on stainless steel bar from Germany. *See Initiation of Five–Year (''Sunset'') Reviews*, 72 FR 4689 (February 1, 2007). As a result of its sunset review, the Department found that revocation of the antidumping duty order on stainless steel bar from Germany would be likely to lead to the continuation or recurrence of dumping. *See Stainless Steel Bar from Germany; Final Results of the Sunset Review of the Antidumping Duty Order*, 72 FR 56985 (October 5, 2007).

On January 31, 2008, the ITC determined that revocation of the order on stainless steel bar from Germany would not be likely to lead to continuation or recurrence of material injury to an industry in the United States within a reasonably foreseeable time. *See Stainless Steel Bar From France, Germany, Italy, Korea, and The United Kingdom*, 73 FR 5869 (January 31, 2008) and USITC Publication 3981 (January 2008), entitled *Stainless Steel Bar from France, Germany, Italy, Korea, and the United Kingdom* (Inv. Nos. 701–TA–413 and 731–TA–913–916 & 918 (Review)). As a result of the determination by the ITC that revocation of the order on stainless steel bar from Germany is not likely to lead to the continuation or recurrence of material injury to an industry in the United States, the Department, pursuant to section 751(d) of the Tariff Act of 1930, as amended (''the Act''), revoked the antidumping duty order on stainless steel bar from Germany. *See Revocation of Antidumping Duty Orders on Stainless Steel Bar From France, Germany, Italy, South Korea, and the United Kingdom and the Countervailing Duty Order on Stainless Steel Bar From Italy*, 73 FR 7258 (February 7, 2008) (''*Stainless Steel Bar Revocation Notice*'').

As a result of the ITC's vote to revoke the antidumping duty order on stainless steel bar from Germany on January 8, 2008, Flanschenwerk submitted an extension request, also on January 8, 2008, for filing its Sections B and C questionnaire responses until the Department published its revocation notice of this order. On March 17, 2008, Flanschenwerk withdrew its new shipper review request.

Scope of the Order

For the purposes of this order, the term ''stainless steel bar'' includes articles of stainless steel in straight lengths that have been either hot–rolled, forged, turned, cold–drawn, cold–rolled or otherwise cold–finished, or ground, having a uniform solid cross section along their whole length in the shape of circles, segments of circles, ovals, rectangles (including squares), triangles, hexagons, octagons, or other convex polygons. Stainless steel bar (''SSB'') includes cold–finished stainless steel bars that are turned or ground in straight lengths, whether produced from hot–rolled bar or from straightened and cut rod or wire, and reinforcing bars that have indentations, ribs, grooves, or other deformations produced during the rolling process.

Except as specified above, the term does not include stainless steel semi–finished products, cut length flat–rolled products (*i.e.*, cut length rolled products which if less than 4.75 mm in thickness have a width measuring at least 10 times the thickness, or if 4.75 mm or more in thickness having a width which exceeds 150 mm and measures at least twice the thickness), products that have been cut from stainless steel sheet, strip or plate, wire (*i.e.*, cold–formed products in coils, of any uniform solid cross section along their whole length, which do not conform to the definition of flat–rolled products), and angles, shapes and sections.

The SSB subject to this order is currently classifiable under subheadings 7222.11.00.05, 7222.11.00.50, 7222.19.00.05, 7222.19.00.50, 7222.20.00.05, 7222.20.00.45, 7222.20.00.75, and 7222.30.00.00 of the *Harmonized Tariff Schedule of the United States* (''HTSUS''). Although the HTSUS subheadings are provided for convenience and customs purposes, the written description of the scope of the order is dispositive.

Rescission of Review

Flanschenwerk's POR U.S. entry occurred after the effective date of revocation of the order, which was March 7, 2007. Further, the Department has already issued its revocation instructions to the U.S. Customs and Border Protection, which will liquidate this entry without regard to antidumping duties (*i.e.*, release all bonds and refund all cash deposits, with interest). *See Stainless Steel Bar Revocation Notice*. Because Flanschenwerk has no additional U.S. entries to review during the POR, we are rescinding this new shipper review. No liquidation instructions are necessary because the Department has already issued its revocation instructions, which will result in the liquidation of Flanschenwerk's U.S. entry. In addition, because this order is now revoked, no cash deposit instructions are necessary.

Notification Regarding Administrative Protective Orders

This notice also serves as a reminder to parties subject to administrative protective order (''APO'') of their responsibility concerning the disposition of proprietary information disclosed under APO in accordance with 19 CFR 351.305(a)(3). Timely written notification of the return or destruction of APO materials or conversion to judicial protective order is hereby requested. Failure to comply with the regulations and the terms of an APO is a sanctionable violation.

This notice is published in accordance with section 777(i) of the Act and 19 CFR 351.214(f)(3).

Dated: March 18, 2008.

Stephen J. Claeys,

Deputy Assistant Secretary for Import Administration.

[FR Doc. E8–6042 Filed 3–24–08; 8:45 am]

BILLING CODE 3510–DS–S

DEPARTMENT OF COMMERCE

International Trade Administration

International Trade Administration Mission Statement

AGENCY: Department of Commerce, ITA.

ACTION: Notice.

Mission Statement

U.S. Health Care Trade Policy Mission to China, April 24–25, 2008.

Mission Description: The United States Department of Commerce, International Trade Administration (ITA) is organizing a Health-Care Trade Mission to China, April 23–25, 2008. The trade mission will focus on market access and target a broad range of health-care industries, such as the pharmaceutical, medical device, health insurance and health services industries, and will be led by Under Secretary of Commerce Christopher A. Padilla. ITA seeks to provide participating U.S. companies an opportunity to meet with key officials in China's health ministries to discuss the direction and structure of China's upcoming health-care reforms. The mission will likely take the form of 3–4 meetings between the delegation and China's Ministry of Health, Ministry of Human Resources and Social Security (formerly Ministry of Labor and Social Security), National Development and Reform Commission and possibly the Ministry of Finance or State Food and Drug Administration (subject to availability). In addition to these meetings, the agenda will include a preparatory meeting between the delegation and the Under Secretary.

Commercial Setting: This Trade Mission will take place following China's planned announcement in late March outlining significant changes to its financing, regulation, and management of its health-care system. The U.S. pharmaceutical, medical device, health insurance and health services industries currently have many market access concerns with China, but the potential impact of the pending health-care reforms are the leading concern of many U.S. companies. The reforms China will undertake have the potential to significantly alter the market for U.S. health goods and services. Industry's ability to engage with the Government of China on these reforms has been limited so far, and while it is understood that an outline of the reforms will be announced in March, industry still lack details and a forum to engage with key Chinese policy makers. This trade mission will provide that opportunity.

This mission builds on previous DOC engagement with China's health ministries under the auspices of the U.S.-China Health-Care Forum (HCF). The mission will supplement HCF cooperation between DOC and the U.S. Department of Health and Human Services and China's Ministry of Health and Ministry of Commerce.

Overview of China's Health Reform Situation: China has made improving health-care access to its citizens a priority in its Eleventh Five-Year Plan (2006–2010). China will announce reforms to improve the services provided by China's health-care system, increase the number of insured citizens, reduce corruption and perverse profit incentives, and reduce the overall costs to the consumer. While details are not yet available, Chinese press and U.S. industry anticipate that reforms will lay out a plan for universal health coverage, will institute new health-care delivery systems, will reform hospital management and will change the way drugs are regulated. We expect the outline of the plan to be announced at the meeting of the National People's Congress in March. The overall proposal is expected to focus only on principles and general direction, be supported by eight more detailed supplemental reform proposals and be implemented through a series of pilot programs.

All of these pending reforms present a serious change in the market for U.S. health goods and services providers. U.S. health-care goods and services providers with a clear understanding of China's policy environment have the potential to influence the policy direction and take advantage of what may be a dramatically growing Chinese health-care market.

Mission Goals: The trade mission will facilitate dialogue between the U.S. health-care industry and Chinese policymakers to assist mission participants in gaining first-hand information about China's upcoming health-care reforms and provide a forum for U.S. stakeholders to provide feedback to relevant Chinese Government ministries to encourage policy choices that increase market access for U.S. goods and services. The trade mission also will assist ITA in identifying areas of interest to China for future cooperation on these market access issues.

Summary of Results Expected From the Mission

- Improve U.S. health-care industries' understanding of the pending health-care reforms in China.
- Discover areas of interest to China where future cooperation with U.S. Government and industry could further improve market access for U.S. goods and services.
- Provide Chinese policymakers with U.S. industry feedback on the direction of the reforms.
- Introduce U.S. industry to China's new leadership.

Mission Scenario: In China, the International Trade Administration will:

- Organize a preparatory meeting between the delegation, the Under Secretary, and key U.S. Embassy officials.
- Schedule 3–4 meetings with key Government of China ministries. (Subject to the availability of officials in the relevant ministries.)

Proposed Mission Timetable

Wednesday, April 23

Trade Mission Delegation Dinner with the Under Secretary.

Thursday, April 24–Friday, April 25

Meeting with the Vice Minister of the Ministry of Health.

Meeting with the Vice Minister of the Ministry of Human Resources and Social Security.

Meeting with the Vice Minister of the National Development and Reform Commission.

Meeting with the Vice Minister of the Ministry of Finance (Time permitting).

Criteria for Participation

- Relevance of the company's business line to the mission scope and goals;
- Potential for business in the selected markets;

• Timeliness of the company's completed application, participation agreement, and payment of the mission participation fee;

• Certification that the company's products and/or services are manufactured or produced in the United States or, if manufactured/produced outside of the United States, the products/services must be marketed under the name of a U.S. firm and have U.S. content representing at least 51 percent of the value of the finished goods or services;

• Diversity of health-care sectors represented; and

• Rank/seniority of the designated company representative.

Any partisan political activities of an applicant, including political contributions, will be entirely irrelevant to the selection process.

The mission will be promoted through the following venues: ITA's Export Assistance Centers, the Health and Consumer Goods team, the Service Industries team, the Asia Pacific Team, the Trade Events List *http://www.export.gov;* the **Federal Register**; relevant trade associations; past Commerce health-care policy event participants; and the Commerce Department trade missions calendar: *http://www.ita.doc.gov/doctm/tmcal.html.*

Recruitment will begin immediately and will close on April 1, 2007. The trade mission participation fee will be U.S. $1,250 per company. Each participating organization will be allowed to send only one representative. The participation fee does not include the cost of travel, lodging, some ground transportation, or some meals. Participation is open to 15 qualified U.S. companies. Invited companies must submit the trade mission participation fee and completed participation agreement within one week of receipt of their invitation in order to secure their place in the mission. After that time, other companies may be invited to fill that spot. Applications received after the closing date will be considered only if space and scheduling constraints permit.

FOR FURTHER INFORMATION CONTACT: Anthony Cino, U.S. Department of Commerce, e-mail: *anthony_cino@ita.doc.gov*, telephone: 202–482–5679, facsimile: 202–482–2266.

Anthony Cino,

Office of the Chinese Economic Area, International Trade Administration, U.S. Department of Commerce.

[FR Doc. E8–5935 Filed 3–24–08; 8:45 am]

BILLING CODE 3510–25–P

DEPARTMENT OF COMMERCE

National Institute of Standards and Technology

Notice of Inventions Available for Licensing

AGENCY: National Institute of Standards and Technology, Commerce.

ACTION: Notice of inventions available for licensing.

SUMMARY: The inventions listed below are owned in whole or in part by the U.S. Government, as represented by the Secretary of Commerce. The U.S. Government's interest in these inventions is available for licensing in accordance with 35 U.S.C. 207 and 37 CFR part 404 to achieve expeditious commercialization of results of federally funded research and development.

FOR FURTHER INFORMATION CONTACT: Technical and licensing information on these inventions may be obtained by writing to: National Institute of Standards and Technology, Office of Technology Partnerships, Attn: Mary Clague, Building 222, Room A155, Gaithersburg, MD 20899. Information is also available via telephone: 301–975–4188, fax 301–975–3482, or e-mail: *mary.clague@nist.gov.* Any request for information should include the NIST Docket number and title for the invention as indicated below.

SUPPLEMENTARY INFORMATION: NIST may enter into a Cooperative Research and Development Agreement (''CRADA'') with the licensee to perform further research on the invention for purposes of commercialization. The inventions available for licensing are:

[NIST DOCKET NUMBER: 7–003]

Title: Highly Charged Ion Modified Oxides (HCIMO) for Tunable Resistance.

Abstract: Highly Charged Ion Modified Oxides (HCIMO) are achieved by irradiating a thin, high resistance oxide with highly charged ions (HCIs) and then depositing a conducting material of choice on top the irradiated oxide. The irradiation by HCIs preferentially ablates a region on the order of a cubic nanometer at each HCI's impact site breaking a hole through the ultra-thin oxide. This is demonstrated by preparing an insulating layer of aluminum oxide on a cobalt lower electrode layer, exposing the oxide to very dilute HCI radiation, and then depositing a cobalt upper layer. The data show a clear and systematic decrease in the resistance of the multilayer devices correlated to the HCI dose at very dilute doses. The nanometer dimensions of individual HCI impacts and the precise control over the dose combine to allow high precision selection of the material's resistance over a wide range of values, currently demonstrated over three orders of magnitude. As HCI modification only occurs within a few nanometers of the surface and generally does not affect metals, no special measures are needed to protect surrounding device structures from HCI damage. Since the size of the material modification is determined by the properties of a single ion, precise alignment is not required, only uniform illumination of the device area by the HCI beam, greatly simplifying commercial integration of HCI irradiation.

[NIST DOCKET NUMBER: 7–008]

Title: A Four-Wave Mixing Source of Squeezed Light for Image Processing and Interferometry

Abstract: The invention provides a source of squeezed light, generated using a 4-level, four-wave mixing scheme in rubidium vapor. Strong relative-number squeezing between two beams has been demonstrated; much stronger than previously seen in any four-wave mixing system. The scheme relies on a chi(3) nonlinearity, and a single-pass, no-cavity, experimental implementation which has relaxed phase matching requirements, as compared to chi(2) crystal sources, and easily produces squeezing in multiple spatial modes.

Dated: March 18, 2008.

Richard F. Kayser,

Acting Deputy Director.

[FR Doc. E8–6029 Filed 3–24–08; 8:45 am]

BILLING CODE 3510–13–P

DEPARTMENT OF COMMERCE

National Oceanic and Atmospheric Administration

RIN 0648–XG61

Magnuson-Stevens Act Provisions; General Provisions for Domestic Fisheries; Application for Exempted Fishing Permit

AGENCY: National Marine Fisheries Service (NMFS), National Oceanic and

Atmospheric Administration (NOAA), Commerce.

ACTION: Notice; request for comments.

SUMMARY: The Assistant Regional Administrator for Sustainable Fisheries, Northeast Region, NMFS (Assistant Regional Administrator) has made a preliminary determination that the subject programmatic Exempted Fishing Permit (EFP) application for the Study Fleet Program contains all of the required information and warrants further consideration. Study Fleet projects are managed by the Northeast Fisheries Science Center (NEFSC) and funded under the Northeast Cooperative Research Partners Program (NCRPP) contracts and Research Set-Aside (RSA) grants to regional institutions. The programmatic EFP would grant exemptions from minimum fish size and possession and landing limits. However, further review and consultation may be necessary before a final determination is made to issue the EFP. Therefore, NMFS announces that the Assistant Regional Administrator proposes to issue a programmatic EFP that would allow up to 30 vessels to conduct fishing operations that are otherwise restricted by the regulations governing the fisheries of the Northeastern United States.

Regulations under the Magnuson-Stevens Fishery Conservation and Management Act require publication of this notification to provide interested parties the opportunity to comment on applications for proposed EFPs.

DATES: Comments must be received on or before April 9, 2008.

ADDRESSES: Comments on this notice may be submitted by e-mail. The mailbox address for providing e-mail comments is *StudyFleetEFP@noaa.gov*. Include in the subject line of the e-mail comment the following document identifier: ''Comments on NEFSC Study Fleet Programmatic EFP.'' Written comments should be sent to Patricia A. Kurkul, Regional Administrator, NMFS, Northeast Regional Office, 1 Blackburn Drive, Gloucester, MA 01930. Mark the outside of the envelope ''Comments on NEFSC Study Fleet Programmatic EFP.'' Comments may also be sent via facsimile (fax) to (978) 281–9135.

FOR FURTHER INFORMATION CONTACT: Moira Kelly, Fishery Policy Analyst, phone: 978–281–9218, fax: 978–281–9135.

SUPPLEMENTARY INFORMATION: The EFP would programmatically exempt federally permitted commercial fishing vessels from the regulations detailed below participating in the Study Fleet Program and operating under projects managed by the NEFSC and funded by NCRPP contracts and Research-Set-Aside (RSA) grants. The programmatic EFP would cover two tiers of exemptions. The first tier would exempt vessels operators and technicians from minimum size and possession limits for the time it takes to weigh and measure fish that would otherwise be discarded. The second tier would exempt vessels from minimum size and possession and landing limits of otherwise prohibited fish. The programmatic EFP would cover the following Study Fleet projects, the vessels associated with such projects, and the study fleet technicians and vessel operators:

(1) NEFSC - NCRPP Groundfish Fleet Northern (three vessels) and Southern (two vessels) trawlers, with up to five additional vessels.

(2) NEFSC - Groundfish/*Loligo* Fleet (three vessels, up to three additional vessels).

(3) NEFSC - University of Massachusetts School for Marine Science and Technology (SMAST) - Cooperative Marine Education and Research (CMER) Southern New England (SNE) Yellowtail Flounder Fleet (three vessels).

(4) NEFSC - Gulf of Maine Research Institute (GMRI) - Monkfish Fleet (up to five vessels).

(5) SMAST - Georges Bank (GB) Multispecies Fleet (five vessels).

A project- and vessel-specific EFP, detailing all vessels involved in each the projects, would be granted to each vessel to facilitate this research. The EFP would specify under which restrictions and exemptions the vessel would be required to operate. The Tier 1 EFP would specify that the retention of otherwise prohibited fish is temporary only, and fish must be returned to the sea as quickly as possible, after weighing and measuring. The Tier 2 EFP would specify the limited amounts of otherwise prohibited fish that could be retained and landed.

The following table details the regulations that the participating vessels would be exempted from, and the number of at-sea days that vessels would be permitted to operate under the exemptions:

Study Fleet Project	# of Vessels	Discard Sampling at-sea days (Technician)	Discard Sampling at-sea days (Crew/Captain)	Biological Sampling at-sea days (Technician)	Biological Sampling at-sea days (Crew/Captain)	Exempted Regulations in 50 CFR part 648
NEFSC/NRCPP Groundfish Fleet	up to 10	100	50	0	March - April samples 4-6 totes whole haddock	§ 648.83(a)(3) NE multispecies minimum size **Possession limits** § 648.86(b) Atlantic cod § 648.86(c) Atlantic halibut § 648.86(e) White hake § 648.86(g) Yellowtail flounder § 648.86(j) GB winter flounder
NEFSC Groundfish/ *Loligo*	up to 6	60	30	60	0	All of the above, plus, if during closure of directed fishery, § 648.22(c) Incidental possession limit of *Loligo*
NEFSC/SMAST/ CMERSNE Yellowtail Flounder	3	30	90	30	Monthly totes at least 100 fish each	§ 648.83(a)(3) NE multispecies minimum size § 648.86(g)(1) SNE Yellowtail flounder possession limit

Study Fleet Project	# of Vessels	Discard Sampling at-sea days (Technician)	Discard Sampling at-sea days (Crew/Captain)	Biological Sampling at-sea days (Technician)	Biological Sampling at-sea days (Crew/Captain)	Exempted Regulations in 50 CFR part 648
NEFSC/GMRI Monkfish	5	80	160	80	0	§ 648.93 Monkfish minimum fish size § 648.94 Monkfish possession limit
SMAST GB Groundfish	5	50	0	50	0	Same as NEFSC/ NRCPP Groundfish Fleet Project

Tier 1

The first aspect of the project would temporarily exempt the Study Fleet vessels from all minimum size and possession limits for the time it takes to measure and weigh otherwise prohibited fish. This exemption would allow NEFSC to understand the issues that affect the accuracy of estimated discard weights and to improve analyses. The protocol under which the NEFSC staff and the vessel operators would conduct these measurements is not significantly different than the protocol currently used by NMFS-certified observers. Under this protocol, no other change to normal commercial fishing operators would occur.

Initially, NEFSC or partner Study Fleet technicians would be onboard the vessels to provide data entry training and to observe and report on sorting and discarding practices under normal fishing operations. On some subsequent trips, technicians would sort, weigh, and measure fish that are to be discarded, in a method that is consistent with current NEFSC observer protocols. An exemption is required because some discarded species would be on deck slightly longer than under normal sorting procedures. The goal is to identify sorting routines that would minimally impact the duration of catch processing, and technicians would return the fish to the water as soon as possible. On other trips, the vessel operators and crew would be responsible for sorting, weighing, and measuring the fish that are to be discarded from a random number of tows and trips, following the established protocol. These crew and operators would be trained in the protocol by the NEFSC or partner Study Fleet technicians and would return the fish to the water as soon as possible.

Tier 2

The second aspect of the programmatic EFP for the Study Fleet would allow more in-depth biological sampling to occur on various ages of fish by exempting vessels from minimum size, possession, and landing limits of species of interest. Some of the biological sampling would be done by a Study Fleet technician during a trip, as available during normal commercial fishingoperations. That is, while a crew member is dressing a fish for storage, the Study Fleet technician would collect the stomach and gonads of that fish for later research. For this tier, vessels would be exempted from minimum size requirements and possession and landing limits, as applicable, in very limited circumstances. Vessel operators on specified trips, using marked totes, would collect fish to be provided to the NEFSC for biological sampling only.

Project-specific biological sampling to obtain maturity, fecundity, age, and growth data would require a separate EFP for possession and sampling of species of interest, including undersized individuals, possibly in excess of trip limits, where samples may be processed at sea or retained for delivery to research facilities on shore by the Study Fleet vessels. The current interest in enhanced biological sampling is in response to initial Study Fleet goals endorsed by the NCRPP and the New England Fishery Management Council's Research Steering Committee. The initial biological sampling program and protocol development would focus on obtaining haddock and yellowtail flounder samples to evaluate maturity and fecundity patterns that may be affected by recent strong year classes. Samples of large monkfish, large cod, and other species would be used to fill in gaps in port-based sampling. See below for detailed descriptions of catch estimates for each of the five Study Fleet projects. A small number of live fish would also be collected to support laboratory studies in survival.

Sampling would be done by NEFSC or partner Study Fleet technicians and by trained crew members. On trips where the technicians would be on board, standard NEFSC sampling protocols would be followed. None of the landed biological samples from these trips would be sold. On trips where technicians would not be on board, select vessel operators or crew would separate fish to be sampled by technicians in port. The EFP for biological sampling would allow fishermen to retain specified amounts of specific species in whole or round weight condition, including some undersized individuals, in marked totes, which would be delivered to Study Fleet technicians or local NMFS port agents for enumeration and measurement. It is anticipated that these whole fish may cause a vessel to exceed a regulatory trip limit. The EFP would exempt the vessels from the trip limits in limited situations so that the vessel is not disadvantaged when collecting biological samples.

NMFS would receive advance notification of specific plans for retention under this EFP. This notification would provide the vessel name and vessel operator, the number of marked totes that would be delivered, an estimate of the number of undersized individuals that would be retained, and an estimated time frame for the sampling trips. The amount of fish delivered to the Study Fleet technicians would not exceed five totes, or 700 lb (317.51 kg) per trip. Vessels fishing under this EFP would be required to call into the Interactive Voice Response system to identify the trip, following the standard EFP protocol. Each of the biological sampling projects is detailed below. Please see the table above for details on the regulations that would be exempted.

The NEFSC Groundfish and Groundfish and *Loligo* projects would involve sampling seven species on a maximum of 20 trips with technicians aboard. This sampling would not affect trip limits because the undersized fish would be discarded at sea. The estimated maximum discard weight of sampled sub-legal fish is 4,000 lb (1,814.37kg) per species per trip (100 lengths X 20 trips = 2,000 individuals X mean weight of 2 lb (0.91 kg) = 4,000 lb (1,814.37 kg) per species), not to exceed 8,000 lb (3628.74 kg) per species per trip if two statistical areas are sampled on the same trip.

Also under the NEFSC Groundfish project, GB haddock maturity and

fecundity data would be collected. NEFSC is requesting an EFP to collect one tote of undersized haddock for sampling. The vessels would deliver up to five totes of fish (600 lb, 272.16 kg), four of which would contain legal sized fish, and one of which would contain undersized fish. The fish would be whole and iced. The total amount of GB haddock that would be authorized under this EFP would not exceed 1,300 lb (589.67 kg). NEFSC staff would meet the captain at the dock to collect the fish. None of the fish would be sold.

The NEFSC/SMAST/CMER SNE Yellowtail Flounder project would obtain 100 yellowtail flounder per month during the April through August spawning period on three vessels, up to 1,500 fish total, followed by non-spawning month sampling for 7 months at 25 fish per month per vessel, for up to an additional 525 fish. The resulting length frequency and maturity sampling would account for approximately 2,025 undersized yellowtail flounder, or 2,500 lb (1133.98 kg).

The GMRI Monkfish project would require the biological sampling EFP to allow fishermen to retain the entire monkfish catch on the last tow for two trips per month for eight months on five vessels, resulting in 80 separate samples, not to exceed 550 lb (249.48 kg) of monkfish per sample. Each sample would be delivered to a GMRI sampler. Legal sized fish would be allowed to be sold by the vessel, but undersized fish would be retained by GMRI. It is estimated that the amount of undersized fish for the 80 samples would not exceed 4,800 lb (2177.24 kg).

The SMAST GB Groundfish project is requesting the following under the biological sampling EFP: Up to 100 monkfish (750 lb, 340.19 kg) for age and growth, not to exceed 20 monkfish (150 lb, 68.04 kg) per trip; 50 whole skates (150 lb, 68.04 kg), not to exceed 10 (30 lb, 13.61 kg) per trip; and, 10 cod (100 lb, 45.36 kg), not to exceed 2 (20 lb, 9.07 kg) per trip. In addition, 100 lengths of kept fish and 100 lengths of discarded fish of each of the following species would be collected: Cod, winter flounder, grey sole, yellowtail flounder, haddock, monkfish, and American plaice.

The applicant may make requests to NMFS for minor modifications and extensions to the EFP throughout the year. EFP modifications and extensions may be granted by NMFS without further notice if they are deemed essential to facilitate completion of the proposed research and result in only a minimal change in the scope or impact of the initially approved EFP request. In accordance with NOAA Administrative Order 216–6, a Categorical Exclusion or other appropriate NEPA document would be completed prior to the issuance of the EFP. Further review and consultation may be necessary before a final determination is made to issue the EFP. After publication of this document in the **Federal Register**, the EFP, if approved, may become effective following a 15-day public comment period.

Authority: 16 U.S.C. 1801 *et seq.*

Dated: March 20, 2008.

Emily H. Menashes,

Acting Director, Office of Sustainable Fisheries, National Marine Fisheries Service.

[FR Doc. E8–6009 Filed 3–24–08; 8:45 am]

BILLING CODE 3510–22–S

DEPARTMENT OF COMMERCE

National Oceanic and Atmospheric Administration

RIN 0648–XG39

Endangered Species; File No. 1614–01

AGENCY: National Marine Fisheries Service (NMFS), National Oceanic and Atmospheric Administration (NOAA), Commerce.

ACTION: Notice; receipt of application for modification.

SUMMARY: Notice is hereby given that the NOAA Fisheries Northeast Region, Protected Resources Division [Responsible Party: Mary Colligan], One Blackburn Drive, Gloucester, MA 01930, has requested a modification to scientific research Permit No. 1614.

DATES: Written, telefaxed, or e-mail comments must be received on or before April 24, 2008.

ADDRESSES: The modification request and related documents are available for review upon written request or by appointment in the following offices:

Permits, Conservation and Education Division, Office of Protected Resources, NMFS, 1315 East-West Highway, Room 13705, Silver Spring, MD 20910; phone (301)713–2289; fax (301)427–2520;

Northeast Region, NMFS, One Blackburn Drive, Gloucester, MA 01930–2298; phone (978)281–9300; fax (978)281–9394; and

Southeast Region, NMFS, 263 13th Ave South, St. Petersburg, FL 33701; phone (727)824–5312; fax (727)824–5309.

Written comments or requests for a public hearing on this request should be submitted to the Chief, Permits, Conservation and Education Division, F/PR1, Office of Protected Resources, NMFS, 1315 East-West Highway, Room 13705, Silver Spring, MD 20910. Those individuals requesting a hearing should set forth the specific reasons why a hearing on this particular modification request would be appropriate.

Comments may also be submitted by facsimile at (301)427–2520, provided the facsimile is confirmed by hard copy submitted by mail and postmarked no later than the closing date of the comment period.

Comments may also be submitted by e-mail. The mailbox address for providing e-mail comments is *NMFS.Pr1Comments@noaa.gov*. Include in the subject line of the e-mail comment the following document identifier: File No. 1614–01.

FOR FURTHER INFORMATION CONTACT: Brandy Belmas or Jennifer Skidmore, (301)713–2289.

SUPPLEMENTARY INFORMATION: The subject modification to Permit No. 1614, issued on February 28, 2008 (73 FR 11873), is requested under the authority of the Endangered Species Act of 1973, as amended (16 U.S.C. 1531 *et seq.*), and the regulations governing the taking, importing, and exporting of endangered and threatened species (50 CFR 222–226).

Permit No. 1614 authorizes the permit holder to collect, receive and transport 100 dead shortnose sturgeon, or parts thereof, annually. In the case of an unusual mortality event, takes may be increased from 100 up to 1,000 animals with written approval from the Director, Office of Protected Resources. Researchers are also authorized the receipt and transport of up to 50 captive bred, dead shortnose sturgeon annually from any U.S. facility authorized to hold captive sturgeon. This permit authorizes the conduct of the aforementioned research over a period of five years.

The permit holder requests authorization to increase the number of dead captive bred shortnose sturgeon received annually to 350 individuals throughout the remainder of the permit. This request stems from the probable availability of a greater number of dead captive bred shortnose sturgeon than was originally anticipated. The applicant would like to obtain these sturgeon to help meet the objectives of their current research, including reviewing research procedures and developing necropsy protocols for shortnose sturgeon.

Dated: March 19, 2008.

P. Michael Payne,

Chief, Permits, Conservation and Education Division, Office of Protected Resources, National Marine Fisheries Service.

[FR Doc. E8–5937 Filed 3–24–08; 8:45 am]

BILLING CODE 3510–22–S

DEPARTMENT OF COMMERCE

National Oceanic and Atmospheric Administration

RIN 0648–XF88

Incidental Take of Marine Mammals; Taking of Marine Mammals Incidental to Conducting Precision Strike Weapons Testing and Training by Eglin Air Force Base in the Gulf of Mexico

AGENCY: National Marine Fisheries Service (NMFS), National Oceanic and Atmospheric Administration (NOAA), Commerce.

ACTION: Notice of issuance of a letter of authorization.

SUMMARY: In accordance with provisions of the Marine Mammal Protection Act (MMPA), as amended, notification is hereby given that a letter of authorization (LOA) to take four species of marine mammals, by harassment, incidental to testing and training during Precision Strike Weapons (PSW) tests in the Gulf of Mexico (GOM), a military readiness activity, has been issued to Eglin Air Force Base (AFB).

DATES: This authorization is effective from March 19, 2008, through March 18, 2009.

ADDRESSES: The application and LOA are available for review in the Permits, Conservation, and Education Division, Office of Protected Resources, NMFS, 1315 East-West Highway, Silver Spring, MD 20910 or by contacting one of the individuals mentioned below (See **FOR FURTHER INFORMATION CONTACT**).

FOR FURTHER INFORMATION CONTACT: Kenneth Hollingshead or Candace Nachman, NMFS, (301) 713–2289.

SUPPLEMENTARY INFORMATION:

Background

Section 101(a)(5)(A) of the MMPA (16 U.S.C. 1361 *et seq.*) directs NMFS to allow, upon request, the incidental, but not intentional, taking of small numbers of marine mammals by U.S. citizens who engage in a specified activity (other than commercial fishing) within a specified geographical region, if certain findings are made by NMFS and regulations are issued. Under the MMPA, the term ''taking'' means to harass, hunt, capture, or kill or to attempt to harass, hunt, capture or kill marine mammals.

Authorization, in the form of annual LOAs, may be granted for periods up to five years if NMFS finds, after notification and opportunity for public comment, that the taking will have a negligible impact on the species or stock(s) of marine mammals and will not have an unmitigable adverse impact on the availability of the species or stock(s) for subsistence uses. In addition, NMFS must prescribe regulations that include permissible methods of taking and other means effecting the least practicable adverse impact on the species and its habitat, and on the availability of the species for subsistence uses, paying particular attention to rookeries, mating grounds, and areas of similar significance. The regulations must include requirements pertaining to the monitoring and reporting of such taking. Regulations governing the taking of marine mammals incidental to PSW testing and training within the Eglin Gulf Test and Training Range in the GOM, were published on November 24, 2006 (71 FR 67810), and remain in effect from December 26, 2006, through December 27, 2011. The four species that Eglin AFB may take in small numbers during PSW testing and training are Atlantic bottlenose dolphins (*Tursiops truncatus*), Atlantic spotted dolphins (*Stenella frontalis*), dwarf sperm whales (*Kogia simus*), and pygmy sperm whales (*Kogia breviceps*).

Issuance of the annual LOA to Eglin AFB is based on findings made in the preamble to the final rule that the total takings by this project would result in no more than a negligible impact on the affected marine mammal stocks or habitats and would not have an unmitigable adverse impact on subsistence uses of marine mammals. NMFS also finds that the applicant will meet the requirements contained in the implementing regulations and LOA, including monitoring and reporting requirements. Without any mitigation measures, a small possibility exists for one bottlenose dolphin and one spotted dolphin to be exposed to blast levels from the PSW testing sufficient to cause mortality. Additionally, less than two cetaceans might be exposed to noise levels sufficient to induce Level A harassment (injury) annually, and as few as 31 or as many as 52 cetaceans (depending on the season and water depth) could potentially be exposed (annually) to noise levels sufficient to induce Level B harassment in the form of temporary (auditory) threshold shift (TTS).

While none of these impact estimates consider the proposed mitigation measures that will be employed by Eglin AFB to minimize potential impacts to protected species, NMFS has authorized Eglin AFB a total of one mortality, two takes by Level A harassment, and 53 takes by Level B harassment (temporary auditory threshold shift) annually. However, the proposed mitigation measures described in the final rule (71 FR 67810, November 24, 2006) and the LOA are anticipated to reduce potential impacts to marine mammals in both numbers and degree of severity. These measures include a conservative safety range for marine mammal exclusion; incorporation of aerial and shipboard survey monitoring efforts in the program both prior to and after detonation of explosives; and a prohibition on detonations whenever marine mammals are detected within the safety zone, may enter the safety zone at the time of detonation, or if weather and sea conditions preclude adequate aerial surveillance. This LOA may be renewed annually based on a review of the activity, completion of monitoring requirements, and receipt of reports required by the LOA.

Summary of Request

NMFS received a request for a LOA pursuant to the aforementioned regulations that would authorize, for a period not to exceed 1 year, take of marine mammals, by harassment, incidental to PSW testing and training in the GOM.

Summary of Activity and Monitoring Under the Current LOA

In 2007, only one Focused Lethality Munition, a low collateral variant of the Small Diameter Bomb, was released over the GOM on July 11, 2007. It was a single release of a Guided Test Vehicle (GTV) with an inert fuse. The GTV has no explosives. Because it was not a live PSW test and did not have any impacts to protected species, a survey plan was not included in Eglin AFB's report. The Joint Air-to-Surface Stand-off Missile program had no activity in 2007.

Authorization

The U.S. Air Force complied with the requirements of the 2007 LOA, and NMFS has determined that there was no take of marine mammals by the U.S. Air Force in 2007. Accordingly, NMFS has issued a LOA to Eglin AFB authorizing the take by harassment of marine mammals incidental to PSW testing and training in the EGTTR in the GOM. Issuance of this LOA is based on findings described in the preamble to the final rule (71 FR 67810, November 24, 2006) and supported by information contained in Eglin's 2008 request for a new LOA that the activities described under this LOA will not result in more than the incidental harassment of certain marine mammal species and will have a negligible impact on the affected species or stocks. The provision requiring that the activity not have an

unmitigable adverse impact on the availability of the affected species or stock for subsistence uses does not apply for this action.

Dated: March 19, 2008.

James H. Lecky,

Director, Office of Protected Resources, National Marine Fisheries Service.

[FR Doc. E8–5938 Filed 3–24–08; 8:45 am]

BILLING CODE 3510–22–S

DEPARTMENT OF DEFENSE

GENERAL SERVICES ADMINISTRATION

NATIONAL AERONAUTICS AND SPACE ADMINISTRATION

[OMB Control No. 9000–0113]

Federal Acquisition Regulation; Submission for OMB Review; Acquisition of Helium

AGENCIES: Department of Defense (DOD), General Services Administration (GSA), and National Aeronautics and Space Administration (NASA).

ACTION: Notice of request for comments regarding an extension to an existing OMB clearance (9000–0113).

SUMMARY: Under the provisions of the Paperwork Reduction Act of 1995 (44 U.S.C. Chapter 35), the Federal Acquisition Regulation (FAR) Secretariat will be submitting to the Office of Management and Budget (OMB) a request to review and approve an extension of a currently approved information collection requirement concerning acquisition of helium. A request for public comments was published in the **Federal Register** at 72 FR 67919 on December 3, 2007. No comments were received. This OMB clearance currently expires on May 31, 2008.

Public comments are particularly invited on: Whether this collection of information is necessary for the proper performance of functions of the FAR, and whether it will have practical utility; whether our estimate of the public burden of this collection of information is accurate, and based on valid assumptions and methodology; ways to enhance the quality, utility, and clarity of the information to be collected; and ways in which we can minimize the burden of the collection of information on those who are to respond, through the use of appropriate technological collection techniques or other forms of information technology.

DATES: Submit comments on or before April 24, 2008.

ADDRESSES: Submit comments regarding this burden estimate or any other aspect of this collection of information, including suggestions for reducing this burden to: FAR Desk Officer, OMB, Room 10102, NEOB, Washington, DC 20503, and a copy to the General Services Administration, FAR Secretariat (VPR), 1800 F Street, NW, Room 4035, Washington, DC 20405. Please cite OMB Control No. 9000–0113, Acquisition of Helium, in all correspondence.

FOR FURTHER INFORMATION CONTACT Mr. William Clark, Contract Policy Division, GSA (202) 219–1813.

SUPPLEMENTARY INFORMATION:

A. Purpose

The Helium Act (Pub. L. 86–777) (50 U.S.C. 167, *et seq.*) and the Department of the Interior's regulations (43 CFR part 3195) on purchase of helium are implemented in the FAR at Subpart 8.5.

The FAR requires contractors to purchase major helium requirements from Federal helium suppliers, to the extent that supplies are available. In addition, the Contractor is required to provide the Contracting Officer the following data within 10 days after the Contractor or subcontractor receives a delivery of helium from a Federal helium supplier: (1) The name of the supplier; (2) The amount of helium purchased; (3) The delivery date(s); and (4) The location where the helium was used. The information is used in administration of certain Federal contracts to ensure contractor compliance with contract clauses. The contracting officer must forward the information to the Department of Interior's Bureau of Land Management (BLM) within 45 days of the close of each fiscal quarter. The quarterly reports will help BLM verify refined helium sales made to Federal agencies by Federal helium suppliers. Without the information, the required use of Federal helium suppliers cannot be monitored and enforced effectively.

B. Annual Reporting Burden

Respondents: 26.
Responses Per Respondent: 1.
Total Responses: 26.
Hours Per Response: 1.
Total Burden Hours: 26.
Obtaining Copies of Proposals: Requesters may obtain a copy of the information collection documents from the General Services Administration, FAR Secretariat (VPR), Room 4035, 1800 F Street, Washington, DC 20405, telephone (202) 501–4755. Please cite OMB Control No. 9000–0113, Acquisition of Helium, in all correspondence.

Dated: March 17, 2008.

Al Matera,

Director, Office of Acquisition Policy.

[FR Doc. E8–5924 Filed 3–24–08; 8:45 am]

BILLING CODE 6820–EP–S

DEPARTMENT OF EDUCATION

Office of Elementary and Secondary Education; Notice Extending the Deadline Date for Transmittal of Part II Applications and the Deadline Date for Intergovernmental Review for the Indian Education Formula Grants to Local Educational Agencies (LEAs) Program for Fiscal Year (FY) 2008

Catalog of Federal Domestic Assistance (CFDA) Number: 84.060A.

SUMMARY: On December 19, 2007, we published in the **Federal Register** (72 FR 71880) a notice inviting applications for Part I and Part II of the Formula Grant Electronic Application System for Indian Education (EASIE). The December 19, 2007 notice established an April 4, 2008 deadline date for eligible applicants to apply for funding under Part II of the Formula Grants to LEAs program, and provided that applications or data submissions under Part II would be accepted only from those eligible applicants who met the Part I deadline of January 31, 2008. We are extending the Part II application deadline date to April 23, 2008, for those eligible applicants who met the Part I deadline of January 31, 2008. The change in the deadline date for Part II applications is due to the unavailability of the application system for Part II during the dates published in the **Federal Register**. As a result of this extension of the deadline date for Part II applications, we also are extending the intergovernmental review period required under Executive Order 12372 to July 23, 2008. Applicants must refer to the Application Notice for all other requirements concerning this program.

DATES: *Part II of Formula Grant EASIE Applications Available:* March 21, 2008.

Deadline for Transmittal of Part II Applications: April 23, 2008.

Deadline for Intergovernmental Review: July 23, 2008.

FOR FURTHER INFORMATION CONTACT: Contact the ED*Facts* Partner Support Center, telephone: 877–457–3336 (877–HLP–EDEN) or by e-mail at: *eden_OIE@ed.gov*.

If you use a telecommunications device for the deaf (TDD), call the ED*Facts* Partner Support Center, toll free, at 1–888–403–3336 (888–403–EDEN).

Individuals with disabilities can obtain this document and a copy of the application package in an alternative format (*e.g.*, Braille, large print, audiotape, or computer diskette) by contacting the EDFacts Partner Support Center.

SUPPLEMENTARY INFORMATION: Applications for Part II of the Formula Grants to LEAs program must be submitted electronically through the Formula Grant EASIE unless you do not have Internet access and have made prior arrangements with the Department. For approval to submit a paper application, you must contact the ED*Facts* Partner Support Center (see the contact information listed elsewhere in this notice under **FOR FURTHER INFORMATION CONTACT**) prior to the deadline for transmittal of Part II applications. If you are approved to submit a paper application, you must meet the transmittal deadlines included in this notice.

Part II, Program and Budget Information, provides your award amount based on the Indian student count total submitted under Part I. Part II also enables you to enter student performance data, identify your project's services and activities, and build a realistic program budget based on a known grant amount. Based on student assessment data, you will select your program objectives and services from a variety of menu options that were designed with grantee input.

Electronic Access to This Document

You can view this document, as well as all other documents of this Department published in the **Federal Register**, in text or Adobe Portable Document Format (PDF) on the Internet at the following site: *http://www.ed.gov/news/fedregister.*

To use PDF you must have Adobe Acrobat Reader, which is available free at this site. If you have questions about using PDF, call the U.S. Government Printing Office (GPO), toll free, at 1–888–293–6498; or in the Washington, DC, area at (202) 512–1530.

Note: The official version of this document is the document published in the **Federal Register**. Free Internet access to the official edition of the **Federal Register** and the Code of Federal Regulations is available on GPO Access at: *http://www.gpoaccess.gov/nara/index.html.*

Program Authority: 20 U.S.C. 7421 *et seq.*

Dated: March 20, 2008.

Kerri L. Briggs,

Assistant Secretary for Elementary and Secondary Education.

[FR Doc. E8–6064 Filed 3–24–08; 8:45 am]

BILLING CODE 4000–01–P

DEPARTMENT OF EDUCATION

Office of Special Education and Rehabilitative Services; Overview Information; Technical Assistance and Dissemination To Improve Services and Results for Children With Disabilities—State Technical Assistance Projects To Improve Services and Results for Children Who Are Deaf-Blind; Notice Inviting Applications for New Awards for Fiscal Year (FY) 2008

Catalog of Federal Domestic Assistance (CFDA) Number: 84.326C.

DATES: *Applications Available:* March 25, 2008.

Deadline for Transmittal of Applications: April 24, 2008.

Deadline for Intergovernmental Review: June 23, 2008.

Full Text of Announcement

I. Funding Opportunity Description

Purpose of Program: The purpose of the Technical Assistance and Dissemination To Improve Services and Results For Children With Disabilities program is to promote academic achievement and to improve results for children with disabilities by providing technical assistance (TA), supporting model demonstration projects, disseminating useful information, and implementing activities that are supported by scientifically based research.

Priority: In accordance with 34 CFR 75.105(b)(2)(v), this priority is from allowable activities specified in the statute or otherwise authorized in the statute (see sections 663 and 681(d) of the Individuals with Disabilities Education Act (IDEA), 20 U.S.C. 1400 *et seq.*).

Absolute Priority: For FY 2008 and any subsequent year in which we make awards based on the list of unfunded applicants from this competition, this priority is an absolute priority. Under 34 CFR 75.105(c)(3), we consider only applications that meet this priority.

This priority is:

Technical Assistance and Dissemination To Improve Services and Results for Children With Disabilities—State Technical Assistance Projects To Improve Services and Results for Children Who Are Deaf-Blind

Background

Children who are deaf-blind represent one of the lowest incidence and most diverse groups of learners receiving early intervention, special education, and related services (Muller, 2006). In addition to having combined hearing and vision loss, 90 percent of these children experience concomitant physical or intellectual disabilities and may experience complex medical and behavioral challenges (Killoran, 2007).

Children who are deaf-blind are often isolated and disconnected from people and activities in their homes, schools, and communities both because they cannot access visual and auditory information and because they are not given the individualized supports necessary to access this information. Without individualized supports to access visual and auditory information (i.e., environmental information, such as who is present, what is being said, and what activities are occurring), children who are deaf-blind are at greater risk for not attaining age-appropriate milestones in communication and language, social skills, and activities of daily living, which in turn affects their educational outcomes. Consequently, students who are deaf-blind often exit school at age 22 without viable postsecondary education, employment, or independent living options.

Most State educational agencies (SEAs), Part C State lead agencies, and local educational agencies (LEAs) lack sufficient numbers of personnel with the specialized training, experience, and skills that are needed to provide appropriate early intervention, special education, and related services to children who are deaf-blind (Collins, 1992; Markowitz, 2001; McLetchie, 1992). The critical shortage of personnel to serve children who are deaf-blind can limit access to a free appropriate public education for these children.

Since its inception, the Office of Special Education Programs (OSEP) has funded technical assistance (TA) projects and personnel preparation programs to build State and local capacity to serve children who are deaf-blind and their families. As a result of those projects and programs, professionals, advocates, individuals who are deaf-blind, and parents have collaborated to make progress in identifying evidence-based intervention practices for children who are deaf-blind, developing high-quality training materials and resources, and developing networks across States to share information (Killorin, Davies, & McNulty, 2006). However, the National Deaf-Blind Child Count Registry data show that eighty-five percent of school-age children receive their services in separate settings. More work is needed to ensure that early intervention, special and regular education, and related services personnel have adequate skills to appropriately serve infants and toddlers in natural environments, which may include home and community

settings, and school-age children in the least restrictive environment (Warner, 2007). Under this priority, the projects to be funded will create or strengthen collaborative partnerships among families, SEAs, State lead agencies, and LEAs to enhance services and improve outcomes for children who are deaf-blind. Projects will assist SEAs, State lead agencies, and LEAs in ensuring that children served under Part C of IDEA who are deaf-blind receive services, to the maximum extent appropriate, in natural environments, and children served under Part B of IDEA who are deaf-blind have access to, and are involved and make progress in, the general education curriculum in the least restrictive environment.

Priority:

The purpose of this priority is to support the establishment and operation of State Technical Assistance Projects To Improve Services and Results for Children Who Are Deaf-Blind (projects). Grants are available to support projects in all States, the Virgin Islands, and the outlying areas and the Freely Associated States (FAS) of the Pacific Basin. Funds awarded under this priority may not be used to provide direct early intervention services under Part C of IDEA, or direct special education and related services under Part B of IDEA.

To be considered for funding under this absolute priority, applicants must meet the application requirements contained in this priority. All projects funded under this absolute priority also must meet the programmatic and administrative requirements specified in the priority.

Application Requirements. An applicant must include in its application—

(a) A logic model that depicts, at a minimum, the goals, activities, outputs, and outcomes of the proposed project. A logic model communicates how a project will achieve its outcomes and provides a framework for both the formative and summative evaluations of the project;

Note: For more information on logic models, the following Web site lists multiple online resources: *http://www.cdc.gov/eval/resources.htm.*

(b) A plan to implement the activities described in the *Project Activities* section of this priority;

(c) A plan, linked to the proposed project's logic model, for a formative evaluation of the proposed project's activities. The plan must describe how the formative evaluation will use clear performance objectives to ensure continuous improvement in the operation of the proposed project, including objective measures of progress in implementing the project and ensuring the quality of products and services; and

(d) A budget for attendance at the following:

(1) A four-day Project Directors' Conference in Washington, DC, during each year of the project period.

(2) A three-day National Consortium on Deaf-Blindness Annual Topical Conference during each year of the project period.

Project Activities. To meet the requirements of this priority, the project, at a minimum, must conduct the following activities:

Technical Assistance and Dissemination Activities

(a) Facilitate collaborative partnerships between family members of children who are deaf-blind; early intervention, special and regular education, and related services personnel; and SEAs, LEAs, and State lead agencies to develop and implement individualized supports that improve children's outcomes and educational achievement.

(b) Provide information and TA, including distance learning activities and ongoing professional development opportunities paired with on-site coaching, to family members of children who are deaf-blind and early intervention, special and regular education, and related services personnel working with children who are deaf-blind. Information and TA must focus on helping family members and early intervention, special and regular education, and related services personnel—

(1) Identify developmental and educational milestones;

(2) Develop age-appropriate Individualized Family Service Plans and standards-based Individualized Education Programs, which include measurable postsecondary goals for students no later than the age of 16;

(3) Use children's interests, preferences, and learning characteristics to support learning and development;

(4) Use evidence-based practices to increase children's communication, language, concept development, social interactions, and adaptive behaviors, thereby improving early intervention and educational outcomes;

(5) Use assistive and instructional technologies to maintain or improve children's functional and educational capabilities; and

(6) Increase children's access to and participation in natural environments, which may include home and community settings, and age-appropriate activities-based routines for those served under Part C of IDEA, and access to, and participation and progress in, the general education curriculum in the least restrictive environment for those served under Part B of IDEA.

(c) Work with families, SEAs, State lead agencies, LEAs, and institutions of higher education (IHEs) to use information from the National Consortium on Deaf-Blindness and other appropriate sources to develop—

(1) A shared understanding across the stakeholder groups of how to support children who are deaf-blind within local systems and communities;

(2) A plan that addresses the professional development needs of personnel who serve children who are deaf-blind, including paraprofessionals who serve as interveners. An ''intervener'' is an individual who has received specialized training to assist children who are deaf-blind by (a) facilitating access to environmental information, such as who is present, what is being said, and what activities are occurring, (b) supporting their development and use of communication skills, and (c) promoting their social and emotional well-being by maintaining a trusting and interactive relationship (Alsop, Blaha, & Kloos, 2000). For further information regarding interveners see: *http://www.nationaldb.org/ISSelectedTopics.php?topicCatID=10);* and

(3) Program improvement strategies for the State Performance Plans and Annual Performance Reports and local program and school improvement activities.

(d) Work with SEAs, LEAs, State lead agencies and, as appropriate, IHEs to implement the professional development plan.

(e) If the project maintains a Web site, ensure that it meets government or industry-recognized standards for accessibility and links to the Web site operated by the Technical Assistance Coordination Center, which OSEP intends to fund in FY 2008.

Leadership and Coordination Activities

(a) Communicate and collaborate, on an ongoing basis, with the National Consortium on Deaf-Blindness (NCDB) and ensure that the project's staff is aware of NCDB's resources, products, and services that may be used in its training and TA activities.

(b) Communicate and collaborate, on an ongoing basis, with OSEP-funded projects, including Parent Training and Information Centers; the Postsecondary Education Programs Network; the

National Instructional Materials Accessibility Standard Development and Technical Assistance Centers; Bookshare.org for Education, the Center for the Production and Dissemination of Educational Materials in Accessible Formats for Students with Visual Impairments and Other Print Disabilities; the Center for Implementing Technology in Education; the Family Center on Technology and Disability; the National Center for Technology Innovation; the Regional Resource Centers; the National Center for Leadership in Vision Impairment; and low-incidence personnel development projects. This collaboration could include the coordination of TA services, the planning and carrying out of TA meetings and events, and possible joint development of products.

(c) Though product development should not be a primary function of this project, if the project identifies an emerging need for a product (*e.g.*, print materials, DVDs, videos), submit a proposal describing the content and purpose of the product prior to development to the OSEP Project Officer.

(d) Participate in, organize, or facilitate, as appropriate, OSEP communities of practice (*http://www.tacommunities.org*) that are aligned with the project's objectives as a way to support discussions and collaboration among key stakeholders.

(e) Contribute, on an ongoing basis, updated information on the project's services to OSEP's Technical Assistance and Dissemination Matrix (*http://matrix.rrfcnetwork.org*), which provides current information on Department-funded TA services to a range of stakeholders.

(f) Maintain ongoing communication with the OSEP Project Officer through regular phone conversations and e-mail communication.

References

Alsop, L., Blaha, R., & Kloos, E. (2000). *The intervener in early intervention and educational settings for children and youth with deafblindness* (Briefing Paper). Monmouth, OR: The National Technical Assistance Consortium for Children and Young Adults Who Are Deaf-Blind.

Collins, M. T. (1992). Educational Services. In J.W. Reiman & P.A. Johnson (Eds.), *Proceedings from the National Symposium on Children and Youth Who Are Deaf Blind* (pp. 165–178). Monmouth, OR: Teaching Research Publications.

Killoran, J. (2007). *The national deaf-blind child count: 1998–2005 in review.* Monmouth, OR: National Consortium on Deaf-Blindness. Retrieved December 27, 2007, from *http://www.nationaldb.org/documents/products/Childcountreview0607Final.pdf.*

Killorin, J., Davies, P., & McNulty, K. (August 2006). The NTAC Outcomes and Performance Indicators: A System for Documenting Outcomes for Children and Youth with Deaf-Blindness, their Families, and the Service Providers and Systems that Serve Them. Western Oregon University Monmouth, OR. Retrieved December 27, 2007, from *http://tr.wou.edu/ntac/index.cfm?path=publications/publications_index.html.*

Markowitz, J. (April 2001). Personnel to Support the Education of Children and Youth with Deafblindness. Alexandria, VA: Project Forum.

McLetchie, B.A.B. (1992) Personnel Preparation. In J.W. Reiman & P.A. Johnson (Eds.), *Proceedings from the National Symposium on Children and Youth Who Are Deaf Blind* (pp. 203–219). Monmouth, OR: Teaching Research Publications.

Muller, E. (2006, July). Deaf-blind child counts: Issues and challenges. *Alexandria, VA: Project Forum.*

Warner, R. (2007, February). *The Real Deal.* Presentation at the conference Deafblindness: A Real Vision, Hampton, VA.

Waiver of Proposed Rulemaking: Under the Administrative Procedure Act (APA) (5 U.S.C. 553), the Department generally offers interested parties the opportunity to comment on proposed priorities and requirements. Section 681(d) of IDEA, however, makes the public comment requirements of the APA inapplicable to the priority in this notice.

Program Authority: 20 U.S.C. 1463 and 1481.

Applicable Regulations: The Education Department General Administrative Regulations (EDGAR) in 34 CFR parts 74, 75, 77, 79, 80, 81, 82, 84, 85, 86, 97, 98, and 99.

Note: The regulations in 34 CFR part 79 apply to all applicants except federally recognized Indian tribes.

Note: The regulations in 34 CFR part 86 apply to IHEs only.

II. Award Information

Type of Award: Discretionary grants.

Estimated Available Funds: $9,500,000. Please refer to the ''Funding Level'' column in the chart shown in the Maximum Awards section of this notice for the estimated dollar amounts for individual awards.

Estimated Range of Awards: $30,000–$575,000.

Estimated Average Size of Awards: $176,000.

Maximum Awards: The following chart lists the maximum amount of funds for individual States for a single budget period of 12 months. A State may be served by only one supported project. In determining the maximum funding levels for each State the Secretary considered, among other things, the following factors:

(1) The total number of children from birth through age 21 in the State.

(2) The number of people in poverty in the State.

(3) The previous funding levels.

(4) The maximum and minimum funding amounts.

2008 FUNDING LEVELS FOR CFDA NO. 84.326C

State	Funding level	State	Funding level
AK	$106,971	ND	65,000
AL	185,095	NE	78,471
AR	118,534	NH	65,807
AZ	175,338	NJ	268,086
CA	575,000	NM	100,912
CO	154,079	NY	575,000
CT	104,751	NV	112,563
DE	83,362	OH	259,320
FL	362,027	OK	131,374
GA	305,978	OR	121,286
HI	77,491	PA	371,952
IA	97,054	PR	65,000
ID	85,303	RI	79,368
IL	335,444	SC	154,204

2008 FUNDING LEVELS FOR CFDA NO. 84.326C—Continued

State	Funding level	State	Funding level
IN	210,093	SD	101,746
KS	128,122	TN	238,451
KY	165,145	TX	575,000
LA	145,840	UT	92,039
MA	126,661	VA	234,082
MD	164,366	VT	114,301
ME	65,000	WA	195,750
MI	256,289	WI	173,484
MN	171,335	WV	125,020
MO	197,129	WY	65,000
MS	133,605	DC	65,000
MT	106,123	Pacific **	92,000
NC	313,649	VI	30,000

**The areas to be served by this award are the outlying areas of American Samoa, Guam, and the Commonwealth of the Northern Mariana Islands as well as the Freely Associated States of the Republic of the Marshall Islands, the Federated States of Micronesia, and the Republic of Palau. An applicant for this award must propose to serve all of these areas. We will reject an application for a State project that proposes a budget exceeding the funding level for any single budget period of 12 months. An applicant may apply for more than one State project award; however a separate application must be submitted for each State project. We will reject an application that proposes to serve more than one State or area specified in the chart above.

The Assistant Secretary for Special Education and Rehabilitative Services may change the maximum amount through a notice published in the **Federal Register.**

Estimated Number of Awards: 54.

Note: The Department is not bound by any estimates in this notice.

Project Period: Up to 60 months.

III. Eligibility Information

1. *Eligible Applicants:* SEAs; LEAs, including public charter schools that are considered LEAs under State law; IHEs; other public agencies; private nonprofit organizations; outlying areas; FAS; Indian tribes or tribal organizations; and for-profit organizations.

2. *Cost Sharing or Matching:* This competition does not require cost sharing or matching.

3. *Other: General Requirements*—(a) The projects funded under this competition must make positive efforts to employ and advance in employment qualified individuals with disabilities (see section 606 of IDEA).

(b) Applicants and grant recipients funded under this competition must involve individuals with disabilities or parents of individuals with disabilities ages birth through 26 in planning, implementing, and evaluating the projects (see section 682(a)(1)(A) of IDEA).

IV. Application and Submission Information

1. *Address to Request Application Package:* Education Publications Center (ED Pubs), P.O. Box 1398, Jessup, MD 20794–1398. Telephone, toll free: 1–877–433–7827. FAX: (301) 470–1244. If you use a telecommunications device for the deaf (TDD), call, toll free: 1–877–576–7734.

You can contact ED Pubs at its Web site, also: *http://www.ed.gov/pubs/edpubs.html* or at its e-mail address: *edpubs@inet.ed.gov.*

If you request an application package from ED Pubs, be sure to identify this program or competition as follows:

CFDA Number 84.326C.

Individuals with disabilities can obtain a copy of the application package in an alternative format (e.g., Braille, large print, audiotape, or computer diskette) by contacting the person or team listed under *Alternate Format* in section VIII of this notice.

2. *Content and Form of Application Submission:* Requirements concerning the content of an application, together with the forms you must submit, are in the application package for this competition. Page Limit: The application narrative (Part III of the application) is where you, the applicant, address the selection criteria that reviewers use to evaluate your application. You must limit the application narrative to the equivalent of no more than 70 pages, using the following standards:

- A ''page'' is 8.5″ x 11″, on one side only, with 1″ margins at the top, bottom, and both sides.
- Double space (no more than three lines per vertical inch) all text in the application narrative, including titles, headings, footnotes, quotations, references, and captions, as well as all text in charts, tables, figures, and graphs.
- Use a font that is either 12 point or larger, or no smaller than 10 pitch (characters per inch).

The page limit does not apply to Part I, the cover sheet; Part II, the budget section, including the narrative budget justification; Part IV, the assurances and certifications; or the one-page abstract, the resumes, the bibliography, the references, or the letters of support. The page limit, however, does apply to the application narrative in Part III.

We will reject your application if you exceed the page limit or if you use other standards and exceed the equivalent of the page limit.

3. *Submission Dates and Times:* Applications Available: March 25, 2008. Deadline for Transmittal of Applications: April 24, 2008.

Applications for grants under this program may be submitted electronically using the Grants.gov Apply site (Grants.gov), or in paper format by mail or hand delivery. For information (including dates and times) about how to submit your application electronically, or in paper format by mail or hand delivery, please refer to section IV.6. *Other Submission Requirements* in this notice.

We do not consider an application that does not comply with the deadline requirements.

Individuals with disabilities who need an accommodation or auxiliary aid in connection with the application process should contact the person listed under **FOR FURTHER INFORMATION CONTACT** in section VII in this notice. If the Department provides an accommodation or auxiliary aid to an individual with a disability in connection with the application

process, the individual's application remains subject to all other requirements and limitations in this notice.

Deadline for Intergovernmental Review: June 23, 2008.

4. *Intergovernmental Review:* This competition is subject to Executive Order 12372 and the regulations in 34 CFR part 79. Information about Intergovernmental Review of Federal Programs under Executive Order 12372 is in the application package for this competition.

5. *Funding Restrictions:* We reference regulations outlining funding restrictions in the *Applicable Regulations* section in this notice.

6. *Other Submission Requirements:* Applications for grants under this program may be submitted electronically or in paper format by mail or hand delivery.

a. Electronic Submission of Applications.

To comply with the President's Management Agenda, we are participating as a partner in the Governmentwide Grants.gov Apply site. The State Technical Assistance Projects To Improve Services and Results for Children Who Are Deaf-Blind competition, CFDA Number 84.326C, is included in this project. We request your participation in Grants.gov.

If you choose to submit your application electronically, you must use the Governmentwide Grants.gov Apply site at *http://www.Grants.gov.* Through this site, you will be able to download a copy of the application package, complete it offline, and then upload and submit your application. You may not e-mail an electronic copy of a grant application to us.

You may access the electronic grant application for the State Technical Assistance Projects To Improve Services and Results for Children Who Are Deaf-Blind competition at *http://www.Grants.gov.* You must search for the downloadable application package for this competition by the CFDA number. Do not include the CFDA number's alpha suffix in your search (e.g., search for 84.326, not 84.326C).

Please note the following:

- Your participation in Grants.gov is voluntary.
- When you enter the Grants.gov site, you will find information about submitting an application electronically through the site, as well as the hours of operation.
- Applications received by Grants.gov are date and time stamped. Your application must be fully uploaded and submitted and must be date and time stamped by the Grants.gov system no later than 4:30 p.m., Washington, DC time, on the application deadline date. Except as otherwise noted in this section, we will not consider your application if it is date and time stamped by the Grants.gov system later than 4:30 p.m., Washington, DC time, on the application deadline date. When we retrieve your application from Grants.gov, we will notify you if we are rejecting your application because it was date and time stamped by the Grants.gov system after 4:30 p.m., Washington, DC time, on the application deadline date.
- The amount of time it can take to upload an application will vary depending on a variety of factors, including the size of the application and the speed of your Internet connection. Therefore, we strongly recommend that you do not wait until the application deadline date to begin the submission process through Grants.gov.
- You should review and follow the Education Submission Procedures for submitting an application through Grants.gov that are included in the application package for this competition to ensure that you submit your application in a timely manner to the Grants.gov system. You can also find the Education Submission Procedures pertaining to: Grants.gov at *http://e-Grants.ed.gov/help/GrantsgovSubmissionProcedures.pdf.*
- To submit your application via Grants.gov, you must complete all steps in the Grants.gov registration process (see *http://www.grants.gov/applicants/get_registered.jsp*). These steps include (1) Registering your organization, a multi-part process that includes registration with the Central Contractor Registry (CCR); (2) registering yourself as an Authorized Organization Representative (AOR); and (3) getting authorized as an AOR by your organization. Details on these steps are outlined in the Grants.gov 3-Step Registration Guide (see *http://www.grants.gov/section910/Grants.govRegistrationBrochure.pdf).* You also must provide on your application the same D–U–N–S Number used with this registration. Please note that the registration process may take five or more business days to complete, and you must have completed all registration steps to allow you to submit successfully an application via Grants.gov. In addition you will need to update your CCR registration on an annual basis. This may take three or more business days to complete.
- You will not receive additional point value because you submit your application in electronic format, nor will we penalize you if you submit your application in paper format.
- If you submit your application electronically, you must submit all documents electronically, including all information you typically provide on the following forms: Application for Federal Assistance (SF 424), the Department of Education Supplemental Information for SF 424, Budget Information—Non-Construction Programs (ED 524), and all necessary assurances and certifications. Please note that two of these forms—the SF 424 and the Department of Education Supplemental Information for SF 424—have replaced the ED 424 (Application for Federal Education Assistance).
- If you submit your application electronically, you must attach any narrative sections of your application as files in a .DOC (document), .RTF (rich text), or .PDF (Portable Document) format. If you upload a file type other than the three file types specified in this paragraph or submit a password-protected file, we will not review that material.
- Your electronic application must comply with any page-limit requirements described in this notice.
- After you electronically submit your application, you will receive from Grants.gov an automatic notification of receipt that contains a Grants.gov tracking number. (This notification indicates receipt by Grants.gov only, not receipt by the Department.) The Department then will retrieve your application from Grants.gov and send a second notification to you by e-mail. This second notification indicates that the Department has received your application and has assigned your application a PR/Award number (an ED-specified identifying number unique to your application).
- We may request that you provide us original signatures on forms at a later date.

Application Deadline Date Extension in Case of Technical Issues with the Grants.gov System: If you are experiencing problems submitting your application through Grants.gov, please contact the Grants.gov Support Desk, toll free, at 1–800–518–4726. You must obtain a Grants.gov Support Desk Case Number and must keep a record of it.

If you are prevented from electronically submitting your application on the application deadline date because of technical problems with the Grants.gov system, we will grant you an extension until 4:30 p.m., Washington, DC time, the following business day to enable you to transmit your application electronically or by hand delivery. You also may mail your

application by following the mailing instructions described elsewhere in this notice.

If you submit an application after 4:30 p.m., Washington, DC time, on the application deadline date, please contact the person listed under **FOR FURTHER INFORMATION CONTACT** in section VII in this notice and provide an explanation of the technical problem you experienced with Grants.gov, along with the Grants.gov Support Desk Case Number. We will accept your application if we can confirm that a technical problem occurred with the Grants.gov system and that that problem affected your ability to submit your application by 4:30 p.m., Washington, DC time, on the application deadline date. The Department will contact you after a determination is made on whether your application will be accepted.

Note: The extensions to which we refer in this section apply only to the unavailability of, or technical problems with, the Grants.gov system. We will not grant you an extension if you failed to fully register to submit your application to Grants.gov before the application deadline date and time or if the technical problem you experienced is unrelated to the Grants.gov system.

b. Submission of Paper Applications by Mail

If you submit your application in paper format by mail (through the U.S. Postal Service or a commercial carrier), you must mail the original and two copies of your application, on or before the application deadline date, to the Department at the applicable following address: *By mail through the U.S. Postal Service:* U.S. Department of Education, Application Control Center, Attention: (CFDA Number 84.326C), 400 Maryland Avenue, SW., Washington, DC 20202–4260; or *By mail through a commercial carrier:* U.S. Department of Education, Application Control Center, Stop 4260, Attention: (CFDA Number 84.326C), 7100 Old Landover Road, Landover, MD 20785–1506.

Regardless of which address you use, you must show proof of mailing consisting of one of the following:

(1) A legibly dated U.S. Postal Service postmark.

(2) A legible mail receipt with the date of mailing stamped by the U.S. Postal Service.

(3) A dated shipping label, invoice, or receipt from a commercial carrier.

(4) Any other proof of mailing acceptable to the Secretary of the U.S. Department of Education.

If you mail your application through the U.S. Postal Service, we do not accept either of the following as proof of mailing:

(1) A private metered postmark.

(2) A mail receipt that is not dated by the U.S. Postal Service.

If your application is postmarked after the application deadline date, we will not consider your application.

Note: The U.S. Postal Service does not uniformly provide a dated postmark. Before relying on this method, you should check with your local post office.

c. Submission of Paper Applications by Hand Delivery

If you submit your application in paper format by hand delivery, you (or a courier service) must deliver the original and two copies of your application by hand, on or before the application deadline date, to the Department at the following address: U.S. Department of Education, Application Control Center, Attention: (CFDA Number 84.326C), 550 12th Street, SW., Room 7041, Potomac Center Plaza, Washington, DC 20202–4260.

The Application Control Center accepts hand deliveries daily between 8 a.m. and 4:30 p.m., Washington, DC time, except Saturdays, Sundays, and Federal holidays.

Note for Mail or Hand Delivery of Paper Applications: If you mail or hand deliver your application to the Department—

(1) You must indicate on the envelope and—if not provided by the Department—in Item 11 of the SF 424 the CFDA number, including suffix letter, if any, of the competition under which you are submitting your application; and

(2) The Application Control Center will mail to you a notification of receipt of your grant application. If you do not receive this notification within 15 business days from the application deadline date, you should call the U.S. Department of Education Application Control Center at (202) 245–6288.

V. Application Review Information

1. *Selection Criteria:* The selection criteria for this competition are from 34 CFR 75.210 and are listed in the application package.

2. *Peer Review:* In the past, the Department has had difficulty finding peer reviewers for certain competitions because so many individuals who are eligible to serve as peer reviewers have conflicts of interest. The Standing Panel requirements under IDEA also have placed additional constraints on the availability of reviewers. Therefore, the Department has determined that, for some discretionary grant competitions, applications may be separated into two or more groups and ranked and selected for funding within the specific groups. This procedure will make it easier for the Department to find peer reviewers by ensuring that greater numbers of individuals who are eligible to serve as reviewers for any particular group of applicants will not have conflicts of interest. It also will increase the quality, independence, and fairness of the review process while permitting panel members to review applications under discretionary grant competitions for which they also have submitted applications. However, if the Department decides to select an equal number of applications in each group for funding, this may result in different cut-off points for fundable applications in each group.

VI. Award Administration Information

1. *Award Notices:* If your application is successful, we notify your U.S. Representative and U.S. Senators and send you a Grant Award Notice (GAN). We may notify you informally, also.

If your application is not evaluated or not selected for funding, we notify you.

2. *Administrative and National Policy Requirements:* We identify administrative and national policy requirements in the application package and reference these and other requirements in the *Applicable Regulations* section in this notice.

We reference the regulations outlining the terms and conditions of an award in the *Applicable Regulations* section in this notice and include these and other specific conditions in the GAN. The GAN also incorporates your approved application as part of your binding commitments under the grant.

3. *Reporting:* At the end of your project period, you must submit a final performance report, including financial information, as directed by the Secretary. If you receive a multi-year award, you must submit an annual performance report that provides the most current performance and financial expenditure information as directed by the Secretary under 34 CFR 75.118. The Secretary may also require more frequent performance reports under 34 CFR 75.720(c). For specific requirements on reporting, please go to *http://www.ed.gov/fund/grant/apply/appforms/appforms.html.*

4. *Performance Measures:* Under the Government Performance and Results Act of 1993 (GPRA), the Department has established a set of performance measures, including long-term measures, that are designed to yield information on various aspects of the effectiveness and quality of the Technical Assistance and Dissemination To Improve Services and Results for Children With Disabilities program. These measures focus on the extent to which projects provide high quality products and services, the relevance of

project products and services to educational and early intervention policy and practice, and the use of products and services to improve educational and early intervention policy and practice.

Grantees will be required to provide information related to these measures in annual reports to the Department.

Grantees also will be required to report information on their project's performance in annual reports to the Department (34 CFR 75.590).

VII. Agency Contact

FOR FURTHER INFORMATION CONTACT: Anne Smith, U.S. Department of Education, 400 Maryland Avenue, SW., Room 4066, Potomac Center Plaza (PCP), Washington, DC 20202–2550. Telephone: (202) 245–7529.

If you use a TDD, call the Federal Relay Service (FRS), toll-free, at 1–800–877–8339.

VIII. Other Information

Alternative Format: Individuals with disabilities can obtain this document and a copy of the application package in an alternative format (*e.g.*, Braille, large print, audiotape, or computer diskette) by contacting the Grants and Contracts Services Team, U.S. Department of Education, 400 Maryland Avenue, SW., room 5075, PCP, Washington, DC 20202–2550. Telephone: (202) 245–7363. If you use a TDD, call the FRS, toll free, at 1–800–877–8339.

Electronic Access to This Document: You can view this document, as well as all other documents of this Department published in the **Federal Register**, in text or Adobe Portable Document Format (PDF) on the Internet at the following site: *http://www.ed.gov/news/fedregister.*

To use PDF you must have Adobe Acrobat Reader, which is available free at this site. If you have questions about using PDF, call the U.S. Government Printing Office (GPO), toll free, at 1–888–293–6498; or in the Washington, DC, area at (202) 512–1530.

Note: The official version of this document is the document published in the **Federal Register**. Free Internet access to the official edition of the **Federal Register** and the Code of Federal Regulations is available on GPO Access at: *http://www.gpoaccess.gov/nara/index.html.*

Dated: March 19, 2008.

Tracy R. Justesen,

Assistant Secretary for Special Education and Rehabilitative Services.

[FR Doc. E8–6057 Filed 3–24–08; 8:45 am]

BILLING CODE 4000–01–P

DEPARTMENT OF ENERGY

Agency Information Collection Extension

AGENCY: U.S. Department of Energy.

ACTION: Notice and request for comments.

SUMMARY: The Department of Energy (DOE), pursuant to the Paperwork Reduction Act of 1995, intends to extend for three years, an information collection request with the Office of Management and Budget (OMB). Comments are invited on: (a) Whether the extended collection of information is necessary for the proper performance of the functions of the agency, including whether the information shall have practical utility; (b) the accuracy of the agency's estimate of the burden of the proposed collection of information, including the validity of the methodology and assumptions used; (c) ways to enhance the quality, and clarity of the information to be collected; and (d) ways to minimize the burden of the collection of information on respondents, including through the use of automated collection techniques or other forms of information technology.

DATES: Comments regarding this proposed information collection must be received on or before May 27, 2008. If you anticipate difficulty in submitting comments within that period, contact the person listed below as soon as possible.

ADDRESSES: Written comments may be sent to Robert J. Marchick, GC–62, U.S. Department of Energy, 1000 Independence Ave., SW., Washington, DC 20585.

FOR FURTHER INFORMATION CONTACT: Requests for additional information or copies of the information collection instrument and instructions should be directed to Robert J. Marchick at the address listed above.

SUPPLEMENTARY INFORMATION: This information collection request contains: (1) OMB No. 1910–0800; (2) Information Collection Request Title: Legal Collections; (3) Type of Review: Renewal; (4) Purpose: to continue to maintain DOE control and oversight of DOE contractor invention reporting and related matters; (5) Respondents: approx. 2160 respondents; (6) Estimated Number of Burden Hours: Approx. 16745 hours.

Statutory Authority: 42 U.S.C. 5908(a) and (b).

Issued in Washington, DC on March 19, 2008.

Robert J. Marchick,

Acting Assistant General Counsel for Technology Transfer and Intellectual Property, Office of General Counsel.

[FR Doc. E8–5990 Filed 3–24–08; 8:45 am]

BILLING CODE 6450–01–P

DEPARTMENT OF ENERGY

Agency Information Collection Extension

AGENCY: Department of Energy.

ACTION: Submission for Office of Management and Budget (OMB) review; comment request.

SUMMARY: The Department of Energy (DOE) has submitted an information collection request to the OMB for extension under the provisions of the Paperwork Reduction Act of 1995. The information collection requests a three-year extension of its Legal Collections, OMB Control Number 1910–0800. This information collection request covers information necessary to legal collections related to invention reporting by DOE contractors, and related matters. The information is used by DOE management to exercise management oversight with respect to the implementation of applicable statutory and contractual requirements and obligations.

DATES: Comments regarding this collection must be received on or before April 24, 2008. If you anticipate that you will be submitting comments, but find it difficult to do so within the period of time allowed by this notice, please advise the OMB Desk Officer of your intention to make a submission as soon as possible. The Desk Officer may be telephoned at 202–395–4650.

ADDRESSES: Written comments should be sent to the DOE Desk Officer, Office of Information and Regulatory Affairs, Office of Management and Budget, New Executive Office Building, Room 10102, 735 17th Street, NW., Washington, DC 20503, and to Robert Marchick, GC–62, U.S. Dept. of Energy, 1000 Independence Ave, SW., Washington, DC 20585.

FOR FURTHER INFORMATION CONTACT: Robert Marchick, at the address listed above.

SUPPLEMENTARY INFORMATION: This information collection request contains: (1) OMB No. 1910–0800; (2) Information Collection Request Title: Legal Collections; (3) Purpose: To continue to maintain DOE control and oversight of DOE and contractor invention reporting and related matters; (4) Estimated

Number of Respondents 2160; (5) Estimated Total Burden Hours: 16745; (6) Number of Collections: The information collection request contains 5 information and/or recordkeeping requirements.

Statutory Authority: 42 U.S.C. 5908 (a) and (b).

Issued in Washington, DC on March 19, 2008.

Robert J. Marchick,

Acting Assistant General Counsel for Technology Transfer and Intellectual Property, Office of General Counsel.

[FR Doc. E8–5992 Filed 3–24–08; 8:45 am]

BILLING CODE 6450–01–P

DEPARTMENT OF ENERGY

Environmental Management Site-Specific Advisory Board, Oak Ridge Reservation

AGENCY: Department of Energy.

ACTION: Notice of Open Meeting.

SUMMARY: This notice announces a meeting of the Environmental Management Site-Specific Advisory Board (EM SSAB), Oak Ridge Reservation. The Federal Advisory Committee Act (Pub. L. No. 92–463, 86 Stat. 770) requires that public notice of this meeting be announced in the **Federal Register**.

DATES: Wednesday, April 9, 2008, 6 p.m.

ADDRESSES: DOE Information Center, 475 Oak Ridge Turnpike, Oak Ridge, Tennessee.

FOR FURTHER INFORMATION CONTACT: Pat Halsey, Federal Coordinator, Department of Energy Oak Ridge Operations Office, P.O. Box 2001, EM–90, Oak Ridge, TN 37831. Phone (865) 576–4025; Fax (865) 576–2347 or e-mail: *halseypj@oro.doe.gov* or check the Web site at *http://www.oakridge.doe.gov/em/ssab.*

SUPPLEMENTARY INFORMATION:

Purpose of the Board: The purpose of the Board is to make recommendations to DOE in the areas of environmental restoration, waste management, and related activities.

Tentative Agenda: The main meeting topic will be on the ''White Oak Lake/Embayment and Bear Creek Valley Uranium Disposals.''

Public Participation: The meeting is open to the public. Written statements may be filed with the Board either before or after the meeting. Individuals who wish to make oral statements pertaining to the agenda item should contact Pat Halsey at the address or telephone number listed above. Requests must be received five days prior to the meeting and reasonable provision will be made to include the presentation in the agenda. The Deputy Designated Federal Officer is empowered to conduct the meeting in a fashion that will facilitate the orderly conduct of business. Individuals wishing to make public comment will be provided a maximum of five minutes to present their comments.

Minutes: Minutes will be available by writing or calling Pat Halsey at the address and phone number listed above. Minutes will also be available at the following Web site: *http://www.oakridge.doe.gov/em/ssab/minutes.htm.*

Issued at Washington, DC on March 20, 2008.

Rachel Samuel,

Deputy Committee Management Officer.

[FR Doc. E8–5987 Filed 3–24–08; 8:45 am]

BILLING CODE 6450–01–P

DEPARTMENT OF ENERGY

Federal Energy Regulatory Commission

[Project No. 12696–001]

Alaska Tidal Energy Company; Notice of Surrender of Preliminary Permit

March 19, 2008.

Take notice that Alaska Tidal Energy Company, permittee for the proposed Gastineau Channel Tidal Energy Project, has requested that its preliminary permit be terminated. The permit was issued on March 23, 2007, and would have expired on February 28, 2010.[1] The project would have been located in the Gastineau Channel in Juneau Borough, Alaska.

The permittee filed the request on March 13, 2008, and the preliminary permit for Project No. 12696 shall remain in effect through the thirtieth day after issuance of this notice unless that day is a Saturday, Sunday, part-day holiday that affects the Commission, or legal holiday as described in section 18 CFR 385.2007, in which case the effective date is the first business day following that day. New applications involving this project site, to the extent provided for under 18 CFR Part 4, may be filed on the next business day.

Kimberly D. Bose,

Secretary.

[FR Doc. E8–6022 Filed 3–24–08; 8:45 am]

BILLING CODE 6717–01–P

[1] 118 FERC ¶ 62,220.

DEPARTMENT OF ENERGY

Federal Energy Regulatory Commission

[Project No. 12735–001]

Midwest Hydraulic, Inc.; Notice of Surrender of Preliminary Permit

March 19, 2008.

Take notice that Midwest Hydraulic, Inc., permittee for the proposed Stebbinsville Hydroelectric Project, has requested that its preliminary permit be terminated. The permit was issued on March 8, 2007, and would have expired on February 28, 2010.[1] The project would have been located on the Yahara River in Rock County, Wisconsin.

The permittee filed the request on March 17, 2008, and the preliminary permit for Project No. 12735 shall remain in effect through the thirtieth day after issuance of this notice unless that day is a Saturday, Sunday, part-day holiday that affects the Commission, or legal holiday as described in section 18 CFR 385.2007, in which case the effective date is the first business day following that day. New applications involving this project site, to the extent provided for under 18 CFR Part 4, may be filed on the next business day.

Kimberly D. Bose,

Secretary.

[FR Doc. E8–6020 Filed 3–24–08; 8:45 am]

BILLING CODE 6717–01–P

DEPARTMENT OF ENERGY

Federal Energy Regulatory Commission

[Project No. 12672–003]

Oregon Tidal Energy Company; Notice of Surrender of Preliminary Permit

March 19, 2008.

Take notice that Oregon Tidal Energy Company, permittee for the proposed Columbia Tidal Energy Project, has requested that its preliminary permit be terminated. The permit was issued on March 23, 2007, and would have expired on February 28, 2010.[1] The project would have been located in the Pacific Ocean near the mouth of the Columbia River in Clatsop County, Oregon, and Wahkiakum and Pacific Counties, Washington.

The permittee filed the request on March 13, 2008, and the preliminary permit for Project No. 12672 shall remain in effect through the thirtieth

[1] 118 FERC ¶ 62,180.

[1] 118 FERC ¶ 62,222.

day after issuance of this notice unless that day is a Saturday, Sunday, part-day holiday that affects the Commission, or legal holiday as described in section 18 CFR 385.2007, in which case the effective date is the first business day following that day. New applications involving this project site, to the extent provided for under 18 CFR Part 4, may be filed on the next business day.

Kimberly D. Bose,

Secretary.

[FR Doc. E8–6023 Filed 3–24–08; 8:45 am]

BILLING CODE 6717–01–P

ENVIRONMENTAL PROTECTION AGENCY

[EPA–HQ–OW–2008–0150; FRL–8546–1]

Agency Information Collection Activities: Proposed Collection; Comment Request; Establishing No-Discharge Zones Under Clean Water Act Section 312; EPA ICR No.1791.08, OMB Control No. 2040–0187

AGENCY: Environmental Protection Agency.

ACTION: Notice.

SUMMARY: In compliance with the Paperwork Reduction Act (PRA) (44 U.S.C. 3501 *et seq.*), this document announces that EPA is planning to submit a request to renew an existing approved Information Collection Request (ICR) to the Office of Management and Budget (OMB). This ICR is scheduled to expire on June 30, 2008. Before submitting the ICR to OMB for review and approval, EPA is soliciting comments on specific aspects of the proposed information collection as described below.

DATES: Comments must be submitted on or before May 27, 2008.

ADDRESSES: Submit your comments, identified by Docket ID No. EPA–HQ–OW–2008–0150, by the following methods:

- *http://www.regulations.gov* Follow the on-line instructions for submitting comments.
- E-mail: *OW–Docket@epa.gov.*
- Mail: Water Docket, Environmental Protection Agency, Mailcode: 2822T, 1200 Pennsylvania Avenue, NW., Washington, DC 20460.
- Hand Delivery: EPA West, Room 3334, 1301 Constitution Avenue, NW., Washington, DC. Such deliveries are only accepted during the Docket's normal hours of operation, and special arrangements should be made for deliveries of boxed information.

Instructions: Direct your comments to Docket ID No. EPA–HQ–OW–2008–0150. EPA's policy is that all comments received will be included in the public docket without change and may be made available online at: *http://www.regulations.gov*, including any personal information provided, unless the comment includes information claimed to be Confidential Business Information (CBI) or other information whose disclosure is restricted by statute. Do not submit information that you consider to be CBI or otherwise protected through *http://www.regulations.gov* or e-mail. The *http://www.regulations.gov* Web site is an ''anonymous access'' system, which means EPA will not know your identity or contact information unless you provide it in the body of your comment. If you send an e-mail comment directly to EPA without going through *http://www.regulations.gov*, your e-mail address will be automatically captured and included as part of the comment that is placed in the public docket and made available on the Internet. If you submit an electronic comment, EPA recommends that you include your name and other contact information in the body of your comment and with any disk or CD–ROM you submit. If EPA cannot read your comment due to technical difficulties and cannot contact you for clarification, EPA may not be able to consider your comment. Electronic files should avoid the use of special characters, any form of encryption, and be free of any defects or viruses. For additional information about EPA's public docket visit the EPA Docket Center homepage at: *http://www.epa.gov/epahome/dockets.htm.*

FOR FURTHER INFORMATION CONTACT: Chris Laabs, Oceans and Coastal Protection Division, Environmental Protection Agency, 4504T, 1200 Pennsylvania Avenue, NW., Washington, DC 20460; telephone 202–566–1223; fax number: 202–566–1546; e-mail address: *laabs.chris@epa.gov.*

SUPPLEMENTARY INFORMATION:

How Can I Access the Docket and/or Submit Comments?

EPA has established a public docket for this ICR under Docket ID no. EPA–HQ–OW–2008–0150, which is available for online viewing at the Water Docket in the EPA Docket Center (EPA/DC), EPA West, Room 3334, 1301 Constitution Avenue, NW., Washington, DC. The EPA Docket Center Public Reading Room is open from 8 a.m. to 4:30 p.m., Monday through Friday, excluding legal holidays. The telephone number for the Reading Room is (202) 566–1744, and the telephone number for the Water Docket Docket is (202) 566–2426.

Use *http://www.regulations.gov* to obtain a copy of the draft collection of information, submit or view public comments, access the index listing of the contents of the public docket, and to access those documents in the public docket that are available electronically. Once in the system, select ''search,'' then key in the docket ID number identified above.

What Information is EPA Particularly Interested in?

Pursuant to section 3506(c)(2)(A) of the PRA, EPA specifically solicits comments and information to enable it to:

(i) Evaluate whether the proposed collection of information is necessary for the proper performance of the functions of the Agency, including whether the information will have practical utility;

(ii) Evaluate the accuracy of the Agency's estimate of the burden of the proposed collection of information, including the validity of the methodology and assumptions used;

(iii) Enhance the quality, utility, and clarity of the information to be collected; and

(iv) Minimize the burden of the collection of information on those who are to respond, including through the use of appropriate automated electronic, mechanical, or other technological collection techniques or other forms of information technology, e.g., permitting electronic submission of responses. In particular, EPA is requesting comments from very small businesses (those that employ less than 25) on examples of specific additional efforts that EPA could make to reduce the paperwork burden for very small businesses affected by this collection.

What Should I Consider when I Prepare My Comments for EPA?

You may find the following suggestions helpful for preparing your comments:

1. Explain your views as clearly as possible and provide specific examples.
2. Describe any assumptions that you used.
3. Provide copies of any technical information and/or data you used that support your views.
4. If you estimate potential burden or costs, explain how you arrived at the estimate that you provide.
5. Offer alternative ways to improve the collection activity.
6. Make sure to submit your comments by the deadline identified under **DATES.**

7. To ensure proper receipt by EPA, be sure to identify the docket ID number assigned to this action in the subject line on the first page of your response. You may also provide the name, date, and **Federal Register** citation.

What Information Collection Activity or ICR Does This Apply to?

Affected Entities: Entities potentially affected by this action are State, local, and tribal governments.

Title: Establishing No-Discharge Zones Under Clean Water Act section 312.

ICR Numbers: EPA ICR No. 1791.05, OMB Control No. 2040–0187.

ICR Status: This ICR is scheduled to expire on June 30, 2008.

Abstract: (A) *Sewage No-discharge Zones:* The need for EPA to obtain information for the establishment of no-discharge zones (NDZs) for vessel sewage in State waters stems from CWA sections 312(f)(3), (f)(4)(A), and (f)(4)(B), and subsequent regulations at 40 CFR 140.4(a)–(c). No-discharge zones are established to provide State and local governments with additional protection of waters from treated or untreated vessel sewage. There are three ways in which NDZs for vessel sewage can be established. This ICR discusses the information requirements associated with the establishment of NDZs for vessel sewage. The responses to this collection of information are required to obtain the benefit of a sewage NDZ (see 33 U.S.C. 1322). The information collection activities discussed in this ICR do not require the submission of any confidential information.

(B) *UNDS No-discharge Zones:* Under section 312(n) of the Clean Water Act (''Uniform National Discharge Standards for Vessels of the Armed Forces'' or ''UNDS'') no-discharge zones (''NDZs'') for discharges from Armed Forces vessels may be established by either State prohibition or EPA prohibition following the procedures in 40 CFR Part 1700. UNDS also provides that the Governor of any State may petition EPA and the Secretary of Defense to review any determination or standard promulgated under the UNDS program if there is significant new information that could reasonably result in a change to the determination or standard. This ICR discusses the information that will be required from a State if it decides to establish a NDZ by State prohibition or apply for a NDZ by EPA prohibition, and the information that will be required from a State if it decides to submit a petition for review. The responses to this collection of information are required to obtain the benefit of an UNDS NDZ or a review of an UNDS determination or standard (see 33 U.S.C. 1322(n)). The information collection activities discussed in this ICR do not require the submission of any confidential information.

Burden Statement: The annual public reporting and recordkeeping burden for this collection of information is estimated to be 127 hours per response. The estimates include time for gathering information, and preparing and submitting requests. Burden means the total time, effort, or financial resources expended by persons to generate, maintain, retain, or disclose or provide information to or for a Federal agency. This includes the time needed to review instructions; develop, acquire, install, and utilize technology and systems for the purposes of collecting, validating, and verifying information, processing and maintaining information, and disclosing and providing information; adjust the existing ways to comply with any previously applicable instructions and requirements; train personnel to be able to respond to a collection of information; search data sources; complete and review the collection of information; and transmit or otherwise disclose the information.

The ICR provides a detailed explanation of the Agency's estimate, which is captured in the following charts.

TABLE 1.—SEWAGE NDZ TOTAL ESTIMATED RESPONDENT (STATE AGENCY) BURDEN AND COST SUMMARY

	Number of respondents	Number of activities per year	Total number of hours per year	Total labor cost per year ($)	Total annual capital cost ($)	Total annual O&M costs ($)
Sewage NDZ by State Prohibition [40 CFR 140.4(a)]	8	8	1064	47,058	0.00	1,200
Sewage NDZ by EPA Prohibition [40 CFR 140.4(b)]	1	.33	43	1,888	0.00	50
Drinking water NDZs [40 CFR 140.4(c)]	1	1	143	6,369	0.00	150
Total	10	9.33	1250	55,315	0.00	1,400

TABLE 2.—UNDS TOTAL ESTIMATED RESPONDENT (STATE AGENCY) BURDEN AND COST SUMMARY

	Number of respondents	Number of activities	Total number of hours	Total labor cost per ($)	Total annual capital ($)	Total annual O&M costs ($)
No-discharge Zone by State Prohibition 40 CFR 1700.9; Table 4]	4	4	717	32,408	0	600
No-discharge Zone by EPA Prohibition [40 CFR 1700.10; Table 5]	1	1	194.25	8,821	0	150
Petition for Review [40 CFR 1700.12; Table 6]	1	1	46.25	1,976	0	150
Total	6	6	957.5	43,206	0	900

TABLE 3. TOTAL CWA SECTION 312 ESTIMATED RESPONDENT (STATE AGENCY) BURDEN AND COST SUMMARY

	Number of respondents	Number of activities per year	Total number of hours per	Total labor cost per year ($)	Total annual capital ($)	Total annual O&M costs ($)
Total	16	15.33	2207.5	98,520	0.00	2,300

Are There Changes in the Estimates From the Last Approval?

Estimates have been updated with current state and federal labor costs.

What Is the Next Step in the Process for This ICR?

EPA will consider the comments received and amend the ICR as appropriate. The final ICR package will then be submitted to OMB for review and approval pursuant to 5 CFR 1320.12. At that time, EPA will issue another **Federal Register** notice pursuant to 5 CFR 1320.5(a)(1)(iv) to announce the submission of the ICR to OMB and the opportunity to submit additional comments to OMB. If you have any questions about this ICR or the approval process, please contact the technical person listed under **FOR FURTHER INFORMATION CONTACT**.

Dated: March 19, 2008.

Craig E. Hooks,

Director, Office of Wetlands, Oceans and Watersheds.

[FR Doc. E8–6002 Filed 3–24–08; 8:45 am]

BILLING CODE 6560–50–P

EQUAL EMPLOYMENT OPPORTUNITY COMMISSION

[OMB Number: 3046–0017]

Agency Information Collection Activities: Notice of Submission for OMB Review; Request for Comments

AGENCY: Equal Employment Opportunity Commission.

ACTION: Notice of Information Collection—Uniform Guidelines on Employee Selection Procedures.

SUMMARY: In accordance with the Paperwork Reduction Act of 1995, the Equal Employment Opportunity Commission (EEOC) gives notice of its intent to submit to the Office of Management and Budget (OMB) a request to approve a renewal of an information collection as described below.

DATES: Written comments on this notice must be submitted on or before May 27, 2008.

ADDRESSES: You may submit comments by any of the following methods:

- *By mail to:* Stephen Llewellyn, Executive Officer, Executive Secretariat, Equal Employment Opportunity Commission, 1801 L Street, NW., Washington, DC 20507.
- *By facsimile (''FAX'') machine to:* (202) 663–4114. (There is no toll free FAX number). Only comments of six or fewer pages will be accepted via FAX transmittal, in order to assure access to the equipment. Receipt of FAX transmittals will not be acknowledged, except that the sender may request confirmation of receipt by calling the Executive Secretariat staff at (202) 663–4070 (voice) or (202) 663–4074 (TTY). (These are not toll free numbers).
- *By the Federal eRulemaking Portal: http://www.regulations.gov.* After accessing this Web site, follow its instructions for submitting comments.

Comments need to be submitted in only one of the above-listed formats, not all three. All comments received will be posted without change to *http://www.regulations.gov,* including any personal information you provide. Copies of the received comments also will be available for inspection in the EEOC Library, FOIA Reading Room, by advance appointment only, from 9 a.m. to 5 p.m., Monday through Friday except legal holidays, from May 27, 2008 until the Commission publishes the 30-day notice for this item. Persons who schedule an appointment in the EEOC Library, FOIA Reading Room, and need assistance to view the comments will be provided with appropriate aids upon request, such as readers or print magnifiers. To schedule an appointment to inspect the comments at the EEOC Library, FOIA Reading Room, contact the EEOC Library by calling (202) 663–4630 (voice) or (202) 663–4641 (TTY). (These are not toll free numbers).

FOR FURTHER INFORMATION CONTACT: Reed L. Russell, Legal Counsel, 1801 L Street, NW., Washington, DC 20507; (202) 663–4638 (voice) or (202) 663–7026 (TTY).

SUPPLEMENTARY INFORMATION:

Introduction

The Equal Employment Opportunity Commission (EEOC or Commission) gives notice of its intent to submit the Uniform Guidelines on Employee Selection Procedures (UGESP or Uniform Guidelines),[1] without change, to the Office of Management and Budget (OMB) for a three-year approval under the Paperwork Reduction Act of 1995 (PRA). A prior PRA document relating to the Uniform Guidelines entitled ''Agency Information Collection Activities: Adoption of Additional Questions and Answers To Clarify and Provide a Common Interpretation of the Uniform Guidelines on Employee Selection Procedures as They Relate to the Internet and Related Technologies,'' was published in the March 4, 2004 **Federal Register**. 69 FR 10152. (''March 4, 2004 PRA document'').

Based on the comments received to the March 4, 2004 PRA document, the EEOC does not intend to finalize the five additional Questions and Answers that include clarification of the definition of ''applicant.'' However, employers still must ensure that they are complying with the requirements of UGESP.

The preamble of the March 4, 2004 PRA document stated that ''[e]ach agency may provide further information, as appropriate, through the issuance of additional guidance or regulations that will allow each agency to carry out its specific enforcement responsibilities.'' 69 FR 10153. The Department of Labor's Office of Federal Contract Compliance Programs then amended its regulations governing applicant recordkeeping requirements ''in light of [its] unique use of applicant data for compliance monitoring and other enforcement purposes.'' 70 FR 58946.

In light of the EEOC's unique enforcement responsibilities and priorities monitoring employment practices and detecting employment discrimination, it will determine, after further study, how and if it should issue further guidance or regulations clarifying Title VII of the 1964 Civil Rights Act and the Americans with Disabilities Act regarding when employers and job seekers use the Internet and related technologies.

Request for Comments

The EEOC invites comments enabling the agency to:

(1) Evaluate whether the collection of information is necessary for the proper performance of the functions of the agency, including whether the information will have practical utility;

(2) Evaluate the accuracy of the agency's estimate of the burden of the collection of information, including the validity of the methodology and assumptions used;

(3) Enhance the quality, utility, and clarity of the information to be collected; and

(4) Minimize the burden of the collection of information on those who are to respond, including through the use of appropriate automated, electronic, mechanical, or other technological collection techniques or other forms of information technology, e.g., permitting electronic submission of responses.

Overview of Collection

Collection Title: Recordkeeping Requirements of the Uniform Guidelines on Employee Selection Procedures, 29

[1] 29 CFR part 1607, 41 CFR part 60–3, 28 CFR part 50, 5 CFR part 300.

CFR part 1607, 41 CFR part 60–3, 28 CFR part 50, 5 CFR part 300.

OMB Number: 3046–0017.

Type of Respondent: Businesses or other institutions; federal government; state or local governments and farms.

North American Industry Classification System (NAICS) Code: Multiple.

Standard Industrial Classification Code (SIC): Multiple.

Description of Affected Public: Any employer, government contractor, labor organization, or employment agency covered by the federal equal employment opportunity laws.

Respondents: 846,156.

Responses: 846,156.

Recordkeeping Hours: 14,822,194.89.

Number of Forms: None.

Form Number: None.

Frequency of Report: None.

Abstract: The records addressed by UGESP are used by respondents to assure that they are complying with Title VII and Executive Order 11246; by the federal agencies that enforce Title VII and/or Executive Order 11246 to investigate, conciliate and litigate charges of employment discrimination; and by complainants to establish violations of federal equal employment opportunity laws.

Burden Statement: There are no reporting requirements associated with UGESP. The burden being estimated is the cost of collecting and storing a job applicant's gender, race and ethnicity data. The only paperwork burden derives from this recordkeeping.

Only employers covered under Title VII and Executive Order 11246 are subject to UGESP. For the purpose of burden calculation, employers with 15 or more employees are counted. The number of such employers is estimated at 846,156, which combines estimates from private employment, the public sector, colleges and universities, and referral unions.

This burden assessment is based on an estimate of the total number of job applications submitted to all Title VII-covered employers in one year, including paper-based and electronic applications. The total number of job applications submitted every year to these covered employers is estimated to be 1,778,663,387, which is based on a National Organizations Survey average of 35.225 applications for every hire and a Bureau of Labor Statistics data estimate of 50,490,000 annual hires. It also includes 153,137 applicants for union membership reported on the EEO–3 form for 2006.

The employer burden associated with collecting and storing applicant demographic data is based on the following assumptions: applicants would need to be asked to provide three pieces of information—sex, race/ethnicity, and an identification number (a total of approximately 13 keystrokes); the employer would need to transfer information received to a data base either manually or electronically; and the employer would need to store the 13 characters of information for each applicant. Recordkeeping cost and burden are assumed to be the cost of entering 13 keystrokes.

Assuming that the required recordkeeping takes 30 seconds per record, and assuming a total of 1,778,663,387 paper and electronic applications per year, the resulting UGESP burden hours would be 14,822,195. Based on a wage rate of $12.29 per hour for the individuals entering the data, the collection and storage of applicant demographic data would come to $182,164,777 per year for Title VII-covered employers.

Dated: March 17, 2008.

Naomi C. Earp,

Chair, Equal Employment Opportunity Commission.

[FR Doc. E8–5903 Filed 3–24–08; 8:45 am]

BILLING CODE 6570–01–P

OFFICE OF SCIENCE AND TECHNOLOGY POLICY

Meeting of the President's Council of Advisors on Science and Technology

ACTION: Notice of meeting.

SUMMARY: This notice sets forth the schedule and summary agenda for a meeting of the President's Council of Advisors on Science and Technology (PCAST), and describes the functions of the Council. Notice of this meeting is required under the Federal Advisory Committee Act (FACA).

Dates and Place: April 8, 2008, Washington, DC. The meeting will be held in Room 100 at the Keck Center of the National Academies at 500 5th St., NW., Washington, DC.

Type of Meeting: Open. Further details on the meeting agenda will be posted on the PCAST Web site at: *http://ostp.gov/cs/pcast/meetings_agendas*.

Proposed Schedule and Agenda: The President's Council of Advisors on Science and Technology (PCAST) is scheduled to meet in open session on Tuesday, April 8, 2008, at approximately 9 a.m. The chair of the PCAST subcommittee on personalized medicine is tentatively scheduled to lead a discussion on the findings of the PCAST study on personalized medicine. The PCAST also is tentatively scheduled to convene two panels. The first panel will address policy issues associated with realizing the benefits of personalized medicine. The second panel will address approaches and barriers to research partnerships among universities and the private sector. Additionally, PCAST is tentatively scheduled to receive a briefing on the 2008 Science and Engineering Indicators developed by the National Science Board. This session will end at approximately 4 p.m. Additional information and the final agenda will be posted at the PCAST Web site at: *http://ostp.gov/cs/pcast/meetings_agendas*.

Public Comments: There will be time allocated for the public to speak on the above agenda items. This public comment time is designed for substantive commentary on PCAST's work topics, not for business marketing purposes. Please submit a request for the opportunity to make a public comment five (5) days in advance of the meeting. The time for public comments will be limited to no more than 5 minutes per person. Written comments are also welcome at any time following the meeting. Please notify Dr. Scott Steele, PCAST Executive Director, at (202) 456–6549, or fax your request/comments to (202) 456–6040.

FOR FURTHER INFORMATION CONTACT: Information regarding agenda, time, and location is available at the PCAST Web site at: *http://ostp.gov/cs/pcast/meetings_agendas*. Questions about the meeting should be directed to PCAST Executive Director Dr. Scott Steele at (202) 456–6549 prior to 3 p.m. on Friday, April 4, 2008. Please note that public seating for this meeting is limited and is available on a first-come, first-served basis.

SUPPLEMENTARY INFORMATION: The President's Council of Advisors on Science and Technology was established by Executive Order 13226, on September 30, 2001. The purpose of PCAST is to advise the President on matters of science and technology policy, and to assist the President's National Science and Technology Council in securing private sector participation in its activities. The Council members are distinguished individuals appointed by the President from non-Federal sectors. The PCAST is co-chaired by Dr. John H. Marburger, III, the Director of the Office of Science and Technology Policy, and by E. Floyd

Kvamme, a Partner at Kleiner Perkins Caufield & Byers.

M. David Hodge,

Operations Manager, Office of Science and Technology Policy.

[FR Doc. E8–5950 Filed 3–24–08; 8:45 am]

BILLING CODE 3170–W8–P

FEDERAL RESERVE SYSTEM

Change in Bank Control Notices; Acquisition of Shares of Bank or Bank Holding Companies

The notificants listed below have applied under the Change in Bank Control Act (12 U.S.C. 1817(j)) and § 225.41 of the Board's Regulation Y (12 CFR 225.41) to acquire a bank or bank holding company. The factors that are considered in acting on the notices are set forth in paragraph 7 of the Act (12 U.S.C. 1817(j)(7)).

The notices are available for immediate inspection at the Federal Reserve Bank indicated. The notices also will be available for inspection at the office of the Board of Governors. Interested persons may express their views in writing to the Reserve Bank indicated for that notice or to the offices of the Board of Governors. Comments must be received not later than April 9, 2008.

A. Federal Reserve Bank of Minneapolis (Jacqueline G. King, Community Affairs Officer) 90 Hennepin Avenue, Minneapolis, Minnesota 55480-0291:

1. Louis B. Olsen, Eagan, Minnesota; to acquire voting shares of Northern Star Financial, Inc., Mankato, Minnesota, and thereby indirectly gain control of Northern Star Bank, Mankato, Minnesota.

Board of Governors of the Federal Reserve System, March 20, 2008.

Robert deV. Frierson,

Deputy Secretary of the Board.

[FR Doc. E8–5972 Filed 3–24–08; 8:45 am]

BILLING CODE 6210–01–S

FEDERAL RESERVE SYSTEM

Formations of, Acquisitions by, and Mergers of Bank Holding Companies

The companies listed in this notice have applied to the Board for approval, pursuant to the Bank Holding Company Act of 1956 (12 U.S.C. 1841 *et seq.*) (BHC Act), Regulation Y (12 CFR Part 225), and all other applicable statutes and regulations to become a bank holding company and/or to acquire the assets or the ownership of, control of, or the power to vote shares of a bank or bank holding company and all of the banks and nonbanking companies owned by the bank holding company, including the companies listed below.

The applications listed below, as well as other related filings required by the Board, are available for immediate inspection at the Federal Reserve Bank indicated. The application also will be available for inspection at the offices of the Board of Governors. Interested persons may express their views in writing on the standards enumerated in the BHC Act (12 U.S.C. 1842(c)). If the proposal also involves the acquisition of a nonbanking company, the review also includes whether the acquisition of the nonbanking company complies with the standards in section 4 of the BHC Act (12 U.S.C. 1843). Unless otherwise noted, nonbanking activities will be conducted throughout the United States. Additional information on all bank holding companies may be obtained from the National Information Center website at *www.ffiec.gov/nic/*.

Unless otherwise noted, comments regarding each of these applications must be received at the Reserve Bank indicated or the offices of the Board of Governors not later than April 18, 2008.

A. Federal Reserve Bank of Richmond (A. Linwood Gill, III, Vice President) 701 East Byrd Street, Richmond, Virginia 23261-4528:

1. Alliance Financial Corporation, Gastonia, North Carolina; to become a bank holding company by acquiring 100 percent of Alliance Bank and Trust Company, Gastonia, North Carolina.

B. Federal Reserve Bank of Atlanta (David Tatum, Vice President) 1000 Peachtree Street, N.E., Atlanta, Georgia 30309:

1. Resurgens Bancorp, Inc., Atlanta, Georgia; to become a bank holding company by acquiring 100 percent of the outstanding voting shares of Resurgens bank, Atlanta, Georgia (in organization).

C. Federal Reserve Bank of Dallas (W. Arthur Tribble, Vice President) 2200 North Pearl Street, Dallas, Texas 75201-2272:

1. Central Bancorp, Inc., Garland, Texas; to acquire 100 percent of the voting shares of Jones County Bank, Haddock, Georgia.

Board of Governors of the Federal Reserve System, March 20, 2008.

Robert deV. Frierson,

Deputy Secretary of the Board.

[FR Doc. E8–5971 Filed 3–24–08; 8:45 am]

BILLING CODE 6210–01–S

FEDERAL RESERVE SYSTEM

Sunshine Act Meeting

AGENCY HOLDING THE MEETING: Board of Governors of the Federal Reserve System.

TIME AND DATE: 11:30 a.m., Monday, March 31, 2008.

PLACE: Marriner S. Eccles Federal Reserve Board Building, 20th and C Streets, N.W., Washington, D.C. 20551.

STATUS: Closed.

MATTERS TO BE CONSIDERED:

1. Personnel actions (appointments, promotions, assignments, reassignments, and salary actions) involving individual Federal Reserve System employees.

2. Any items carried forward from a previously announced meeting.

FOR FURTHER INFORMATION CONTACT: Michelle Smith, Director, or Dave Skidmore, Assistant to the Board, Office of Board Members at 202–452–2955.

SUPPLEMENTARY INFORMATION: You may call 202–452–3206 beginning at approximately 5 p.m. two business days before the meeting for a recorded announcement of bank and bank holding company applications scheduled for the meeting; or you may contact the Board's Web site at *http://www.federalreserve.gov* for an electronic announcement that not only lists applications, but also indicates procedural and other information about the meeting.

Board of Governors of the Federal Reserve System, March 21, 2008.

Robert deV. Frierson,

Deputy Secretary of the Board.

[FR Doc. 08–1074 Filed 3–21–08; 1:53 pm]

BILLING CODE 6210–01–S

FEDERAL RESERVE SYSTEM

Notice of Proposals to Engage in Permissible Nonbanking Activities or to Acquire Companies that are Engaged in Permissible Nonbanking Activities

The companies listed in this notice have given notice under section 4 of the Bank Holding Company Act (12 U.S.C. 1843) (BHC Act) and Regulation Y (12 CFR Part 225) to engage *de novo*, or to acquire or control voting securities or assets of a company, including the companies listed below, that engages either directly or through a subsidiary or other company, in a nonbanking activity that is listed in § 225.28 of Regulation Y (12 CFR 225.28) or that the Board has determined by Order to be closely related to banking and permissible for

bank holding companies. Unless otherwise noted, these activities will be conducted throughout the United States.

Each notice is available for inspection at the Federal Reserve Bank indicated. The notice also will be available for inspection at the offices of the Board of Governors. Interested persons may express their views in writing on the question whether the proposal complies with the standards of section 4 of the BHC Act. Additional information on all bank holding companies may be obtained from the National Information Center website at *www.ffiec.gov/nic/*.

Unless otherwise noted, comments regarding the applications must be received at the Reserve Bank indicated or the offices of the Board of Governors not later than April 9, 2008.

A. Federal Reserve Bank of Chicago (Burl Thornton, Assistant Vice President) 230 South LaSalle Street, Chicago, Illinois 60690-1414:

1. First Fontanelle Employee Stock Ownership Plan and Trust, Fontanelle, Iowa; to indirectly engage in insurance agency activities through Corn Belt Insurance Agency, Massena, Iowa, and thereby indirectly acquire First Fontanelle Bancorporation, Fontanelle, Iowa pursuant to section 225.28(b)(11)(iii)(A) of Regulation Y.

Board of Governors of the Federal Reserve System, March 20, 2008.

Robert deV. Frierson,

Deputy Secretary of the Board.

[FR Doc.E8–5970 Filed 3–24–08; 8:45 am]

BILLING CODE 6210–01–S

DEPARTMENT OF HEALTH AND HUMAN SERVICES

National Toxicology Program (NTP); NTP Interagency Center for the Evaluation of Alternative Toxicological Methods (NICEATM); Availability of the Interagency Coordinating Committee on the Validation of Alternative Methods (ICCVAM) Test Method Evaluation Report: In Vitro Cytotoxicity Test Methods for Estimating Starting Doses for Acute Oral Systemic Toxicity Tests and the Final Background Review Document for In Vitro Cytotoxicity Test Methods for Estimating Acute Oral Systemic Toxicity; Notice of Transmittal of ICCVAM Test Method Recommendations to Federal Agencies

AGENCY: National Institute of Environmental Health Sciences (NIEHS), National Institutes of Health (NIH).

ACTION: Availability of ICCVAM Test Method Evaluation Report and Final Background Review Document.

SUMMARY: NICEATM announces availability of the *ICCVAM Test Method Evaluation Report: In Vitro Cytotoxicity Test Methods for Estimating Starting Doses for Acute Oral Systemic Toxicity Tests* (NIH Publication 07–4519). The report describes two *in vitro* basal cytotoxicity neutral red uptake (NRU) test methods that can be used for estimating starting doses for acute oral toxicity tests. The report includes ICCVAM's (a) final test method recommendations on the use of these two test methods, (b) recommended test method protocols for future use, (c) recommendations for future studies to further characterize the usefulness and limitations of *in vitro* methods for assessing acute systemic toxicity, and (d) recommended performance standards for tests with similar scientific principles and that measure or predict acute oral systemic toxicity. The report recommends the use of these methods in a weight-of-evidence approach to determine starting doses for acute oral systemic toxicity tests with rodents. The report also recommends that these *in vitro* test methods be considered before using animals for acute oral systemic toxicity testing and used when determined appropriate.

NICEATM also announces the availability of the final *Background Review Document: In Vitro Cytotoxicity Test Methods for Estimating Acute Oral Systemic Toxicity* (BRD) (NIH Publication 07–4518). The BRD provides data and analyses from a collaborative international validation study organized by NICEATM and the European Centre for the Validation of Alternative Methods (ECVAM) to evaluate the usefulness and limitations of two *in vitro* basal cytotoxicity NRU test methods using either BALB/c 3T3 mouse fibroblasts (3T3) or primary human epidermal keratinocytes (NHK) for estimating acute oral rodent toxicity.

Electronic copies of the ICCVAM Test Method Evaluation Report and the BRD are available from the ICCVAM/NICEATM Web site at *http://iccvam.niehs.nih.gov* or by contacting NICEATM (see **FOR FURTHER INFORMATION CONTACT**). The ICCVAM Test Method Evaluation Report and the final BRD have been forwarded to U.S. Federal agencies for regulatory and other acceptance considerations where applicable. Responses will be posted on the ICCVAM/NICEATM Web site as they are received.

FOR FURTHER INFORMATION CONTACT: Dr. William S. Stokes, Director, NICEATM, NIEHS, P.O. Box 12233, MD EC–17, Research Triangle Park, NC 27709, (phone) 919–541–2384, (fax) 919–541–0947, (e-mail) *niceatm@niehs.nih.gov*. Courier address: NICEATM, NIEHS, 79 T.W. Alexander Drive, Building 4401, Room 3128, Research Triangle Park, NC 27709.

SUPPLEMENTARY INFORMATION:

Background

In 2002, NICEATM and ECVAM initiated a collaborative, international, multi-laboratory validation study to independently evaluate the usefulness of the 3T3 and NHK NRU basal cytotoxicity test methods for estimating acute oral rodent toxicity and for estimating starting doses for *in vivo* rodent acute oral toxicity tests. The 3T3 and NHK NRU test methods were evaluated with 72 reference substances. Once the study was completed in January 2005, NICEATM prepared a draft BRD that contained comprehensive summaries of the data generated in the validation study, analyses of the relevance and reliability of the two test methods, and simulation analyses of the refinement (i.e., to lessen or avoid pain and distress) and reduction in animal use that might occur if these tests were used as adjuncts to two acute oral toxicity test methods (i.e., the Up-and-Down Procedure and the Acute Toxic Class method). The draft BRD was released for public comment on March 21, 2006 (**Federal Register**, Vol. 71, No. 54, pp. 14229–14231).

On May 23, 2006, NICEATM, on behalf of ICCVAM, convened an independent, scientific peer review panel meeting to review the draft BRD and evaluate the validation status of the 3T3 and NHK NRU test methods for determining starting doses for *in vivo* acute oral systemic toxicity tests. The peer review panel's report was released in July 2006 (**Federal Register**, Vol. 71, No. 132, pp. 39122–39123). At a public teleconference meeting on August 3, 2006 (**Federal Register**, Vol. 71, No. 132, pp. 39121–39122), the Scientific Advisory Committee on Alternative Toxicological Methods (SACATM) reviewed and endorsed the conclusions of the peer review panel (minutes from the teleconference are available at *http://ntp.niehs.nih.gov/files/SACATMAug06MinutesVF081506.pdf*).

ICCVAM considered the peer panel report, public comments, SACATM comments, and the draft BRD in finalizing its recommendations on the use of these two *in vitro* basal cytotoxicity test methods for estimating starting doses for acute oral systemic toxicity tests. The ICCVAM Test Method Evaluation Report includes the ICCVAM

recommendations on the use of the two *in vitro* NRU test methods, as well as recommended test method protocols, recommendations for future studies to further characterize the usefulness and limitations of *in vitro* methods for assessing acute systemic toxicity, recommended performance standards for tests with similar scientific principles and that measure or predict acute oral systemic toxicity, the peer panel report and **Federal Register** notices. The final BRD, which provides the supporting documentation for this report, is available as a separate document. The ICCVAM Test Method Evaluation Report and the supporting final BRD were forwarded to U.S. Federal agencies for their consideration for regulatory acceptance as required by the ICCVAM Authorization Act of 2000 (42 U.S.C. 285*l*–3). Agencies' responses to the test method recommendations will be posted on the ICCVAM/NICEATM Web site as they are received.

Background Information on ICCVAM, NICEATM, and SACATM

ICCVAM is an interagency committee composed of representatives from 15 Federal regulatory and research agencies that use, generate, or disseminate toxicological information. ICCVAM conducts technical evaluations of new, revised, and alternative methods with regulatory applicability and promotes the scientific validation and regulatory acceptance of toxicological test methods that more accurately assess the safety and hazards of chemicals and products and that refine, reduce, and replace animal use. The ICCVAM Authorization Act of 2000 established ICCVAM as a permanent interagency committee of the NIEHS under NICEATM. NICEATM administers ICCVAM and provides scientific and operational support for ICCVAM-related activities. NICEATM and ICCVAM work collaboratively to evaluate new and improved test methods applicable to the needs of U.S. Federal agencies. Additional information about ICCVAM and NICEATM can be found on their Web site (*http://iccvam.niehs.nih.gov*).

SACATM was established January 9, 2002, and is composed of scientists from the public and private sectors (**Federal Register**, Vol. 67, No. 49, page 11358). SACATM provides advice to the Director of the NIEHS, to ICCVAM, and to NICEATM regarding the statutorily mandated duties of ICCVAM and activities of NICEATM. Additional information about SACATM, including the charter, roster, and records of past meetings, can be found at *http://ntp.niehs.nih.gov/* see ''Advisory Board & Committees'' (or directly at *http://ntp.niehs.nih.gov/go/167*).

Dated: March 14, 2008.

Samuel H. Wilson,

Acting Director, National Institute of Environmental Health Sciences and National Toxicology Program.

[FR Doc. E8–5936 Filed 3–24–08; 8:45 am]

BILLING CODE 4140–01–P

DEPARTMENT OF HEALTH AND HUMAN SERVICES

Office of the National Coordinator for Health Information Technology; American Health Information Community Confidentiality, Privacy, & Security Workgroup Meeting

ACTION: Announcement of meeting.

SUMMARY: This notice announces the 18th meeting of the American Health Information Community Confidentiality, Privacy, & Security Workgroup in accordance with the Federal Advisory Committee Act (Pub. L. No. 92–463, 5 U.S.C., App.)

DATES: April 17, 2008, from 1 p.m. to 5 p.m. (Eastern Time).

ADDRESSES: Mary C. Switzer Building (330 C Street, SW., Washington, DC 20201), Conference Room 4090 (please bring photo ID for entry to a Federal building).

FOR FURTHER INFORMATION CONTACT: *http://www.hhs.gov/healthit/ahic/confidentiality/.*

SUPPLEMENTARY INFORMATION: The Workgroup Members will continue discussing and evaluating the confidentiality, privacy, and security protections and requirements for participants in electronic health information exchange environments.

The meeting will be available via Web cast. For additional information, go to: *http://www.hhs.gov/healthit/ahic/cps_instruct.html.*

Dated: March 13, 2008.

Judith Sparrow,

Director, American Health Information Community, Office of Programs and Coordination, Office of the National Coordinator for Health Information Technology.

[FR Doc. E8–5853 Filed 3–24–08; 8:45 am]

BILLING CODE 4150–45–M

DEPARTMENT OF HEALTH AND HUMAN SERVICES

Administration for Children and Families

Proposed Information Collection Activity; Comment Request

Proposed Projects

Title: Grants to States for Access and Visitation: State Child Access Program Survey.

OMB No.: 0970–0204.

Description: On an annual basis, States must provide OCSE with data on programs that the Grants to States for Access and Visitation Program has funded. These program reporting requirements include, but are not limited to, the collection of data on the number of parents served, types of services delivered, program outcomes, client socio-economic data, referral sources, and other relevant data. OCSE is proposing revisions to the current survey.

ANNUAL BURDEN ESTIMATES

Instrument	No. of respondents	No. of responses per respondent	Average burden hours per response	Total burden hours
State Child Access Program Survey	314	1	15	4,710

Estimated Total Annual Burden Hours: 4,710.

In compliance with the requirements of Section 506(c)(2)(A) of the Paperwork Reduction Act of 1995, the Administration for Children and Families is soliciting public comment on the specific aspects of the information collection described above. Copies of the proposed collection of information can be obtained and comments may be forwarded by writing to the Administration for Children and Families, Office of Administration, Office of Information Services, 370 L'Enfant Promenade, SW., Washington, DC 20447, Attn: Office of Administration, Office of Information

Services, 370 L'Enfant Promenade, SW., Washington, DC 20447, Attn: ACE Reports Clearance Officer. E-mail address: *infocollection@acf.hhs.gov.* All requests should be identified by the title of the information collection.

The Department specifically requests comments on: (a) Whether the proposed collection of information is necessary for the proper performance of the functions of the agency, including whether the information shall have practical utility; (b) the accuracy of the agency's estimate of the burden of the proposed collection of information; (c) the quality, utility, and clarity of the information to be collected; and (d) ways to minimize the burden of the collection of information on respondents, including through the use of automated collection techniques or other forms of information technology.

Consideration will be given to comments and suggestions submitted within 60 days of this publication.

Dated: March 19, 2008.

Janean Chambers,

Reports Clearance Officer.

[FR Doc. E8–5951 Filed 3–24–08; 8:45 am]

BILLING CODE 4184–01–M

DEPARTMENT OF HEALTH AND HUMAN SERVICES

Administration for Children and Families

Proposed Information Collection Activity; Comment Request

Proposed Projects

Title: Temporary Assistance for Needy Families (TANF) State Plan; Guidance.

OMB No.: 0970–0145.

Description: The State plan is a mandatory statement submitted to the Secretary of the Department of Health and Human Services by the State. It consists of an outline of how the State's TANF program will be administered and operated and certain required certifications by the State's Chief Executive Officer. Its submittal triggers the State's family assistance grant funding and it is used to provide the public with information about the program. If a State makes changes in its program, it must submit a State plan amendment.

Respondents: The 50 States, the District of Columbia, Guam, Puerto Rico and the Virgin Islands.

ANNUAL BURDEN ESTIMATES

Instrument	No. of respondents	No. of responses per respondent	Average burden hours per response	Total burden hours
Temporary Assistance for Needy Families (TANF) State Plan Guidance	54	0.5	33	891

Estimated Total Annual Burden Hours: 891.

In compliance with the requirements of Section 506(c)(2)(A) of the Paperwork Reduction Act of 1995, the Administration for Children and Families is soliciting public comment on the specific aspects of the information collection described above. Copies of the proposed collection of information can be obtained and comments may be forwarded by writing to the Administration for Children and Families, Office of Administration, Office of Information Services, 370 L'Enfant Promenade, SW., Washington, DC 20447, Attn: ACF Reports Clearance Officer. E-mail address: *infocollection@acf.hhs.gov.* All requests should be identified by the title of the information collection.

The Department specifically requests comments on: (a) Whether the proposed collection of information is necessary for the proper performance of the functions of the agency, including whether the information shall have practical utility; (b) the accuracy of the agency's estimate of the burden of the proposed collection of information; (c) the quality, utility, and clarity of the information to be collected; and (d) ways to minimize the burden of the collection of information on respondents, including through the use of automated collection techniques or other forms of information technology.

Consideration will be given to comments and suggestions submitted within 60 days of this publication.

Dated: March 19, 2008.

Janean Chambers,

Reports Clearance Officer.

[FR Doc. E8–5952 Filed 3–24–08; 8:45 am]

BILLING CODE 4184–01–M

DEPARTMENT OF HEALTH AND HUMAN SERVICES

Food and Drug Administration

[Docket No. FDA–2008–D–0149] (formerly Docket No. 2007D–0031)

Global Harmonization Task Force, Study Group 4; Final Document; Availability

AGENCY: Food and Drug Administration, HHS.

ACTION: Notice.

SUMMARY: The Food and Drug Administration (FDA) is announcing the availability of a final document that has been prepared by Study Group 4 of the Global Harmonization Task Force (GHTF). This document represents a harmonized proposal and recommendation from Study Group 4 of the GHTF that may be used by governments developing and updating their regulatory requirements for medical devices. This document is intended to provide information only and does not describe current regulatory requirements; elements of this document may not be consistent with current U.S. regulatory requirements.

DATES: Submit written or electronic comments on this guidance at any time. General comments on agency guidance documents are welcome at any time.

ADDRESSES: Submit written requests for single copies of the guidance document to the Division of Small Manufacturers, International, and Consumer Assistance (HFZ–220), Center for Devices and Radiological Health, Food and Drug Administration, 1350 Piccard Dr., Rockville, MD 20850. Send one self-addressed adhesive label to assist that office in processing your request, or fax your request to 240–276–3151. See the **SUPPLEMENTARY INFORMATION** section for information on electronic access to the guidance. Submit written comments concerning this document to the Division of Dockets Management (HFA–305), Food and Drug Administration, 5630 Fishers Lane, rm. 1061, Rockville, MD 20852. Submit electronic comments to *http://www.regulations.gov*. Identify comments with the docket number found in brackets in the heading of this document.

FOR FURTHER INFORMATION CONTACT: Jan Welch, GHTF, Study Group 4, Office of Compliance, Center for Devices and Radiological Health (HFZ–320), Food

and Drug Administration, 2094 Gaither Rd., Rockville, MD 20850, 240–276–0115.

SUPPLEMENTARY INFORMATION:

I. Background

FDA has participated in a number of activities to promote the international harmonization of regulatory requirements. In September 1992, a meeting was held in Nice, France by senior regulatory officials to evaluate international harmonization. This meeting led to the development of the organization now known as the Global Harmonization Task Force (GHTF) to facilitate harmonization. Subsequent meetings have been held on a yearly basis in various locations throughout the world.

The GHTF is a voluntary group of representatives from national medical device regulatory authorities and the regulated industry. Since its inception, the GHTF has been comprised of representatives from five founding members grouped into three geographical areas: Europe, Asia-Pacific, and North America, each of which actively regulates medical devices using their own unique regulatory framework.

The objective of the GHTF is to encourage convergence at the global level of regulatory systems of medical devices to facilitate trade while preserving the right of participating members to address the protection of public health by regulatory means considered most suitable. One of the ways this objective is achieved is by identifying and developing areas of international cooperation to facilitate progressive reduction of technical and regulatory differences in systems established to regulate medical devices. In an effort to accomplish these objectives, the GHTF formed five study groups to draft documents and carry on other activities designed to facilitate global harmonization. This notice is a result of a document that has been developed by one of the Study Groups (4).

Study Group 4 was initially tasked with the responsibility of developing guidance documents on quality systems auditing practices. As a result of its efforts, this group has developed document SG4/N33R16:2007. The final document (SG4/N33R16:2007) entitled ''Guidelines for Regulatory Auditing of Quality Management Systems of Medical Device Manufacturers—Part 3: Regulatory Audit Reports'' provides a structure for audit reports used in multiple jurisdictions, promoting consistency and uniformity and should assist the auditor in preparing a report for use by multiple regulators and/or auditing organizations. Having reports that are consistent in content should facilitate the review and exchange of audit reports. Acceptance of audit reports by multiple regulators should eventually reduce the number of audits for manufacturers. This document was announced as available for comment on February 6, 2007 (72 FR 5443). GHTF received several comments on the document proposed on February 6, 2007. In response to the comments, GHTF made changes to clarify the document.

II. Significance of Guidance

This document represents recommendations from the GHTF study groups and does not describe regulatory requirements. FDA is making this document available so that industry and other members of the public may express their views and opinions.

III. Electronic Access

Persons interested in obtaining a copy of the guidance may do so by using the Internet. The Center for Devices and Radiological Health (CDRH) maintains an entry on the Internet for easy access to information including text, graphics, and files that may be downloaded to a personal computer with Internet access. Updated on a regular basis, the CDRH home page includes device safety alerts, **Federal Register** reprints, information on premarket submissions (including lists of approved applications and manufacturers' addresses), small manufacturer's assistance, information on video conferencing and electronic submissions, Mammography Matters, and other device-oriented information. Information on the GHTF may be accessed at *http://www.ghtf.org*. The CDRH Web site may be accessed at *http://www.fda.gov/cdrh*.

IV. Paperwork Reduction Act of 1995

For this final document, FDA concludes that there are no collection of information requirements under the Paperwork Reduction Act of 1995.

V. Comments

Interested persons may submit to the Division of Dockets Management (see **ADDRESSES**), written or electronic comments regarding this document. Submit a single copy of electronic comments or two paper copies of any mailed comments, except that individuals may submit one paper copy. Comments are to be identified with the docket number found in brackets in the heading of this document. Received comments may be seen in the Division of Dockets Management between 9 a.m. and 4 p.m., Monday through Friday.

Please note that on January 15, 2008, the FDA Web site transitioned to the Federal Dockets Management System (FDMS). FDMS is a Government-wide, electronic docket management system. Electronic submissions will be accepted by FDA through FDMS only.

Dated: March 14, 2008.

Jeffrey Shuren,

Assistant Commissioner for Policy.

[FR Doc. E8–5927 Filed 3–24–08; 8:45 am]

BILLING CODE 4160–01–S

DEPARTMENT OF HEALTH AND HUMAN SERVICES

National Institutes of Health

National Institute of Child Health and Human Development; Notice of Closed Meeting

Pursuant to section 10(d) of the Federal Advisory Committee Act, as amended (5 U.S.C. Appendix 2), notice is hereby given of the following meeting.

The meeting will be closed to the public in accordance with the provisions set forth in sections 552b(c)(4) and 552b(c)(6), Title 5 U.S.C., as amended. The grant applications and the discussions could disclose confidential trade secrets or commercial property such as patentable material, and personal information concerning individuals associated with the grant applications, the disclosure of which would constitute a clearly unwarranted invasion of personal privacy.

Name of Committee: National Institute of Child Health and Human Development Special Emphasis Panel; Down Syndrome.

Date: April 18, 2008.

Time: 1 p.m. to 3:30 p.m.

Agenda: To review and evaluate grant applications.

Place: National Institutes of Health, 6100 Executive Boulevard, 5B01, Rockville, MD 20852 (Telephone Conference Call).

Contact Person: Norman Chang, Ph.D., Scientific Review Administrator, Division of Scientific Review, National Institute of Child Health and Human Development, NIH, 6100 Executive Blvd., Room 5B01 Bethesda, MD 20892, (301) 496–1485, *changnmaiL.nih.gov*.

(Catalogue of Federal Domestic Assistance Program Nos. 93.864, Population Research; 93.865, Research for Mothers and Children; 93.929, Center for Medical Rehabilitation Research; 93.209, Contraception and Infertility Loan Repayment Program, National Institutes of Health, HHS)

Dated: March 17, 2008.

Anna Snouffer,

Acting Director, Office of Federal Advisory Committee Policy.

[FR Doc. E8–5818 Filed 3–24–08; 8:45 am]

BILLING CODE 4140–01–M

DEPARTMENT OF HEALTH AND HUMAN SERVICES

National Institutes of Health

National Institute of Child Health and Human Development; Notice of Closed Meeting

Pursuant to section 10(d) of the Federal Advisory Committee Act, as amended (5 U.S.C. Appendix 2), notice is hereby given of the following meeting.

The meeting will be closed to the public in accordance with the provisions set forth in sections 552b(c)(4) and 552b(c)(6), Title 5 U.S.C., as amended. The grant applications and the discussions could disclose confidential trade secrets or commercial property such as patentable material, and personal information concerning individuals associated with the grant applications, the disclosure of which would constitute a clearly unwarranted invasion of personal privacy.

Name of Committee: National Institute of Child Health and Human Development Special Emphasis Panel; Growth and Development of the Nervous System: Molecular Mechanisms.

Date: April 10, 2008.

Time: 1 p.m. to 3 p.m.

Agenda: To review and evaluate grant applications.

Place: National Institutes of Health, 6100 Executive Boulevard, 5B01, Rockville, MD 20852 (Telephone Conference Call).

Contact Person: Gopal M. Bhatnagar, PhD, Scientific Review Administrator, National Institute of Child Health and Human Development, National Institutes of Health, 6100 Executive Boulevard, Bldg. Rm. 5B01, Rockville, MD 20852, (301) 435–6889, *bhatnagg@mail.nih.gov*.

This notice is being published less than 15 days prior to the meeting due to the timing limitations imposed by the review and funding cycle.

(Catalogue of Federal Domestic Assistance Program Nos. 93.864, Population Research; 93.865, Research for Mothers and Children; 93.929, Center for Medical Rehabilitation Research; 93.209, Contraception and Infertility Loan Repayment Program, National Institutes of Health, HHS)

Dated: March 17, 2008.

Anna Snouffer,

Acting Director, Office of Federal Advisory Committee Policy.

[FR Doc. E8–5822 Filed 3–24–08; 8:45 am]

BILLING CODE 4140–01–M

DEPARTMENT OF HEALTH AND HUMAN SERVICES

National Institutes of Health

National Institute of Child Health and Human Development; Notice of Closed Meeting

Pursuant to section 10(d) of the Federal Advisory Committee Act, as amended (5 U.S.C. Appendix 2), notice is hereby given of the following meeting.

The meeting will be closed to the public in accordance with the provisions set forth in sections 552b(c)(4) and 552b(c)(6), Title 5 U.S.C., as amended. The grant applications and the discussions could disclose confidential trade secrets or commercial property such as patentable material, and personal information concerning individuals associated with the grant applications, the disclosure of which would constitute a clearly unwarranted invasion of personal privacy.

Name of Committee: National Institute of Child Health and Human Development Special Emphasis Panel; Chronic Aberrant Behavior.

Date: April 14, 2008.

Time: 12:30 p.m. to 5 p.m.

Agenda: To review and evaluate grant applications.

Place: National Institutes of Health, 6100 Executive Boulevard 5B01, Rockville, MD 20852 (Telephone Conference Call).

Contact Person: Marita R. Hopmann, PhD, Scientific Review Administrator, Division of Scientific Review, National Institute of Child Health And Human Development, 6100 Building, Room 5B01, Bethesda, MD 20892, (301) 435–6911, *hopmannmmail.nih.gov*.

(Catalogue of Federal Domestic Assistance Program Nos. 93.864, Population Research; 93.865, Research for Mothers and Children; 93.929, Center for Medical Rehabilitation Research; 93.209, Contraception and Infertility Loan Repayment Program, National Institutes of Health, HHS)

Dated: March 17, 2008.

Anna Snouffer,

Acting Director, Office of Federal Advisory Committee Policy.

[FR Doc. E8–5823 Filed 3–24–08; 8:45 am]

BILLING CODE 4140–01–M

DEPARTMENT OF HOMELAND SECURITY

U.S. Customs and Border Protection

Proposed Collection; Comment Request; Alien Crewman Landing Permit

AGENCY: U.S. Customs and Border Protection, Department of Homeland Security.

ACTION: 60-Day Notice and request for comments; Extension of existing collection of information: 1651–0114.

SUMMARY: As part of its continuing effort to reduce paperwork and respondent burden, U.S. Customs and Border Protection (CBP) invites the general public and other Federal agencies to comment on an information collection requirement concerning the Alien Crewman Landing Permit. This request for comment is being made pursuant to the Paperwork Reduction Act (Pub. L. 104–13; 44 U.S.C. 3505(c)(2)).

DATES: Written comments should be received on or before May 27, 2008, to be assured of consideration.

ADDRESSES: Direct all written comments to U.S. Customs and Border Protection, Information Services Group, Room 3.2.C, 1300 Pennsylvania Avenue, NW., Washington, DC 20229.

FOR FURTHER INFORMATION CONTACT: Requests for additional information should be directed to U.S. Customs and Border Protection, Attn.: Tracey Denning, Room 3.2.C, 1300 Pennsylvania Avenue, NW., Washington, DC 20229, Tel. (202) 344–1429.

SUPPLEMENTARY INFORMATION: CBP invites the general public and other Federal agencies to comment on proposed and/or continuing information collections pursuant to the Paperwork Reduction Act (Pub. L. 104–13; 44 U.S.C. 3505(c)(2)). The comments should address: (a) Whether the collection of information is necessary for the proper performance of the functions of the agency, including whether the information shall have practical utility; (b) the accuracy of the agency's estimates of the burden of the collection of information; (c) ways to enhance the quality, utility, and clarity of the information to be collected; (d) ways to minimize the burden including the use of automated collection techniques or the use of other forms of information technology; and (e) estimates of capital or start-up costs and costs of operations, maintenance, and purchase of services to provide information. The comments that are submitted will be summarized and included in the CBP request for Office of Management and Budget (OMB) approval. All comments will become a matter of public record. In this document CBP is soliciting comments concerning the following information collection:

Title: Alien Crewman Landing Permit.

OMB Number: 1651–0114.

Form Number: Form I–95.

Abstract: This collection of information is used by CBP to document conditions and limitations imposed upon an alien crewman applying for benefits under Section 251 of the Immigration and Nationality Act.

Current Actions: There are no changes to the information collection. This submission is being submitted to extend the expiration date.

Type of Review: Extension (without change).

Affected Public: Individuals.

Estimated Number of Respondents: 433,000.

Estimated Number of Responses: 433,000.

Estimated Time per Response: 5 minutes.

Estimated Total Annual Burden Hours: 35,939.

Dated: March 18, 2008.

Tracey Denning,

Agency Clearance Officer, Information Services Group.

[FR Doc. E8–6011 Filed 3–24–08; 8:45 am]

BILLING CODE 9111–14–P

DEPARTMENT OF HOMELAND SECURITY

Customs and Border Protection

Agency Information Collection Activities: Entry of Articles for Exhibition

AGENCY: U.S. Customs and Border Protection, Department of Homeland Security.

ACTION: 30-Day Notice and request for comments; Extension of an existing information collection: 1651–0037.

ACTION: Proposed collection; comments requested.

SUMMARY: U.S. Customs and Border Protection (CBP) of the Department of Homeland Security has submitted the following information collection request to the Office of Management and Budget (OMB) for review and approval in accordance with the Paperwork Reduction Act: Entry of Articles for Exhibition. This is a proposed extension of an information collection that was previously approved. CBP is proposing that this information collection be extended with no change to the burden hours. This document is published to obtain comments from the public and affected agencies. This proposed information collection was previously published in the **Federal Register** (73 FR 3984) on January 23, 2008, allowing for a 60-day comment period. This notice allows for an additional 30 days for public comments. This process is conducted in accordance with 5 CFR 1320.10.

DATES: Written comments should be received on or before April 24, 2008.

ADDRESSES: Interested persons are invited to submit written comments on the proposed information collection to the Office of Information and Regulatory Affairs, Office of Management and Budget. Comments should be addressed to Nathan Lesser, Desk Officer, Department of Homeland Security/ Customs and Border Protection, and sent via electronic mail to *oira_submission@omb.eop.gov* or faxed to (202) 395–6974.

SUPPLEMENTARY INFORMATION: U.S. Customs and Border Protection (CBP) encourages the general public and affected Federal agencies to submit written comments and suggestions on proposed and/or continuing information collection requests pursuant to the Paperwork Reduction Act (Pub. L. 104–13). Your comments should address one of the following four points:

(1) Evaluate whether the proposed collection of information is necessary for the proper performance of the functions of the agency/component, including whether the information will have practical utility;

(2) Evaluate the accuracy of the agencies/components estimate of the burden of the proposed collection of information, including the validity of the methodology and assumptions used;

(3) Enhance the quality, utility, and clarity of the information to be collected; and

(4) Minimize the burden of the collections of information on those who are to respond, including the use of appropriate automated, electronic, mechanical, or other technological collection techniques or other forms of information technology, e.g., permitting electronic submission of responses.

Title: Entry of Articles for Exhibition.

OMB Number: 1651–0037.

Form Number: None.

Abstract: This information is used by CBP to substantiate that the goods imported for exhibit have been approved for entry by the Department of Commerce.

Current Actions: There are no changes to the information collection. This submission is being submitted to extend the expiration date.

Type of Review: Extension (without change).

Affected Public: Businesses, Individuals, Institutions.

Estimated Number of Respondents: 40.

Estimated Number of Responses: 1,600.

Estimated Time Per Response: 20 minutes.

Estimated Total Annual Burden Hours: 530.

If additional information is required contact: Tracey Denning, U.S. Customs and Border Protection, 1300 Pennsylvania Avenue NW., Room 3.2.C, Washington, DC 20229, at 202–344–1429.

Dated: March 18, 2008.

Tracey Denning,

Agency Clearance Officer, Information Services Branch.

[FR Doc. E8–6016 Filed 3–24–08; 8:45 am]

BILLING CODE 9111–14–P

DEPARTMENT OF HOMELAND SECURITY

Customs and Border Protection

Proposed Collection; Comment Request Documentation Requirements for Articles Entered Under Various Special Tariff Treatment Provisions

AGENCY: U.S. Customs and Border Protection, Department of Homeland Security.

ACTION: 60-Day Notice and request for comments; Extension of existing collection of information: 1651–0067.

SUMMARY: As part of its continuing effort to reduce paperwork and respondent burden, U.S. Customs and Border Protection (CBP) invites the general public and other Federal agencies to comment on an information collection requirement concerning Documentation Requirements for Articles Entered Under Various Special Tariff Treatment Provisions. This request for comment is being made pursuant to the Paperwork Reduction Act (Pub. L. 104–13; 44 U.S.C. 3505(c)(2)).

DATES: Written comments should be received on or before May 27, 2008, to be assured of consideration.

ADDRESSES: Direct all written comments to U.S. Customs and Border Protection, Information Services Group, Attn.: Tracey Denning, 1300 Pennsylvania Avenue, NW., Room 3.2C, Washington, DC 20229.

FOR FURTHER INFORMATION CONTACT: Requests for additional information should be directed to U.S. Customs and Border Protection, Attn.: Tracey Denning, 1300 Pennsylvania Avenue NW., Room 3.2C, Washington, DC 20229, Tel. (202) 344–1429.

SUPPLEMENTARY INFORMATION: CBP invites the general public and other Federal agencies to comment on proposed and/or continuing information

collections pursuant to the Paperwork Reduction Act (Pub. L. 104–13; 44 U.S.C. 3505(c)(2)). The comments should address: (a) Whether the collection of information is necessary for the proper performance of the functions of the agency, including whether the information shall have practical utility; (b) the accuracy of the agency's estimates of the burden of the collection of information; ways to enhance the quality, utility, and clarity of the information to be collected; (d) ways to minimize the burden including the use of automated collection techniques or the use of other forms of information technology; and (e) estimates of capital or start-up costs and costs of operations, maintenance, and purchase of services to provide information. The comments that are submitted will be summarized and included in the CBP request for Office of Management and Budget (OMB) approval. All comments will become a matter of public record. In this document CBP is soliciting comments concerning the following information collection:

Title: Documentation Requirements for Articles Entered Under Various Special Tariff Treatment Provisions.

OMB Number: 1651–0067.

Form Number: N/A.

Abstract: This collection is used to ensure revenue collections and to provide duty free entry of merchandise eligible for reduced duty treatment under provisions of Harmonized Tariff Schedule of the United States.

Current Actions: There are no changes to the information collection. This submission is being submitted to extend the expiration date.

Type of Review: Extension (without change).

Affected Public: Businesses, Individuals, Institutions.

Estimated Number of Respondents: 19,433.

Estimated Number of Responses: 58,300.

Estimated Time per Response: 15 minutes.

Estimated Total Annual Burden Hours: 14,575.

Dated: March 18, 2008.

Tracey Denning,

Agency Clearance Officer, Information Services Group.

[FR Doc. E8–6021 Filed 3–24–08; 8:45 am]

BILLING CODE 9111–14–P

DEPARTMENT OF HOMELAND SECURITY

U.S. Customs and Border Protection

Proposed Collection; Comment Request; Application for Waiver of Passport and/or Visa (Form I–193)

AGENCY: U.S. Customs and Border Protection, Department of Homeland Security.

ACTION: 60-Day Notice and request for comments; Extension of existing collection of information: 1651–0107.

SUMMARY: As part of its continuing effort to reduce paperwork and respondent burdens, the U.S. Customs and Border Protection (CBP) invites the general public and other Federal agencies to comment on an information collection requirement concerning the Application for Waiver of Passport and/or Visa (Form I–193). This request for comment is being made pursuant to the Paperwork Reduction Act (Public Law 104–13; 44 U.S.C. 3505(c)(2)).

DATES: Written comments should be received on or before May 27, 2008, to be assured of consideration.

ADDRESSES: Direct all written comments to the U.S. Customs and Border Protection, Information Services Group, Room 3.2.C, 1300 Pennsylvania Avenue, NW., Washington, DC 20229.

FOR FURTHER INFORMATION CONTACT: Requests for additional information should be directed to the U.S. Customs and Border Protection, Attn.: Tracey Denning, Room 3.2.C, 1300 Pennsylvania Avenue, NW., Washington, DC 20229, Tel. (202) 344–1429.

SUPPLEMENTARY INFORMATION: CBP invites the general public and other Federal agencies to comment on proposed and/or continuing information collections pursuant to the Paperwork Reduction Act (Pub. L. 104–13; 44 U.S.C. 3505(c)(2)). The comments should address the accuracy of the burden estimates and ways to minimize the burden including the use of automated collection techniques or the use of other forms of information technology, as well as other relevant aspects of the information collection. The comments that are submitted will be summarized and included in the CBP request for Office of Management and Budget (OMB) approval. All comments will become a matter of public record. In this document CBP is soliciting comments concerning the following information collection:

Title: Application for Waiver of Passport and/or Visa.

OMB Number: 1651–0107.

Form Number: I–193.

Abstract: This information collection is used by CBP to determine an applicant's eligibility to enter the United States. This form is used by aliens who wish to waive the documentary requirements for passport's and/or visas due to an unforeseen emergency.

Current Actions: There are no changes to the information collection. This submission is being submitted to extend the expiration date.

Type of Review: Extension (without change).

Affected Public: Individuals.

Estimated Number of Respondents: 25,000.

Estimated Number of Responses: 25,000.

Estimated Time per Response: 10 minutes.

Estimated Total Annual Burden Hours: 4,150.

Dated: March 18, 2008.

Tracey Denning,

Agency Clearance Officer, Information Services Group.

[FR Doc. E8–6024 Filed 3–24–08; 8:45 am]

BILLING CODE 9111–14–P

DEPARTMENT OF HOMELAND SECURITY

U.S. Customs and Border Protection

Agency Information Collection Activities: Certificate of Compliance for Turbine Fuel Withdrawal

AGENCY: U.S. Customs and Border Protection, Department of Homeland Security.

ACTION: 30-Day Notice and request for comments; Extension of an existing information collection: 1651–0072.

ACTION: Proposed collection; comments requested.

SUMMARY: U.S. Customs and Border Protection (CBP) of the Department of Homeland Security has submitted the following information collection request to the Office of Management and Budget (OMB) for review and approval in accordance with the Paperwork Reduction Act: Certificate of Compliance for Turbine Fuel Withdrawal. This is a proposed extension of an information collection that was previously approved. CBP is proposing that this information collection be extended with no change to the burden hours. This document is published to obtain comments form the public and affected agencies. This proposed information collection was

previously published in the **Federal Register** (73 FR 3981) on January 23, 2008, allowing for a 60-day comment period. This notice allows for an additional 30 days for public comments. This process is conducted in accordance with 5 CFR 1320.10.

DATES: Written comments should be received on or before April 24, 2008.

ADDRESSES: Interested persons are invited to submit written comments on the proposed information collection to the Office of Information and Regulatory Affairs, Office of Management and Budget. Comments should be addressed to Nathan Lesser, Desk Officer, Department of Homeland Security/ Customs and Border Protection, and sent via electronic mail to *oira_submission@omb.eop.gov* or faxed to (202) 395–6974.

SUPPLEMENTARY INFORMATION: U.S. Customs and Border Protection (CBP) encourages the general public and affected Federal agencies to submit written comments and suggestions on proposed and/or continuing information collection requests pursuant to the Paperwork Reduction Act (Pub. L. 104–13). Your comments should address one of the following four points:

(1) Evaluate whether the proposed collection of information is necessary for the proper performance of the functions of the agency/component, including whether the information will have practical utility;

(2) Evaluate the accuracy of the agencies/components estimate of the burden of the proposed collection of information, including the validity of the methodology and assumptions used;

(3) Enhance the quality, utility, and clarity of the information to be collected; and

(4) Minimize the burden of the collections of information on those who are to respond, including the use of appropriate automated, electronic, mechanical, or other technological collection techniques or other forms of information technology, e.g., permitting electronic submission of responses.

Title: Certificate of Compliance for Turbine Fuel Withdrawal.

OMB Number: 1651–0072.

Form Number: None.

Abstract: This information is collected to ensure regulatory compliance for Turbine Fuel Withdrawals to protect revenue collections.

Current Actions: There are no changes to the information collection. This submission is being submitted to extend the expiration date.

Type of Review: Extension (without change).

Affected Public: Businesses, Institutions.

Estimated Number of Respondents: 30.

Estimated Number of Responses: 360.

Estimated Time per Respondent: 1 hour.

Estimated Total Annual Burden Hours: 360.

If additional information is required contact: Tracey Denning, U.S. Customs and Border Protection, 1300 Pennsylvania Avenue, NW., Room 3.2.C, Washington, DC 20229, at 202–344–1429.

Dated: March 18, 2008.

Tracey Denning,

Agency Clearance Officer, Information Services Branch.

[FR Doc. E8–6025 Filed 3–24–08; 8:45 am]

BILLING CODE 9111–14–P

DEPARTMENT OF HOMELAND SECURITY

U.S. Customs and Border Protection

Proposed Collection; Comment Request; Drawback Process Regulations and Entry Collection Documents

AGENCY: U.S. Customs and Border Protection, Department of Homeland Security.

ACTION: 60-Day Notice and request for comments; Extension of existing collection of information: 1651–0075.

SUMMARY: As part of its continuing effort to reduce paperwork and respondent burden, U.S. Customs and Border Protection (CBP) invites the general public and other Federal agencies to comment on an information collection requirement concerning Drawback Process Regulations and Entry Collection Documents. This request for comment is being made pursuant to the Paperwork Reduction Act (P. L. 104–13; 44 U.S.C. 3505(c)(2)).

DATES: Written comments should be received on or before May 27, 2008, to be assured of consideration.

ADDRESSES: Direct all written comments to U.S. Customs and Border Protection, Information Services Group, Attn.: Tracey Denning, 1300 Pennsylvania Avenue, NW., Room 3.2.C, Washington, DC 20229.

FOR FURTHER INFORMATION CONTACT: Requests for additional information should be directed to U.S. Customs and Border Protection, Attn.: Tracey Denning, 1300 Pennsylvania Avenue, NW., Room 3.2.C, Washington, DC 20229, Tel. (202) 344–1429.

SUPPLEMENTARY INFORMATION: CBP invites the general public and other Federal agencies to comment on proposed and/or continuing information collections pursuant to the Paperwork Reduction Act of 1995 (Pub. L. 104–13; 44 U.S.C. 3505(c)(2)). The comments should address: (a) Whether the collection of information is necessary for the proper performance of the functions of the agency, including whether the information shall have practical utility; (b) the accuracy of the agency's estimates of the burden of the collection of information; (c) ways to enhance the quality, utility, and clarity of the information to be collected; (d) ways to minimize the burden including the use of automated collection techniques or the use of other forms of information technology; and (e) estimates of capital or start-up costs and costs of operations, maintenance, and purchase of services to provide information. The comments that are submitted will be summarized and included in the CBP request for Office of Management and Budget (OMB) approval. All comments will become a matter of public record. In this document CBP is soliciting comments concerning the following information collection:

Title: Drawback Process Regulations and Entry Collection Documents.

OMB Number: 1651–0075.

Form Number: Forms CBP–7551, 7552, 7553.

Abstract: The information is to be used by CBP officers to expedite the filing and processing of drawback claims, while maintaining necessary enforcement information to maintain effective administrative oversight over the drawback program.

Current Actions: There are no changes to the information collection. This submission is being submitted to extend the expiration date.

Type of Review: Extension (without change).

Affected Public: Businesses, Institutions.

Estimated Number of Respondents: 8,150.

Estimated Number of Responses: 163,000.

Estimated Time per Response: 33 minutes.

Estimated Total Annual Burden Hours: 90,000.

Dated: March 18, 2008.

Tracey Denning,

Agency Clearance Officer, Information Services Branch.

[FR Doc. E8–6026 Filed 3–24–08; 8:45 am]

BILLING CODE 9111–14–P

DEPARTMENT OF HOMELAND SECURITY

U.S. Customs and Border Protection

Proposed Collection; Comment Request; Automated Clearinghouse Credit

AGENCY: U.S. Customs and Border Protection, Department of Homeland Security.

ACTION: 60-Day Notice and request for comments; Extension of existing collection of information: 1651–0078.

SUMMARY: As part of its continuing effort to reduce paperwork and respondent burden, U.S. Customs and Border Protection (CBP) invites the general public and other Federal agencies to comment on an information collection requirement concerning the Automated Clearinghouse Credit. This request for comment is being made pursuant to the Paperwork Reduction Act of 1995 (P. L. 104–13; 44 U.S.C. 3505(c)(2)).

DATES: Written comments should be received on or before May 27, 2008, to be assured of consideration.

ADDRESS: Direct all written comments to U.S. Customs and Border Protection, Information Services Group, Attn.: Tracey Denning, 1300 Pennsylvania Avenue, NW., Room 3.2.C, Washington, DC 20229.

FOR FURTHER INFORMATION CONTACT: Requests for additional information should be directed to U.S. Customs and Border Protection, Attn.: Tracey Denning, 1300 Pennsylvania Avenue, NW., Room 3.2. C, Washington, DC 20229, Tel. (202) 344–1429.

SUPPLEMENTARY INFORMATION: CBP invites the general public and other Federal agencies to comment on proposed and/or continuing information collections pursuant to the Paperwork Reduction Act of 1995 (Pub. L. 104–13; 44 U.S.C. 3505(c)(2)). The comments should address: (a) Whether the collection of information is necessary for the proper performance of the functions of the agency, including whether the information shall have practical utility; (b) the accuracy of the agency's estimates of the burden of the collection of information; (c) ways to enhance the quality, utility, and clarity of the information to be collected; (d) ways to minimize the burden including the use of automated collection techniques or the use of other forms of information technology; and (e) estimates of capital or start-up costs and costs of operations, maintenance, and purchase of services to provide information. The comments that are submitted will be summarized and included in the CBP request for Office of Management and Budget (OMB) approval. All comments will become a matter of public record. In this document CBP is soliciting comments concerning the following information collection:

Title: Automated Clearinghouse Credit.

OMB Number: 1651–0078.

Form Number: N/A.

Abstract: The information is to be used by CBP to send information to the company (such as revised format requirements), and to contact participating companies if there is a payment problem.

Current Actions: There are no changes to the information collection. This submission is being submitted to extend the expiration date.

Type of Review: Extension (without change).

Affected Public: Businesses, Institutions.

Estimated Number of Respondents: 65.

Estimated Number of Responses: 3,000.

Estimated Time per Response: 5 minutes.

Estimated Total Annual Burden Hours: 249.

Dated: March 18, 2008.

Tracey Denning,

Agency Clearance Officer, Information Services Branch.

[FR Doc. E8–6028 Filed 3–24–08; 8:45 am]

BILLING CODE 9111–14–P

DEPARTMENT OF HOMELAND SECURITY

Customs and Border Protection

Proposed Collection; Comment Request; Permit To Transfer Containers to a Container Station

AGENCY: U.S. Customs and Border Protection, Department of Homeland Security.

ACTION: 60-Day Notice and request for comments; Extension of existing collection of information: 1651–0049.

AGENCY: U.S. Customs and Border Protection (CBP), Department of Homeland Security (DHS).

ACTION: Notice and request for comments.

SUMMARY: As part of its continuing effort to reduce paperwork and respondent burden, CBP invites the general public and other Federal agencies to comment on an information collection requirement concerning the Permit to Transfer Containers to a Container Station. This request for comment is being made pursuant to the Paperwork Reduction Act (Pub. L. 104–13; 44 U.S.C. 3506(c)(2)(A)).

DATES: Written comments should be received on or before May 27, 2008, to be assured of consideration.

ADDRESSES: Direct all written comments to CBP, Information Services Group, Attn.: Tracey Denning, 1300 Pennsylvania Avenue, NW., Room 3.2C, Washington, DC 20229.

FOR FURTHER INFORMATION CONTACT: Requests for additional information should be directed to CBP, Attn.: Tracey Denning, 1300 Pennsylvania Avenue, NW., Room 3.2.C, Washington, DC 20229, Tel. (202) 344–1429.

SUPPLEMENTARY INFORMATION: CBP invites the general public and other Federal agencies to comment on proposed and/or continuing information collections pursuant to the Paperwork Reduction Act (Pub. L. 104–13; 44 U.S.C. 3505(c)(2)). The comments should address: (a) Whether the collection of information is necessary for the proper performance of the functions of the agency, including whether the information shall have practical utility; (b) the accuracy of the agency's estimates of the burden of the collection of information; (c) ways to enhance the quality, utility, and clarity of the information to be collected; (d) ways to minimize the burden including the use of automated collection techniques or the use of other forms of information technology; and (e) estimates of capital or start-up costs and costs of operations, maintenance, and purchase of services to provide information. The comments that are submitted will be summarized and included in the CBP request for Office of Management and Budget (OMB) approval. All comments will become a matter of public record. In this document CBP is soliciting comments concerning the following information collection:

Title: Permit to Transfer Containers to a Container Station.

OMB Number: 1651–0049.

Form Number: N/A.

Abstract: This information collection is needed in order for a container station operator to receive a permit to transfer a container or containers to a container station, he/she must furnish a list of names, addresses, etc., of the persons employed by them upon demand by CBP officials.

Current Actions: There are no changes to the information collection. This submission is being submitted to extend the expiration date.

Type of Review: Extension (without change).

Affected Public: Business or other for-profit institutions.

Estimated Number of Respondents: 350.

Estimated Number of Responses: 1,400.

Estimated Time Per Respondent: 20 minutes.

Estimated Total Annual Burden Hours: 466.

Dated: March 18, 2008.

Tracey Denning,

Agency Clearance Officer, Information Services Group.

[FR Doc. E8–6050 Filed 3–24–08; 8:45 am]

BILLING CODE 9111–14–P

DEPARTMENT OF HOMELAND SECURITY

U.S. Customs and Border Protection

Agency Information Collection Activities: Record of Foreign Vessel Repair

AGENCY: U.S. Customs and Border Protection, Department of Homeland Security.

ACTION: 30-Day Notice and request for comments; Extension of an existing information collection: 1651–0027.

ACTION: Proposed collection; comments requested.

SUMMARY: U.S. Customs and Border Protection (CBP) of the Department of Homeland Security has submitted the following information collection request to the Office of Management and Budget (OMB) for review and approval in accordance with the Paperwork Reduction Act: Record of Foreign Vessel Repair. This is a proposed extension of an information collection that was previously approved. CBP is proposing that this information collection be extended with no change to the burden hours. This document is published to obtain comments from the public and affected agencies. This proposed information collection was previously published in the **Federal Register** (73 FR 3982) on January 23, 2008, allowing for a 60-day comment period. This notice allows for an additional 30 days for public comments. This process is conducted in accordance with 5 CFR 1320.10.

DATES: Written comments should be received on or before April 24, 2008.

ADDRESSES: Interested persons are invited to submit written comments on the proposed information collection to the Office of Information and Regulatory Affairs, Office of Management and Budget. Comments should be addressed to Nathan Lesser, Desk Officer, Department of Homeland Security/ Customs and Border Protection, and sent via electronic mail to *oira_submission@omb.eop.gov* or faxed to (202) 395–6974.

SUPPLEMENTARY INFORMATION: U.S. Customs and Border Protection (CBP) encourages the general public and affected Federal agencies to submit written comments and suggestions on proposed and/or continuing information collection requests pursuant to the Paperwork Reduction Act (Pub. L. 104–13). Your comments should address one of the following four points:

(1) Evaluate whether the proposed collection of information is necessary for the proper performance of the functions of the agency/component, including whether the information will have practical utility;

(2) Evaluate the accuracy of the agencies/components estimate of the burden of the proposed collection of information, including the validity of the methodology and assumptions used;

(3) Enhance the quality, utility, and clarity of the information to be collected; and

(4) Minimize the burden of the collections of information on those who are to respond, including the use of appropriate automated, electronic, mechanical, or other technological collection techniques or other forms of information technology, e.g., permitting electronic submission of responses.

Title: Record of Foreign Vessel Repair.

OMB Number: 1651–0027.

Form Number: CBP Form 226.

Abstract: This collection of information is necessary to ensure the collection of applicable duties on all equipment, parts, or materials purchased, and repairs made to U.S. Flag vessels outside the United States.

Current Actions: There are no changes to the information collection. This submission is being submitted to extend the expiration date.

Type of Review: Extension (without change).

Affected Public: Businesses, Individuals.

Estimated Number of Respondents: 200.

Estimated Total Responses: 2,000.

Estimated Time per Response: 45 minutes.

Estimated Total Annual Burden Hours: 1,500.

If additional information is required contact: Tracey Denning, U.S. Customs and Border Protection, 1300 Pennsylvania Avenue, NW., Room 3.2.C, Washington, DC 20229, at 202–344–1429.

Dated: March 18, 2008.

Tracey Denning,

Agency Clearance Officer, Information Services Branch.

[FR Doc. E8–6069 Filed 3–24–08; 8:45 am]

BILLING CODE 9111–14–P

DEPARTMENT OF HOMELAND SECURITY

U.S. Customs and Border Protection

Proposed Collection; Comment Request; Certificate of Origin

AGENCY: U.S. Customs and Border Protection, Department of Homeland Security.

ACTION: 60-Day Notice and request for comments; Extension of existing collection of information: 1651–0016.

SUMMARY: As part of its continuing effort to reduce paperwork and respondent burden, CBP invites the general public and other Federal agencies to comment on an information collection requirement concerning the Certificate of Origin. This request for comment is being made pursuant to the Paperwork Reduction Act (Pub. L. 104–13; 44 U.S.C. 3505(c)(2)).

DATES: Written comments should be received on or before May 27, 2008 to be assured of consideration.

ADDRESSES: Direct all written comments U.S. Customs and Border Protection (CBP), Information Services Group, Attn.: Tracey Denning, 1300 Pennsylvania Avenue, NW., Room 3.2.C, Washington, DC 20229.

FOR FURTHER INFORMATION CONTACT: Requests for additional information should be directed to U.S. Customs and Border Protection, Attn.: Tracey Denning, 1300 Pennsylvania Avenue, NW., Room 3.2C, Washington, DC 20229, Tel. (202) 344–1429.

SUPPLEMENTARY INFORMATION: CBP invites the general public and other Federal agencies to comment on proposed and/or continuing information collections pursuant to the Paperwork Reduction Act (Pub. L. 104–13; 44 U.S.C. 3505(c)(2)). The comments should address: (a) Whether the collection of information is necessary for the proper performance of the functions of the agency, including whether the information shall have practical utility; (b) the accuracy of the agency's estimates of the burden of the collection of information; (c) ways to enhance the quality, utility, and clarity of the information to be collected; (d)

ways to minimize the burden including the use of automated collection techniques or the use of other forms of information technology; and (e) estimates of capital or start-up costs and costs of operations, maintenance, and purchase of services to provide information. The comments that are submitted will be summarized and included in the CBP request for Office of Management and Budget (OMB) approval. All comments will become a matter of public record. In this document CBP is soliciting comments concerning the following information collection:

Title: Certificate of Origin.

OMB Number: 1651–0016.

Form Number: Customs Form–3229.

Abstract: This certification is required to determine whether an importer is entitled to duty-free for goods which are the growth or product of a U.S. insular possession and which contain foreign materials representing no more than 70 percent of the goods total value.

Current Actions: There are no changes to the information collection. This submission is being submitted to extend the expiration date.

Type of Review: Extension (without change).

Affected Public: Business or other for-profit institutions.

Estimated Number of Respondents: 10.

Estimated Number of Responses: 310.

Estimated Time Per Response: 20 minutes.

Estimated Total Annual Burden Hours: 113.

Dated: March 18, 2008.

Tracey Denning,

Agency Clearance Officer, Information Services Group.

[FR Doc. E8–6070 Filed 3–24–08; 8:45 am]

BILLING CODE 9111–14–P

DEPARTMENT OF HOMELAND SECURITY

U.S. Customs and Border Protection

Proposed Collection; Comment Request; Report of Diversion

AGENCY: U.S. Customs and Border Protection, Department of Homeland Security.

ACTION: 60-Day Notice and request for comments; Extension of existing collection of information: 1651–0025.

SUMMARY: As part of its continuing effort to reduce paperwork and respondent burden, U.S. Customs and Border Protection (CBP) invites the general public and other Federal agencies to comment on an information collection requirement concerning Report of Diversion. This request for comment is being made pursuant to the Paperwork Reduction Act (Pub. L. 104–13; 44 U.S.C. 3505(c)(2)).

DATES: Written comments should be received on or before May 27, 2008 to be assured of consideration.

ADDRESSES: Direct all written comments to U.S. Customs and Border Protection, Information Services Group, Attn.: Tracey Denning, 1300 Pennsylvania Avenue, NW., Room 3.2.C, Washington, DC 20229.

FOR FURTHER INFORMATION CONTACT: Requests for additional information should be directed U.S. Customs and Border Protection, Attn.: Tracey Denning, 1300 Pennsylvania Avenue, NW., Room 3.2C, Washington, DC 20229, Tel. (202) 344–1429.

SUPPLEMENTARY INFORMATION: CBP invites the general public and other Federal agencies to comment on proposed and/or continuing information collections pursuant to the Paperwork Reduction Act (Pub. L. 104–13; 44 U.S.C. 3505(c)(2)). The comments should address: (a) Whether the collection of information is necessary for the proper performance of the functions of the agency, including whether the information shall have practical utility; (b) the accuracy of the agency's estimates of the burden of the collection of information; (c) ways to enhance the quality, utility, and clarity of the information to be collected; (d) ways to minimize the burden including the use of automated collection techniques or the use of other forms of information technology; and (e) estimates of capital or start-up costs and costs of operations, maintenance, and purchase of services to provide information. The comments that are submitted will be summarized and included in the CBP request for Office of Management and Budget (OMB) approval. All comments will become a matter of public record. In this document CBP is soliciting comments concerning the following information collection:

Title: Report of Diversion.

OMB Number: 1651–0025.

Form Number: Form CBP–26.

Abstract: CBP uses Form–26 to track vessels traveling coastwise from U.S ports to other U.S. ports when a change occurs in scheduled itineraries. This is required for enforcement of the Jones Act (46 U.S.C. App. 883) and for continuity of vessel manifest information and permits to proceed actions.

Current Actions: There are no changes to the information collection. This submission is being submitted to extend the expiration date.

Type of Review: Extension (without change).

Affected Public: Businesses, Individuals, Institutions.

Estimated Number of Respondents: 2800.

Estimated Number of Responses: 2800.

Estimated Time Per Response: 5 minutes.

Estimated Total Annual Burden Hours: 233.

Dated: March 18, 2008.

Tracey Denning,

Agency Clearance Officer, Information Services Group.

[FR Doc. E8–6071 Filed 3–24–08; 8:45 am]

BILLING CODE 9111–14–P

DEPARTMENT OF HOMELAND SECURITY

U.S. Customs and Border Protection

Agency Information Collection Activities: Request for Information

AGENCY: U.S. Customs and Border Protection, Department of Homeland Security.

ACTION: 30-Day Notice and request for comments; Extension of an existing information collection: 1651–0023.

ACTION: Proposed collection; comments requested.

SUMMARY: U.S. Customs and Border Protection (CBP) of the Department of Homeland Security has submitted the following information collection request to the Office of Management and Budget (OMB) for review and approval in accordance with the Paperwork Reduction Act: Request for Information. This is a proposed extension of an information collection that was previously approved. CBP is proposing that this information collection be extended with no change to the burden hours. This document is published to obtain comments from the public and affected agencies. This proposed information collection was previously published in the **Federal Register** (73 FR 3981) on January 23, 2008, allowing for a 60-day comment period. This notice allows for an additional 30 days for public comments. This process is conducted in accordance with 5 CFR 1320.10.

DATES: Written comments should be received on or before April 24, 2008.

ADDRESSES: Interested persons are invited to submit written comments on

the proposed information collection to the Office of Information and Regulatory Affairs, Office of Management and Budget. Comments should be addressed to Nathan Lesser, Desk Officer, Department of Homeland Security/ Customs and Border Protection, and sent via electronic mail to: *oira_submission@omb.eop.gov* or faxed to (202) 395–6974.

SUPPLEMENTARY INFORMATION: U.S. Customs and Border Protection (CBP) encourages the general public and affected Federal agencies to submit written comments and suggestions on proposed and/or continuing information collection requests pursuant to the Paperwork Reduction Act (Pub. L. 104–13). Your comments should address one of the following four points:

(1) Evaluate whether the proposed collection of information is necessary for the proper performance of the functions of the agency/component, including whether the information will have practical utility;

(2) Evaluate the accuracy of the agency's/component's estimate of the burden of the proposed collection of information, including the validity of the methodology and assumptions used;

(3) Enhance the quality, utility, and clarity of the information to be collected; and

(4) Minimize the burden of the collections of information on those who are to respond, including the use of appropriate automated, electronic, mechanical, or other technological collection techniques or other forms of information technology, e.g., permitting electronic submission of responses.

Title: Request for Information.

OMB Number: 1651–0023.

Form Number: CBP Form 28.

Abstract: Form CBP–28 is used by CBP personnel to request additional information from importers when the invoice or other documentation provides insufficient information for CBP to carry out its responsibilities to protect revenues.

Current Actions: There are no changes to the information collection. This submission is being submitted to extend the expiration date.

Type of Review: Extension (without change).

Affected Public: Businesses, Individuals, Institutions.

Estimated Number of Respondents: 60,000.

Estimated Time Per Respondent: 1 hour.

Estimated Total Annual Burden Hours: 60,000.

Estimated Total Annualized Cost to the Public: $1,782,000.

If additional information is required contact: Tracey Denning, U.S. Customs and Border Protection, 1300 Pennsylvania Avenue, NW., Room 3.2.C, Washington, DC 20229, at 202–344–1429.

Dated: March 18, 2008.

Tracey Denning,

Agency Clearance Officer, Information Services Branch.

[FR Doc. E8–6077 Filed 3–24–08; 8:45 am]

BILLING CODE 9111–14–P

DEPARTMENT OF HOMELAND SECURITY

U.S. Customs and Border Protection

Agency Information Collection Activities: Ship's Stores Declaration

AGENCY: U.S. Customs and Border Protection, Department of Homeland Security.

ACTION: 30-Day Notice and request for comments; Extension of an existing information collection: 1651–0018.

ACTION: Proposed collection; comments requested.

SUMMARY: The U.S. Customs and Border Protection (CBP) of the Department of Homeland Security has submitted the following information collection request to the Office of Management and Budget (OMB) for review and approval in accordance with the Paperwork Reduction Act: Ship's Stores Declaration. This is a proposed extension of an information collection that was previously approved. CBP is proposing that this information collection be extended with no change to the burden hours. This document is published to obtain comments from the public and affected agencies. This proposed information collection was previously published in the **Federal Register** (73 FR 3983) on January 23, 2008, allowing for a 60-day comment period. This notice allows for an additional 30 days for public comments. This process is conducted in accordance with 5 CFR 1320.10.

DATES: Written comments should be received on or before April 24, 2008.

ADDRESSES: Interested persons are invited to submit written comments on the proposed information collection to the Office of Information and Regulatory Affairs, Office of Management and Budget. Comments should be addressed to Nathan Lesser, Desk Officer, Department of Homeland Security/ Customs and Border Protection, and sent via electronic mail to *oira_submission@omb.eop.gov* or faxed to (202) 395–6974.

SUPPLEMENTARY INFORMATION: U.S. Customs and Border Protection (CBP) encourages the general public and affected Federal agencies to submit written comments and suggestions on proposed and/or continuing information collection requests pursuant to the Paperwork Reduction Act (Pub. L. 104–13). Your comments should address one of the following four points:

(1) Evaluate whether the proposed collection of information is necessary for the proper performance of the functions of the agency/component, including whether the information will have practical utility;

(2) Evaluate the accuracy of the agency's/component's estimate of the burden of the proposed collection of information, including the validity of the methodology and assumptions used;

(3) Enhance the quality, utility, and clarity of the information to be collected; and

(4) Minimize the burden of the collections of information on those who are to respond, including the use of appropriate automated, electronic, mechanical, or other technological collection techniques or other forms of information technology, e.g., permitting electronic submission of responses.

Title: Ship's Stores Declaration.

OMB Number: 1651–0018.

Form Number: CBP Form 1303.

Abstract: This collection is required for audit purposes to ensure that goods used for Ship's Stores can be easily distinguished from other cargo and retain duty free status.

Current Actions: There are no changes to the information collection. This submission is being submitted to extend the expiration date.

Type of Review: Extension (without change).

Affected Public: Businesses, Institutions.

Estimated Number of Respondents: 8,000.

Estimated Number of Responses: 104,300.

Estimated Time Per Response: 15 minutes.

Estimated Total Annual Burden Hours: 26,000.

If additional information is required contact: Tracey Denning, U.S. Customs and Border Protection, 1300 Pennsylvania Avenue, NW., Room 3.2.C, Washington, DC 20229, at 202–344–1429.

Dated: March 18, 2008.

Tracey Denning,

Agency Clearance Officer, Information Services Branch.

[FR Doc. E8–6078 Filed 3–24–08; 8:45 am]

BILLING CODE 9111–14–P

DEPARTMENT OF HOMELAND SECURITY

U.S. Customs and Border Protection

Agency Information Collection Activities: NAFTA Duty Deferral

AGENCY: U.S. Customs and Border Protection, Department of Homeland Security.

ACTION: 30-Day Notice and request for comments; Extension of an existing information collection: 1651–0071.

ACTION: Proposed collection; comments requested.

SUMMARY: U.S. Customs and Border Protection (CBP) of the Department of Homeland Security has submitted the following information collection request to the Office of Management and Budget (OMB) for review and approval in accordance with the Paperwork Reduction Act: NAFTA Duty Deferral. This is a proposed extension of an information collection that was previously approved.

CBP is proposing that this information collection be extended with no change to the burden hours. This document is published to obtain comments from the public and affected agencies. This proposed information collection was previously published in the **Federal Register** (73 FR 3983) on January 23, 2008, allowing for a 60-day comment period. This notice allows for an additional 30 days for public comments. This process is conducted in accordance with 5 CFR 1320.10.

DATES: Written comments should be received on or before April 24, 2008.

ADDRESSES: Interested persons are invited to submit written comments on the proposed information collection to the Office of Information and Regulatory Affairs, Office of Management and Budget. Comments should be addressed to Nathan Lesser, Desk Officer, Department of Homeland Security/ Customs and Border Protection, and sent via electronic mail to: *oira_submission@omb.eop.gov* or faxed to (202) 395–6974.

SUPPLEMENTARY INFORMATION: U.S. Customs and Border Protection (CBP) encourages the general public and affected Federal agencies to submit written comments and suggestions on proposed and/or continuing information collection requests pursuant to the Paperwork Reduction Act (Pub. L. 104–13). Your comments should address one of the following four points:

(1) Evaluate whether the proposed collection of information is necessary for the proper performance of the functions of the agency/component, including hether the information will have practical utility;

(2) Evaluate the accuracy of the agencies/components estimate of the burden of The proposed collection of information, including the validity of the methodology and assumptions used;

(3) Enhance the quality, utility, and clarity of the information to be collected; and

(4) Minimize the burden of the collections of information on those who are to respond, including the use of appropriate automated, electronic, mechanical, or other technological collection techniques or other forms of information technology, e.g., permitting electronic submission of responses.

Title: North American Free Trade Agreement Duty Deferral.

OMB Number: 1651–0071.

Form Number: None.

Abstract: The North American Free Trade Agreement Duty Deferral Program prescribe the documentary and other requirements that must be followed when merchandise is withdrawn from a U.S. duty-deferral program for exportation to another NAFTA country.

Current Actions: There are no changes to the information collection. This submission is being submitted to extend the expiration date.

Type of Review: Extension (without change).

Affected Public: Businesses, Individuals, Institutions.

Estimated Number of Respondents: 50.

Estimated Number of Responses: 1,400.

Estimated Time Per Response: 12 minutes.

Estimated Total Annual Burden Hours: 280.

FOR FURTHER INFORMATION CONTACT: Tracey Denning, U.S. Customs and Border Protection, 1300 Pennsylvania Avenue, NW., Room 3.2.C, Washington, DC 20229, at 202–344–1429.

Dated: March 18, 2008.

Tracey Denning,

Agency Clearance Officer, Information Services Branch.

[FR Doc. E8–6088 Filed 3–24–08; 8:45 am]

BILLING CODE 9111–14–P

DEPARTMENT OF THE INTERIOR

Fish and Wildlife Service

[FWS–R5–R–2008–N0018; 50133–1265–PKRP–S3]

Wapack National Wildlife Refuge, Hillsborough County, NH

AGENCY: Fish and Wildlife Service, Interior.

ACTION: Notice of availability: draft comprehensive conservation plan and environmental assessment; request for comments.

SUMMARY: We, the U.S. Fish and Wildlife Service (Service), announce the availability of a Draft Comprehensive Conservation Plan (CCP) and Environmental Assessment (EA) for Wapack National Wildlife Refuge (NWR), and request public review and comment on its proposals. We prepared the Draft CCP/EA in compliance with the National Environmental Policy Act of 1969 and the National Wildlife Refuge System Administration Act of 1966, as amended by the National Wildlife Refuge System Improvement Act of 1997.

DATES: The Draft CCP/EA will be available for public review and comment until the close of business on May 1, 2008. To ensure consideration, we must receive your comments by that date. We must also receive any requests for hard-copy documents for review no later than April 15, 2008. We plan to host one public meeting on April 17, 2008 at the Shieling Forest visitor building, One Old Street Road, in Peterborough, New Hampshire. We will post additional details of that meeting approximately 2 weeks in advance on the Web site *http://www.fws.gov/northeast/planning/Wapack/ccphome.html,* via our project mailing list, and in local papers.

ADDRESSES: You may obtain copies of the draft CCP/EA on compact diskette or in print by writing to Nancy McGarigal, Refuge Planner, U.S. Fish and Wildlife Service, 300 Westgate Center Drive, Hadley, Massachusetts 01035, or by electronic mail at *northeastplanning@fws.gov;* please put the words ''Wapack Refuge'' in your subject line. You may also view the draft document on the Web at *http://library.fws.gov/CCPs/wapack/index.html.*

FOR FURTHER INFORMATION CONTACT: Nancy McGarigal, Refuge Planner, at the address above, by telephone at 413–253–8562, by fax at 413–253–8468, or by electronic mail at *northeastplanning@fws.gov.* Please use the words ''Wapack Refuge'' in your subject line.

SUPPLEMENTARY INFORMATION: The National Wildlife Refuge System Administration Act of 1966, as amended by the National Wildlife Refuge System Improvement Act of 1997 (16 U.S.C. 668dd–668ee), requires the Service to develop a CCP for each refuge. The purpose of developing a CCP is to provide refuge managers with a 15-year

plan for achieving refuge purposes and contributing to the mission of the National Wildlife Refuge System (NWRS), in conformance with the sound principles of fish and wildlife science, natural resources conservation, legal mandates, and Service policies. In addition to outlining broad management direction on conserving wildlife and habitats, CCPs identify wildlife-dependent recreational opportunities available to the public, including wildlife observation, photography, environmental education, and interpretation. The Service will review and update each CCP at least once every 15 years, in accordance with the National Wildlife Refuge System Improvement Act of 1997 and the National Environmental Policy Act of 1969.

The 1,625-acre Wapack NWR, established by donation in 1972, was the first national wildlife refuge in New Hampshire. Its purpose is for use as an inviolate sanctuary or for any other management purpose for migratory birds. Because it is un-staffed, the Great Bay NWR staff, headquartered in Newington, New Hampshire, administers it. The refuge is located about 20 miles west of Nashua, New Hampshire, and encompasses the 2,278-foot elevation North Pack Monadnock Mountain in the towns of Greenfield and Temple, New Hampshire. The terms of the deed require the Service to manage the refuge in a ''wilderness-like'' setting for wildlife. Specific deed restrictions prohibit using motorized vehicles, hunting and fishing, trapping, or cutting trees.

Generally, mature northern hardwood-mixed and spruce-fir forest characterizes the refuge. It provides nesting habitat for numerous migratory songbirds, such as the black-capped chickadee, blackburnian warbler, black-throated blue warbler, hermit thrush, myrtle warbler, ovenbird, and red-eyed vireo. The refuge also supports a wide variety of other native wildlife, including deer, bear, coyote, fisher, fox, mink and weasel.

Visitors often engage in wildlife observation and photography on the refuge. It is especially popular for viewing the fall migration of hawks. A 4-mile segment of the 21-mile Wapack Trail traverses it, and rewards hikers with a beautiful view of the surrounding mountains. Two other trails cross the refuge to offer a 6-mile circuit hike.

The Draft CCP/EA evaluates two alternatives, which address eleven key issues identified by the public, State or Federal agencies, other Service programs, and our planning team. The draft CCP/EA describes those issues in detail. Highlights follow.

Alternative A (Current Management): This alternative is the ''No Action'' alternative required by the National Environmental Policy Act of 1969 (42 U.S.C. 4321–4347, as amended). Alternative A defines our current management activities, and serves as the baseline against which to compare the other alternative. The Service would continue to manage the refuge in a ''wilderness-like'' setting, without actively managing its habitat, thereby allowing natural succession to continue without human interference. The Service would continue to allow only compatible uses that are consistent with a ''wilderness-like'' setting and adhere to other deed restrictions. We would not allow hunting, fishing, trapping, driving motor vehicles, or cutting trees (except for maintaining trails). In addition, we would continue to prohibit camping, mountain biking, horseback riding and dog walking. This alternative would not improve access to the refuge or the visibility of the Service in the area. We would continue our informal relationships with the Friends of the Wapack and the Mountain View Hiking Club to maintain refuge trails. We would also continue to work under a memorandum of agreement with the New Hampshire Fish and Game Department to resolve inter-jurisdictional issues on the refuge as they arise.

Alternative B (the Service-preferred alternative): Alternative B is the alternative we propose as the best means to manage this refuge over the next 15 years. It includes an array of management actions that, in our professional judgment, work best toward achieving the purpose of the refuge, our vision and goals for it and State and regional conservation plans. In our opinion, this alternative would most effectively address the key issues.

We propose to focus on improving our baseline biological database and enhancing visitor services programs by expanding our partnerships with other federal agencies, state agencies, town departments, local conservation organizations, and individuals. One such project is to gather baseline data on the populations of plants and wildlife on the refuge in partnership with the U.S. Forest Service. We would also use partnerships to maintain trails, develop and maintain a new trailhead parking area, and assess and monitor threats to the integrity of refuge habitat. We would also increase our presence on the refuge and its visibility in the local community, and better communicate refuge regulations, visitor information, and contact information.

Under alternative B, we would manage public uses similar to alternative A by allowing only compatible activities that are consistent with a ''wilderness-like'' setting and adhere to other deed restrictions. The only differences are that we would allow dog walking on leash and recreational berry-picking.

This alternative does not propose to expand the refuge. However, we would offer our support to partners engaged in other land conservation and protection in the area, work with them to identify lands of high wildlife value in need of protection, and provide them with technical assistance in managing them.

After we evaluate and respond to the public comments on this Draft CCP/EA, we will prepare a final CCP for our Regional Director's approval. He will determine whether a Finding of No Significant Impact (FONSI) is appropriate, and certify whether the final CCP meets agency compliance requirements, achieves refuge purposes, and helps fulfill the mission of the NWRS. With an affirmative FONSI and other positive findings, the Regional Director can approve the final CCP. If he issues a FONSI and approves that final CCP, we will announce its availability in the **Federal Register** and begin its implementation.

Dated: January 18, 2008.

Wendi Weber,

Acting Regional Director, Region 5, U.S. Fish and Wildlife Service, Hadley, Massachusetts.

[FR Doc. E8–6043 Filed 3–24–08; 8:45 am]

BILLING CODE 4310–55–P

DEPARTMENT OF THE INTERIOR

Bureau of Indian Affairs

Land Acquisitions; Puyallup Tribe, Washington

AGENCY: Bureau of Indian Affairs, Interior.

ACTION: Notice of Final Agency Determination to Take Land into Trust under 25 CFR Part 151.

SUMMARY: The Assistant Secretary—Indian Affairs made a final agency determination to acquire approximately 10.2 acres of land into trust for the Puyallup Tribe of Washington on March 14, 2008. This notice is published in the exercise of authority delegated by the Secretary of the Interior to the Assistant Secretary—Indian Affairs by 209 Departmental Manual 8.1.

FOR FURTHER INFORMATION CONTACT: George Skibine, Director, Office of

Indian Gaming, MS–3657 MIB, 1849 C Street, NW., Washington, DC 20240; Telephone (202) 219–4066.

SUPPLEMENTARY INFORMATION: This notice is published to comply with the requirement of 25 CFR 151.12(b) that notice be given to the public of the Secretary's decision to acquire land in trust at least 30 days prior to signatory acceptance of the land into trust. The purpose of the 30-day waiting period in 25 CFR 151.12(b) is to afford interested parties the opportunity to seek judicial review of final administrative decisions to take land in trust for Indian tribes and individual Indians before transfer of title to the property occurs. On March 14, 2008, the Assistant Secretary—Indian Affairs decided to accept approximately 10.2 acres of land into trust for the Puyallup Tribe of Washington. Pursuant to the Act of May 18, 2006, Public Law 109–224 (120 Stat. 376) Congress directed that the Secretary of the Interior accept the conveyance of certain specifically described tracts of land and hold that land in trust for the Puyallup Tribe. This tract of land is specifically identified in the Section 1(b) (1) and (2) of the statute. The statute specifically mandates that the Secretary ''shall'' accept the conveyance and hold the land in trust. The 10.2 acre parcel is located in the City of Fife, Pierce County, Washington.

The legal description of the property is as follows:

PARCEL A (0420076005)

Lots A, Boundary Line Adjustment recorded under recording number 9508150496, according to the map thereof recorded August 15, 1995, records of Pierce County Auditor.

EXCEPT that portion thereof lying North of a line that is 63.00 feet South of the Centerline of SR99 (Old State No. 1) as conveyed by instrument recorded under recording number 689874, records of Pierce County.

PARCEL B (0420076006)

Lot B, Boundary line adjustment 9508150496, according to the map thereof Recorded August 15, 1995, records of Pierce County Auditor.

EXCEPT that portion thereof lying North of a line that is 63.00 feet South of the centerline of SR99 (Old State Road No. 1) as conveyed by instrument recorded under recording number 689874, records of Pierce County.

Situate in the City of Fife, County of Pierce, State of Washington.

PARCEL C (0420076008)

Lot 4, Pierce County Short Plat No. 8908020412, according to the map thereof recorded August 2, 1995, records of Pierce County Auditor.

Together with portion of SR–5 abutting Lot 4, conveyed by deed recorded under recording no. 9309070433 described as follows:

That portion of Government Lot 1, Section 07, Township 20 North, Range 4 East of the Willamette Meridian, described as follows:

Commencing at Highway Engineer's Station (hereinafter referred to as HES) AL26 6+38.0 P.O.T. on the AL26 line survey of SR 5, Tacoma to King County line; THENCE South 88°54′30″ East along the North line of said Lot 1, a distance of 95 feet to the TRUE POINT OF BEGINNING; THENCE South 01°05′30″ West 87.4 feet; THENCE Westerly to a point opposite HES AL26 5+50.6 P.O.T. on said AL26 line survey and 75 feet Easterly therefrom; THENCE Northwesterly to a point opposite AL26 5+80.6 on said AL 26 line survey and 55 feet Easterly therefrom; THENCE Northerly parallel with said survey to the North line of said lot 1; THENCE North 88°54′30″ East to the TRUE POINT OF BEGINNING.

EXCEPT that portion of Lot 4 of said short plat No. 8908020412, conveyed to the State of Washington by deed recorded under Recording No. 9308100165 and more particularly described as follows:

Commencing at the Northeast corner of said Lot 4; THENCE North 89°53′30″ West along the North line of said Lot 4 a distance of 147.44 feet to the TRUE POINT OF BEGINNING and a point of curvature; THENCE Southwesterly along a curve to the left, the center of which bears South 00°06′30″ West, 55.00 feet distant, through a central angle of 89°01′00″ , an arc distance of 85.45 feet; THENCE South 01°05′30″ West, 59.43 Feet; THENCE North 88°54′30″ West, 20.00 feet to a point on the Westerly line of said Lot 4; THENCE North 00°57′10″ East along said Westerly line 113.15 feet to the Northwest corner of said Lot 4; THENCE South 89°53′30″ East along said North line, a distance of 74.34 feet to the TRUE POINT OF BEGINNING.

And EXCEPT that portion thereof lying North of a line that is 63.00 feet South of and parallel with the centerline of SR99 (Old State Road No. 1) as conveyed by instrument recorded under recording number 689874, records of Pierce County, Washington.

PARCEL D (0420076007)

Lot 3, Pierce County Short Plat No. 8908020412, according to the map thereof recorded August 2, 1989, Records of Pierce County Auditor.

EXCEPT that portion thereof lying North of a line that is 63.00 feet South of the centerline of SR99 (Old State Road No. 1) as conveyed by instrument recorded under recording number 689874, records of Pierce County.

Situate in the City of Fife, County of Pierce, State of Washington.

Containing 10.2 acres, more or less.

Dated: March 14, 2008.

Carl J. Artman,

Assistant Secretary—Indian Affairs.

[FR Doc. E8–5923 Filed 3–24–08; 8:45 am]

BILLING CODE 4310–4N–P

DEPARTMENT OF THE INTERIOR

Bureau of Land Management

[WY–957–08–1420–BJ]

Notice of Filing of Plats of Survey, Wyoming

AGENCY: Bureau of Land Management, Interior.

SUMMARY: The Bureau of Land Management (BLM) has filed the plats of survey of the lands described below in the BLM Wyoming State Office, Cheyenne, Wyoming, on the dates indicated.

FOR FURTHER INFORMATION CONTACT: Bureau of Land Management, 5353 Yellowstone Road, P.O. Box 1828, Cheyenne, Wyoming 82003.

SUPPLEMENTARY INFORMATION: These surveys were executed at the request of the Bureau of Land Management, and are necessary for the management of resources. The lands surveyed are:

The supplemental plat showing new lottings in sections 8, 17 and 18, Township 18 North, Range 79 West, Sixth Principal Meridian, Wyoming, was accepted December 6, 2007.

The plat and field notes representing the dependent resurvey of portions of the subdivisional lines, 1909 meanders of the Green River and an island located in sections 14 and 15, and the subdivision of certain sections, and the metes-and-bounds survey of Lot 13 in section 14, Township 23 North, Range 111 West, of the Sixth Principal Meridian, Wyoming, Group No. 723, was accepted December 6, 2007.

The plat and field notes representing the dependent resurvey of a portion of the east boundary, the west and north boundaries and the subdivisional lines, Township 50 North, Range 78 West, of the Sixth Principal Meridian, Wyoming, Group No. 727, was accepted December 6, 2007.

The plat and field notes representing the dependent resurvey of a portion of the subdivisional lines, and the subdivision of section 21, and the metes and bounds survey of Lot 1, section 21, Township 18 North, Range 80 West,

Sixth Principal Meridian, Wyoming, Group No. 779, was accepted December 6, 2007.

The plat representing the entire record of the establishment of reference monuments for the meander corner of sections 33 and 34, on the left bank of the Gros Ventre River, Township 42 North, Range 116 West, Sixth Principal Meridian, Wyoming, Group No. 607, was accepted January 30, 2008.

The plat representing the entire record of the establishment of reference monuments for certain corners of Parcel A, Section 28, Township 26 North, Range 105 West, Sixth Principal Meridian, Wyoming, Group No. 674, was accepted January 30, 2008.

The plat representing the entire record of the dependent resurvey of a portion of the subdivisional lines designed to restore the corners in their true original locations according to the best available evidence, Township 20 North, Range 85 West, Sixth Principal Meridian, Wyoming, Group No. 766, was accepted January 30, 2008.

The plat and field notes representing the corrective dependent resurvey of a portion of the subdivisional lines, and the dependent resurvey of a portion of the Twelfth Standard Parallel North (north boundary), through Range 80 West, a portion of the south boundary and a portion of the subdivisional lines, Township 48 North, Range 80 West, Sixth Principal Meridian, Wyoming, Group No. 762, was accepted February 26, 2008.

The plat and field notes representing the dependent resurvey of a portion of the north boundary, and the subdivisional lines, Township 21 North, Range 94 West, Sixth Principal Meridian, Wyoming, Group No. 763, was accepted February 26, 2008.

The plat representing the entire record of the corrective dependent resurvey of a portion of the Ninth Guide Meridian West, Township 51 North, between Ranges 72 and 73 West, Sixth Principal Meridian, Wyoming, designed to restore the corners to their original locations according to the best available evidence, Group No. 765, was accepted March 17, 2008.

Copies of the preceding described plats and field notes are available to the public at a cost of $1.10 per page.

Dated: March 18, 2008.

John P. Lee,

Chief Cadastral Surveyor, Division of Support Services.

[FR Doc. E8–6035 Filed 3–24–08; 8:45 am]

BILLING CODE 4310–22–P

DEPARTMENT OF THE INTERIOR

Bureau of Land Management

[CA–310–0777-XX]

Notice of Public Meeting: Northeast California Resource Advisory Council

AGENCY: Bureau of Land Management, Interior.

ACTION: Notice of public meeting.

SUMMARY: In accordance with the Federal Land Policy and Management Act of 1976 (FLPMA), and the Federal Advisory Committee Act of 1972 (FACA), the U.S. Department of the Interior, Bureau of Land Management (BLM) Northeast California Resource Advisory Council will meet as indicated below.

DATES: The meeting will be held Thursday and Friday, May 15 and 16, 2008, in the Conference Room of the BLM Alturas Field Office, 708 W. 12th St., Alturas, California. On May 15, the members convene at the Alturas Field Office at 10 a.m. and depart immediately for a field tour. Members of the public are welcome. They must provide their own transportation in a high clearance four-wheel-drive vehicle and their own lunch. On May 16, the meeting runs from 8 a.m. to 3 p.m. Time for public comment is reserved at 11 a.m.

FOR FURTHER INFORMATION CONTACT: Tim Burke, BLM Alturas Field Office manager, (530) 233–4666; or BLM Public Affairs Officer Joseph J. Fontana, (530) 252–5332.

SUPPLEMENTARY INFORMATION: The 15-member council advises the Secretary of the Interior, through the BLM, on a variety of planning and management issues associated with public land management in Northeast California and the northwest corner of Nevada. At this meeting, agenda topics will include a status report on proposals for wind energy development and updates on the sage steppe restoration management plan, sage-grouse conservation, wild horse and burro management, and the Modoc Resource Academy. Members also will hear status reports from the Alturas, Eagle Land and Surprise field offices. All meetings are open to the public. Members of the public may present written comments to the council. Each formal council meeting will have time allocated for public comments. Depending on the number of persons wishing to speak, and the time available, the time for individual comments may be limited. Members of the public are welcome on field tours, but they must provide their own transportation and lunch. Individuals who plan to attend and need special assistance, such as sign language interpretation and other reasonable accommodations, should contact the BLM as provided above.

Dated: March 17, 2008.

Joseph J. Fontana,

Public Affairs Officer.

[FR Doc. E8–5973 Filed 3–24–08; 8:45 am]

BILLING CODE 4310–40–P

DEPARTMENT OF THE INTERIOR

Bureau of Land Management

[AK–963–1410–FQ; F–14223]

Public Land Order No. 7692; Partial Revocation of Public Land Order No. 5150, as Amended; Alaska

AGENCY: Bureau of Land Management, Interior.

ACTION: Public Land Order.

SUMMARY: This order partially revokes a Public Land Order as it affects approximately 82,608 acres of public lands withdrawn and reserved as a utility and transportation corridor within Alaska. This order also makes the lands available for selection and conveyance to the State of Alaska.

EFFECTIVE DATE: March 25, 2008.

FOR FURTHER INFORMATION CONTACT: Renee Fencl, Bureau of Land Management, Alaska State Office, 222 West Seventh Avenue, # 13, Anchorage, Alaska 99513–7599; 907–271–5067.

SUPPLEMENTARY INFORMATION: The withdrawal was reviewed through the land use planning process for the Bureau of Land Management East Alaska Resource Management Plan. It was determined to retain the lands withdrawn by Public Land Order No. 5150, as amended, under Federal management except for the lands described in Paragraph 1 areas located near Paxson, Alaska. Upon revocation, the State of Alaska applications for selection made under the Alaska Statehood Act and the Alaska National Interest Lands Conservation Act become effective without further action by the State, if such lands are otherwise available. Otherwise, the lands in this order will continue to be subject to the terms and conditions of Public Land Order No. 5180, as amended, and any other withdrawal, applications, or segregation of record.

Order

By virtue of the authority vested in the Secretary of the Interior by section 22(h)(4) of the Alaska Native Claims

Settlement Act, 43 U.S.C. 1631(h)(4) and section 204 of the Federal Land Policy and Management Act of 1976, 43 U.S.C. 1714 (2000), it is ordered as follows:

1. Public Land Order No. 5150, as amended, which withdrew lands and reserved them for utility and transportation corridor purposes, is hereby revoked insofar as it affects the following described unsurveyed lands:

Fairbanks Meridian
T. 17 S., R. 9 E.,
Secs. 25 to 36, inclusive.
T. 18 S., R. 9 E.,
Secs. 1 to 36, inclusive.
T. 17 S., R. 10 E.,
Secs. 29 to 34, inclusive.
T. 18 S., R. 10 E.,
Secs. 3 to 10, inclusive;
Secs. 15 to 22, inclusive;
Secs. 27 to 34, inclusive.
T. 19 S., R. 10 E.,
Secs. 4 to 9, inclusive;
Secs. 17 to 20, inclusive;
Secs. 28 to 33, inclusive.
T. 20 S., R. 12 E.,
Secs. 1 to 3, inclusive;
Secs. 10 to 15, inclusive;
Secs. 22 to 27, inclusive;
Secs. 34 to 36, inclusive.
T. 21 S., R. 12 E.,
Secs. 1 to 3, inclusive;
Secs. 10 to 15, inclusive;
Secs. 22 to 27, inclusive;
Secs. 34 to 36, inclusive.

The areas described aggregate approximately 82,608 acres.

2. The State of Alaska applications for selection made under section 6(b) of the Alaska Statehood Act of July 7, 1958, 48 U.S.C. note prec. 21 (2000), and under section 906(e) of the Alaska National Interest Lands Conservation Act, 43 U.S.C. 1635(e) (2000), become effective without further action by the State upon publication of this Public Land Order in the **Federal Register**, if such lands are otherwise available. Lands selected by, but not conveyed to, the State will continue to be subject to Public Land Order No. 5180, as amended, and any other withdrawal or segregation of record.

Dated: March 13, 2008.

C. Stephen Allred,

Assistant Secretary—Land and Minerals Management.

[FR Doc. E8–5988 Filed 3–24–08; 8:45 am]

BILLING CODE 4310–JA–P

DEPARTMENT OF THE INTERIOR

Bureau of Land Management

[ES–960–1430–ET; MNES–017121]

Public Land Order No. 7693; Revocation of the Withdrawal Established by Executive Order Dated February 4, 1909; Minnesota

AGENCY: Bureau of Land Management, Interior.

ACTION: Public Land Order.

SUMMARY: This order revokes in its entirety the withdrawal established by an Executive Order as to 204.09 acres of public land withdrawn from surface entry and reserved for use by the United States Coast Guard for lighthouse purposes. No lighthouse was ever constructed and the United States Coast Guard has determined the reservation is no longer needed.

DATES: *Effective Date:* March 25, 2008.

FOR FURTHER INFORMATION CONTACT: Ida Doup, Bureau of Land Management-Eastern States, 7450 Boston Boulevard, Springfield, Virginia 22153, 703–440–1541.

SUPPLEMENTARY INFORMATION: This is a record-clearing action only as 194.91 acres have been conveyed out of Federal ownership and the remaining 9.18 acres remain withdrawn subject to the Shipstead-Newton-Nolan Act of July 10, 1930.

Order

By virtue of the authority vested in the Secretary of the Interior, by section 204 of the Federal Land Policy and Management Act of 1976, 43 U.S.C. 1714 (2000), it is ordered as follows:

The withdrawal established by Executive Order No. 1020 dated February 4, 1909, and any other order which reserved for lighthouse purposes the land, or any part thereof that is described below, is hereby revoked in its entirety:

4th Principal Meridian

T. 64 N., R. 7 E.,
Fractional sec 25, lots 1 and 2;
Fractional sec 26, lots 1 to 4, inclusive.

The area described contains 204.09 acres in Cook County.

Dated: March 14, 2008.

C. Stephen Allred,

Assistant Secretary—Land and Minerals Management.

[FR Doc. E8–5995 Filed 3–24–08; 8:45 am]

BILLING CODE 4310–GJ–P

DEPARTMENT OF THE INTERIOR

Bureau of Land Management

[MT–060–1430–ET; MTM 68761]

Public Land Order No. 7695; Extension of Public Land Order No. 6674; Montana

AGENCY: Bureau of Land Management, Interior.

ACTION: Public Land Order.

SUMMARY: This order extends the withdrawal created by Public Land Order No. 6674 for an additional 20-year period. This extension is necessary to continue protection of the Bureau of Land Management's Blacktail Creek Paleontological Site in Fergus County, Montana, which would otherwise expire on April 26, 2008.

EFFECTIVE DATE: April 27, 2008.

FOR FURTHER INFORMATION CONTACT: Russ Sorensen, BLM, Lewistown Field Office, P.O. Box 1160, Lewistown, Montana 59457, (406) 538–1910, or Sandra Ward, BLM, Montana State Office, 5001 Southgate Drive, Billings, Montana 59101–4669, (406) 896–5052.

SUPPLEMENTARY INFORMATION: The withdrawal extended by this order will expire April 26, 2028, unless, as a result of a review conducted prior to the expiration date pursuant to section 204(f) of the Federal Land Policy and Management Act of 1976, 43 U.S.C. 1714(f) (2000), the Secretary determines that the withdrawal shall be further extended.

Order

By virtue of the authority vested in the Secretary of the Interior by section 204 of the Federal Land Policy and Management Act of 1976, 43 U.S.C. 1714 (2000), it is ordered as follows:

Public Land Order No. 6674 (53 FR 15041 (1988)), which withdrew 320 acres of public lands from settlement, sale, location, or entry under the general land laws, including the United States mining laws to protect the Blacktail Creek Paleontological Site, is hereby extended for an additional 20-year period until April 26, 2028.

Authority: 43 CFR 2310.4

Dated: March 13, 2008.

C. Stephen Allred,

Assistant Secretary—Land and Minerals Management.

[FR Doc. E8–6010 Filed 3–24–08; 8:45 am]

BILLING CODE 4310–$$–P

DEPARTMENT OF THE INTERIOR

Bureau of Land Management

[MTM 21943]

Public Land Order No. 7696; Extension of Public Land Order No. 6669; Montana

AGENCY: Bureau of Land Management, Interior.

ACTION: Public Land Order.

SUMMARY: This order extends the withdrawal created by Public Land Order No. 6669 for an additional 20-year period. This extension is necessary to continue protection of the United States Forest Service's Lincoln Gulch Historic Site in Lewis and Clark County, Montana which would otherwise expire on March 23, 2008.

DATES: *Effective Date:* March 24, 2008.

FOR FURTHER INFORMATION CONTACT: Scott Bixler, U.S. Forest Service, Region 1, P.O. Box 7669, Missoula, Montana 59807, 406–329–3655, or Sandra Ward, Bureau of Land Management, Montana State Office, 5001 Southgate Drive, Billings, Montana 59101–4669, (406) 896–5052.

SUPPLEMENTARY INFORMATION: The withdrawal extended by this order will expire on March 23, 2028, unless, as a result of a review conducted prior to the expiration date pursuant to section 204(f) of the Federal Land Policy and Management Act of 1976, 43 U.S.C. 1714(f) (2000), the Secretary determines that the withdrawal shall be further extended.

Order

By virtue of the authority vested in the Secretary of the Interior by section 204 of the Federal Land Policy and Management Act of 1976, 43 U.S.C. 1714 (2006), it is ordered as follows:

Public Land Order No. 6669 (53 FR 9628 (1988)), which withdrew 90 acres of National Forest System land from the United States mining laws to protect the Lincoln Gulch Historic Site, is hereby extended for an additional 20-year period until March 23, 2028.

Authority: 43 CFR 2310.4.

Dated: March 13, 2008.

C. Stephen Allred,

Assistant Secretary—Land and Minerals Management.

[FR Doc. E8–6013 Filed 3–24–08; 8:45 am]

BILLING CODE 4310–11–P

DEPARTMENT OF THE INTERIOR

Bureau of Land Management

[ES–960–1430–ET; WIES–016527]

Public Land Order No. 7694; Revocation of Executive Order Dated April 7, 1868; Wisconsin

AGENCY: Bureau of Land Management, Interior.

ACTION: Public Land Order.

SUMMARY: This order revokes in its entirety the withdrawal established by an Executive Order as to 9.06 acres of public land withdrawn from surface entry and reserved for use by the United States Coast Guard for lighthouse purposes. The reservation is no longer needed by the United States Coast Guard.

EFFECTIVE DATE: March 25, 2008.

FOR FURTHER INFORMATION CONTACT: Ida Doup, Bureau of Land Management-Eastern States, 7450 Boston Boulevard, Springfield, Virginia 22153, 703–440–1541.

SUPPLEMENTARY INFORMATION: This revocation is a record-clearing action only, since the 9.06 acres have been conveyed out of Federal ownership.

Order

By virtue of the authority vested in the Secretary of the Interior, by section 204 of the Federal Land Policy and Management Act of 1976, 43 U.S.C. 1714 (2000), it is ordered as follows:

The withdrawal established by Executive Order dated April 7, 1868, which reserved the following described public land for lighthouse purposes, is hereby revoked in its entirety:

Fourth Principal Meridian
T. 30 N., R. 28 E.,
Tract No. 37.
The area described contains 9.06 acres in Door County.

Dated: March 14, 2008.

C. Stephen Allred,

Assistant Secretary—Land and Minerals Management.

[FR Doc. E8–5997 Filed 3–24–08; 8:45 am]

BILLING CODE 4310–GJ–P

DEPARTMENT OF THE INTERIOR

Minerals Management Service

Gulf of Mexico, Outer Continental Shelf, Central Planning Area, Oil and Gas Lease Sale 207 (2008) Environmental Assessment

AGENCY: Minerals Management Service, Interior.

ACTION: Notice of availability of an environmental assessment.

SUMMARY: The Minerals Management Service (MMS) is issuing this notice to advise the public, pursuant to the National Environmental Policy Act of 1969 (NEPA), as amended, 42 U.S.C. 4321 *et seq.*, that MMS has prepared an environmental assessment (EA) for proposed Outer Continental Shelf (OCS) oil and gas Lease Sale 207 in the Western Gulf of Mexico (GOM) Planning Area (WPA) (Lease Sale 207) scheduled for August 2008. The preparation of this EA is an important step in the decision process for Lease Sale 207. The proposal for Lease Sale 207 was identified by the Call for Information and Nominations published in the **Federal Register** on December 3, 2007, and was analyzed in the *Gulf of Mexico OCS Oil and Gas Lease Sales: 2007–2012; Western Planning Area Sales 204, 207, 210, 215, and 218; Central Planning Area Sales 205, 206, 208, 213, 216, and 222—Final Environmental Impact Statement; Volumes I and II* (Multisale EIS, OCS EIS/EA MMS 2007–018). The proposal includes approximately 28.6 million acres offshore Texas and western Louisiana in water up to 10,978 ft (3,346 m) deep. This EA for proposed Lease Sale 207 reexamined the potential environmental effects of offering for lease all unleased blocks in the WPA (excluding unleased whole and partial blocks that are part of Flower Garden Banks National Marine Sanctuary, and whole and partial blocks that lie within the 1.4-nautical mile buffer zone north of the outer continental shelf boundary between the U.S. and Mexico). Alternatives excluded additional blocks in biologically sensitive areas of the western GOM, use of a nomination and tract selection leasing system, and no action. The EA determined that no new information about environmental resources or potential impacts were identified that were not considered in the Multisale EIS. MMS determined that a Supplemental EIS is not required and prepared a Finding of No New Significant Impact (FONNSI).

FOR FURTHER INFORMATION CONTACT: Mr. Dennis Chew, Minerals Management Service, Gulf of Mexico OCS Region, 1201 Elmwood Park Boulevard, MS 5410, New Orleans, Louisiana 70123–2394. You may also contact Mr. Chew by telephone at (504) 736–2793.

SUPPLEMENTARY INFORMATION: In April 2007, MMS published a Multisale EIS that addressed 11 proposed Federal actions that would offer for lease areas on the GOM OCS that may contain economically recoverable oil and gas

resources. Federal regulations allow for several related or similar proposals to be analyzed in one EIS (40 CFR 1502.4). Since each proposed lease sale and its projected activities are very similar each year for each planning area, a single EIS was prepared for the 11 WPA and Central Planning Area (CPA) lease sales scheduled in the proposed *OCS Oil and Gas Leasing Program: 2007–2012* (5-Year Program). The Multisale EIS addressed WPA Lease Sale 204 in 2007, Sale 207 in 2008, Sale 210 in 2009, Sale 215 in 2010, and Sale 218 in 2011; and CPA Lease Sale 205 in 2007, Sale 206 in 2008, Sale 208 in 2009, Sale 213 in 2010, Sale 216 in 2011, and Sale 222 in 2012. Although the Multisale EIS addresses 11 proposed lease sales, at the completion of the EIS process, Records of Decision were published in July and August 2007 for only proposed WPA Lease Sale 204 and proposed CPA Lease Sale 205, respectively. An additional NEPA review (an EA) was conducted for proposed Lease Sale 207 to address any new information relevant to the proposed lease sale. Additional NEPA reviews will also be conducted prior to decisions on each of the remaining proposed lease sales. The purpose of an EA for a lease sale is to determine whether to prepare a FONNSI or a Supplemental EIS. For each proposed lease sale, MMS prepares a Consistency Determination (CD) to determine whether the lease sale is consistent with each affected State's federally-approved coastal zone management program. Finally, MMS solicits comments via the Proposed Notice of Sale (PNOS) from the governors of the affected States on the size, timing, and location of the lease sale. The tentative schedule for the prelease decision process for Lease Sale 207 is as follows: CDs sent to affected States, March 2008; PNOS sent to governors of the affected States, March 2008; Final Notice of Sale published in the **Federal Register**, July 2008; and Lease Sale 207, August 2008.

Public Comments: Within 30 days of this Notice's publication, interested parties are requested to send comments on this EA/FONNSI. Comments may be submitted in one of the following two ways:

1. In written form enclosed in an envelope labeled ''Comments on WPA Lease Sale 207 EA'' and mailed (or hand carried) to the Regional Supervisor, Leasing and Environment (MS 5410), Minerals Management Service, Gulf of Mexico OCS Region, 1201 Elmwood Park Boulevard, New Orleans, Louisiana 70123–2394.

2. Electronically to the MMS e-mail address: *environment@mms.gov.*

All comments received will be considered in the decisionmaking process for proposed Lease Sale 207.

EA Availablity: To obtain a copy of this EA for Lease Sale 207, you may contact the Minerals Management Service, Gulf of Mexico OCS Region, Attention: Public Information Office (MS 5034), 1201 Elmwood Park Boulevard, Room 114, New Orleans, Louisiana 70123–2394 (1–800–200–GULF). You may also view this EA on the MMS Web site at *http://www.gomr.mms.gov/homepg/regulate/environ/nepa/nepaprocess.html.*

Dated: February 29, 2008.

Chris C. Oynes,

Associate Director for Offshore Minerals Management.

[FR Doc. E8–6008 Filed 3–24–08; 8:45 am]

BILLING CODE 4310–MR–P

DEPARTMENT OF THE INTERIOR

Minerals Management Service

Notice of Availability of the Proposed Notice of Sale for the Outer Continental Shelf (OCS) Oil and Gas Lease Sale 207 in the Western Planning Area (WPA) in the Gulf of Mexico

AGENCY: Minerals Management Service, Interior.

ACTION: Notice of Availability of the Proposed Notice of Sale for Proposed Sale 207.

SUMMARY: The MMS announces the availability of the proposed Notice of Sale for proposed Sale 207 in the WPA. This Notice is published pursuant to 30 CFR 256.29(c) as a matter of information to the public. With regard to oil and gas leasing on the OCS, the Secretary of the Interior, pursuant to section 19 of the OCS Lands Act, provides the affected states the opportunity to review the proposed Notice. The proposed Notice sets forth the proposed terms and conditions of the sale, including minimum bids, royalty rates, and rentals.

DATES: Comments on the size, timing, or location of proposed Sale 207 are due from the affected states within 60 days following their receipt of the proposed Notice. The final Notice of Sale will be published in the **Federal Register** at least 30 days prior to the date of bid opening. Bid opening is currently scheduled for August 20, 2008.

SUPPLEMENTARY INFORMATION: The proposed Notice of Sale for Sale 207 and a ''Proposed Sale Notice Package'' containing information essential to potential bidders may be obtained from the Public Information Unit, Gulf of Mexico Region, Minerals Management Service, 1201 Elmwood Park Boulevard, New Orleans, Louisiana 70123–2394. Telephone: (504) 736–2519.

Dated: March 18, 2008.

Randall B. Luthi,

Director, Minerals Management Service.

[FR Doc. E8–6012 Filed 3–24–08; 8:45 am]

BILLING CODE 4310–MR–P

INTERNATIONAL TRADE COMMISSION

[Inv. No. 337–TA–640]

In the Matter of: Certain Short-Wavelength Light Emitting Diodes, Laser Diodes and Products Containing Same; Notice of Investigation

AGENCY: U.S. International Trade Commission.

ACTION: Institution of investigation pursuant to 19 U.S.C. 1337.

SUMMARY: Notice is hereby given that a complaint was filed with the U.S. International Trade Commission on February 20, 2008, under section 337 of the Tariff Act of 1930, as amended, 19 U.S.C. 1337, on behalf of Gertrude Neumark Rothschild of Hartsdale, New York. Letters supplementing the complaint were filed on March 11 (two letters), 12, and 14, 2008. The complaint alleges violations of section 337 based upon the importation into the United States, the sale for importation, and the sale within the United States after importation of certain short-wavelength light emitting diodes, laser diodes and products containing same that infringe certain claims of U.S. Patent No. 5,252,499. The complaint further alleges that an industry in the United States exists as required by subsection (a)(2) of section 337.

The complainant requests that the Commission institute an investigation and, after the investigation, issue exclusion orders and cease and desist orders.

ADDRESSES: The complaint, except for any confidential information contained therein, is available for inspection during official business hours (8:45 a.m. to 5:15 p.m.) in the Office of the Secretary, U.S. International Trade Commission, 500 E Street, SW., Room 112, Washington, DC 20436, telephone 202–205–2000. Hearing impaired individuals are advised that information on this matter can be obtained by contacting the Commission's TDD terminal on 202–205–1810. Persons with mobility impairments who will

need special assistance in gaining access to the Commission should contact the Office of the Secretary at 202–205–2000. General information concerning the Commission may also be obtained by accessing its internet server at: *http://www.usitc.gov.* The public record for this investigation may be viewed on the Commission's electronic docket (EDIS) at: *http://edis.usitc.gov.*

FOR FURTHER INFORMATION CONTACT: Jeffrey T. Hsu, Esq., Office of Unfair Import Investigations, U.S. International Trade Commission, telephone (202) 205–2579.

Authority: The authority for institution of this investigation is contained in section 337 of the Tariff Act of 1930, as amended, and in section 210.10 of the Commission's Rules of Practice and Procedure, 19 CFR 210.10 (2007).

Scope of Investigation: Having considered the complaint, the U.S. International Trade Commission, on March 18, 2008, *ordered that*—

(1) Pursuant to subsection (b) of section 337 of the Tariff Act of 1930, as amended, an investigation be instituted to determine whether there is a violation of subsection (a)(1)(B) of section 337 in the importation into the United States, the sale for importation, or the sale within the United States after importation of certain short-wavelength light emitting diodes, laser diodes or products containing same that infringe one or more of claims 10, 12, 13, and 16 of U.S. Patent No. 5,252,499, and whether an industry in the United States exists as required by subsection (a)(2) of section 337;

(2) For the purpose of the investigation so instituted, the following are hereby named as parties upon which this notice of investigation shall be served:

(a) The complainant is—Gertrude Neumark Rothschild, 153 Old Colony Road, Hartsdale, New York 10530–3609.

(b) The respondents are the following entities alleged to be in violation of section 337, and are the parties upon which the complaint is to be served:

Avago Technologies, No. 1 Yishun Avenue 7, Singapore 768923.
Bacol Optoelectronic Co. Ltd., 2F, No. 760, Chung Cheng Road, Chung Ho City, Taipei 235, Taiwan.
Dominant Semiconductor Sdn. Bhd., Lot 6, Batu Berendam, FTZ Phase III, 75350, Melaka, Malaysia.
Everlight Electronics Co., Ltd., 25, Lane 76, Sec. 3, Chung Yang Road, TuCheng, Taipei 236, Taiwan.
Exceed Perseverance Electronic Ind. Co., Ltd., Room 606, Unit 3, Building 14, Jiuzhou Garden, Longyuan Road, Longgang District, Shenzhen, Guangdong, China, 518116.
Guangzhou Hongli Opto-Electronic Co., Ltd., West Side of Dongfeng Highway, Auto City, Huadu District, Guangzhou, China.
Harvatek International Inc., No. 18, Lane 522, Chung Hwa Road, Sec. 5, Hsin Chu, Taiwan.
Hitachi, Ltd., 6–6, Marunouchi 1-chome, Chiyoda-ku, Tokyo 100–8280, Japan.
Kingbright Electronic Co., Ltd., 3F, No. 317–1, Chung Shan Road, Sec. 2, Chung Ho, Taipei Hsien, Taipei 235, Taiwan.
LG Electronics, LG Twin Towers 20, Yoido-dong, Youngdungpo-gu, Seoul, 150–721, Korea.
Lite-On Technology Corp., 90, Chien I Road, Chung Ho, Taipei Hsien, Taiwan.
Lucky Light Electronics Co., Ltd., Unit E & F, 15/F, Cooperative Finance Building, Shennan East Road, Louhu District, Shenzhen, China.
Matsushita Electric Industrial Co., Ltd., 1006, Kadoma, Kadoma City, Osaka 571–8501, Japan.
Motorola, Inc., 1303 East Algonquin Road, Schaumburg, Illinois 60196.
Nokia, P.O. Box 226, FI–00045 Nokia Group, Finland.
Opto Tech Corporation, No. 8, Innovation Road I, Hsinchu Science-based Industrial Park, Hsinchu, Taiwan.
Pioneer Corporation, 1–4–1 Meguro, Meguro-ku, Tokyo 153–8654, Japan.
Rohm Co., Ltd., 21, Saiin Mizosaki-cho, Ukyo-ku, Kyoto 615–8585, Japan.
Samsung Group, 250, 2–ga, Taepyung-ro, Jung-gu, Seoul, 100–742, Korea.
Sanyo Electric Co., Ltd., 5–5 Keihan-Hondori 2-Chome, Moriguchi City, Osaka 570–8677, Japan.
Seoul Semiconductor Co., Ltd., 148–29 Gasan-dong, Keumchun-gu, Seoul, Korea.
Sharp Corporation, 22–22 Nagaike-cho, Abeno-ku, Osaka 545–8522, Japan.
Shenzhen Unilight Electronic Co., Ltd., Tongfuyu Industrial Zone, Xinhe Village, Fuyong Town, Bao'an District, Shenzhen City, Guangdong Province, China.
Shinano Kenshi Co., Ltd., 1078, Kami-maruko, Ueda-shi, Nagano-ken, Japan.
Sony Corporation, 1–1–1 Konan, Minato-ku, Tokyo 108–0075, Japan.
Sony Ericsson Mobile Communications AB, Nya Vattentornet, SE–221 88 Lund, Sweden.
Stanley Electric Co., Ltd., 2–9–13, Nakameguro, Meguro-ku, Tokyo 153–8636, Japan.
Toshiba Corporation, 1–1, Shibaura 1-chome, Minato-ku, Tokyo 105–8001, Japan.
Vishay Intertechnology, Inc., 63 Lancaster Avenue, Malvern, Pennsylvania 19355.
Yellow Stone Corporation, No. 9, Lane 113, Chihyuan 2nd Road, Beitou District, Taipei, Taiwan.

(c) The Commission investigative attorney, party to this investigation, is Jeffrey T. Hsu, Esq., Office of Unfair Import Investigations, U.S. International Trade Commission, 500 E Street, SW., Suite 401, Washington, DC 20436; and

(3) For the investigation so instituted, the Honorable Paul J. Luckern is designated as the presiding administrative law judge.

Responses to the complaint and the notice of investigation must be submitted by the named respondents in accordance with section 210.13 of the Commission's Rules of Practice and Procedure, 19 CFR 210.13. Pursuant to 19 CFR 201.16(d) and 210.13(a), such responses will be considered by the Commission if received not later than 20 days after the date of service by the Commission of the complaint and the notice of investigation. Extensions of time for submitting responses to the complaint and the notice of investigation will not be granted unless good cause therefor is shown.

Failure of a respondent to file a timely response to each allegation in the complaint and in this notice may be deemed to constitute a waiver of the right to appear and contest the allegations of the complaint and this notice, and to authorize the administrative law judge and the Commission, without further notice to the respondent, to find the facts to be as alleged in the complaint and this notice and to enter an initial determination and a final determination containing such findings, and may result in the issuance of an exclusion order or a cease and desist order or both directed against the respondent.

By order of the Commission.

Issued: March 19, 2008.

Marilyn R. Abbott,

Secretary to the Commission.

[FR Doc. E8–5909 Filed 3–24–08; 8:45 am]

BILLING CODE 7020–02–P

INTERNATIONAL TRADE COMMISSION

[Investigation No. 731–TA–1135 (Preliminary)]

Sodium Metal From France

Determination

On the basis of the record [1] developed in the subject investigation, the United States International Trade Commission (Commission) determines, pursuant to section 733(a) of the Tariff Act of 1930 (19 U.S.C. 1673b(a)) (the Act), that there is a reasonable indication that an industry in the United States is materially injured by reason of imports from France of sodium metal, provided for in subheading 2805.11.00 of the Harmonized Tariff Schedule of the United States, that are alleged to be sold in the United States at less than fair value (LTFV).[2]

Commencement of Final Phase Investigation

Pursuant to section 207.18 of the Commission's rules, the Commission also gives notice of the commencement of the final phase of its investigation. The Commission will issue a final phase notice of scheduling, which will be published in the **Federal Register** as provided in section 207.21 of the Commission's rules, upon notice from the Department of Commerce (Commerce) of an affirmative preliminary determination in the investigation under section 733(b) of the Act, or, if the preliminary determination is negative, upon notice of an affirmative final determination in that investigation under section 735(a) of the Act. Parties that filed entries of appearance in the preliminary phase of the investigation need not enter a separate appearance for the final phase of the investigation. Industrial users, and, if the merchandise under investigation is sold at the retail level, representative consumer organizations have the right to appear as parties in Commission antidumping and countervailing duty investigations. The Secretary will prepare a public service list containing the names and addresses of all persons, or their representatives, who are parties to the investigation.

Background

Effective October 23, 2007, E.I. du Pont de Nemours and Co., Wilmington, DE, on behalf of the domestic industry that produces sodium metal, alleged that an industry in the United States is materially injured or threatened with material injury by reason of LTFV imports of sodium metal from France. Accordingly, effective October 23, 2007, the Commission instituted antidumping duty investigation No. 731–TA–1135 (Preliminary).

Notice of the institution of the Commission's investigation and of a public conference to be held in connection therewith was given by posting copies of the notice in the Office of the Secretary, U.S. International Trade Commission, Washington, DC, and by publishing the notice in the **Federal Register** of October 30, 2007 (72 FR 61374). The conference was held in Washington, DC, on November 13, 2007, and all persons who requested the opportunity were permitted to appear in person or by counsel.

The Commission transmitted its determination in this investigation to the Secretary of Commerce on December 7, 2007. The views of the Commission are contained in USITC Publication 3973 (December 2007), entitled *Sodium Metal from France: Investigation No. 731–TA–1135 (Preliminary)*.

By order of the Commission.

Issued: March 19, 2008.

Marilyn R. Abbott,

Secretary to the Commission.

[FR Doc. E8–5907 Filed 3–24–08; 8:45 am]

BILLING CODE 7020–02–P

[1] The record is defined in sec. 207.2(f) of the Commission's Rules of Practice and Procedure (19 CFR 207.2(f)).

[2] Chairman Daniel R. Pearson dissenting.

JUDICIAL CONFERENCE OF THE UNITED STATES

Meeting of the Judicial Conference Advisory Committee on Rules of Criminal Procedure

AGENCY: Judicial Conference of the United States Advisory Committee on Rules of Criminal Procedure.

ACTION: Notice of Open Meeting.

SUMMARY: The Advisory Committee on Rule of Criminal Procedure will hold a two-day meeting. The meeting will be open to public observation but not participation.

DATES: October 20–21, 2008. *Time:* 8:30 a.m. to 5 p.m.

ADDRESSES: Arizona Biltmore, 2400 East Missouri Avenue, Phoenix, AZ 85016.

FOR FURTHER INFORMATION CONTACT: John K. Rabiej, Chief, Rules Committee Support Office, Administrative Office of the United States Courts, Washington, DC 20544, telephone (202) 502–1820.

Dated: March 19, 2008.

John K. Rabiej,

Chief, Rules Committee Support Office.

[FR Doc. E8–5913 Filed 3–24–08; 8:45 am]

BILLING CODE 2210–55–M

JUDICIAL CONFERENCE OF THE UNITED STATES

Meeting of the Judicial Conference Advisory Committee on Rules of Bankruptcy Procedure

AGENCY: Judicial Conference of the United States Advisory Committee on Rules of Bankruptcy Procedure.

ACTION: Notice of Open Meeting.

SUMMARY: The Advisory Committee on Rules of Bankruptcy Procedure will hold a two-day meeting. The meeting will be open to public observation but not participation.

DATES: October 2–3, 2008.

Time: 8:30 a.m. to 5 p.m.

ADDRESSES: Hotel Teatro, 1100 14th Street, Denver, CO 80202.

FOR FURTHER INFORMATION CONTACT: John K. Rabiej, Chief, Rules Committee Support Office, Administrative Office of the United States Courts, Washington, DC 20544, telephone (202) 502–1820.

Dated: March 19, 2008.

John K. Rabiej,

Chief, Rules Committee Support Office.

[FR Doc. E8–5898 Filed 3–24–08; 8:45 am]

BILLING CODE 2210–55–M

JUDICIAL CONFERENCE OF THE UNITED STATES

Meeting of the Judicial Conference Committee; On Rules of Practice and Procedure

AGENCY: Judicial Conference of the United States Committee on Rules and Practice and Procedure.

ACTION: Notice of Open Meeting.

SUMMARY: The Committee on Rules of Practice and Procedure will hold a two-day meeting. The meeting will be open to public observation but not participation.

DATES: June 9–10, 2008.

TIME: 8:30 a.m. to 5 p.m.

ADDRESSES: Thurgood Marshall Federal Judiciary Building, Mecham Conference Center, One Columbus Circle, NE., Washington, DC 20544.

FOR FURTHER INFORMATION CONTACT: John K. Rabiej, Chief, Rules Committee Support Office, Administrative Office of the United States Courts, Washington, DC 20544, telephone (202) 502–1820.

Dated: March 19, 2008.

John K. Rabiej,

Chief, Rules Committee Support Office.

[FR Doc. E8–5914 Filed 3–24–08; 8:45 am]

BILLING CODE 2210–55–M

DEPARTMENT OF LABOR

Occupational Safety and Health Administration

Agency Information Collection Activity; Announcement of Office of Management and Budget (OMB) Control Number Under the Paperwork Reduction Act

AGENCY: Occupational Safety and Health Administration (OSHA), Labor.

ACTION: Notice; announcement of OMB approval of an information collection requirement.

SUMMARY: The Occupational Safety and Health Administration (OSHA) announces that the Office of Management and Budget (OMB) has extended its approval of a collection of information regarding occupational injuries and illnesses. OSHA sought approval under the Paperwork Reduction Act of 1995 (PRA–95), and, as required by that Act, is announcing the approval number and expiration date for this requirement.

DATES: *Effective Date:* This notice is effective March 25, 2008.

FOR FURTHER INFORMATION CONTACT: Joseph J. Dubois, Office of Statistical Analysis, Occupational Safety and Health Administration, U.S. Department of Labor, Room N–3507, 200 Constitution Avenue, NW., Washington, DC 20210, telephone: (202) 693–1875.

SUPPLEMENTARY INFORMATION: In the **Federal Register** of October 23, 2007 (72 FR 60028), the Agency announced its intent to request an extension of approval for 29 CFR Part 1904, Recording and Reporting Occupational Injuries and Illnesses. The Agency provided a 60-day comment period for the public to respond to OSHA's burden hour and cost estimates.

In accordance with PRA–95 (44 U.S.C. 3501–3520), OMB renewed its approval for the information collection requirement and assigned OMB control number 1218–0176. The approval expires on March 31, 2011.

In accordance with 5 CFR 1320.5(b), an agency cannot conduct, sponsor, or require a response to a collection of information unless the collection displays a valid OMB control number and the agency informs respondents that they are not required to respond to the collection of information unless it displays a currently valid OMB control number.

Authority and Signature

Edwin G. Foulke, Jr., Assistant Secretary of Labor for Occupational Safety and Health, directed the preparation of this notice. The authority for this notice is the Paperwork Reduction Act of 1995 (44 U.S.C. 3506 *et seq.*), and Secretary of Labor's Order No. 5–2007 (72 FR 31159).

Signed at Washington, DC, on March 20, 2008.

Edwin G. Foulke, Jr.,

Assistant Secretary of Labor for Occupational Safety and Health.

[FR Doc. E8–5989 Filed 3–24–08; 8:45 am]

BILLING CODE 4510–26–P

LIBRARY OF CONGRESS

Copyright Royalty Board

Notice of Intent To Audit

AGENCY: Copyright Royalty Board, Library of Congress.

ACTION: Public notice.

SUMMARY: The Copyright Royalty Judges are announcing receipt of a notice of intent to audit the 2006 and 2007 statements of account submitted by Last.fm, Ltd. concerning the royalty payments made under two statutory licenses.

FOR FURTHER INFORMATION CONTACT: Richard Strasser, Senior Attorney, or Gina Giuffreda, Attorney Advisor, by telephone at (202) 707–7658 or e-mail at *crb@loc.gov.*

SUPPLEMENTARY INFORMATION: In 1995, Congress enacted the Digital Performance Right in Sound Recordings Act of 1995 (''DPRA''), Public Law No. 104–39, which created an exclusive right for copyright owners of sound recordings subject to certain limitations, to perform publicly sound recordings by means of certain digital audio transmissions. Among the limitations on the performance right was the creation of a compulsory license for nonexempt noninteractive digital subscription transmissions. 17 U.S.C. 114(f).

Section 114 was later amended with the passage of the Digital Millennium Copyright Act of 1998 (''DMCA'' or ''the Act''), Public Law No. 105–304, to cover additional digital audio transmissions, including eligible nonsubscription transmissions.[1] In addition to expanding the section 114 license, the DMCA also created a statutory license to allow a service to make any necessary ephemeral reproductions to facilitate the digital transmission of the sound recording. 17 U.S.C. 112(e).

Licensees may operate under these licenses provided they pay the royalty fees and comply with the terms set by the Copyright Royalty Judges (the ''Judges''). On May 1, 2007, the Copyright Royalty Judges issued their final determination setting rates and terms for the section 112 and 114 licenses for the period 2006–2010. 72 FR 24084. As part of the terms set for these licenses, the Judges designated SoundExchange, Inc. as the organization charged with collecting the royalty payments and statements of account and distributing the royalties to the copyright owners and performers entitled to receive such royalties under the section 112 and 114 licenses. 37 CFR 380.4(b)(1). As the designated Collective, SoundExchange may conduct a single audit of a licensee for any calendar year for the purpose of verifying their royalty payments. SoundExchange must first file with the Judges a notice of intent to audit a licensee and serve the notice on the licensee to be audited. 37 CFR 380.6(b), (c).

On March 3, 2008, pursuant to 37 CFR 380.6(c), SoundExchange filed with the Judges a notice of intent to audit Last.fm, Ltd. for the years 2006 and 2007.[2] Section 380.6(c) requires the Judges to publish a notice in the **Federal Register** within 30 days of receipt of the notice announcing the Collective's intent to conduct an audit.

In accordance with 37 CFR 380.6(c), the Copyright Royalty Judges are publishing today's notice to fulfill this requirement with respect to SoundExchange's notice of intent to audit Last.fm, Ltd. filed on March 3, 2008.

Dated: March 19, 2008.

James Scott Sledge,

Chief Copyright Royalty Judge.

[FR Doc. E8–6068 Filed 3–24–08; 8:45 am]

BILLING CODE 1410–72–P

[1] An ''eligible nonsubscription transmission'' is a noninteractive digital audio transmission which, as the name implies, does not require a subscription for receiving the transmission. The transmission must also be made as a part of a service that provides audio programming consisting in whole or in part of performances of sound recordings the primary purpose of which is to provide audio or entertainment programming, but not to sell, advertise, or promote particular goods or services other than sound recordings, live concerts, or other music-related events. 17 U.S.C. 114(j)(6).

[2] SoundExchange also stated in the notice its intent to audit Last.fm Ltd. for the calendar year 2005. Verification of statements of account for 2005 are governed by 37 CFR 262.6(c) of the Copyright Office's regulations.

OFFICE OF MANAGEMENT AND BUDGET

Office of Federal Procurement Policy

Determination of Executive Compensation Benchmark Amount

AGENCY: Office of Federal Procurement Policy, OMB.

ACTION: Notice.

SUMMARY: The Office of Management and Budget (OMB) is publishing the attached memorandum to the heads of executive departments and agencies concerning the determination of the maximum benchmark compensation amount that will be allowable under government contracts during contractors' fiscal year 2008—$612,196. This determination is required under Section 39 of the Office of Federal Procurement Policy (OFPP) Act (41 U.S.C. 435), as amended. The benchmark compensation amount applies equally to both defense and civilian procurement agencies.

FOR FURTHER INFORMATION CONTACT: Laura Auletta, OFPP, at (202) 395–3256.

MEMORANDUM FOR THE HEADS OF EXECUTIVE DEPARTMENTS AND AGENCIES

From: Paul A. Denett, Administrator, OFPP.

Subject: Determination of Executive Compensation Benchmark Amount, Pursuant to Section 39 of the Office of Federal Procurement Policy, (OFPP) Act (41 U.S.C. 435), as amended.

This memorandum sets forth the benchmark compensation amount as required by Section 39 of the Office of Federal Procurement Policy (OFPP) Act (41 U.S.C. 435), as amended. Under Section 39, the benchmark compensation amount is the median amount of the compensation provided for all senior executives of benchmark corporations for the most recent year for which data is available. The benchmark compensation amount established by Section 39 limits the allowability of compensation costs under government contracts. The benchmark compensation amount does not limit the compensation that an executive may otherwise receive. This amount is based on data from commercially available surveys of executive compensation that analyze the relevant data made available by the Securities and Exchange Commission. More specifically, as required by Section 39 of the OFPP Act, the data used is the median (50th percentile) amount of compensation accrued over a recent 12-month period for the top five highest paid executives of publicly traded companies with annual sales over $50 million. After consultation with the Director of the Defense Contract Audit Agency, we have determined pursuant to the requirements of Section 39 that the benchmark compensation amount for contractors' fiscal year (FY) 2008 is $612,196. This amount is for contractors' FY 2008 and subsequent contractor fiscal years, unless and until revised by OFPP. The benchmark compensation amount applies to contract costs incurred after January 1, 2008, under covered contracts of both the defense and civilian procurement agencies as specified in Section 39 of the OFPP Act (41 U.S.C. 435), as amended. Questions concerning this memorandum may be addressed to Laura Auletta, OFPP, at (202) 395–3256.

Paul A. Denett,

Administrator, Office of Federal Procurement Policy.

[FR Doc. E8–5978 Filed 3–24–08; 8:45 am]

BILLING CODE 3110–01–P

NUCLEAR REGULATORY COMMISSION

Agency Information Collection Activities: Proposed Collection; Comment Request

AGENCY: U. S. Nuclear Regulatory Commission (NRC).

ACTION: Notice of pending NRC action to submit an information collection request to the Office of Management and Budget (OMB) and solicitation of public comment.

SUMMARY: The NRC is preparing a submittal to OMB for review of continued approval of information collections under the provisions of the Paperwork Reduction Act of 1995 (44 U.S.C. Chapter 35).

Information pertaining to the requirement to be submitted:

1. *The title of the information collection:* 10 CFR Part 20—Standards for Protection Against Radiation.

2. *Current OMB approval number:* 3150–0014.

3. *How often the collection is required:* Annually for most reports and at license termination for reports dealing with decommissioning.

4. *Who is required or asked to report:* NRC licensees, including those requesting license terminations.

5. *The number of annual respondents:* 4,512.

6. *The number of hours needed annually to complete the requirement or request:* 127,469 hours (3,709 hours for reporting [9.11 hours per response] plus 123,760 hours for recordkeeping [27.43 hours per recordkeeper]).

7. *Abstract:* 10 CFR Part 20 establishes standards for protection against ionizing radiation resulting from activities conducted under licenses issued by the NRC. These standards require the establishment of radiation protection programs, maintenance of radiation protection programs, maintenance of radiation records recording of radiation received by workers, reporting of incidents which could cause exposure to radiation, submittal of an annual report to NRC of the results of individual monitoring, and submittal of license termination information. These mandatory requirements are needed to protect occupationally exposed individuals from undue risks of excessive exposure to ionizing radiation and to protect the health and safety of the public.

Submit, by May 27, 2008, comments that address the following questions:

1. Is the proposed collection of information necessary for the NRC to properly perform its functions? Does the information have practical utility?

2. Is the burden estimate accurate?

3. Is there a way to enhance the quality, utility, and clarity of the information to be collected?

4. How can the burden of the information collection be minimized, including the use of automated collection techniques or other forms of information technology?

A copy of the draft supporting statement may be viewed free of charge at the NRC Public Document Room, One White Flint North, 11555 Rockville Pike, Room O–1 F21, Rockville, MD 20852. OMB clearance requests are available at the NRC worldwide Web site: *http://www.nrc.gov/public-involve/doc-comment/omb/index.html*. The document will be available on the NRC home page site for 60 days after the signature date of this notice.

Comments and questions about the information collection requirements may be directed to the NRC Clearance Officer, Margaret A. Janney (T–5 F52), U.S. Nuclear Regulatory Commission, Washington, DC 20555–0001, by telephone at 301–415–7245, or by email to *INFOCOLLECTS@NRC.GOV*.

Dated at Rockville, Maryland, this 19th day of March, 2008.

For the Nuclear Regulatory Commission.

Gregory Trussell,

Acting NRC Clearance Officer, Office of Information Services.

[FR Doc. E8–5968 Filed 3–24–08; 8:45 am]

BILLING CODE 7590–01–P

NUCLEAR REGULATORY COMMISSION

Biweekly Notice; Applications and Amendments to Facility Operating Licenses; Involving No Significant Hazards Considerations

I. Background

Pursuant to section 189a. (2) of the Atomic Energy Act of 1954, as amended (the Act), the U.S. Nuclear Regulatory Commission (the Commission or NRC staff) is publishing this regular biweekly notice. The Act requires the Commission publish notice of any amendments issued, or proposed to be issued and grants the Commission the authority to issue and make immediately effective any amendment to an operating license upon a determination by the Commission that such amendment involves no significant hazards consideration, notwithstanding the pendency before the Commission of a request for a hearing from any person.

This biweekly notice includes all notices of amendments issued, or proposed to be issued from February 28, 2008 to March 12, 2008. The last biweekly notice was published on March 11, 2008 (73 FR 13021).

Notice of Consideration of Issuance of Amendments to Facility Operating Licenses, Proposed No Significant Hazards Consideration Determination, and Opportunity for a Hearing

The Commission has made a proposed determination that the following amendment requests involve no significant hazards consideration. Under the Commission's regulations in 10 CFR 50.92, this means that operation of the facility in accordance with the proposed amendment would not (1) Involve a significant increase in the probability or consequences of an accident previously evaluated; or (2) create the possibility of a new or different kind of accident from any accident previously evaluated; or (3) involve a significant reduction in a margin of safety. The basis for this proposed determination for each amendment request is shown below.

The Commission is seeking public comments on this proposed determination. Any comments received within 30 days after the date of publication of this notice will be considered in making any final determination.

Normally, the Commission will not issue the amendment until the expiration of 60 days after the date of publication of this notice. The Commission may issue the license amendment before expiration of the 60-day period provided that its final determination is that the amendment involves no significant hazards consideration. In addition, the Commission may issue the amendment prior to the expiration of the 30-day comment period should circumstances change during the 30-day comment period such that failure to act in a timely way would result, for example in derating or shutdown of the facility. Should the Commission take action prior to the expiration of either the comment period or the notice period, it will publish in the **Federal Register** a notice of issuance. Should the Commission make a final No Significant Hazards Consideration Determination, any hearing will take place after issuance. The Commission expects that the need to take this action will occur very infrequently.

Written comments may be submitted by mail to the Chief, Rulemaking, Directives and Editing Branch, Division of Administrative Services, Office of Administration, U.S. Nuclear Regulatory Commission, Washington, DC 20555–0001, and should cite the publication date and page number of this **Federal Register** notice. Written comments may also be delivered to Room 6D22, Two White Flint North, 11545 Rockville Pike, Rockville, Maryland, from 7:30 a.m. to 4:15 p.m. Federal workdays. Copies of written comments received may be examined at the Commission's Public Document Room (PDR), located at One White Flint North, Public File Area O1F21, 11555 Rockville Pike (first floor), Rockville, Maryland. The filing of requests for a hearing and petitions for leave to intervene is discussed below.

Within 60 days after the date of publication of this notice, person(s) may file a request for a hearing with respect to issuance of the amendment to the subject facility operating license and any person whose interest may be affected by this proceeding and who wishes to participate as a party in the proceeding must file a written request via electronic submission through the NRC E-Filing system for a hearing and a petition for leave to intervene. Requests for a hearing and a petition for leave to intervene shall be filed in accordance with the Commission's ''Rules of Practice for Domestic Licensing Proceedings'' in 10 CFR part 2. Interested person(s) should consult a current copy of 10 CFR 2.309, which is available at the Commission's PDR, located at One White Flint North, Public File Area 01F21, 11555 Rockville Pike (first floor), Rockville, Maryland. Publicly available records will be accessible from the Agencywide Documents Access and Management System's (ADAMS) Public Electronic Reading Room on the Internet at the NRC Web site, *http://www.nrc.gov/reading-rm/doc-collections/cfr/*. If a request for a hearing or petition for leave to intervene is filed within 60 days, the Commission or a presiding officer designated by the Commission or by the Chief Administrative Judge of the Atomic Safety and Licensing Board Panel, will rule on the request and/or petition; and the Secretary or the Chief Administrative Judge of the Atomic Safety and Licensing Board will issue a notice of a hearing or an appropriate order.

As required by 10 CFR 2.309, a petition for leave to intervene shall set forth with particularity the interest of the petitioner in the proceeding, and how that interest may be affected by the results of the proceeding. The petition should specifically explain the reasons why intervention should be permitted with particular reference to the following general requirements: (1) The name, address, and telephone number of the requestor or petitioner; (2) the nature of the requestor's/petitioner's right under the Act to be made a party to the proceeding; (3) the nature and extent of the requestor's/petitioner's property, financial, or other interest in the proceeding; and (4) the possible effect of any decision or order which may be entered in the proceeding on the requestor's/petitioner's interest. The petition must also set forth the specific contentions which the petitioner/requestor seeks to have litigated at the proceeding.

Each contention must consist of a specific statement of the issue of law or fact to be raised or controverted. In addition, the petitioner/requestor shall provide a brief explanation of the bases for the contention and a concise statement of the alleged facts or expert opinion which support the contention and on which the petitioner/requestor intends to rely in proving the contention at the hearing. The petitioner/requestor must also provide references to those specific sources and documents of which the petitioner is aware and on which the petitioner/requestor intends to rely to establish those facts or expert opinion. The petition must include sufficient information to show that a genuine dispute exists with the applicant on a material issue of law or fact. Contentions shall be limited to matters within the scope of the amendment under consideration. The contention must be one which, if proven, would entitle the petitioner/requestor to relief. A petitioner/requestor who fails to satisfy these requirements with respect to at least one

contention will not be permitted to participate as a party.

Those permitted to intervene become parties to the proceeding, subject to any limitations in the order granting leave to intervene, and have the opportunity to participate fully in the conduct of the hearing.

If a hearing is requested, and the Commission has not made a final determination on the issue of no significant hazards consideration, the Commission will make a final determination on the issue of no significant hazards consideration. The final determination will serve to decide when the hearing is held. If the final determination is that the amendment request involves no significant hazards consideration, the Commission may issue the amendment and make it immediately effective, notwithstanding the request for a hearing. Any hearing held would take place after issuance of the amendment. If the final determination is that the amendment request involves a significant hazards consideration, any hearing held would take place before the issuance of any amendment.

A request for hearing or a petition for leave to intervene must be filed in accordance with the NRC E-Filing rule, which the NRC promulgated in August 28, 2007 (72 FR 49139). The E-Filing process requires participants to submit and serve documents over the internet or in some cases to mail copies on electronic storage media. Participants may not submit paper copies of their filings unless they seek a waiver in accordance with the procedures described below.

To comply with the procedural requirements of E-Filing, at least five (5) days prior to the filing deadline, the petitioner/requestor must contact the Office of the Secretary by e-mail at: *hearingdocket@nrc.gov,* or by calling (301) 415–1677, to request (1) a digital ID certificate, which allows the participant (or its counsel or representative) to digitally sign documents and access the E-Submittal server for any proceeding in which it is participating; and/or (2) creation of an electronic docket for the proceeding (even in instances in which the petitioner/requestor (or its counsel or representative) already holds an NRC-issued digital ID certificate). Each petitioner/requestor will need to download the Workplace Forms Viewer$_{TM}$ to access the Electronic Information Exchange (EIE), a component of the E-Filing system. The Workplace Forms Viewer$_{TM}$ is free and is available at: *http://www.nrc.gov/site-help/e-submittals/install-viewer.html.* Information about applying for a digital ID certificate is available on NRC's public Web site at :*http://www.nrc.gov/site-help/e-submittals/apply-certificates.html.*

Once a petitioner/requestor has obtained a digital ID certificate, had a docket created, and downloaded the EIE viewer, it can then submit a request for hearing or petition for leave to intervene. Submissions should be in Portable Document Format (PDF) in accordance with NRC guidance available on the NRC public Web site at *http://www.nrc.gov/site-help/e-submittals.html.* A filing is considered complete at the time the filer submits its documents through EIE. To be timely, an electronic filing must be submitted to the EIE system no later than 11:59 p.m. Eastern Time on the due date. Upon receipt of a transmission, the E-Filing system time-stamps the document and sends the submitter an e-mail notice confirming receipt of the document. The EIE system also distributes an e-mail notice that provides access to the document to the NRC Office of the General Counsel and any others who have advised the Office of the Secretary that they wish to participate in the proceeding, so that the filer need not serve the documents on those participants separately. Therefore, applicants and other participants (or their counsel or representative) must apply for and receive a digital ID certificate before a hearing request/petition to intervene is filed so that they can obtain access to the document via the E-Filing system.

A person filing electronically may seek assistance through the ''Contact Us'' link located on the NRC Web site at: *http://www.nrc.gov/site-help/e-submittals.html* or by calling the NRC technical help line, which is available between 8:30 a.m. and 4:15 p.m., Eastern Time, Monday through Friday. The help line number is (800) 397–4209 or locally, (301) 415–4737.

Participants who believe that they have a good cause for not submitting documents electronically must file a motion, in accordance with 10 CFR 2.302(g), with their initial paper filing requesting authorization to continue to submit documents in paper format. Such filings must be submitted by: (1) First class mail addressed to the Office of the Secretary of the Commission, U.S. Nuclear Regulatory Commission, Washington, DC 20555–0001, Attention: Rulemaking and Adjudications Staff; or (2) courier, express mail, or expedited delivery service to the Office of the Secretary, Sixteenth Floor, One White Flint North, 11555 Rockville, Pike, Rockville, Maryland, 20852, Attention: Rulemaking and Adjudications Staff. Participants filing a document in this manner are responsible for serving the document on all other participants. Filing is considered complete by first-class mail as of the time of deposit in the mail, or by courier, express mail, or expedited delivery service upon depositing the document with the provider of the service.

Non-timely requests and/or petitions and contentions will not be entertained absent a determination by the Commission, the presiding officer, or the Atomic Safety and Licensing Board that the petition and/or request should be granted and/or the contentions should be admitted, based on a balancing of the factors specified in 10 CFR 2.309(c)(1)(i)–(viii). To be timely, filings must be submitted no later than 11:59 p.m. Eastern Time on the due date.

Documents submitted in adjudicatory proceedings will appear in NRC's electronic hearing docket which is available to the public at: *http://ehd.nrc.gov/EHD_Proceeding/home.asp*, unless excluded pursuant to an order of the Commission, an Atomic Safety and Licensing Board, or a Presiding Officer. Participants are requested not to include personal privacy information, such as social security numbers, home addresses, or home phone numbers in their filings. With respect to copyrighted works, except for limited excerpts that serve the purpose of the adjudicatory filings and would constitute a Fair Use application, participants are requested not to include copyrighted materials in their submission.

For further details with respect to this amendment action, see the application for amendment which is available for public inspection at the Commission's PDR, located at One White Flint North, Public File Area 01F21, 11555 Rockville Pike (first floor), Rockville, Maryland. Publicly available records will be accessible from the ADAMS Public Electronic Reading Room on the Internet at the NRC Web site, *http://www.nrc.gov/reading-rm/adams.html.* If you do not have access to ADAMS or if there are problems in accessing the documents located in ADAMS, contact the PDR Reference staff at 1 (800) 397–4209, (301) 415–4737 or by e-mail to: *pdr@nrc.gov.*

Duke Power Company LLC, et. al., Docket Nos. 50–413 and 50–414, Catawba Nuclear Station, Units 1 and 2, York County, South Carolina

Date of amendment request: December 11, 2007.

Description of amendment request: The amendments would revise the

Technical Specifications (TSs) permitting relaxation of the allowed bypass test times and completion times for various systems in accordance with Technical Specification Task Force Traveler (TSTF) 418, Revision 2, ''RPS and ESFAS Test Times and Completion Times (WCAP–14333).

Basis for proposed no significant hazards consideration determination: As required by 10 CFR 50.91(a), the licensee has provided its analysis of the issue of no significant hazards consideration, which is presented below:

First Standard

Does operation of the facility in accordance with the proposed amendment involve a significant increase in the probability or consequences of an accident previously evaluated?

Response: No.

The proposed changes to the Completion Times, bypass test time, and Surveillance Frequencies reduces the potential for inadvertent reactor trips and spurious actuations, and therefore do not increase the probability of any accident previously evaluated. The proposed changes to the Completion Times and bypass test time do not change the response of the plant to any accidents and have an insignificant impact on the reliability of the reactor trip system and engineered safety feature actuation system (RTS and ESFAS) signals. The RTS and ESFAS will remain highly reliable and the proposed changes will not result in a significant increase in the risk of plant operation. This is demonstrated by showing that the impact on plant safety as measured by core damage frequency (CDF) is less than 1.0E–06 per year and the impact on large early release frequency (LERF) is less than 1.0E–07 per year. In addition, for the Completion Time change, the incremental conditional core damage probabilities (ICCDP) and incremental conditional large early release probabilities (ICLERP) are less than 5.0E–07 and 5.0E–08, respectively. These changes meet the acceptance criteria in Regulatory Guides 1.174 and 1.177. Therefore, since the RTS and ESFAS will continue to perform their functions with high reliability as originally assumed, and the increase in risk as measured by CDF, LERF, ICCDP, and ICLERP is within the acceptance criteria of existing regulatory guidance, there will not be a significant increase in the consequences of any accidents.

The proposed changes do not adversely affect accident initiators or precursors nor alter the design assumptions, conditions, or configuration of the facility or the manner in which the plant is operated and maintained. The proposed changes do not alter or prevent the ability of structures, systems, and components (SSCs) from performing their intended function to mitigate the consequences of an initiating event within the assumed acceptance limits. The proposed changes do not affect the source term, containment isolation, or radiological release assumptions used in evaluating the radiological consequences of an accident previously evaluated. Further, the proposed changes do not increase the types or amounts of radioactive effluent that may be released offsite, nor significantly increase individual or cumulative occupational/public radiation exposures. The proposed changes are consistent with safety analysis assumptions and resultant consequences.

The determination on risk impacts that the results of the proposed changes are acceptable was established in the NRC Safety Evaluations prepared for WCAP–14333–P–A (issued by letter dated July 15, 1998) and for WCAP–15376–P–A (issued by letter dated December 20, 2002). Implementation of the proposed changes will result in an insignificant risk impact. Applicability of these conclusions has been verified through plant-specific reviews and implementation of the generic analysis results in accordance with the respective NRC Safety Evaluation conditions.

The proposed changes based on TSTF–246 do not involve any physical alteration of plant SSCs. The remaining intermediate range and power range nuclear instruments remain operable and have required actions that ensure compliance with applicable safety analyses.

Therefore, it is concluded that this change does not increase the probability of occurrence of a malfunction of equipment important to safety.

Second Standard

Does operation of the facility in accordance with the proposed amendment create the possibility of a new or different kind of accident from any accident previously evaluated?

Response: No.

The proposed changes do not result in a change in the manner in which the RTS or ESFAS provide plant protection. The RTS and ESFAS will continue to have the same setpoints after the proposed changes are implemented. There are no design changes associated with the license amendment. The changes to Completion Times, bypass test times, and Surveillance Frequencies do not change any existing accident scenarios, nor create any new or different accident scenarios. The changes do not involve a physical alteration of the plant (*i.e.*, no new or different type of equipment will be installed) or a change in the methods governing normal plant operation. In addition, the changes do not alter assumptions made in the safety analysis. The proposed changes are consistent with the safety analysis assumptions and current plant operating practice.

The proposed changes do not introduce new failure mechanisms for systems, structures, or components not already considered in the UFSAR. Therefore, the possibility of a new or different kind of accident from any accident previously evaluated is not created because no new failure mechanisms or initiating events have been introduced.

Third Standard

Does operation of the facility in accordance with the proposed amendment involve a significant reduction in the margin of safety?

Response: No.

The proposed changes do not alter the manner in which safety limits, limiting safety system settings, or limiting conditions for operation are determined. The safety analysis acceptance criteria are not impacted by these changes.

Redundant RTS and ESFAS trains are maintained, and diversity with regard to the signals that provide reactor trip and ESFAS is also maintained. Signals credited as primary or secondary and operator actions credited in the accident analyses will remain the same. The proposed changes will not result in plant operation in a configuration outside design basis. The calculated impact on risk is insignificant and meets the acceptance criteria contained in Regulatory Guides 1.174 and 1.177. Although there was no attempt to quantify any positive human factors benefit due to increased Completion Times and bypass test time, it is expected that there would be a net benefit due to a reduced potential for spurious reactor trips and actuations associated with testing.

Implementation of the proposed changes is expected to result in an overall improvement in safety, as follows:

a. Reduced testing will result in fewer inadvertent reactor trips, less frequent actuation of ESFAS components, less frequent distraction of operations personnel without significantly affecting RTS and ESFAS reliability.

b. Improvements in the effectiveness of the operating staff in monitoring and controlling plant operation will be realized. This is due to less frequent distraction of the operators and shift supervisor to attend to instrumentation Required Actions with short Completion Times.

c. Longer repair times associated with increased Completion Times will lead to higher quality repairs and improved reliability.

d. The Completion Time extensions for the reactor trip breakers will provide the utilities additional time to complete test and maintenance activities while at power, potentially reducing the number of forced outages related to compliance with reactor trip breaker Completion Times, and provide consistency with the Completion Times for the logic trains.

Therefore, it is concluded that this change does not involve a significant reduction in the margin of safety.

The NRC staff has reviewed the licensee's analysis and, based on this review, it appears that the three standards of 10 CFR 50.92(c) are satisfied. Therefore, the NRC staff proposes to determine that the amendment request involves no significant hazards consideration.

Attorney for licensee: Ms. Lisa F. Vaughn, Associate General Counsel and Managing Attorney, Duke Energy Carolinas, LLC, 526 South Church Street, EC07H, Charlotte, NC 28202.

NRC Branch Chief: Melanie Wong.

Duke Power Company LLC, Docket Nos. 50–369 and 50–370, McGuire Nuclear Station, Units 1 and 2, Mecklenburg County, North Carolina

Date of amendment request: December 11, 2007.

Description of amendment request: The proposed amendments would revise the Technical Specifications permitting relaxation of the allowed bypass test times and completion times for various systems in accordance with Technical Specification Task Force Traveler (TSTF) 418, Revision 2, ''RPS and ESFAS Test Times and Completion Times (WCAP–14333).

Basis for proposed no significant hazards consideration determination: As required by 10 CFR 50.91(a), the licensee has provided its analysis of the issue of no significant hazards consideration, which is presented below:

First Standard

Does operation of the facility in accordance with the proposed amendment involve a significant increase in the probability or consequences of an accident previously evaluated?

Response: No.

The proposed changes to the Completion Times, bypass test time, and Surveillance Frequencies reduces the potential for inadvertent reactor trips and spurious actuations, and therefore do not increase the probability of any accident previously evaluated. The proposed changes to the Completion Times and bypass test time do not change the response of the plant to any accidents and have an insignificant impact on the reliability of the reactor trip system and engineered safety feature actuation system (RTS and ESFAS) signals. The RTS and ESFAS will remain highly reliable and the proposed changes will not result in a significant increase in the risk of plant operation. This is demonstrated by showing that the impact on plant safety as measured by core damage frequency (CDF) is less than 1.0E–06 per year and the impact on large early release frequency (LERF) is less than 1.0E–07 per year. In addition, for the Completion Time change, the incremental conditional core damage probabilities (ICCDP) and incremental conditional large early release probabilities (ICLERP) are less than 5.0E–07 and 5.0E–08, respectively. These changes meet the acceptance criteria in Regulatory Guides 1.174 and 1.177. Therefore, since the RTS and ESFAS will continue to perform their functions with high reliability as originally assumed, and the increase in risk as measured by CDF, LERF, ICCDP, and ICLERP is within the acceptance criteria of existing regulatory guidance, there will not be a significant increase in the consequences of any accidents.

The proposed changes do not adversely affect accident initiators or precursors nor alter the design assumptions, conditions, or configuration of the facility or the manner in which the plant is operated and maintained. The proposed changes do not alter or prevent the ability of structures, systems, and components (SSCs) from performing their intended function to mitigate the consequences of an initiating event within the assumed acceptance limits. The proposed changes do not affect the source term, containment isolation, or radiological release assumptions used in evaluating the radiological consequences of an accident previously evaluated. Further, the proposed changes do not increase the types or amounts of radioactive effluent that may be released offsite, nor significantly increase individual or cumulative occupational/public radiation exposures. The proposed changes are consistent with safety analysis assumptions and resultant consequences.

The determination that the results of the proposed changes are acceptable was established in the NRC Safety Evaluations prepared for WCAP–14333–P–A (issued by letter dated July 15, 1998) and for WCAP–15376–P–A (issued by letter dated December 20, 2002). Implementation of the proposed changes will result in an insignificant risk impact. Applicability of these conclusions has been verified through plant-specific reviews and implementation of the generic analysis results in accordance with the respective NRC Safety Evaluation conditions.

The proposed changes based on TSTF–246 do not involve any physical alteration of plant systems, structures, or components. The remaining intermediate range and power range nuclear instruments remain operable and have required actions that ensure compliance with applicable safety analyses.

Therefore, it is concluded that this change does not increase the probability of occurrence of a malfunction of equipment important to safety.

Second Standard

Does operation of the facility in accordance with the proposed amendment create the possibility of a new or different kind of accident from any accident previously evaluated?

Response: No.

The proposed changes do not result in a change in the manner in which the RTS or ESFAS provide plant protection. The RTS and ESFAS will continue to have the same setpoints after the proposed changes are implemented. There are no design changes associated with the license amendment. The changes to Completion Times, bypass test times, and Surveillance Frequencies do not change any existing accident scenarios, nor create any new or different accident scenarios. The changes do not involve a physical alteration of the plant (*i.e.*, no new or different type of equipment will be installed) or a change in the methods governing normal plant operation. In addition, the changes do not alter assumptions made in the safety analysis. The proposed changes are consistent with the safety analysis assumptions and current plant operating practice.

The proposed changes do not introduce new failure mechanisms for systems, structures, or components not already considered in the UFSAR. Therefore, the possibility of a new or different kind of accident from any accident previously evaluated is not created because no new failure mechanisms or initiating events have been introduced.

Third Standard

Does operation of the facility in accordance with the proposed amendment involve a significant reduction in the margin of safety?

Response: No.

The proposed changes do not alter the manner in which safety limits, limiting safety system settings, or limiting conditions for operation are determined. The safety analysis acceptance criteria are not impacted by these changes.

Redundant RTS and ESFAS trains are maintained, and diversity with regard to the signals that provide reactor trip and ESFAS is also maintained. Signals credited as primary or secondary and operator actions credited in the accident analyses will remain the same. The proposed changes will not result in plant operation in a configuration outside design basis. The calculated impact on risk is insignificant and meets the acceptance criteria contained in Regulatory Guides 1.174 and 1.177. Although there was no attempt to quantify any positive human factors benefit due to increased Completion Times and bypass test time, it is expected that there would be a net benefit due to a reduced potential for spurious reactor trips and actuations associated with testing.

Implementation of the proposed changes is expected to result in an overall improvement in safety, as follows:

e. Reduced testing will result in fewer inadvertent reactor trips, less frequent actuation of ESFAS components, less frequent distraction of operations personnel without significantly affecting RTS and ESFAS reliability.

f. Improvements in the effectiveness of the operating staff in monitoring and controlling plant operation will be realized. This is due to less frequent distraction of the operators and shift supervisor to attend to instrumentation Required Actions with short Completion Times.

g. Longer repair times associated with increased Completion Times will lead to higher quality repairs and improved reliability.

h. The Completion Time extensions for the reactor trip breakers will provide the utilities additional time to complete test and maintenance activities while at power, potentially reducing the number of forced outages related to compliance with reactor trip breaker Completion Times, and provide consistency with the Completion Times for the logic trains.

Therefore, it is concluded that this change does not involve a significant reduction in the margin of safety.

The NRC staff has reviewed the licensee's analysis and, based on this review, it appears that the three standards of 10 CFR 50.92(c) are satisfied. Therefore, the NRC staff proposes to determine that the amendment request involves no significant hazards consideration.

Attorney for licensee: Ms. Lisa F.

Vaughn, Associate General Counsel and Managing Attorney, Duke Energy Carolinas, LLC, 526 South Church Street, EC07H, Charlotte, NC 28202.
NRC Branch Chief: Melanie Wong.

Duke Power Company LLC, Docket Nos. 50–369 and 50–370, McGuire Nuclear Station, Units 1 and 2, Mecklenburg County, North Carolina

Date of amendment request: January 22, 2008.

Description of amendment request: The proposed amendments would modify Technical Specification (TS) requirements related to control room envelope habitability in accordance with Technical Specification Task Force (TSTF)–448, Revision 3, ''Control Room Habitability.'' For McGuire Nuclear Station, Units 1 and 2, this TSTF revises TS 3.7.9, Control Room Area Ventilation System (CRAVS), and adds a new administrative controls program, TS 5.5.16, Control Room Envelope Habitability Program.

The NRC staff issued a notice of opportunity for comment in the **Federal Register** on October 17, 2006 (71 FR 61075) on possible license amendments adopting TSTF–448 using the NRC's consolidated line item improvement process (CLIIP) for amending the licensee's TSs, which included a model safety evaluation (SE) and model no significant hazards consideration (NSHC) determination. The NRC staff subsequently issued a notice of availability of the models for referencing in license amendment applications in the **Federal Register** on January 17, 2007 (72 FR 2022), which included the resolution of public comments on the model SE. The licensee has affirmed the applicability of the following NSHC determination in its application.

Basis for proposed no significant hazards consideration determination: As required by 10 CFR 50.91(a), an analysis of the issue of no significant hazards consideration is presented below.

Criterion 1—The Proposed Change Does Not Involve a Significant Increase in the Probability or Consequences of an Accident Previously Evaluated

The proposed change does not adversely affect accident initiators or precursors nor alter the design assumptions, conditions, or configuration of the facility. The proposed change does not alter or prevent the ability of structures, systems, and components (SSCs) to perform their intended function to mitigate the consequences of an initiating event within the assumed acceptance limits. The proposed change revises the TS for the control room envelope (CRE) emergency ventilation system, which is a mitigation system designed to minimize unfiltered air leakage into the CRE and to filter the CRE atmosphere to protect the CRE occupants in the event of accidents previously analyzed. An important part of the CRE emergency ventilation system is the CRE boundary. The CRE emergency ventilation system is not an initiator or precursor to any accident previously evaluated. Therefore, the probability of any accident previously evaluated is not increased. Performing tests to verify the operability of the CRE boundary and implementing a program to assess and maintain CRE habitability ensure that the CRE emergency ventilation system is capable of adequately mitigating radiological consequences to CRE occupants during accident conditions, and that the CRE emergency ventilation system will perform as assumed in the consequence analyses of design basis accidents. Thus, the consequences of any accident previously evaluated are not increased. Therefore, the proposed change does not involve a significant increase in the probability or consequences of an accident previously evaluated.

Criterion 2—The Proposed Change Does Not Create the Possibility of a New or Different Kind of Accident from any Accident Previously Evaluated

The proposed change does not impact the accident analysis. The proposed change does not alter the required mitigation capability of the CRE emergency ventilation system, or its functioning during accident conditions as assumed in the licensing basis analyses of design basis accident radiological consequences to CRE occupants. No new or different accidents result from performing the new surveillance or following the new program. The proposed change does not involve a physical alteration of the plant (i.e., no new or different type of equipment will be installed) or a significant change in the methods governing normal plant operation. The proposed change does not alter any safety analysis assumptions and is consistent with current plant operating practice. Therefore, this change does not create the possibility of a new or different kind of accident from any accident previously evaluated.

Criterion 3—The Proposed Change Does Not Involve a Significant Reduction in the Margin of Safety

The proposed change does not alter the manner in which safety limits, limiting safety system settings or limiting conditions for operation are determined. The proposed change does not affect safety analysis acceptance criteria. The proposed change will not result in plant operation in a configuration outside the design basis for an unacceptable period of time without compensatory measures. The proposed change does not adversely affect systems that respond to safely shut down the plant and to maintain the plant in a safe shutdown condition.

Therefore, the proposed change does not involve a significant reduction in a margin of safety.

The NRC staff proposes to determine that the amendment request involves no significant hazards consideration.

Attorney for licensee: Ms. Lisa F. Vaughn, Associate General Counsel and Managing Attorney, Duke Energy Carolinas, LLC, 526 South Church Street, EC07H, Charlotte, NC 28202.
NRC Branch Chief: Melanie C. Wong.

Entergy Nuclear Operations, Inc., Docket No. 50–247, Indian Point Nuclear Generating Unit No. 2 (IP2), Westchester County, New York

Date of amendment request: December 13, 2007.

Description of amendment request: The proposed amendment would add some Emergency Core Cooling System (ECCS) valves and remove other ECCS valves from Surveillance Requirement (SR) 3.5.2.1. The purpose of the SR is to verify that ECCS valves whose single failure could cause loss of the ECCS function are in the required position with power removed so that the single failure could not occur. The valves being added are currently controlled administratively. The valves being removed have been evaluated to demonstrate that a single failure would not cause loss of the ECCS function.

Basis for proposed no significant hazards consideration determination: As required by 10 CFR 50.91(a), the licensee has provided its analysis of the issue of no significant hazards consideration, which is presented below:

1. Does the proposed change involve a significant increase in the probability or consequences of an accident previously evaluated.

Response: No.

The proposed change adds three ECCS valves and removes four ECCS valves from IP2 SR 3.5.2.1. The purpose of the surveillance is to assure that the valves are in their required position with power removed so that misalignment or single failure cannot prevent completion of the ECCS function. The performance of the SR does not involve any actions related to the initiation of an accident and therefore the proposed changes cannot increase the probability of an accident. Misalignment or single failure of one of the three valves being added to TS could cause a loss of the ECCS function so the change will not increase the consequences of an accident but rather provide assurance that no such increase can occur. Removal of the four valves has been evaluated and the evaluation demonstrates that the misalignment or single failure of one of the valves will not affect the ECCS function and therefore will not increase the consequences of an accident. Therefore, the proposed change does not involve a significant increase in the probability or consequences of an accident previously evaluated.

2. Does the proposed change create the possibility of a new or different kind of accident from any accident previously evaluated?

Response: No.

The proposed change adds three ECCS valves and removes four ECCS valves from IP2 SR 3.5.2.1. The purpose of the surveillance is to assure that the valves are in their required position with power removed so that misalignment or single failure cannot prevent completion of the ECCS function. The removal of valves from the surveillance allows power to be maintained to the valves during normal operation but does not otherwise affect the function of the valves or the design and operation of plant systems. The addition of power does mean that the valves could fail open but this does not create the possibility of a new or different type of accident since such a failure mode is currently evaluated. The performance of the SR for added valves does not affect the function of the valves or the manner in which the valves or their systems are operated or any procedures used for valve or system operation. The change assures that the valves will be in their correct position and does not introduce any new failure modes or the possibility of a different accident. Therefore, the proposed change does not create the possibility of a new or different kind of accident from any accident previously evaluated.

3. Does the proposed change involve a significant reduction in the margin of safety?

Response: No.

The proposed change adds three ECCS valves and removes four ECCS valves from IP2 SR 3.5.2.1. The purpose of the surveillance is to assure that the valves are in their required position with power removed so that misalignment or single failure cannot prevent completion of the ECCS function. The addition of the three valves to the TS provides additional assurance that operation will be with power removed and the valves in the correct position. This increases safety margin. Removal of valves from the surveillance is based on analysis of the effects of misalignment or single failure on the ECCS function. Analysis demonstrates that the misalignment or single failure would not adversely affect the ECCS function and therefore there is no significant reduction in the margin of safety. The margin of safety remains adequate to assure the ECCS function is performed.

The NRC staff has reviewed the licensee's analysis and, based on this review, it appears that the three standards of 10 CFR 50.92(c) are satisfied. Therefore, the NRC staff proposes to determine that the amendment request involves no significant hazards consideration.

Attorney for licensee: Mr. William C. Dennis, Assistant General Counsel, Entergy Nuclear Operations, Inc., 440 Hamilton Avenue, White Plains, NY 10601.

NRC Branch Chief: Mark G. Kowal.

Entergy Nuclear Operations, Inc., Docket Nos. 50–247 and 50–286, Indian Point Nuclear Generating Unit Nos. 2 and 3, Westchester County, New York

Date of amendment request: December 18, 2007.

Description of amendment request: The proposed amendment would modify Technical Specification (TS) requirements related to control room envelope habitability by adding a Control Room Envelope Habitability Program and then referencing this program in place of existing surveillances. It also standardizes terminology and modifies other TS related to the control room envelope.

This change was proposed by the industry's Technical Specification Task Force (TSTF) and is designated TSTF–448, Revision 3. The NRC staff issued a notice of opportunity for comment in the **Federal Register** on October 17, 2006 (71 FR 61075), on possible amendments concerning TSTF–448, including a model safety evaluation and model no significant hazards (NSHC) determination, using the consolidated line item improvement process (CLIIP). The NRC staff subsequently issued a notice of availability of the models for referencing in license amendment applications in the **Federal Register** on January 17, 2007 (72 FR 2022). The licensee affirmed the applicability of the following NSHC determination in its application dated December 18, 2007.

Basis for proposed no significant hazards consideration determination: As required by 10 CFR 50.91(a), an analysis of the issue of no significant hazards consideration is presented below:

Criterion 1—The Proposed Change Does Not Involve a Significant Increase in the Probability or Consequences of an Accident Previously Evaluated

The proposed change does not adversely affect accident initiators or precursors nor alter the design assumptions, conditions, or configuration of the facility. The proposed change does not alter or prevent the ability of structures, systems, and components (SSCs) to perform their intended function to mitigate the consequences of an initiating event within the assumed acceptance limits.

The proposed change revises the TS for the CRE emergency ventilation system, which is a mitigation system designed to minimize unfiltered air leakage into the CRE and to filter the CRE atmosphere to protect the CRE occupants in the event of accidents previously analyzed. An important part of the CRE emergency ventilation system is the CRE boundary. The CRE emergency ventilation system is not an initiator or precursor to any accident previously evaluated. Therefore, the probability of any accident previously evaluated is not increased.

Performing tests to verify the operability of the CRE boundary and implementing a program to assess and maintain CRE habitability ensure that the CRE emergency ventilation system is capable of adequately mitigating radiological consequences to CRE occupants during accident conditions, and that the CRE emergency ventilation system will perform as assumed in the consequence analyses of design basis accidents. Thus, the consequences of any accident previously evaluated are not increased.

Therefore, the proposed change does not involve a significant increase in the probability or consequences of an accident previously evaluated.

Criterion 2—The Proposed Change Does Not Create the Possibility of a New or Different Kind of Accident From Any Accident Previously Evaluated

The proposed change does not impact the accident analysis. The proposed change does not alter the required mitigation capability of the CRE emergency ventilation system, or its functioning during accident conditions as assumed in the licensing basis analyses of design basis accident radiological consequences to CRE occupants. No new or different accidents result from performing the new surveillance or following the new program. The proposed change does not involve a physical alteration of the plant (i.e., no new or different type of equipment will be installed) or a significant change in the methods governing normal plant operation. The proposed change does not alter any safety analysis assumptions and is consistent with current plant operating practice.

Therefore, this change does not create the possibility of a new or different kind of accident from any accident previously evaluated.

Criterion 3—The Proposed Change Does Not Involve a Significant Reduction in the Margin of Safety

The proposed change does not alter the manner in which safety limits, limiting safety system settings or limiting conditions for operation are determined. The proposed change does not affect safety analysis acceptance criteria. The proposed change will not result in plant operation in a configuration outside the design basis for an unacceptable period of time without compensatory measures. The proposed change does not adversely affect systems that respond to safely shut down the plant and to maintain the plant in a safe shutdown condition.

Therefore, the proposed change does not involve a significant reduction in a margin of safety.

The NRC staff has reviewed this analysis and, based on this review, it appears that the three standards of 10 CFR 50.92(c) are satisfied. Therefore, the NRC staff proposes to determine that the amendment request involves no significant hazards consideration.

Attorney for licensee: Mr. William C. Dennis, Assistant General Counsel, Entergy Nuclear Operations, Inc., 440 Hamilton Avenue, White Plains, NY 10601.

NRC Branch Chief: Mark G. Kowal.

Entergy Nuclear Operations, Inc., Docket Nos. 50–247 and 50–286, Indian Point Nuclear Generating Unit Nos. 2 and 3, Westchester County, New York

Date of amendment request: December 20, 2007.

Description of amendment request: The proposed amendment would modify Technical Specifications (TS), to replace the current limits on primary coolant gross specific activity with limits on primary coolant noble gas activity. The noble gas activity would be based on DOSE EQUIVALENT XE–133 and would take into account only the noble gas activity in the primary coolant.

This change was proposed by the industry's Technical Specification Task Force (TSTF) and is designated TSTF–490. The NRC staff issued a notice of opportunity for comment in the **Federal Register** on November 20, 2006 (71 FR 67170), on possible amendments concerning TSTF–490, including a model safety evaluation and model no significant hazards (NSHC) determination, using the consolidated line item improvement process (CLIIP). The NRC staff subsequently issued a notice of availability of the models for referencing in license amendment applications in the **Federal Register** on March 15, 2007 (72 FR 12217). The licensee affirmed the applicability of the following NSHC determination in its application dated December 20, 2007.

Basis for proposed no significant hazards consideration determination: As required by 10 CFR 50.91(a), an analysis of the issue of no significant hazards consideration is presented below:

Criterion 1—The Proposed Change Does Not Involve a Significant Increase in the Probability or Consequences of an Accident Previously Evaluated

Reactor coolant specific activity is not an initiator for any accident previously evaluated. The Completion Time when primary coolant gross activity is not within limit is not an initiator for any accident previously evaluated. The current variable limit on primary coolant iodine concentration is not an initiator to any accident previously evaluated. As a result, the proposed change does not significantly increase the probability of an accident. The proposed change will limit primary coolant noble gases to concentrations consistent with the accident analyses. The proposed change to the Completion Time has no impact on the consequences of any design basis accident since the consequences of an accident during the extended Completion Time are the same as the consequences of an accident during the Completion Time. As a result, the consequences of any accident previously evaluated are not significantly increased.

Criterion 2—The Proposed Change Does Not Create the Possibility of a New or Different Kind of Accident From Any Accident Previously Evaluated

The proposed change in specific activity limits does not alter any physical part of the plant nor does it affect any plant operating parameter. The change does not create the potential for a new or different kind of accident from any previously evaluated.

Criterion 3—The Proposed Change Does Not Involve a Significant Reduction in the Margin of Safety

The proposed change revises the limits on noble gas radioactivity in the primary coolant. The proposed change is consistent with the assumptions in the safety analyses and will ensure the monitored values protect the initial assumptions in the safety analyses.

The NRC staff has reviewed this analysis and, based on this review, it appears that the three standards of 10 CFR 50.92(c) are satisfied. Therefore, the NRC staff proposes to determine that the amendment request involves no significant hazards consideration.

Attorney for licensee: Mr. William C. Dennis, Assistant General Counsel, Entergy Nuclear Operations, Inc., 440 Hamilton Avenue, White Plains, NY 10601.

NRC Branch Chief: Mark G. Kowal.

Entergy Nuclear Operations, Inc., Docket No. 50–255, Palisades Plant, Van Buren County, Michigan

Date of amendment request: January 31, 2008.

Description of amendment request: The proposed amendment would revise the Technical Specifications (TS) to change the description of fuel assemblies specified in TS 4.2.1, and add the Framatome Advanced Nuclear Power, Inc. (ANP) report, BAW–10240(P)–A, ''Incorporation of M5 Properties in Framatome ANP Approved Methods,'' to the analytical methods referenced in TS 5.6.5.b to permit the use of M5 alloy for fuel rod cladding and fuel assembly structural components in future operating cycles.

Basis for proposed no significant hazards consideration determination: As required by 10 CFR 50.91(a), the licensee has provided its analysis of the issue of no significant hazards consideration, which is presented below:

1. Does the proposed amendment involve a significant increase in the probability or consequences of an accident previously evaluated?

Response: No.

The proposed license amendment adds a Nuclear Regulatory Commission approved analytical method, BAW–10240(P)–A, ''Incorporation of M5 Properties in Framatome ANP Approved Methods,'' used to determine the core operating limits, to Technical Specification (TS) 5.6.5.b and changes the description of fuel assemblies specified in TS 4.2.1 to allow use of the M5 alloy. The proposed amendment does not affect the acceptance criteria for any Final Safety Analysis Report (FSAR) safety analysis analyzed accidents and anticipated operational occurrences. As such, the proposed amendment does not increase the probability or consequences of an accident. The proposed amendment does not involve operation of the required structures, systems or components (SSCs) in a manner or configuration different from those previously recognized or evaluated.

Therefore, operation of the facility in accordance with the proposed amendment would not involve a significant increase in the probability or consequences of an accident previously evaluated.

2. Does the proposed amendment create the possibility of a new or different kind of accident from any accident previously evaluated?

Response: No.

Use of M5 clad fuel will not result in changes in the operation or configuration of the facility. Topical report BAW–10240(P)–A describes, by reference, that the material properties of the M5 alloy are similar or better than those of zircaloy-4. Therefore, M5 fuel rod cladding and fuel assembly structural components will perform similarly to those fabricated from zircaloy-4, thus precluding the possibility of the fuel becoming an accident initiator and causing a new or different type of accident.

Since the material properties of M5 alloy are similar or better than those of zircaloy-4, there will be no significant changes in the types of any effluents that may be released off-site. There will not be a significant increase in occupational or public radiation exposure.

The proposed amendment does not involve operation of any required SSCs in a manner or configuration different from those previously recognized or evaluated. No new failure mechanisms will be introduced by the changes being requested.

Therefore, the proposed amendment does not create the possibility of a new or different kind of accident from any accident previously evaluated.

3. Does the proposed amendment involve a significant reduction in a margin of safety?

Response: No.

The proposed change will not involve a significant reduction in the margin of safety because it has been demonstrated that the material properties of the M5 alloy are not significantly different from those of zircaloy-4. M5 alloy is expected to perform similarly or better than zircaloy-4 for all normal operating and accident scenarios, including both loss-of-coolant accident (LOCA) and non-LOCA scenarios. The proposed changes do not affect the acceptance criteria for any FSAR safety analysis analyzed accidents or anticipated operational occurrences. All required safety limits would continue to be analyzed using methodologies approved by the Nuclear Regulatory Commission.

Therefore, the proposed amendment would not involve a significant reduction in a margin of safety.

The NRC staff has reviewed the licensee's analysis and, based on this review, it appears that the three standards of 10 CFR 50.92(c) are satisfied. Therefore, the NRC staff proposes to determine that the amendment request involves no significant hazards consideration.

Attorney for licensee: Mr. William Dennis, Assistant General Counsel, Entergy Nuclear Operations, Inc., 440 Hamilton Ave., White Plains, NY 10601.

NRC Acting Branch Chief: Patrick D. Milano.

Pacific Gas and Electric Company, Docket Nos. 50–275 and 50–323, Diablo Canyon Nuclear Power Plant, Unit Nos. 1 and 2, San Luis Obispo County, California

Date of amendment request: February 1, 2008.

Description of amendment request: The proposed amendments would revise Technical Specification (TS) 5.5.16.a, ''Containment Leakage Rate Testing Program,'' to add an exception to Regulatory Guide 1.163 to allow the use of Standard ANSI/ANS 56.8–2002, and to revise TS 5.5.16.b to specify both a lower peak calculated containment internal pressure following a large-break loss-of-coolant accident (LOCA) and containment design pressure.

Basis for proposed no significant hazards consideration determination: As required by 10 CFR 50.91(a), the licensee has provided its analysis of the issue of no significant hazards consideration, which is presented below:

1. [Do] the proposed change[s] involve a significant increase in the probability or consequences of an accident previously evaluated?

Response: No.

The proposed change to TS 5.5.16.a adds an exception to Regulatory Guide 1.163 to specify use of Standard ANSI/ANS–56.8–2002, rather than ANSI/ANS–56.8–1994.

The proposed change to TS 5.5.16.b specifies both the peak calculated containment internal pressure with margin following a large-break LOCA and the containment design pressure.

These changes only affect the applicable version of the standard (2002 in place of 1994) and the test pressures for containment leak-rate tests, and do not involve the modification of any plant equipment or have any effect on plant operation. The changes are made based on the safety analysis and containment design, and do not have any adverse effect on accidents previously evaluated.

Therefore, the proposed changes do not involve a significant increase in the probability or consequences of an accident previously evaluated.

2. [Do] the proposed change[s] create the possibility of a new or different accident from any accident previously evaluated?

Response: No.

The proposed changes do not involve a physical alteration to the plant or a change in the methods governing normal plant operation. The changes are made based on the safety analysis and containment design, and do not affect any previously evaluated accidents.

Therefore, the proposed change[s] [do] not create the possibility of a new or different accident from any accident previously evaluated.

3. [Do] the proposed change[s] involve a significant reduction in a margin of safety?

Response: No.

The proposed changes do not alter the manner in which safety limits, limiting safety system settings, or limiting conditions for operation are determined. The safety analysis acceptance criteria are not affected by these changes, and the changes will not result in plant operation in a configuration outside the design basis.

Therefore, the proposed changes do not involve a significant reduction in a margin of safety.

The NRC staff has reviewed the licensee's analysis and, based on this review, it appears that the three standards of 10 CFR 50.92(c) are satisfied. Therefore, the NRC staff proposes to determine that the amendment request involves no significant hazards consideration.

Attorney for licensee: Jennifer Post, Esq., Pacific Gas and Electric Company, P.O. Box 7442, San Francisco, California 94120.

NRC Branch Chief: Thomas G. Hiltz.

Southern Nuclear Operating Company, Inc., Docket Nos. 50–424 and 50–425, Vogtle Electric Generating Plant, Units 1 and 2, Burke County, Georgia

Date of amendment request: February 29, 2008.

Description of amendment request: The proposed amendments would modify Technical Specification (TS) requirements related to control room envelope (CRE) habitability in accordance with the Nuclear Regulatory Commission (NRC)-approved Revision 3 of Technical Specification Task Force (TSTF) Standard Technical Specifications (STS) Change Traveler TSTF–448, ''Control Room Habitability.''

The NRC staff published a notice of opportunity for comment in the **Federal Register** on October 17, 2006 (71 FR 61075), on possible license amendments adopting TSTF–448 using the NRC's consolidated line-item improvement process (CLIIP) for amending licensees' TSs, which included a model safety evaluation (SE) and model no significant hazards consideration (NSHC) determination. The NRC staff subsequently issued a notice of availability of the models for referencing in license amendment applications in the **Federal Register** on January 17, 2007 (72 FR 2022), which included the resolution of public comments on the model SE and model NSHC determination. The licensee affirmed the applicability of the following NSHC determination in its application dated February 29, 2008.

Basis for proposed no significant hazards consideration determination: As required by 10 CFR 50.91(a), an analysis of the issue of no significant hazards consideration is presented below:

Criterion 1—The Proposed Change Does Not Involve a Significant Increase in the Probability or Consequences of an Accident Previously Evaluated

The proposed change does not adversely affect accident initiators or precursors nor alter the design assumptions, conditions, or configuration of the facility. The proposed change does not alter or prevent the ability of structures, systems, and components (SSCs) to perform their intended function to mitigate the consequences of an initiating event within the assumed acceptance limits. The proposed change revises the TS for the CRE emergency ventilation system, which is a mitigation system designed to minimize unfiltered air leakage into the CRE and to filter the CRE atmosphere to protect the CRE occupants in the event of accidents previously analyzed. An important part of the CRE emergency ventilation system is the CRE boundary. The CRE emergency ventilation system is not an initiator or precursor to any accident previously evaluated. Therefore, the probability of any accident previously evaluated is not increased. Performing tests to verify the operability of the CRE boundary and implementing a program to assess and maintain CRE habitability ensure that the CRE emergency ventilation system is capable of adequately mitigating radiological consequences to CRE occupants during accident conditions, and that the CRE emergency ventilation system will perform as assumed in the consequence analyses of design basis accidents. Thus, the consequences of any accident previously evaluated are not increased. Therefore, the proposed change does not involve a significant increase in the probability or consequences of an accident previously evaluated.

Criterion 2—The Proposed Change Does Not Create the Possibility of a New or Different Kind of Accident from any Accident Previously Evaluated

The proposed change does not impact the accident analysis. The proposed change does not alter the required mitigation capability of the CRE emergency ventilation system, or its functioning during accident conditions as assumed in the licensing basis analyses of design basis accident radiological consequences to CRE occupants. No new or different accidents result from performing the new surveillance or following the new program. The proposed change does not

involve a physical alteration of the plant (*i.e.*, no new or different type of equipment will be installed) or a significant change in the methods governing normal plant operation. The proposed change does not alter any safety analysis assumptions and is consistent with current plant operating practice. Therefore, this change does not create the possibility of a new or different kind of accident from any accident previously evaluated.

Criterion 3—The Proposed Change Does Not Involve a Significant Reduction in the Margin of Safety

The proposed change does not alter the manner in which safety limits, limiting safety system settings or limiting conditions for operation as determined. The proposed change does not affect safety analysis acceptance criteria. The proposed change will not result in plant operation in a configuration outside the design basis for an unacceptable period of time without compensatory measures. The proposed change does not adversely affect systems that respond to safely shut down the plant and to maintain the plant in a safe shutdown condition. Therefore, the proposed change does not involve a significant reduction in a margin of safety.

The NRC staff proposes to determine that the amendment request involves no significant hazards consideration.

Attorney for licensee: Mr. Arthur H. Domby, Troutman Sanders, NationsBank Plaza, Suite 5200, 600 Peachtree Street, NE., Atlanta, Georgia 30308–2216.

NRC Branch Chief: Melanie C. Wong.

STP Nuclear Operating Company, Docket Nos. 50–498 and 50–499, South Texas Project, Units 1 and 2, Matagorda County, Texas

Date of amendment request: January 28, 2008.

Description of amendment request: The amendments would revise the Technical Specifications (TS) to establish an Action in TS 3.3.1, ''Reactor Trip Instrumentation,'' for two inoperable channels of extended range neutron flux instrumentation. The licensee also proposes a minor correction to revise ACTION c of TS 3.4.1.4.2, ''Reactor Coolant System, Cold Shutdown—Loops Not Filled,'' to change the requirement for verification of boron concentration to verification of shutdown margin.

Basis for proposed no significant hazards consideration determination: As required by 10 CFR 50.91(a), the licensee has provided its analysis of the issue of no significant hazards consideration, which is presented below:

1. [Do] the proposed change[s] involve a significant increase in the probability or consequences of an accident previously evaluated?

Response: No.

The extended range neutron flux monitoring instrumentation that is the subject of the proposed change performs a monitoring function and of itself has no potential as an accident initiator. The proposed requirement for the condition where both channels of the function are inoperable establishes actions that preserve the design basis where no actions previously existed. This is a more restrictive change and thus does not increase the probability or consequences of an accident previously evaluated.

The proposed change[s] to TS 3.4.1.4.2 ACTION c. clarification regarding the verification of shutdown margin [do] not result in any technical change in the way the TS ACTION is applied. Therefore this proposed change does not increase the probability or consequences of an accident previously evaluated.

The proposed change[s] [include] formatting changes that are administrative and consequently have no effect on accident analyses.

Therefore, the proposed change[s] [do] not involve a significant increase in the probability or consequences of an accident previously evaluated.

2. [Do] the proposed change[s] create the possibility of a new or different kind of accident from any accident previously evaluated?

Response: No.

The proposed changes do not involve any physical alteration of plant equipment and [do] not change the method by which any safety related structure, system, or component performs its function or is tested. As such, no new or different types of equipment will be installed, and the basic operation of installed equipment is unchanged. The methods governing plant operation and testing remain consistent with current safety analysis assumptions.

The proposed change[s] [include] formatting changes that are administrative and consequently have no effect on accident analyses.

Therefore, the proposed change[s] will not create the possibility of a new or different kind of accident from any accident previously evaluated.

3. [Do] the proposed change[s] involve a significant reduction in a margin of safety?

Response: No.

The proposed changes do not negate any existing requirement, and d[o] not adversely affect existing plant safety margins or the reliability of the equipment assumed to operate in the safety analysis. The purpose of the proposed changes is to provide greater assurance that the design basis is maintained. There are no changes being made to safety analysis assumptions, safety limits or safety system settings that would adversely affect plant safety as a result of the proposed change[s].

The proposed change[s] [include] formatting changes that are administrative and consequently have no effect on accident analyses.

Therefore, the proposed change[s] [do] not involve a significant reduction in a margin of safety.

The NRC staff has reviewed the licensee's analysis and, based on this review, it appears that the standards of 10 CFR 50.92(c) are satisfied. Therefore, the NRC staff proposes to determine that the request for amendments involves no significant hazards consideration.

Attorney for licensee: A. H. Gutterman, Esq., Morgan, Lewis & Bockius, 1111 Pennsylvania Avenue, NW., Washington, DC 20004.

NRC Branch Chief: Thomas G. Hiltz.

STP Nuclear Operating Company, Docket Nos. 50–498 and 50–499, South Texas Project, Units 1 and 2, Matagorda County, Texas

Date of amendment request: January 23, 2008.

Description of amendment request: The amendments would revise the Technical Specification (TS) 3.6.1.3 Actions to (1) allow entry and exit through the containment air lock doors, even if the applicable action requires the containment air lock door to be closed, and (2) expand the current guidance provided to address inoperable air lock components.

Basis for proposed no significant hazards consideration determination: As required by 10 CFR 50.91(a), the licensee has provided its analysis of the issue of no significant hazards consideration, which is presented below:

1. [Do] the proposed change[s] involve a significant increase in the probability or consequences of an accident previously evaluated?

Response: No.

The proposed Technical Specification changes to revise the action requirements associated with the containment air lock will not cause an accident to occur and will not result in any change in the operation of the associated accident mitigation equipment. The containment air lock is not an accident initiator. The proposed changes will not revise the operability requirements (e.g., leakage limits) for the containment air lock. Proper operation of the containment air lock will still be verified. As a result, the design basis accidents will remain the same postulated events described in the South Texas Project Unit 1 and Unit 2 Updated Final Safety Analysis Report, and the consequences of the design basis accidents will remain the same.

Therefore, the proposed changes will not increase the probability or consequences of an accident previously evaluated.

2. [Do] the proposed change[s] create the possibility of a new or different kind of accident from any accident previously evaluated?

Response: No.

The proposed changes to the Technical Specifications do not impact any system or component that could cause an accident. The proposed changes will not alter the plant configuration (no new or different type of

equipment will be installed) or require any unusual operator actions. The proposed changes will not alter the way any structure, system, or component functions, and will not significantly alter the manner in which the plant is operated. The response of the plant and the operators following an accident will not be different. In addition, the proposed changes do not introduce any new failure modes.

Therefore, the proposed changes will not create the possibility of a new or different kind of accident from any accident previously analyzed.

3. [Do] the proposed change[s] involve a significant reduction in a margin of safety?

Response: No.

The proposed Technical Specification changes to revise the action requirements associated with the containment air lock will not cause an accident to occur and will not result in any change in the operation of the associated accident mitigation equipment. The operability requirements for the containment air lock have not been changed. The containment air lock will continue to function as assumed in the safety analysis. In addition, the proposed changes will not adversely affect equipment design or operation, and there are no changes being made to the Technical Specification required safety limits or safety system settings that would adversely affect plant safety.

Therefore, the proposed changes will not result in a reduction in a margin of safety.

The NRC staff has reviewed the licensee's analysis and, based on this review, it appears that the standards of 10 CFR 50.92(c) are satisfied. Therefore, the NRC staff proposes to determine that the request for amendments involves no significant hazards consideration.

Attorney for licensee: A. H. Gutterman, Esq., Morgan, Lewis & Bockius, 1111 Pennsylvania Avenue, NW., Washington, DC 20004.

NRC Branch Chief: Thomas G. Hiltz

Union Electric Company, Docket No. 50–483, Callaway Plant, Unit 1, Callaway County, Missouri

Date of amendment request: December 28, 2007.

Description of amendment request: The proposed amendment would revise Technical Specification Administrative Controls Section 5.5.8, ''Inservice Testing Program,'' to indicate that the Inservice Testing Program shall include testing frequencies applicable to the American Society of Mechanical Engineers (ASME) Code for Operation and Maintenance, and to indicate that there may be some non-standard frequencies specified as 2 years or less in the Inservice Testing Program to which the provisions of Surveillance Requirement 3.0.2 is applicable.

Basis for proposed no significant hazards consideration determination: As required by 10 CFR 50.91(a), the licensee has provided its analysis of the issue of no significant hazards consideration, which is presented below:

1. Does the proposed amendment involve a significant increase in the probability or consequences of an accident previously evaluated?

Response: No.

The proposed change revises TS 5.5.8, ''Inservice Testing Program,'' for consistency with the requirements of 10 CFR 50.55a(f)(4) regarding the inservice testing of pumps and valves. The proposed change incorporates revisions to the ASME Code that result in a net improvement in the measures for testing pumps and valves. The proposed change does not impact any accident initiators or analyzed events or assumed mitigation of accident or transient events, nor does it involve the addition or removal of any equipment, or any design changes to the facility. Therefore, the proposed change does not represent a significant increase in the probability or consequences of an accident previously evaluated.

2. Does the proposed amendment create the possibility of a new or different kind of accident from any accident previously evaluated?

Response: No

The proposed change revises TS 5.5.8, ''Inservice Testing Program,'' for consistency with the requirements of 10 CFR 50.55a(f)(4) regarding the inservice testing of pumps and valves. The proposed change incorporates revisions to the ASME Code that result in a net improvement in the measures for testing pumps and valves.

The proposed change does not involve a modification to the physical configuration of the plant (i.e., no new equipment will be installed) or change in the methods governing normal plant operation. The proposed change will not impose any new or different requirements or introduce a new accident initiator, accident precursor, or malfunction mechanism. Additionally, there is no change in the types or increases in the amounts of any effluent that may be released off-site, and there is no increase in individual or cumulative occupational exposure. Therefore, this proposed change does not create the possibility of an accident of a different kind than previously evaluated.

3. Does the proposed amendment involve a significant reduction in a margin of safety?

Response: No

The proposed change revises TS 5.5.8, ''Inservice Testing Program, '' for consistency with the requirements of 10 CFR 50.55a(f)(4) regarding the inservice testing of pumps and valves. The proposed change incorporates revisions to the ASME Code that result in a net improvement in the measures for testing pumps and valves. The safety functions of the affected pumps and valves will be maintained. Therefore, this proposed change does not involve a significant reduction in a margin of safety.

The NRC staff has reviewed the licensee's analysis and, based on this review, it appears that the three standards of 10 CFR 50.92(c) are satisfied. Therefore, the NRC staff proposes to determine that the amendment request involves no significant hazards consideration.

Attorney for licensee: John O'Neill, Esq., Pillsbury Winthrop Shaw Pittman LLP, 2300 N Street, NW., Washington, DC 20037.

NRC Branch Chief: Thomas G. Hiltz.

Union Electric Company, Docket No. 50–483, Callaway Plant, Unit 1, Callaway County, Missouri

Date of amendment request: December 28, 2007.

Description of amendment request: The amendment would revise Technical Specifications (TS) 3.7.2, to add the Main steam isolation valve (MSIV) bypass valves to the scope of the TS. The proposed changes include a revision to the APPLICABILITY for the TS and a revision to footnote (i) in Table 3.3.2–1 of TS 3.3.2, ''ESFAS Instrumentation,'' to make it consistent with the revised Applicability of LCO 3.7.2. The amendment would also add new TS 3.7.19, ''Secondary System Isolation Valves (SSIVs),'' to include Limiting Conditions for Operation and Surveillance Requirements for the secondary system isolation valves: Main steam low point drain isolation valves, steam generator chemical injection isolation valves, steam generator blowdown isolation valves, and steam generator sample line isolation valves.

Basis for proposed no significant hazards consideration determination: As required by 10 CFR 50.91(a), the licensee has provided its analysis of the issue of no significant hazards consideration, which is presented below:

1. Does the proposed amendment involve a significant increase in the probability or consequences of an accident previously evaluated?

Response: No.

The proposed change adds requirements to the TS to ensure that systems and components are maintained consistent with the safety analysis and licensing basis.

Requirements are incorporated into the TS for secondary system isolation valves. These changes do not involve any design or physical changes to the facility, including the SSIVs themselves. The design and functional performance requirements, operational characteristics, and reliability of the SSIVs are unchanged. There is no impact on the design safety function of MSIVs, MFIVs, MFRVs or MFRVBVs [main steam isolation valves, main feedwater isolation valves, main feedwater regulating valves, main isolation feedwater regulating valve bypass valves] to close (either as an accident mitigator or as a potential transient initiator). Since no failure mode or initiating condition that could cause an accident (including any plant transient) evaluated per the FSAR [final safety analysis report]-described safety analyses is created or

affected, the change cannot involve a significant increase in the probability of an accident previously evaluated.

With regard to the consequences of an accident and the equipment required for mitigation of the accident, the proposed changes involve no design or physical changes to components in the main steam supply system or feedwater system. There is no impact on the design safety function of MSIVs, MFIVs, MFRVs, or MFRVBVs or any other equipment required for accident mitigation. Adequate equipment availability would continue to be required by the TS. The consequences of applicable, analyzed accidents (such as a main steam line break of feedline break) are not impacted by the proposed changes.

The change in APPLICABILITY for the MSIVs is consistent with the Westinghouse Standard Technical Specification 3.7.2. The change to footnote (i) in TS Table 3.3.2–1 makes the provisions of that note for the affected instrumentation consistent with the revised APPLICABILITY of TS 3.7.2. These changes involve no physical changes to the facility and do not adversely affect the availability of the safety functions assumed for the MSIVs and SSIVs. Therefore, they do not involve a significant increase in the probability or consequences of an accident previously evaluated. Based on the above considerations, the proposed changes do not involve a significant increase in the probability or consequences of an accident previously evaluated.

2. Does the proposed amendment create the possibility of a new or different kind of accident from any accident previously evaluated?

Response: No.

The proposed changes add requirements to the TS that support or ensure the availability of the safety functions assumed or required for the MSIVs and SSIVs. The changes do not involve a physical alteration of the plant (no new or different type of equipment will be installed) or changes in controlling parameters. Additional requirements are being imposed, but they are consistent with the assumptions made in the safety analysis and licensing basis. The addition of Conditions, Required Actions and Completion Times to TS for the SSIVs does not involve a change in the design, configuration, or operational characteristics of the plant. Further, the proposed changes do not involve any changes in plant procedures for ensuring that the plant is operated within analyzed limits. As such, no new failure modes or mechanisms that could cause a new or different kind of accident from any previously evaluated are introduced.

Therefore, the proposed changes do not create the possibility of a new or different kind of accident from any accident previously evaluated.

3. Does the proposed amendment involve a significant reduction in a margin of safety?

Response: No.

The proposed addition of Conditions, Required Actions and Completion Times for SSIVs, as well as the proposed change to the APPLICABILITY for the MSIV TS (and the corresponding change to the footnote for the ESFAS Instrumentation in TS 3.3.2) does not alter the manner in which safety limits or limiting safety system settings are determined. No changes to instrument/system actuation setpoints are involved. The safety analysis acceptance criteria are not impacted and the proposed change will not permit plant operation in a configuration outside the design basis. The changes are consistent with the safety analysis and licensing basis for the facility.

Therefore, the proposed changes do not involve a significant reduction in a margin of safety.

The NRC staff has reviewed the licensee's analysis and, based on this review, it appears that the three standards of 10 CFR 50.92(c) are satisfied. Therefore, the NRC staff proposes to determine that the amendment request involves no significant hazards consideration.

Attorney for licensee: John O'Neill, Esq., Pillsbury Winthrop Shaw Pittman LLP, 2300 N Street, NW., Washington, DC 20037.

NRC Branch Chief: Thomas G. Hiltz.

Union Electric Company, Docket No. 50–483, Callaway Plant, Unit 1, Callaway County, Missouri

Date of amendment request: December 28, 2007.

Description of amendment request: The amendment would incorporate changes in the Technical Specifications (TS). Specifically, a footnote associated with Table 3.3.2–1 of Technical Specification 3.3.2, ''Engineered Safety Feature Actuation System (ESFAS) Instrumentation,'' would be revised to make the exception allowed by the footnote consistent with the scope and Applicability of TS 3.7.3, ''Main Feedwater Isolation Valves (MFIVs) and Main Feedwater Regulating Valves (MFRVs) and Main Feedwater Regulating Valve Bypass Valves (MFRVBVs)'' and a Note connected with each of two Surveillance Requirements (SRs), i.e., SR 3.7.2.1 and SR 3.7.2.2 under TS 3.7.2, ''Main Steam Isolation Valves (MSIVs),'' would be deleted as it is no longer needed or appropriate for the affected SRs.

Basis for proposed no significant hazards consideration determination: As required by 10 CFR 50.91(a), the licensee has provided its analysis of the issue of no significant hazards consideration, which is presented below:

1. Does the proposed change involve a significant increase in the probability or consequences of an accident previously evaluated?

Response: No

Overall protection system performance will remain within the bounds of the previously performed accident analyses since there are no design changes. All design, material, and construction standards that were applicable prior to this amendment request will be maintained. There will be no changes to any design or operating limits.

The proposed changes will not change accident initiators or precursors assumed or postulated in the final safety analysis report (FSAR)-described accident analyses, nor will they alter the design assumptions, conditions, and configuration of the facility or the manner in which the plant is operated and maintained. The proposed changes will not alter or prevent the ability of structures, systems, and components (SSCs) from performing their intended functions to mitigate the consequences of an initiating event within the assumed acceptance limits.

The proposed changes do not physically alter safety-related systems, nor do they affect the way in which safety-related systems perform their functions.

All accident analysis acceptance criteria will continue to be met with the proposed changes. The proposed changes will not affect the source term, containment isolation, or radiological release assumptions used in evaluating the radiological consequences of an accident previously evaluated. The proposed changes will not alter any assumptions or change any mitigation actions in the radiological consequence evaluations in the FSAR. The applicable radiological dose acceptance criteria will continue to be met.

Therefore, the proposed changes do not involve a significant increase in the probability or consequences of an accident previously evaluated.

2. Does the proposed change create the possibility of a new or different kind of accident from any accident previously evaluated?

Response: No

There are no proposed design changes, nor are there any changes in the method by which any safety-related plant structure, system, or component (SSC) performs its specified safety function. The proposed changes will not affect the normal method of plant operation or change any operating parameters. No equipment performance requirements will be affected. The proposed changes will not alter any assumptions made in the safety analyses.

No new accident scenarios, transient precursors, failure mechanisms, or limiting single failures will be introduced as a result of this amendment. There will be no adverse effect or challenges imposed on any safety-related system as a result of this amendment.

The proposed amendment will not alter the design or performance of the 7300 Process Protection System, Nuclear Instrumentation System, or Solid State Protection System used in the plant protection systems.

Therefore, the proposed changes do not create the possibility of a new or different accident from any accident previously evaluated.

3. Does the proposed change involve a significant reduction in a margin of safety?

Response: No

There will be no effect on those plant systems necessary to assure the accomplishment of protection functions.

There will be no impact on the overpower limit, departure from nucleate boiling ratio (DNBR) limits, heat flux hot channel factor (FQ), nuclear enthalpy rise hot channel factor (FAH), loss of coolant accident peak cladding temperature (LOCA PCT), peak local power density, or any other margin of safety. The applicable radiological dose consequence acceptance criteria for design-basis transients and accidents will continue to be met.

The proposed changes do not eliminate any surveillance or alter the frequency of surveillances required by the Technical Specifications. None of the acceptance criteria for any accident analysis will be changed.

Therefore, the proposed changes do not involve a significant reduction in a margin of safety.

The NRC staff has reviewed the licensee's analysis and, based on this review, it appears that the three standards of 10 CFR 50.92(c) are satisfied. Therefore, the NRC staff proposes to determine that the amendment request involves no significant hazards consideration.

Attorney for licensee: John O'Neill, Esq., Pillsbury Winthrop Shaw Pittman LLP, 2300 N Street, NW., Washington, DC 20037.

NRC Branch Chief: Thomas G. Hiltz.

Union Electric Company, Docket No. 50–483, Callaway Plant, Unit 1, Callaway County, Missouri

Date of amendment request: November 29, 2007.

Description of amendment request: The proposed amendment would revise Technical Specification (TS) 3.4.10, ''Pressurizer Safety Valves,'' and TS 3.4.11, ''Pressurizer Power Operated Relief Valves (PORVs),'' to modify the completion times for default conditions in both TSs and to allow separate condition entry for PORV block valves in TS 3.4.11. The amendment request is adopting the following two Nuclear Regulatory Commission (NRC)-approved TS Task Force (TSTF) travelers to the standard TSs: TSTF–247–A and TSTF–352–A.

Basis for proposed no significant hazards consideration determination: As required by 10 CFR 50.91(a), the licensee has provided its analysis of the issue of no significant hazards consideration, which is presented below:

1. [Do] the proposed change[s] involve a significant increase in the probability or consequences of an accident previously evaluated?

Response: No.

Overall protection system performance will remain within the bounds of the previously performed accident analyses since there are no design changes. All design, material, and construction standards that were applicable prior to this amendment request will be maintained. There will be no changes to the design and operating temperature and pressure limits placed on the reactor coolant system.

The proposed changes will not adversely affect accident initiators or precursors nor alter the design assumptions, conditions, and configuration of the facility or the manner in which the plant is operated and maintained. The proposed changes will not alter or prevent the ability of structures, systems, and components (SSCs) from performing their intended functions to mitigate the consequences of an initiating event within the assumed acceptance limits.

The proposed changes do not physically alter safety-related systems nor affect the way in which safety-related systems perform their functions.

All accident analysis acceptance criteria will continue to be met with the proposed changes. The proposed changes will not affect the source term, containment isolation, or radiological release assumptions used in evaluating the radiological consequences of an accident previously evaluated. The proposed changes will not alter any assumptions or change any mitigation actions in the radiological consequence evaluations in the FSAR [Final Safety Analysis Report for the plant]. The applicable radiological dose acceptance criteria will continue to be met.

Therefore, the proposed changes do not involve a significant increase in the probability or consequences of an accident previously evaluated.

2. [Do] the proposed change[s] create the possibility of a new or different kind of accident from any accident previously evaluated?

Response: No.

There are no proposed design changes nor are there any changes in the method by which any safety-related plant SSC performs its safety function. The proposed changes will not affect the normal method of plant operation or change any operating parameters. No equipment performance requirements will be affected. The proposed changes will not alter any assumptions made in the safety analyses.

No new accident scenarios, transient precursors, failure mechanisms, or limiting single failures will be introduced as a result of this amendment. There will be no adverse effect or challenges imposed on any safety-related system as a result of this amendment.

The proposed amendment will not alter the design or performance of the 7300 Process Protection System, Nuclear Instrumentation System, or Solid State Protection System used in the plant protection systems.

Therefore, the proposed changes do not create the possibility of a new or different accident from any accident previously evaluated.

3. [Do] the proposed change[s] involve a significant reduction in a margin of safety?

Response: No.

There will be no effect on those plant systems necessary to assure the accomplishment of protection functions. There will be no impact on the overpower limit, departure from nucleate boiling ratio (DNBR) limits, heat flux hot channel factor (FQ), nuclear enthalpy rise hot channel factor (FΔH), loss of coolant accident peak cladding temperature (LOCA PCT), peak local power density, or any other margin of safety. The applicable radiological dose consequence acceptance criteria will continue to be met. The proposed changes do not eliminate any surveillances or alter the frequency of surveillances required by the Technical Specifications. None of the acceptance criteria for any accident analysis will be changed.

The proposed changes will have no impact on the radiological consequences of a design basis accident.

Therefore, the proposed changes do not involve a significant reduction in a margin of safety.

The NRC staff has reviewed the licensee's analysis and, based on this review, it appears that the three standards of 10 CFR 50.92(c) are satisfied. Therefore, the NRC staff proposes to determine that the amendment request involves no significant hazards consideration.

Attorney for licensee: John O'Neill, Esq., Pillsbury Winthrop Shaw Pittman LLP, 2300 N Street, NW., Washington, DC 20037.

NRC Branch Chief: Thomas G. Hiltz.

Previously Published Notices of Consideration of Issuance of Amendments to Facility Operating Licenses, Proposed No Significant Hazards Consideration Determination, and Opportunity for a Hearing

The following notices were previously published as separate individual notices. The notice content was the same as above. They were published as individual notices either because time did not allow the Commission to wait for this biweekly notice or because the action involved exigent circumstances. They are repeated here because the biweekly notice lists all amendments issued or proposed to be issued involving no significant hazards consideration.

For details, see the individual notice in the **Federal Register** on the day and page cited. This notice does not extend the notice period of the original notice.

Southern Nuclear Operating Company, Inc., Docket Nos. 50–424 and 50–425, Vogtle Electric Generating Plant, Units 1 and 2, Burke County, Georgia

Date of amendment request: February 13, 2008.

Brief description of amendment request: The amendments propose a one time steam generator (SG) tubing eddy current inspection interval revision to the Vogtle Electric Generating Plant, Units 1 and 2 (Vogtle 1 and 2) Technical Specifications (TSs) 5.5.9, ''Steam Generator (SG) Program,'' to incorporate an interim alternate repair criterion

(ARC) in the provisions for SG tube repair criteria during the Vogtle 1 inspection performed in refueling outage 14 and subsequent operating cycle, and during the Vogtle 2 inspection performed in refueling outage 13 and subsequent 18-month SG tubing eddy current inspection interval and subsequent 36-month SG tubing eddy current inspection interval. The amendments also revise TS 5.6.10, ''Steam Generator Tube Inspection Report,'' where three new reporting requirements are proposed to be added to the existing seven requirements.

Date of publication of individual notice in ***Federal Register:*** February 26, 2008 (73 FR 10305).

Expiration date of individual notice: April 28, 2008.

Notice of Issuance of Amendments to Facility Operating Licenses

During the period since publication of the last biweekly notice, the Commission has issued the following amendments. The Commission has determined for each of these amendments that the application complies with the standards and requirements of the Atomic Energy Act of 1954, as amended (the Act), and the Commission's rules and regulations. The Commission has made appropriate findings as required by the Act and the Commission's rules and regulations in 10 CFR Chapter I, which are set forth in the license amendment.

Notice of Consideration of Issuance of Amendment to Facility Operating License, Proposed No Significant Hazards Consideration Determination, and Opportunity for A Hearing in connection with these actions was published in the **Federal Register** as indicated.

Unless otherwise indicated, the Commission has determined that these amendments satisfy the criteria for categorical exclusion in accordance with 10 CFR 51.22. Therefore, pursuant to 10 CFR 51.22(b), no environmental impact statement or environmental assessment need be prepared for these amendments. If the Commission has prepared an environmental assessment under the special circumstances provision in 10 CFR 51.22(b) and has made a determination based on that assessment, it is so indicated.

For further details with respect to the action see (1) The applications for amendment, (2) the amendment, and (3) the Commission's related letter, Safety Evaluation and/or Environmental Assessment as indicated. All of these items are available for public inspection at the Commission's Public Document Room (PDR), located at One White Flint North, Public File Area 01F21, 11555 Rockville Pike (first floor), Rockville, Maryland. Publicly available records will be accessible from the Agencywide Documents Access and Management Systems (ADAMS) Public Electronic Reading Room on the internet at the NRC Web site, *http://www.nrc.gov/reading-rm/adams.html.* If you do not have access to ADAMS or if there are problems in accessing the documents located in ADAMS, contact the PDR Reference staff at: 1 (800) 397–4209, (301) 415–4737 or by e-mail to *pdr@nrc.gov.*

Entergy Gulf States Louisiana, LLC, and Entergy Operations, Inc., Docket No. 50–458, River Bend Station, Unit 1, West Feliciana Parish, Louisiana

Date of amendment request: March 28, 2007, as supplemented by letter dated October 24, 2007.

Brief description of amendment: The amendment revised the required wattage specified in the River Bend Station, Unit 1, Technical Specification 5.5.7.e, Ventilation Filter Testing Program, for the Control Room Fresh Air System (CRFAS) heater for testing. The required wattage for testing the CRFAS heater was revised from 23 ± 2.3 kilowatt (kW) to ''≥=15 kW.''

Date of issuance: February 28, 2008

Effective date: As of the date of issuance and shall be implemented within 60 days from the date of issuance.

Amendment No.: 159

Facility Operating License No. NPF–47: The amendment revised the Facility Operating License and Technical Specifications.

Date of initial notice in ***Federal Register***: May 8, 2007 (72 FR 26175). The supplement dated October 24, 2007, provided additional information that clarified the application, did not expand the scope of the application as originally noticed, and did not change the staff's original proposed no significant hazards consideration determination as published in the **Federal Register** on May 8, 2007 (72 FR 26175).

The Commission's related evaluation of the amendment is contained in a Safety Evaluation dated February 28, 2008.

No significant hazards consideration comments received: No.

Entergy Operations, Inc., Docket No. 50–368, Arkansas Nuclear One, Unit No. 2, Pope County, Arkansas

Date of application for amendment: August 30, 2007, as supplemented by letter dated December 5, 2007.

Brief description of amendment: The amendment revised Technical Specification 3.1.3.4, ''Reactivity Control Systems CEA [Control Element Assembly] Drop Time,'' to change the individual rod drop time from the fully withdrawn position to 90 percent insertion from less than or equal to 3.5 seconds to less than or equal to 3.7 seconds.

Date of issuance: March 5, 2008.

Effective date: As of its date of issuance and shall be implemented prior to startup following the spring 2008 refueling outage.

Amendment No.: 275.

Renewed Facility Operating License No. NPF–6: The amendment revised the Technical Specifications and license.

Date of initial notice in ***Federal Register***: October 9, 2007 (72 FR 57354). The supplemental letter dated December 5, 2007, provided additional information that clarified the application, did not expand the scope of the application as originally noticed, and did not change the staff's original proposed no significant hazards consideration determination as published in the **Federal Register**.

The Commission's related evaluation of the amendment is contained in a Safety Evaluation dated March 5, 2008.

No significant hazards consideration comments received: No.

Entergy Nuclear Operations, Inc., Docket No. 50–255, Palisades Plant, Van Buren County, Michigan

Date of application for amendment: March 15, 2007.

Brief description of amendment: The amendment changes Technical Specification (TS) Section 1.4 and Section 5. Changes to TS 1.4 incorporate Nuclear Regulatory Commission (NRC)-approved Technical Specification Task Force (TSTF) Standard Technical Specification Changes TSTF–284, ''Add 'Met vs. Perform' to Specification 1.4, Frequency,'' Revision 3, TSTF–485–A, ''Correction Example 1.4–1,'' Revision 0, and make administrative changes. Changes to TS Section 5 incorporate NRC-approved TSTF–258, ''Changes to Section 5.0, Administrative Controls,'' Revision 4, NRC-approved TSTF–273, ''[Safety Functions Determination Program] SFDP Clarifications,'' Revision 2, as amended by Westinghouse Owners Group (WOG) editorial change WOG–ED–23, and make administrative changes.

Date of issuance: March 5, 2008.

Effective date: As of the date of issuance and shall be implemented within 60 days.

Amendment No.: 231

Facility Operating License No. DPR–20: Amendment revised the Technical Specifications and Renewed License.

*Date of initial notice in **Federal Register:*** June 19, 2007 (72 FR 33782).

The Commission's related evaluation of the amendment is contained in a Safety Evaluation dated March 5, 2008.

No significant hazards consideration comments received: No.

Exelon Generation Company, LLC, Docket Nos. 50–373 and 50–374, LaSalle County Station, Units 1 and 2, LaSalle County, Illinois

Date of application for amendments: June 18, 2007.

Brief description of amendments: The amendment revised Technical Specification 3.7.5, ''Control Room Area Ventilation Air Conditioning (AC) System,'' to add an Action Statement for two inoperable control room area ventilation AC subsystems. This operating license improvement was made available by the Nuclear Regulatory Commission on March 26, 2007 (72 FR 14143) as part of the consolidated line item improvement process.

Date of issuance: March 10, 2008

Effective date: As of the date of issuance and shall be implemented within 60 days.

Amendment Nos.: 188/175

Facility Operating License Nos. NPF–11 and NPF–18: The amendments revised the Technical Specifications and License.

*Date of initial notice in **Federal Register:*** September 1, 2007 (72 FR 51860). The Commission's related evaluation of the amendments is contained in a Safety Evaluation dated March 10, 2008.

No significant hazards consideration comments received: No.

Exelon Generation Company, LLC, and PSEG Nuclear LLC, Docket Nos. 50–277 and 50–278, Peach Bottom Atomic Power Station, Unit Nos. 2 and 3, York and Lancaster Counties, Pennsylvania

Date of amendment request: November 17, 2006, as supplemented by letters dated September 21, 2007, December 21, 2007, February 1, 2008, and February 14, 2008.

Brief description of amendment: The amendment revises Technical Specification Surveillance Requirement 3.3.1.1.8 to increase the frequency interval between Local Power Range Monitor (LPRM) calibrations from 1000 megawatt days per ton (MWD/T) average core exposure to 2000 MWD/T average core exposure. The LPRM system provides signals to associated nuclear instrumentation systems that serve to detect conditions in the core that have the potential to threaten the overall integrity of the fuel barrier. The LPRM system also incorporates features designed to diagnose and display various system trip and inoperative conditions.

Date of issuance: February 29, 2008.

Effective date: As of the date of issuance and shall be implemented within 60 days from the date of issuance.

Amendment Nos.: 266 and 270

Facility Operating License Nos. DPR–44 and DPR–56: Amendment revised the License and Technical Specifications.

*Date of initial notice in **Federal Register:*** August 28, 2007 (72 FR 49577). The Commission's related evaluation of the amendment is contained in a Safety Evaluation dated February 29, 2008.

No significant hazards consideration comments received: No.

FPL Energy, Point Beach, LLC, Docket Nos. 50–266 and 50–301, Point Beach Nuclear Plant, Units 1 and 2, Town of Two Creeks, Manitowoc County, Wisconsin

Date of application for amendments: October 12, 2007, as supplemented by letters dated December 12, and December 21, 2007.

Brief description of amendments: The amendments revises Technical Specification 5.5.15 ''Containment Leakage Rate Testing Program,'' for Units 1 and 2. The proposed change allows a one-time interval extension of no more than 5 years for the Type A, Integrated Leakage Rate Test.

Date of issuance: February 26, 2008

Effective date: As of the date of issuance and shall be implemented within 30 days.

Amendment Nos.: 232, 237

Renewed Facility Operating License Nos. DPR–24 and DPR–27: Amendments revised the Technical Specifications/License.

*Date of initial notice in **Federal Register:*** December 4, 2007 (72 FR 68217). The supplements contained clarifying information and did not change the staff's initial proposed finding of no significant hazards consideration.

The Commission's related evaluation of the amendments is contained in a Safety Evaluation dated February 26, 2008.

No significant hazards consideration comments received: No.

Indiana Michigan Power Company, Docket Nos. 50–315, Donald C. Cook Nuclear Plant, Units 1 and 2 (DCCNP–1 and DCCNP–2), Berrien County, Michigan

Date of application for amendments: September 15, 2006

Brief description of amendments: The amendments revised Action Q of Technical Specifications Section 3.3.1, ''Reactor Trip System (RTS) Instrumentation,'' to reflect deletion of the power range neutron flux high negative rate trip function previously approved by Amendment Nos. 293 (for Unit 1) and 275 (for Unit 2).

Date of issuance: March 5, 2008

Effective date: As of the date of issuance, and shall be implemented within 30 days.

Amendment No.: 302 (for DCCNP–1) and 285 (for DCCNP–2)

Facility Operating License Nos. DPR–58 and DPR–74: Amendments revised the Renewed Operating Licenses and Technical Specifications.

*Date of initial notice in **Federal Register***: November 21, 2006 (71 FR 67396).

The Commission's related evaluation of the amendment is contained in a safety evaluation dated March 5, 2008.

No significant hazards consideration comments received: No.

Luminant Generation Company LLC, Docket Nos. 50–445 and 50–446, Comanche Peak Steam Electric Station, Unit Nos. 1 and 2, Somervell County, Texas

Date of amendment request: May 22, 2007, as supplemented by letter dated December 5, 2007.

Brief description of amendments: The amendments revised the Technical Requirements Surveillance 13.3.33.2, Cycling Frequency for the Turbine Stop and Control Valves. The change will increase the valve cycle frequency interval from 12 to 26 weeks.

Date of issuance: February 29, 2008.

Effective date: As of the date of issuance and shall be implemented within 120 days from the date of issuance.

Amendment Nos.: Unit 1–143; Unit 2–143

Facility Operating License Nos. NPF–87 and NPF–89: The amendments revised the Facility Operating Licenses and Technical Specifications.

*Date of initial notice in **Federal Register:*** August 14, 2007 (72 FR 45462). The supplement dated December 5, 2007, provided additional information that clarified the application, did not expand the scope of the application as originally noticed, and did not change the staff's original proposed no significant hazards consideration determination as published in the **Federal Register** on August 14, 2007 (72 FR 45462).

The Commission's related evaluation of the amendments is contained in a Safety Evaluation dated February 29, 2008.

No significant hazards consideration comments received: No.

Nine Mile Point Nuclear Station, LLC, Docket No. 50–410, Nine Mile Point Nuclear Station, Unit No. 2, Oswego County, New York

Date of application for amendment: March 30, 2007, as supplemented by letters dated October 16, 2007, and November 2, 2007.

Brief description of amendment: The amendment changes the NMP2 Technical Specifications to reflect an expanded operating domain resulting from implementation of Average Power Range Monitor/Rod Block Monitor/ Technical Specifications/Maximum Extended Load Line Analysis (ARTS/ MELLLA). The Average Power Range Monitor (APRM) flow-biased simulated thermal power allowable value (AV) would be revised to permit operation in the MELLLA region. The current flow-biased Rod Block Monitor (RBM) would be replaced by a power dependent RBM, which also would require new AVs. The flow-biased APRM simulated thermal power setdown requirement would be replaced by more direct power and flow dependent thermal limits administration. The Surveillance Requirement for the standby liquid control (SLC) system would be revised to require each SLC pump to deliver required flow at a discharge pressure ≥1325 psig in lieu of ≥1320 psig; the SLC relief valve setpoint would be increased from 1394 psig to 1400 psig. Finally, the proposed amendment employs a new model for performing the anticipated transients without scram analysis for ARTS/MELLLA conditions.

Date of issuance: February 27, 2008

Effective date: As of the date of issuance to be implemented within 60 days.

Amendment No.: 123

Renewed Facility Operating License No. NPF–69: Amendment revises the License and Technical Specifications.

Date of initial notice in ***Federal Register:*** May 22, 2007 (72 FR 28721). The supplements dated October 16, 2007, and November 2, 2007, provided additional information that clarified the application, did not expand the scope of the application as originally noticed, and did not change the Nuclear Regulatory Commission staff's initial proposed no significant hazards consideration determination.

The Commission's related evaluation of the amendment is contained in a Safety Evaluation dated February 27, 2008.

No significant hazards consideration comments received: No

Nuclear Management Company, LLC, Docket No. 50–263, Monticello Nuclear Generating Plant, Wright County, Minnesota

Date of application for amendment: January 30, 2007, as supplemented by letter dated December 28, 2007.

Brief description of amendment: The amendment revised Technical Specifications (TSs) Surveillance Requirement (SR) 3.5.1.3.b to correctly state that the required pressure at which the Alternate Nitrogen System is determined to be operable should be greater than or equal to 410 psig, not the former stated pressure of greater than or equal to 220 psig. The safety-related Alternate Nitrogen System provides an alternate pressure source to equipment required during or following an accident. The licensee determined that the former acceptance value specified by SR 3.5.1.3.b (greater than or equal to 220 psig) was non-conservative and needed to be corrected to the higher value.

Date of issuance: February 21, 2008

Effective date: As of the date of issuance and shall be implemented within 60 days.

Amendment No.: 155

Facility Operating License No. DPR–22: Amendment revised the Technical Specifications and the Operating License.

Date of initial notice in ***Federal Register:*** March 27, 2007 (72 FR 14307). The supplemental letter contained clarifying information, did not change the initial no significant hazards consideration determination, and did not expand the scope of the original **Federal Register** notice.

The Commission's related evaluation of the amendment is contained in a Safety Evaluation dated February 21, 2008.

No significant hazards consideration comments received: No

Pacific Gas and Electric Company, Docket No. 50–133, Humboldt Bay Power Plant, Unit 3, Humboldt County, California (TAC. No. J52690)

Date of application for amendment: May 17, 2006, supplemented January 25, 2008.

Brief description of amendment: The amendment approves a proposed change to the Physical Security Plan related to security post manning requirements.

Date of issuance: February 27, 2008

Effective date: As of the date of issuance and shall be implemented within 60 days.

Amendment No.: 42

Facility Operating License No. DPR–7: This amendment revises the License.

Date of initial notice in ***Federal Register:*** February 13, 2007 (72 FR 6788).

The Commission's related evaluation of the amendment is contained in a Safety Evaluation dated February 27, 2008.

No significant hazards consideration comments received: No

PSEG Nuclear LLC, Docket No. 50–311, Salem Nuclear Generating Station, Unit No. 2, Salem County, New Jersey

Date of application for amendment: October 17, 2007, as supplemented on January 11, 2008.

Brief description of amendment: The amendment allows a one-time revision to the requirements for fuel decay time prior to commencing movement of irradiated fuel in the reactor. Specifically, the proposed amendment revises Technical Specification (TS) 3/ 4.9.3 to allow fuel movement to commence at 86 hours after the reactor is subcritical. The proposed change is only applicable to Salem Unit 2 refueling outage 2R16 which is scheduled to commence on March 11, 2008.

Date of issuance: March 5, 2008

Effective date: As of the date of issuance, to be implemented within 7 days.

Amendment No.: 271

Facility Operating License No. DPR–75: The amendment revises the TSs and the license.

Date of initial notice in ***Federal Register:*** December 4, 2007 (72 FR 68218). The letter dated January 11, 2008, provided clarifying information that did not change the initial proposed no significant hazards consideration determination or expand the application beyond the scope of the original **Federal Register** notice.

The Commission's related evaluation of the amendment is contained in a Safety Evaluation dated March 5, 2008.

No significant hazards consideration comments received: No.

Southern Nuclear Operating Company, Inc., Docket Nos. 50–424 and 50–425, Vogtle Electric Generating Plant, Units 1 and 2, Burke County, Georgia

Date of application for amendments: August 28, 2007, as supplemented on October 9, 2007, December 21, 2007, January 18, 2008, and January 30, 2008.

Brief description of amendments: The amendments revised the ''Maximum Power Level'' in paragraph 2.C(1) of the Vogtle Electric Generating Plant, Facility Operating Licenses NPF–68 and NPF–81 for Unit 1 and Unit 2, respectively. In addition, the amendments revised the definition of

''Rated Thermal Power (RTP)'' in Technical Specification 1.1 for both units to reflect the change to the Maximum Power Level. The proposed change increased the RTP from 3565 MWt to 3625.6 MWt, resulting in an increase of 1.7% from the current reactor output. This increase in reactor core power level is referred to as a Measurement Uncertainty Recapture (MUR) power uprate.

Date of issuance: February 27, 2008

Effective date: As of the date of issuance and shall be implemented at the completion of spring 2008 refueling outage for Unit 1 and fall 2008 refueling outage for Unit 2.

Amendment Nos.: 149, 129

Facility Operating License Nos. NPF–68 and NPF–81: Amendments revised the licenses and the technical specifications.

Date of initial notice in ***Federal Register:*** November 20, 2007 (72 FR 65372). The supplements dated October 9, 2007, December 21, 2007, January 18, 2008, and January 30, 2008, provided additional information that clarified the application, did not expand the scope of the application as originally noticed, and did not change the staff's original proposed no significant hazards consideration determination.

The Commission's related evaluation of the amendments is contained in a Safety Evaluation dated February 27, 2008.

No significant hazards consideration comments received: No

Southern Nuclear Operating Company, Inc., Docket Nos. 50–424 and 50–425, Vogtle Electric Generating Plant, Units 1 and 2, Burke County, Georgia

Date of application for amendments: August 28, 2007, as supplemented on October 9, 2007, December 21, 2007, January 18, 2008, and January 30, 2008.

Brief description of amendments: The amendments revised the ''Maximum Power Level'' in paragraph 2.C(1) of the Vogtle Electric Generating Plant, Facility Operating Licenses NPF–68 and NPF–81 for Unit 1 and Unit 2, respectively. In addition, the amendments revised the definition of ''Rated Thermal Power (RTP)'' in Technical Specification 1.1 for both units to reflect the change to the Maximum Power Level. The proposed change increased the RTP from 3565 MWt to 3625.6 MWt, resulting in an increase of 1.7% from the current reactor output. This increase in reactor core power level is referred to as a Measurement Uncertainty Recapture (MUR) power uprate.

Date of issuance: February 27, 2008

Effective date: As of the date of issuance and shall be implemented at the completion of spring 2008 refueling outage for Unit 1 and fall 2008 refueling outage for Unit 2.

Amendment Nos.: 149, 129

Facility Operating License Nos. NPF–68 and NPF–81: Amendments revised the licenses and the technical specifications.

Date of initial notice in ***Federal Register:*** November 20, 2007 (72 FR 65372). The supplements dated October 9, 2007, December 21, 2007, January 18, 2008, and January 30, 2008, provided additional information that clarified the application, did not expand the scope of the application as originally noticed, and did not change the staff's original proposed no significant hazards consideration determination.

The Commission's related evaluation of the amendments is contained in a Safety Evaluation dated February 27, 2008.

No significant hazards consideration comments received: No

STP Nuclear Operating Company, Docket Nos. 50–498 and 50–499, South Texas Project, Units 1 and 2, Matagorda County, Texas

Date of amendment request: March 22, 2007, as supplemented by letters dated April 10, July 18, October 11, November 13, December 13, and December 18, 2007.

Brief description of amendments: The amendments revised the licensing basis, pursuant to Title 10 of the *Code of Federal Regulations,* Section 50.67, ''Accident Source Term,'' and approved the methodology for evaluating radiological consequences of design-basis accidents as described in Regulatory Guide 1.183, ''Alternative Radiological Source Terms for Evaluating Design Basis Accidents (DBAs) at Nuclear Power Reactors.'' The amendments revised the Technical Specifications in support of the revisions to the licensing basis.

Date of issuance: March 6, 2008

Effective date: As of the date of issuance and shall be implemented within 120 days of issuance.

Amendment Nos.: Unit 1—182; Unit 2—169

Facility Operating License Nos. NPF–76 and NPF–80: The amendments revised the Facility Operating Licenses and Technical Specifications.

Date of initial notice in ***Federal Register:*** July 31, 2007 (72 FR 41788). The supplemental letters dated April 10, July 18, October 11, November 13, December 13, and December 18, 2007, provided additional information that clarified the application, did not expand the scope of the application as originally noticed, and did not change the staff's original proposed no significant hazards consideration determination as published in the **Federal Register**.

The Commission's related evaluation of the amendments is contained in a Safety Evaluation dated March 6, 2008.

No significant hazards consideration comments received: No.

Wolf Creek Nuclear Operating Corporation, Docket No. 50–482, Wolf Creek Generating Station, Coffey County, Kansas

Date of amendment request: March 14, 2007, as supplemented by letter dated December 18, 2007.

Brief description of amendment: The amendment revised TS Table 3.3.2–1, ''Engineered Safety Features Actuation System Instrumentation,'' to separate the automatic actuation logic and actuation relays for steam line isolation (Function 4) and main feedwater isolation (Function 5) into the solid state protection system function and the main steam and feedwater isolation system. There are other proposed changes to the TSs and the plant in the application that are not being addressed in this amendment. The amendment to revise Surveillance Requirements 3.7.2.1 and 3.7.3.1 to replace the valve isolation times with the phrase ''within limits'' was issued August 28, 2007. The remaining TS and plant changes in the application will be addressed in future letters to the licensee.

Date of issuance: March 3, 2008

Effective date: As of its date of issuance and shall be implemented prior to the startup from Refueling Outage 16, scheduled for the spring of 2008.

Amendment No.: 175

Facility Operating License No. NPF–42: The amendment revised the Operating License and Technical Specifications.

Date of initial notice in ***Federal Register:*** The supplemental letter dated December 18, 2007, did not expand the scope of the application as originally noticed, and did not change the NRC staff's original proposed no significant hazards consideration determination published in the **Federal Register** on June 19, 2007 (72 FR 33785).

The Commission's related evaluation of the amendment is contained in a Safety Evaluation dated March 3, 2008.

No significant hazards consideration comments received: No

Dated at Rockville, Maryland, this 17th day of March 2008.

For the Nuclear Regulatory Commission.

Catherine Haney,

Director, Division of Operating Reactor Licensing, Office of Nuclear Reactor Regulation.

[FR Doc. E8–5734 Filed 3–24–08; 8:45 am]

BILLING CODE 7590–01–P

NUCLEAR REGULATORY COMMISSION

Office of New Reactors; Interim Staff Guidance on the Use of the GALE86 Code for Calculation of Routine Radioactive Releases in Gaseous and Liquid Effluents to Support Design; Certification and Combined License Applications; Solicitation of Public Comment

AGENCY: Nuclear Regulatory Commission (NRC).

ACTION: Solicitation of public comment.

SUMMARY: The NRC is soliciting public comment on its Proposed Interim Staff Guidance COL/DC–ISG–005. This interim staff guidance supplements the guidance provided to the staff in Chapter 11, ''Radioactive Waste Management,'' of NUREG–0800, ''Standard Review Plan (SRP) for the Review of Safety Analysis Reports for Nuclear Power Plants,'' concerning the review of radioactive releases in gaseous and liquid effluents (GALE) to support design certification and combined license applications. This guidance provides a clarification on the use of a newer version of the boiling-water reactor and pressurized-water reactors GALE codes that is not referenced in the current NRC guidance. Upon receiving public comments, the NRC staff will evaluate and disposition the comments, as appropriate. Once the NRC staff completes the COL/DC–ISG–005, it will be issued for NRC and industry use. The NRC staff will also incorporate the approved COL/DC–ISG–005 into the next revision of the SRP and related guidance documents.

DATES: Comments must be filed no later than 30 days from the date of publication of this notice in the **Federal Register**. Comments received after this date will be considered, if it is practical to do so, but the Commission is able to ensure consideration only for comments received on or before this date.

ADDRESSES: Comments may be submitted to: Chief, Rules and Directives Branch, Office of Administration, U.S. Nuclear Regulatory Commission, Washington, DC, 20555–0001.

Comments should be delivered to: 11545 Rockville Pike, Rockville, Maryland, Room T–6D59, between 7:30 a.m. and 4:15 p.m. on Federal workdays. Persons may also provide comments via e-mail to Timothy Frye at *tjf@nrc.gov*. The NRC maintains an Agencywide Documents Access and Management System (ADAMS), which provides text and image files of NRC's public documents. These documents may be accessed through the NRC's Public Electronic Reading Room on the Internet at *http://www.nrc.gov/reading-rm/adams.html*. Persons who do not have access to ADAMS or who encounter problems in accessing the documents located in ADAMS should contact the NRC Public Document Room (PDR) reference staff at 1–800–397–4209, 301–415–4737, or by e-mail at *pdr@nrc.gov*.

FOR FURTHER INFORMATION CONTACT: Mr. Timothy Frye, Chief, Health Physics Branch, Division of Construction, Inspection & Operational Programs, Office of the New Reactors, U.S. Nuclear Regulatory Commission, Washington, DC 20555–0001; telephone 301–415–3900 or e-mail at *tjf@nrc.gov*.

SUPPLEMENTARY INFORMATION: The agency posts its issued staff guidance in the agency external Web page (*http://www.nrc.gov/reading-rm/doc-collections/isg/*).

The NRC staff is issuing this notice to solicit public comments on the proposed COL/DC–ISG–005. After the NRC staff considers any public comments, it will make a determination regarding the proposed COL/DC–ISG–005.

Dated at Rockville, Maryland, this 19th day of March 2008.

For the Nuclear Regulatory Commission.

William D. Reckley,

Branch Chief, Rulemaking, Guidance and Advanced Reactors Branch, Division of New Reactor Licensing, Office of New Reactors.

[FR Doc. E8–5962 Filed 3–24–08; 8:45 am]

BILLING CODE 7590–01–P

NUCLEAR REGULATORY COMMISSION

Advisory Committee on Nuclear Waste and Materials; Meeting Notice

The Advisory Committee on Nuclear Waste and Materials (ACNW&M) will hold its 188th meeting on April 8–10, 2008, at 11545 Rockville Pike, Rockville, Maryland.

Tuesday, April 8, 2008, Room T–2B3

8 a.m.–4:10 p.m.: Working Group on the Effects of Low Radiation Doses Science And Policy (Open)—Purpose: The objectives of this Working Group Meeting are: (1) To discuss the Linear Non-Threshold (LNT) theory in light of current health physics, medical theory and cohort databases; (2) to review uncertainties about the presence or absence of health effects at low doses; (3) to examine the balance of science and policy in regulatory practice; (4) to discuss possible alternative approaches to the LNT theory in regulatory practice; and (5) to develop the information necessary to provide a letter report to the Commission.

8–8:05 a.m.: Greetings and Introductions (Open)—Dr. Michael Ryan, the cognizant ACNW&M Member for this meeting topic, will provide an overview of the expected goals for the Working Group Meeting, the planned technical sessions, and introduce the invited speakers.

8:05–8:25 a.m.: Opening Remarks by NRC Commissioner Peter B. Lyons (Open)

8:25 a.m.–4:10 p.m.: Session I: The State of the Science (Open)—This session will include six presentations. There will be a lunch break from 11:45 a.m.–1 p.m.

4:10–5 p.m.: Discussion of ACNW&M Letter Reports (Open)—The Committee will discuss potential ACNW&M letter reports on matters considered during previous meetings: (1) Managing Low-Activity Radioactive Waste; (2) Use of Burnup Credit for Licensing Spent Fuel Transportation Casks.

Wednesday, April 9, 2008, Room T–2B3

8:30 a.m.–4:10 p.m.: Working Group on the Effects of Low Radiation Doses Science and Policy—Continuation (Open)—Session II: Balancing Science and Policy in the Regulatory Area. There will be three presentations and a panel discussion. A lunch break will be held from 11:15 a.m.–1 p.m.

4:10–5 p.m.: Discussion of ACNW&M Letter Reports (Open)—Continued discussion of proposed and potential ACNW&M letter reports mentioned previously, as well as (3) Effects of Low Radiation Doses.

Thursday, April 10, 2008, Room T–2B1

8:30–8:35 a.m.: Opening Remarks by the ACNW&M Chairman (Open) The Chairman will make opening remarks regarding the conduct of today's sessions.

8:35 a.m.–12 p.m.: Discussion of ACNW&M Letter Reports (Open) (All) Continued discussion of proposed and potential ACNW&M letter reports previously listed.

4:10–5 p.m.: Miscellaneous (Open)—The Committee will discuss matters related to the conduct of ACNW&M activities and specific issues that were not completed during previous meetings. Discussions may include

content of future letters and scope of future Committee Meetings.

Procedures for the conduct of and participation in ACNW&M meetings were published in the **Federal Register** on September 26, 2007 (72 FR 54693). In accordance with those procedures, oral or written views may be presented by members of the public. Electronic recordings will be permitted only during those portions of the meeting that are open to the public. Persons desiring to make oral statements should notify Dr. Antonio F. Dias (Telephone 301–415–6805), between 8:15 a.m. and 5 p.m. (ET), as far in advance as practicable so that appropriate arrangements can be made to schedule the necessary time during the meeting for such statements. Use of still, motion picture, and television cameras during the meeting may be limited to selected portions of the meeting as determined by the ACNW&M Chairman. Information regarding the time to be set aside for taking pictures may be obtained by contacting the ACNW&M office prior to the meeting. In view of the possibility that the schedule for ACNW&M meetings may be adjusted by the Chairman as necessary to facilitate the conduct of the meeting, persons planning to attend should notify Dr. Dias as to their particular needs.

Further information regarding topics to be discussed, whether the meeting has been canceled or rescheduled, as well as the Chairman's ruling on requests for the opportunity to present oral statements and the time allotted therefore can be obtained by contacting Dr. Dias.

Video teleconferencing service is available for observing open sessions of ACNW&M meetings. Those wishing to use this service for observing ACNW&M meetings should contact Mr. Theron Brown, ACRS/ACNW&M Audio Visual Assistant (301–415–8066), between 7:30 a.m. and 3:45 p.m., (ET), at least 10 days before the meeting to ensure the availability of this service. Individuals or organizations requesting this service will be responsible for telephone line charges and for providing the equipment and facilities that they use to establish the video teleconferencing link. The availability of video teleconferencing services is not guaranteed.

During the days of the meeting, phone number 301–415–7360 should be used in order to access anyone in the ACNW&M Office.

ACNW&M meeting agenda, meeting transcripts, and letter reports are available through the NRC Public Document Room at *pdr@nrc.gov*, or by calling the PDR at 1–800–397–4209, or from the Publicly Available Records System (PARS) component of NRC's document system (ADAMS) which is accessible from the NRC Web site at *http://www.nrc.gov/reading-rm/adams.html or http://www.nrc.gov/reading-rm/doc-collections/acnw* (ACNW&M schedules and agendas).

Dated: March 19, 2008.

Andrew L. Bates,

Advisory Committee Management Office.

[FR Doc. E8–5979 Filed 3–24–08; 8:45 am]

BILLING CODE 7590–01–P

NUCLEAR REGULATORY COMMISSION

Sunshine Federal Register Notice.

AGENCY: Agency Holding the Meetings: Nuclear Regulatory Commission.

DATES: Weeks of March 24, 31, April 7, 14, 21, 28, 2008.

PLACE: Commissioners' Conference Room, 11555 Rockville Pike, Rockville, Maryland.

STATUS: Public and Closed.

MATTERS TO BE CONSIDERED:

Week of March 24, 2008

Thursday, March 27, 2008

9:25 a.m. Affirmation Session (Public Meeting) (Tentative).

a. Pa'ina Hawaii, LLC (Materials License Application) Atomic Safety and Licensing Board's Decision on Environmental Contentions (Dec. 21, 2007) (Tentative).

b. Pacific Gas and Electric Co. (Diablo Canyon ISFSI), Docket No. 72–26-ISFSI, San Luis Obispo Mothers for Peace's Response to NRC Staff's Vaughn Index, Request for Leave to Conduct Discovery Against the NRC Staff, Request for Access to Unredacted Reference Documents, and Request for Procedures to Protect Submission of Sensitive Information (Tentative).

9:30 a.m. Discussion of Management Issues (Closed—Ex. 2)

Week of March 31, 2008—Tentative

There are no meetings scheduled for the Week of March 31, 2008.

Week of April 7, 2008—Tentative

Monday, April 7, 2008

9:30 a.m. Briefing on Digital Instrumentation and Control (Public Meeting) (Contact: Steven Arndt, 301 415–6502).

This meeting will be webcast live at the Web address—*http://www.nrc.gov.*

Tuesday, April 8, 2008

10 a.m. Joint Meeting of the Federal Energy Regulatory Commission (FERC) and the Nuclear Regulatory Commission (NRC) (Public Meeting).

To be Held at FERC Headquarters, 888 First Street NE., Washington, DC. (Contact: Michelle Schroll, 301 415–1662).

This meeting will be webcast live at the Web address—*http://www.ferc.gov.*

Wednesday, April 9, 2008

1 p.m. Discussion of Management Issues (Closed—Ex. 2).

Week of April 14, 2008—Tentative

There are no meetings scheduled for the Week of April 14, 2008.

Week of April 21, 2008—Tentative

There are no meetings scheduled for the Week of April 21, 2008.

Week of April 28, 2008—Tentative

Monday, April 28, 2008

9:30 a.m. Briefing on Reactor Materials Issues (Public Meeting) (Contact: Ted Sullivan, 301 415–2796).

This meeting will be webcast live at the Web address—*http://www.nrc.gov.*

Tuesday, April 29, 2008

1:30 p.m. Meeting with Advisory Committee on the Medical Uses of Isotopes (Public Meeting) (Contact: Ashley Tull, 918–488–0552).

This meeting will be webcast live at the Web address—*http://www.nrc.gov.*

Wednesday, April 30, 2008

9:30 a.m. Briefing on Materials Licensing and Security (Public Meeting). (Contact: Doug Broaddus, 301 415–8124).

This meeting will be webcast live at the Web address—*http://www.nrc.gov.*

1:30 p.m. Briefing on NRC Combined Infrastructure (Public Meeting). (Contact: Peter Rabideau, 301 415–7323).

This meeting will be webcast live at the Web address—*http://www.nrc.gov.*

* * * * *

* The schedule for Commission meetings is subject to change on short notice. To verify the status of meetings, call (recording)—(301) 415–1292. Contact person for more information: Michelle Schroll, (301) 415–1662.

* * * * *

The NRC Commission Meeting Schedule can be found on the Internet at: *http://www.nrc.gov/about-nrc/policy-making/schedule.html.*

* * * * *

Additional Information

Affirmation of ''Pa'ina Hawaii, LLC (Materials License Application) Atomic Safety and Licensing Board's Decision

on Environmental Contentions (Dec. 21, 2007) (Tentative)''; and ''Pacific Gas and Electric Co. (Diablo Canyon ISFSI), Docket No. 72–26–ISFSI, San Luis Obispo Mothers for Peace's Response to NRC Staff's Vaughn Index, Request for Leave to Conduct Discovery Against the NRC Staff, Request for Access to Unredacted Reference Documents, and Request for Procedures To Protect Submission of Sensitive Information (Tentative)'' previously scheduled on Monday, March 17, 2008 at 12:55 p.m. has been rescheduled on Thursday, March 27, 2008 at 9:25 a.m.

* * * * *

The NRC provides reasonable accommodation to individuals with disabilities where appropriate. If you need a reasonable accommodation to participate in these public meetings, or need this meeting notice or the transcript or other information from the public meetings in another format (e.g. braille, large print), please notify the NRC's Disability Program Coordinator, Rohn Brown, at 301–492–2279, TDD: 301–415–2100, or by e-mail at *REB3@nrc.gov.* Determinations on requests for reasonable accommodation will be made on a case-by-case basis.

* * * * *

This notice is distributed by mail to several hundred subscribers; if you no longer wish to receive it, or would like to be added to the distribution, please contact the Office of the Secretary, Washington, DC 20555 (301–415–1969). In addition, distribution of this meeting notice over the Internet system is available. If you are interested in receiving this Commission meeting schedule electronically, please send an electronic message to: *dkw@nrc.gov.*

Dated: March 20, 2008.

R. Michelle Schroll,

Office of the Secretary.

[FR Doc. 08–1071 Filed 3–21–08; 11:21 am]

BILLING CODE 7590–01–P

OFFICE OF PERSONNEL MANAGEMENT

Proposed Collection; Comment Request for Review of a Revised Information Collection: RI 38–31

AGENCY: Office of Personnel Management.

ACTION: Notice.

SUMMARY: In accordance with the Paperwork Reduction Act of 1995 (Public Law 104–13, May 22, 1995), this notice announces that the Office of Personnel Management (OPM) has submitted to the Office of Management and Budget (OMB) a request for review of a revised information collection. RI 38–31, Request for Information About Your Missing Payment, is sent in response to a notification by an individual of the loss or non-receipt of a payment from the Civil Service Retirement and Disability Fund. This form requests the information needed to enable OPM to trace and/or reissue payment. Missing payments may also be reported to OPM.

Approximately 8,000 reports of missing payments are processed each year. Of these, we estimate that 7,800 are reports of missing checks. Approximately 200 reports of missing checks are reported using RI 38–31 and 7,600 are reported by telephone. A response time of ten minutes per form reporting a missing check is estimated; the same amount of time is needed to report the missing checks or electronic funds transfer (EFT) payments using the telephone. The annual burden for reporting missing checks is 1,300 hours. The remaining 200 reports relate to EFT payments. No missing EFT payments are reported using RI 38–31. The annual burden for reporting missing EFT payments is 33 hours. The total burden is 1,333 hours.

For copies of this proposal, contact Mary Beth Smith-Toomey on (202) 606–8358, Fax (202) 418–3251 or via e-mail to *MaryBeth.Smith-Toomey@opm.gov*. Please include a mailing address with your request.

DATES: Comments on this proposal should be received within 30 calendar days from the date of this publication.

ADDRESSES: Send or deliver comments to Ronald W. Melton, Deputy Assistant Director, Retirement Services Program, Center for Retirement and Insurance Services, U.S. Office of Personnel Management, 1900 F Street, NW., Room 3305, Washington, DC 20415–3500, and Brenda Aguilar, OPM Desk Officer, Office of Information & Regulatory Affairs, Office of Management and Budget, New Executive Office Building, NW., Room 10235, Washington, DC 20503.

For information regarding administrative coordination—contact: Cyrus S. Benson, Team Leader, Publications Team, RIS Support Services/Support Group, (202) 606–0623.

U.S. Office of Personnel Management.

Howard Weizmann,

Deputy Director.

[FR Doc. E8–5876 Filed 3–24–08; 8:45 am]

BILLING CODE 6325–38–M

SECURITIES AND EXCHANGE COMMISSION

[SEC File No. 270–406; OMB Control No. 3235–0463]

Extension; Comment Request; ''Tell Us How We're Doing!''

Upon written request, copies available from: Securities and Exchange Commission, Office of Investor Education and Advocacy, Washington, DC 20549–0213.

Notice is hereby given that, pursuant to the Paperwork Reduction Act of 1995 (44 U.S.C. 3501 *et seq.*), the Securities and Exchange Commission (''Commission'') is soliciting comments on the collection of information summarized below. The Commission plans to submit this previously-approved questionnaire to the Office of Management and Budget for approval.

The Commission currently sends the questionnaire to persons who have used the services of the Commission's Office of Investor Education and Advocacy. The questionnaire consists mainly of eight (8) questions concerning the quality of services provided by OIEA. Most of the questions can be answered by checking a box on the questionnaire.

The Commission needs the information to evaluate the quality of services provided by OIEA. Supervisory personnel of OIEA use the information collected in assessing staff performance and for determining what improvements or changes should be made in OIEA operations for services provided to investors.

The respondents to the questionnaire are those investors who request assistance or information from OIEA.

The total reporting burden of the questionnaire in 2004 was approximately 5 hours and 45 minutes. This was calculated by multiplying the total number of investors who responded to the questionnaire times how long it is estimated to take to complete the questionnaire (23 respondents x 15 minutes = 5 hours and 45 minutes).

Written comments are invited on: (a) Whether the proposed collection of information is necessary for the proper performance of the functions of the agency, including whether the information will have practical utility; (b) the accuracy of the agency's estimate of the burden of the collection of information; (c) ways to enhance the quality, utility, and clarity of the information collected; and (d) ways to minimize the burden of the collection of information on respondents, including through the use of automated collection techniques or other forms of information

technology. Consideration will be given to comments and suggestions submitted in writing within 60 days of this publication.

Please direct your written comments to R. Corey Booth, Director/Chief Information Officer, Securities and Exchange Commission, C/O Shirley Martinson, 6432 General Green Way, Alexandria, Virginia 22312; or send an e-mail to: *PRA_Mailbox@sec.gov*.

Dated: March 17, 2008.

Florence E. Harmon,

Deputy Secretary.

[FR Doc. E8–5920 Filed 3–24–08; 8:45 am]

BILLING CODE 8011–01–P

SECURITIES AND EXCHANGE COMMISSION

[Rel. No. IC–28197; File No. 812–13445]

American Family Life Insurance Company, et al.

March 19, 2008.

AGENCY: U.S. Securities and Exchange Commission (''Commission'').

ACTION: Notice of application for an order under Section 26(c) of the Investment Company Act of 1940, as amended (the ''Act'').

APPLICANTS: American Family Life Insurance Company (the ''Company''), American Family Variable Account I (the ''Life Account''), and American Family Variable Account II (the ''Annuity Account,'' and together with the Company and Life Account, the ''Applicants'').

SUMMARY OF APPLICATION: Applicants request an order of the Commission, pursuant to Section 26(c) of the Act, approving the substitution of (1) Service Class Shares of the Fidelity Variable Insurance Products Investment Grade Bond Portfolio (''Replacement Portfolio A'') of the Fidelity Variable Insurance Products Fund V (''Fidelity Fund'') for shares of the Federated Quality Bond Fund II (''Replaced Portfolio A'') of the Federated Insurance Series (''Federated Fund'') and (2) shares of the Vanguard International Portfolio (''Replacement Portfolio B'') of the Vanguard Variable Insurance Fund (''Vanguard Fund'') for shares of the Federated International Equity Fund II (''Replaced Portfolio B'') of the Federated Fund, currently held by the Life Account and the Annuity Account (each an ''Account,'' together, the ''Accounts'') to support variable life insurance and annuity contracts issued by the Company (collectively, the ''Contracts'').

FILING DATE: The application was filed on November 2, 2007 and amended and restated on March 14, 2008.

HEARING OR NOTIFICATION OF HEARING: An order granting the application will be issued unless the Commission orders a hearing. Interested persons may request a hearing by writing to the Secretary of the Commission and serving Applicants with a copy of the request, personally or by mail. Hearing requests must be received by the Commission by 5:30 p.m. on April 15, 2008, and should be accompanied by proof of service on Applicants in the form of an affidavit or, for lawyers, a certificate of service. Hearing requests should state the nature of the requester's interest, the reason for the request, and the issues contested. Persons who wish to be notified of a hearing may request notification by writing to the Secretary of the Commission.

ADDRESSES: Secretary, Securities and Exchange Commission, 100 F Street, NE., Washington, DC 20549–1090. Applicants, c/o James F. Eldridge, Esq., American Family Life Insurance Company, 6000 American Parkway, Madison, Wisconsin 53783–0001. Copy to Thomas E. Bisset, Esq., Sutherland Asbill & Brennan LLP, 1275 Pennsylvania Ave., NW., Washington, DC 20004–2415.

FOR FURTHER INFORMATION CONTACT: Michael Kosoff, Staff Attorney, at (202) 551–6754 or Harry Eisenstein, Branch Chief, Office of Insurance Products, Division of Investment Management, at (202) 551–6795.

SUPPLEMENTARY INFORMATION: The following is a summary of the application. The complete application may be obtained for a fee from the Public Reference Branch of the Commission, 100 F Street, NE., Washington, DC 20549 (202–551–8090).

Applicants' Representations

1. The Company is a stock life insurance company organized under Wisconsin law in 1957. The company is a wholly-owned subsidiary of AmFam, Inc. AmFam, Inc. is a downstream holding company and a wholly-owned subsidiary of American Family Mutual Insurance Company (''American Family Mutual''). American Family Mutual is one of the leading property/casualty insurance companies in the United States with operations in eighteen states. As of December 31, 2006, the Company had assets in excess of $4.2 billion.

2. The Company conducts a conventional life insurance business and is authorized to transact the business of life insurance, including annuities, in eighteen states. For purposes of the Act, the Company is the depositor and sponsor of each of the Accounts as those terms have been interpreted by the Commission with respect to variable life insurance and variable annuity separate accounts.

3. Under the insurance law of Wisconsin, the assets of each Account attributable to the Contracts issued through that Account are owned by the Company, but are held separately from the other assets of the Company for the benefit of the owners of, and the persons entitled to payment under, those Contracts. Each Account is registered with the Commission as a unit investment trust. Each Account is comprised of a number of subaccounts and each subaccount invests exclusively in one of the insurance dedicated mutual fund portfolios made available as investment vehicles underlying the Contracts. Currently, Replaced Portfolio A and Replaced Portfolio B are each available as an investment option under the Company's variable life insurance and variable annuity contracts.

4. The Life Account is currently divided into nine subaccounts. The assets of the Life Account support variable life insurance contracts and interests in the Account offered through such contracts have been registered under the Securities Act of 1933, as amended (the ''1933 Act''), on Form N–6 (File No. 333–44956).

5. The Annuity Account is currently divided into nine subaccounts. The assets of the Annuity Account support variable annuity contracts and interests in the Account offered through such contracts have been registered under the 1933 Act on Form N–4 (File No. 333–45592).

6. The Federated Fund is registered as an open-end management investment company under the Act (File No. 811–08042) and currently offers twelve (12) separate investment portfolios (each, a ''Portfolio''), two of which would be involved in the proposed substitution. The Federated Fund issues a separate series of shares of beneficial interest in connection with each Portfolio and has registered those shares under the 1933 Act on Form N–1A (File No. 33–69268).

7. Federated Investment Management Company (''FIMC'') serves as the investment advisor for Replaced Portfolio A. The advisor manages the Fund's assets, including buying and selling portfolio securities. Federated Advisory Services Company (''FASC''), an affiliate of the advisor, provides certain support services to the advisor. The fee for FASC's services is paid by FIMC and not by the Fund.

8. Federated Global Investment Management Corp. (''FGIMC'') serves as the investment advisor for Replaced Portfolio B. The advisor manages the Fund's assets, including buying and selling portfolio securities. FASC provides research, quantitative analysis, equity trading and transaction settlement and certain support services to the advisor. The fee for FASC's services is paid by FGIMC and not by the Fund.

9. Neither the Federated Fund, any of its portfolios, FGIMC, FIMC, nor FASC is affiliated with the Applicants. Neither Replaced Portfolio A nor Replaced Portfolio B has exemptive relief from Section 15(a) of the Act and Rule 18f–2 under the Act to permit the hiring of sub-advisors and the revision of sub-advisory agreements without obtaining a shareholder vote (''manager-of-manager relief'').

10. The Fidelity Fund is registered as an open-end management investment company under the Act (File No. 811–05361) and currently offers twenty-three (23) investment portfolios, including Replacement Portfolio A. The Fidelity Fund issues a series of shares of beneficial interest in connection with each portfolio and has registered such shares under the 1933 Act on Form N–1A (File No. 033–17704).

11. Each portfolio of the Fidelity Fund has entered into an advisory agreement with Fidelity Management and Research Company (''FMR'') under which FMR acts as investment advisor for the portfolio. Under each investment advisory agreement, FMR has overall responsibility for the selection of investments in accordance with the investment objective, policies, and limitations of the portfolio and for handling the portfolio's business affairs. FMR, at its own expense, provides or arranges for the provision of substantially all management and administrative services required by each portfolio. Each portfolio of the Fidelity Fund does, however, pay its own auditor's fees, compensation to (and expenses of) trustees who are not interested persons, independent counsel fees, custodian fees and extraordinary expenses.

12. Fidelity Investments Money Management, Inc. (''FIMM''), an investment advisor affiliate of FMR, has entered into a sub-advisory agreement with FMR under which FIMM acts as sub-advisor for the Fidelity Fund, including Replacement Portfolio A. FIMM has day-to-day responsibility for choosing investments for Replacement Portfolio A. FMR pays FIMM for providing sub-advisory services. As of March 29, 2007, FMR and FIMM had over $1.6 billion and $370 billion in assets under management, respectively.

13. Fidelity Research & Analysis Company (''FRAC''), an affiliate of FMR, also serves as sub-advisor for the Fidelity Fund and may provide investment research and advice for the Fidelity Fund, including Replacement Portfolio A.

14. Fidelity International Investment Advisors (''FIIA'') and Fidelity International Investment Advisors (U.K.) Limited (''FIIA(U.K.)'') investment advisor affiliates of FMR, assist FMR with the investment and reinvestment of assets in Replacement Portfolio A in foreign investments. FIIA and FIAA(U.K.) have each entered into a sub-advisory agreement with FMR and each acts as sub-advisor to Replacement Fund A. Under the sub-advisory agreements, FMR may receive from FIIA and FIAA(U.K.) investment research and advice on issuers based outside the United States and, in particular, makes minimal credit risk and comparable quality determinations for foreign issuers that issue U.S. dollar-denominated securities. FMR or FIMM pays FIIA for providing sub-advisory services. In turn, FIIA pays FIIA(U.K.) for providing sub-advisory services.

15. Neither the Fidelity Fund, any of its portfolios, FMR, FIMM, FRAC, FIIA nor FIAA(U.K.) is affiliated with the Applicants. The Fidelity Fund does not have manager-of-managers relief.

16. The Vanguard Variable Insurance Fund is registered as an open-end management investment company under the Act (File No. 811–05962) and currently offers fifteen (15) portfolios. The Vanguard Fund issues a series of shares of beneficial interest in connection with each portfolio and has registered such shares under the 1933 Act on Form N–1A (File No. 33–32216).

17. The Vanguard Fund uses a multi-manager approach to investing the assets of Replacement Portfolio B, and has entered into investment advisory agreements with Baillie Gifford Overseas Ltd. (''Baillie Gifford'') and Schroder Investment Management North America Inc. (''Schroders''). The board of trustees of the Vanguard Fund designates the proportion of Replacement Portfolio B assets to be managed by each advisor, and may change those proportions at any time. Under the supervision and oversight of the trustees and officers of the Vanguard Fund, each advisor independently selects and maintains a portfolio of common stocks for its assigned portion of the assets of Replacement Portfolio B. The Fund pays each advisor a fee at the end of each quarter.

18. Baillie Gifford—located at Carlton Square, 1 Greenside Row, Edinburgh, EH1 3AN, Scotland—is wholly-owned by Baillie Gifford & Co., one of the largest independently owned investment management firms in the United Kingdom. As of December 31, 2006, Baillie Gifford & Co. had assets under management that totaled approximately $95 billion.

19. Schroders has entered into a sub-advisory agreement with its affiliate, Schroder Investment Management North America Limited (''Schroder Limited''), pursuant to which Schroder Limited has primary responsibility for choosing investments for Schroder's assigned portion of the Replacement Portfolio B assets. Schroders pays Schroder Limited a portion of the management fees payable to Schroders under the management agreement between Schroders and the Vanguard Fund. Both Schroders and Schroder Limited are wholly-owned subsidiaries of Schroders plc, the ultimate parent of a large world-wide group of financial service companies. As of September 30, 2006, Schroders, together with its affiliated companies, managed approximately $229.4 billion in assets.

20. Neither the Vanguard Fund or any of its portfolios, Baillie Gifford, or Schroders is affiliated with the Applicants. The Vanguard Fund has manager-of-manager relief.[1]

21. The Contracts are flexible premium variable annuity and variable life insurance contracts. The variable annuity Contracts provide for the accumulation of values on a variable basis, fixed basis, or both, during the accumulation period, and provide settlement or annuity payment options on a fixed basis. The variable life insurance Contracts provide for the accumulation of values on a variable basis, fixed basis, or both, throughout the insured's life, and for a substantial death benefit upon the death of the insured. Under each of the Contracts, the Company reserves the right to substitute shares of one Fund for shares of another, or of another investment portfolio, including a portfolio of a different management company.

22. The Company proposes to substitute Service Class shares of Replacement Portfolio A for shares of Replaced Portfolio A, and to substitute shares of Replacement Portfolio B for shares of Replaced Portfolio B held in the Accounts (the ''proposed substitutions'').

[1] Vanguard Convertible Securities Fund, *et al.*, Inv. Co. Act Rel. No. 26089 (June 25, 2003 (Order), File No. 812–12380.

23. The proposed substitutions are part of an effort by the Company to provide a portfolio selection within the Contracts that: (1) Provides a more competitive fee structure relative to other funds in the asset class peer group; (2) provides more competitive long-term returns relative to other funds in the asset class peer group; and (3) maintains the goal of offering a mix of investment options covering basic categories in the risk/return spectrum.

24. The following charts set out the investment objectives, principal investment strategies, and principal investment risks of each Replaced and Replacement Portfolio, as stated in their respective prospectuses.

Replaced Portfolio A	Replacement Portfolio A
Federated Quality Bond Fund II	**Fidelity VIP Investment Grade Bond Portfolio**
Investment Objective	**Investment Objective**
Current income	High current income consistent with preservation of capital.
Principal Investment Strategies	**Principal Investment Strategies**
The fund invests in a diversified portfolio of investment-grade, fixed-income securities, consisting primarily of corporate debt securities, U.S. government and privately issued mortgage-backed securities, and U.S. Treasury and agency securities. The investment advisor seeks to enhance the fund's performance by allocating relatively more of its portfolio to the security type that the advisor expects to offer the best balance between current income and risk. Some of the corporate debt securities in which the fund invests are considered to be ''foreign securities.'' The fund may invest in derivative contracts to implement its investment strategies.	FMR normally invests at least 80% of the fund's assets in investment-grade debt securities (those of high and medium quality) of all types and repurchase agreements for those securities. FMR manages the fund to have an overall interest rate risk similar to the Lehman Brothers Aggregate Bond Index. The investment advisor allocates assets across different market sectors and maturities and invests in domestic and foreign issuers. FMR analyzes the credit quality of the issuer, security-specific features, current and potential future valuation, and trading opportunities to select investments for the fund.
Although the value of the Fund's shares will fluctuate, the investment advisor seeks to manage the magnitude of the fluctuation by limiting, under normal market conditions, the Fund's dollar-weighted average maturity to between three and ten years and dollar-weighted average duration to between three and seven years.	The fund may invest in lower-quality debt securities, sometimes referred to as ''junk bond securities,'' and in Fidelity's central funds. The fund may engage in transactions that have a leveraging effect.
Principal Investment Risks	**Principal Investment Risks**
Interest Rate Risk. Prices of fixed-income securities generally fall when interest rates rise. Interest rate changes have a greater effect on the price of fixed-income securities with longer durations.	Interest Rate Changes. Interest rate increases can cause the price of a debt security to decrease.
Credit Risk. Issuers of securities in which the fund may invest may default in the payment of interest or principal on securities when due.	Foreign Exposure. Foreign markets can be more volatile than the U.S. market due to increased risks of adverse issuer, political, regulatory, market, or economic developments, and can perform differently than the U.S. market.
Call and Prepayment Risk. An issuer of a security held by the fund may redeem the security prior to maturity at a price below its current market value.	Prepayment. The ability of an issuer of a debt security to repay principal prior to a security's maturity can cause greater price volatility if interest rates change.
Risks of Foreign Investing. Share price may be more affected by foreign economic and political conditions, taxation policies and accounting standards than would otherwise be the case.	Issuer-Specific Changes. The value of an individual security or particular type of security can be more volatile than the market as a whole and can perform differently from the value of the market as a whole. Lower-quality debt securities (those of less than investment-grade quality) involve greater risk of default or price changes due to changes in the credit quality of the issuer. The value of lower-quality debt securities can be more volatile due to increased sensitivity to adverse issuer, political, regulatory, market, or economic developments.
Liquidity Risk. Fixed-income securities may be less readily marketable and subject to greater fluctuation in price than other securities. Also, the fund may not be able to sell a security or close out a derivative contract when desired.	Leverage Risk. Leverage can increase market exposure and magnify investment risks.

Replaced Portfolio B	Replacement Portfolio B
Federated International Equity Fund II	**Vanguard International Portfolio**
Investment Objective	**Investment Objective**
Total return on assets by investing primarily in equity securities of companies based outside the United States. Total return will consist of two components: (1) changes in the market value of portfolio securities (both realized and unrealized appreciation); and (2) income received from portfolio securities. Changes in market value are expected to comprise the largest component of total return.	Long-term capital appreciation.
Principal Investment Strategies	**Principal Investment Strategies**
The investment advisor uses a ''bottom-up'' approach to stock selection and selection of industry and country are secondary considerations. The fund is not limited to investing according to any particular style or size of company, or to maintaining minimum allocations to any particular region or country. However, the investment advisor anticipates that normally the fund will primarily invest in mid-to large-capitalization companies based outside the United States that have been selected using a growth style of stock selection. The fund may invest up to 20% of its assets in foreign companies based in emerging markets.	The portfolio invests predominantly in the stocks of companies located outside the United States. In selecting stocks, the portfolio's investment advisors evaluate foreign markets around the world and choose companies with above-average growth potential. The portfolio uses multiple investment advisors.

Replaced Portfolio B	Replacement Portfolio B
Principal Investment Risks Stock Market Risks. The value of equity securities in the fund's portfolio will fluctuate and, as a result, the fund's share price may decline suddenly or over a sustained period of time. Risks of Foreign Investing. Share price may be more affected by foreign economic and political conditions, taxation policies, and accounting and auditing standards than would otherwise be the case. Currency Risks. Because the exchange rates for currencies fluctuate daily, prices of the foreign market securities in which the fund invests are more volatile than prices of securities traded exclusively in the United States. Emerging Market Risks. Securities issued or traded in emerging markets generally entail greater risks than securities issued or traded in developed markets. Emerging market countries may have relatively unstable governments and may present the risk of nationalization of businesses, expropriation, confiscatory taxation or, in certain instances, reversion to closed market, centrally planned economies. Liquidity Risks. Trading opportunities are more limited for equity securities that are not widely held. This may make it more difficult to sell or buy a security at a favorable price or time. Consequently, the fund may have to accept a lower price to sell a security, sell other securities to raise cash, or give up an investment opportunity, any of which could have a negative effect on the fund's performance.	**Principal Investment Risks** Stock Market Risk. Stock market risk is the chance that stock prices overall will decline. Stock markets tend to move in cycles, with periods of rising prices and periods of falling prices. In addition, investments in foreign stock markets can be riskier than U.S. stock investments. The prices of foreign stocks and the prices of U.S. stocks have, at times, moved in opposite directions. Investment Style Risk. Investment style risk is the chance that returns from non-U.S. growth stocks, and, to the extent that the portfolio is invested in them, small- and mid-capitalizations stocks, will trail returns from the overall domestic stock market. Historically, small- and mid-cap stocks have been more volatile in price than large-cap stocks that dominate the market, and they often perform quite differently. Country Risk/Regional Risk. Country risk/regional risk is the chance that domestic events—such as political upheaval, financial troubles, or natural disasters—will weaken a country's or region's securities markets. Because the portfolio may invest a large portion of its assets in securities of companies located in any one country or region, its performance may be hurt disproportionately by the poor performance of investments in that area. Country/regional risk is especially high in emerging markets. Currency Risk. Currency risk is the chance that the value of a foreign investment, measured in U.S. dollars, will decrease because of unfavorable changes in currency exchange rates. Manager Risk. Manager risk is the chance that poor security selection will cause the portfolio to underperform relevant benchmarks or other funds with a similar investment objective.

25. The following charts compare advisory fees, other expenses, total operating expenses (before and after any waivers and reimbursements), and portfolio turnover rates for the year ended December 31, 2006, expressed as an annual percentage of average daily net assets, of the Replaced and Replacement Portfolios. Although Replacement Portfolio A is subject to a distribution (12b–1) fee of the Act, and none currently applies to Replaced Portfolio A, the net operating expenses for Replacement Portfolio A are still significantly less than the total operating expenses for Replaced Portfolio A.[2] Neither the Replaced Portfolios nor the Replacement Portfolios impose a redemption fee.

	Replaced Portfolio A	Replacement Portfolio A
	Federated Quality Bond Fund II (percent)	Fidelity VIP Investment Grade Bond Portfolio (percent)
Advisory Fee	0.60	0.32
Distribution (12b–1) Fee	0.25	[a] 0.10
Other Expenses	0.39	0.12
Total Operating Expenses	1.24	0.54
Less Expense Waivers and Reimbursements	[b] 0.54	N/A
Net Operating Expenses	0.70	0.54
Portfolio Turnover Rate	64	34

[a] With regard to Replacement Portfolio A, its Service Class is authorized to pay a 12b–1 fee at an annual rate of 0.25% of its average net assets, or such lesser amount as the Portfolio's Trustees may determine from time to time. The Service Class currently pays a 12b–1 fee at an annual rate of 0.10% of its average net assets throughout the month. The 12b–1 fee rate may be increased only when the Trustees believe that it is in the best interests of variable product owners to do so.

[b] With regard to Replaced Portfolio A, the investment adviser waived and the distributor and shareholder services provider elected not to charge certain amounts. The investment adviser voluntarily waived a portion of the advisory fee which waiver the investment adviser may terminate at any time. The advisory fee paid by Replaced Portfolio A (after the voluntary waiver of the advisory fee) was 0.56% for the fiscal year ended December 31, 2006. Replaced Portfolio A did not pay or accrue the distribution (12b–1) fee during the fiscal year ended December 31, 2006. The prospectus for Replaced Portfolio A notes that there is no present intention for Replaced Portfolio A to pay or accrue a distribution (12b–1) fee during the fiscal year ended December 31, 2007. Also, Replaced Portfolio A did not pay or accrue the shareholder services fee/account administration fee during the fiscal year ended December 31, 2006. Total other expenses for Replaced Portfolio A (after the voluntary waiver of the shareholder services fee/account administration fee) were 0.14% for the fiscal year ended December 31, 2006.

[2] With regard to the Replaced Portfolios, the investment adviser for each Portfolio has entered into an agreement with the Company for the payment of a fee equal to an annual percentage of the assets of the Replaced Portfolio attributable to the Contracts for the performance of administrative services. With regard to Replacement Portfolio A, the investment adviser for the Portfolio and the Company have entered into a similar agreement, however, the fee payable under that agreement is significantly less than the fee payable under the agreement between the Company and the investment adviser for Replaced Portfolio A. With regard to Replacement Portfolio B, the investment adviser for the Portfolio and the Company have *not* entered into a similar agreement. As such, the Company will not receive revenue sharing payments from the investment adviser for Replacement Portfolio B.

	Replaced Portfolio B	Replacement Portfolio B
	Federated International Equity Fund II (percent)	Vanguard International Portfolio (percent)
Advisory Fee	1.00	0.39
Distribution (12b–1) Fee	N/A	N/A
Other Expenses	0.77	0.05
Total Operating Expenses	1.77	0.44
Less Expense Waivers and Reimbursements	[c] 0.28	N/A
Net Operating Expenses	1.49	0.44
Portfolio Turnover Rate	83	29

[c] With regard to Replaced Portfolio B, the administrator and shareholder services provider waived and/or elected not to charge certain amounts. Replaced Portfolio B did not pay or accrue a shareholder services fee during the fiscal year ended December 31, 2006. The prospectus for Replaced Portfolio B notes that there is no present intention for Replaced Portfolio B to pay or accrue a shareholder services fee during the fiscal year ended December 31, 2007. Also, the administrator voluntarily waived a portion of its fee which waiver the administrator may terminate at any time. Total other expenses for Replaced Portfolio B (after the voluntary waivers and reduction) were 0.49% for the fiscal year ended December 31, 2006.

26. The following tables compare the respective asset levels, expenses ratios (after expense waivers and reimbursements) and performance data for each Replaced Portfolio and each Replacement Portfolio for fiscal years 2004, 2005 and 2006.

	Net assets at end of period	Expense ratio (percent)	Total return (percent)
Federated Quality Bond Fund II			
2004	$518,023,000	0.70	3.62
2005	480,859,000	0.70	1.30
2006	390,738,000	0.70	4.15
Fidelity VIP Investment Grade Bond Portfolio			
2004	1,611,417,000	0.66	4.32
2005	1,649,333,000	0.58	2.08
2006	1,782,079,000	0.54	4.30
Federated International Equity Fund II			
2004	53,093,000	1.57	14.06
2005	58,700,000	1.58	9.08
2006	70,213,000	1.49	18.89
Vanguard International Portfolio			
2004	557,000,000	0.41	19.42
2005	840,000,000	0.41	16.31
2006	1,562,000,000	0.44	26.75

27. Replaced Portfolio A, which has a high concentration in corporate debt securities, is positioned on the conservative end of the risk/return spectrum for fixed income investment options and offered Contract owners a fixed income option with limited risk. Over the past seven years, Replaced Portfolio A has significantly underperformed its peers leading the Company to reassess the position of its fixed income investment option. In an attempt to improve overall returns for the fixed income investment option while still maintaining a relatively low level of risk, the Company decided to select a fixed income investment option which is more representative of the overall bond market. Applicants believe that Replacement Portfolio A meets this goal.

28. The Company selected Replaced Portfolio B to diversify the investment options under the Contract to include a portfolio selection that pursued international investment opportunities. The managers of Replaced Portfolio B pursue positive total return on assets invested primarily in equity securities of mid- to large-capitalization companies based outside the U.S. Over the past five years, however, Replaced Portfolio B has underperformed the Morgan Stanley Capital International, Europe, Australasia, Far East Index (''MSCI EAFE Index''), the benchmark used by Replaced Portfolio B as well as peer funds. Replacement Portfolio B uses a multiple manager approach to pursue long-term capital appreciation by investing primarily in non-U.S. growth stocks of large, stable companies diversified across countries that the investment managers believe demonstrate above-average growth potential. Although the overall characteristics of the assets of Replacement Portfolio B may differ from broad international stock indices, over the past five years, the performance of Replacement Portfolio B has, in each of the last three years, exceeded the performance of Replaced Portfolio B.

29. In the case of Replaced Portfolio A, performance has been in the bottom quartile for comparable funds over the last three years, and has been lower than

its benchmark for the past five years. In the case of Replaced Portfolio B, performance ranks in the bottom decile for comparable funds over the last 1-, 3-, and 5-year periods.

30. The stated investment objective, principal investment strategies and principal investment risks of the Replacement Portfolios are substantially similar to those of the Replaced Portfolios, so that Contract owners will have continuity in investment and risk expectations. The net expenses of each Replacement Portfolio is substantially less than those for the corresponding Replaced Portfolio for the year ended December 31, 2006, even after expense waivers and reimbursements for the Replaced Portfolio have been taken into account.

31. Replacement Portfolio A has a substantially identical investment objective as that of Replaced Portfolio A. Both pursue their investment objective by investing, under normal market conditions, in a diversified portfolio of investment grade fixed-income securities, consisting of corporate debt securities, U.S government issued mortgage-backed securities and U.S. Treasury and agency securities. Each retains the flexibility to invest in corporate debt securities of foreign issuers and in derivative instruments, such as options, futures and swap contracts.

32. The primary difference in the implementation of investment strategies of Replaced Portfolio A and Replacement Portfolio A manifest in the degree of flexibility exercised by their advisors in implementing the strategies. Replaced Portfolio A's investment advisor emphasizes an active trading approach and relies on a fundamental analysis of each company in making an investment decision while the investment advisor for Replacement Portfolio A uses the Lehman Brothers U.S. Aggregate Index (the ''Lehman Index'') as the primary guide to structure Replacement Portfolio A and select investments with the goal of managing Replacement Portfolio A to have an overall interest rate risk similar to the Lehman Index. Conversely, whereas Replaced Portfolio A's investment advisor invests exclusively in fixed-income securities rated investment grade, the investment advisor for Replacement Portfolio A is not so constrained and may invest up to 10 percent of Replacement Portfolio A's assets in lower quality debt securities, sometimes referred to as junk bond securities.

33. Notwithstanding some difference in the stated investment objectives of Replacement Portfolio B and Replaced Portfolio B, both emphasize capital appreciation as the primary investment objective and both follow substantially identical investment strategies to pursue their investment objectives. Both pursue their investment objectives by investing primarily in equity securities of well-capitalized companies based outside the United States that have favorable growth prospects. The investment advisor for Replaced Portfolio B and the investment advisors for Replacement Portfolio B each use an active management approach and rely on a combination of fundamental analysis of each company and an analysis of stock market and economic cycles before making an investment decision. None of the investment advisors are limited with respect to the countries and industries in which they may invest. Each investment advisor retains the flexibility to invest in securities issued by mid-cap and small-cap companies as well as securities of companies in emerging markets.

34. The primary difference in investment objectives of Replaced Portfolio B and Replacement Portfolio B manifests in the degree to which Replaced Portfolio B emphasizes income from portfolio securities as a secondary investment objective. In that regard, Replaced Portfolio B's investment advisor may purchase a security solely to generate income or for the potential to generate income without regard to capital appreciation whereas the investment advisors for Replacement Portfolio B would not purchase a security solely for that purpose. Replaced Portfolio B also places a slightly greater emphasis on investment in securities of mid-cap companies than Replacement Portfolio B.

35. Replacement Portfolio A has available to it transactional advantages attributable to achieved economies of scale greater than those of Replaced Portfolio A and has a significantly lower expense ratio than Replaced Portfolio A even after expense waivers and reimbursements for Replaced Portfolio A have been taken into account. Although Replacement Portfolio B has not yet achieved a level of assets equal to or greater than Replaced Portfolio B, Replacement Portfolio B has a significantly lower expense ratio than Replaced Portfolio B even after expense waivers and reimbursements for Replaced Portfolio B have been taken into account.

36. For Contract owners on the date of the proposed substitutions, the Company will reimburse, on the last business day of each fiscal period (not to exceed a fiscal quarter) during the twenty-four months following the date of the proposed substitutions, the subaccount investing in the Replacement Portfolio such that the sum of the Replacement Portfolio's operating expenses (taking into account fee waivers and expense reimbursements) and subaccount expenses for such period will not exceed, on an annualized basis, the sum of the corresponding Replaced Portfolio's operating expenses (taking into account fee waivers and expense reimbursements) and subaccount expenses for the fiscal year preceding the date of the proposed substitution. In addition, for twenty-four months following the proposed substitutions, the Company will not increase asset-based fees or charges for Contracts outstanding on the date of the proposed substitutions.

37. By the May 1, 2008 prospectuses for the Contracts and the Accounts, the Company will notify owners of the Contracts of their intention to take the necessary actions to carry out the proposed substitutions. The current prospectus for each Replacement Fund, as well as the current prospectuses for all other portfolios available as investment options available under the Contracts, will be bound together with the May 1, 2008 prospectuses for the Contracts and the Accounts.

38. The prospectuses for the Contracts will advise the Contract owners that from the date of the prospectus until the date of the proposed substitutions, the Company will not exercise any rights reserved by it under any Contract to impose additional charges for transfers until at least 30 days after the proposed substitutions. Similarly, the prospectus will disclose that, from May 1, 2008 until the date of the proposed substitutions, the Company will permit Contract owners to transfer Contract value out of each subaccount currently holding shares of a Replaced Portfolio to other subaccounts and the fixed account without those transfers being treated as transfers for purposes of determining the remaining number of transfers that may be permitted in the Contract year without a transfer charge. The prospectuses will also advise Contract owners that if the proposed substitutions are carried out, then each Contract owner affected by the substitutions will be sent a written notice (described immediately below) informing them of the facts and details of the substitutions.

39. Within five days after the proposed substitutions, Contract owners who are affected by the substitutions will be sent a written notice informing them that the substitutions were carried

out. The notice will also reiterate the facts that the Company: (1) Will not exercise any rights reserved by it under any of the Contracts to impose additional charges for transfers until at least 30 days after the proposed substitutions, and (2) will, for at least 30 days following the proposed substitutions, permit such Contract owners to transfer Contract values out of the subaccounts holding shares of the Replacement Portfolios to other subaccounts and the fixed account without those transfers being treated as transfers for purposes of determining the remaining number of transfers permitted in the Contract year without a transfer charge. The notice as delivered in certain jurisdictions may also explain that the right of a Contract owner to make transfers in connection with the proposed substitutions will not affect such Contract owner's right, under insurance regulations in those jurisdictions, to exchange his or her Contract for a fixed-benefit life insurance contract or a fixed-benefit annuity Contract during the 60 days following the substitutions.

40. The Company will carry out the proposed substitutions by redeeming shares of each Replaced Portfolio held by the Accounts for cash and applying the proceeds to the purchase of shares of the Replacement Portfolios. The proposed substitutions will take place at relative net asset value with no change in the amount of any Contract owner's Contract value or death benefit or in the dollar value of his or her investment in any of the Accounts. Contract owners will not incur any fees or charges as a result of the proposed substitutions, nor will their rights or the Company's obligations under the Contracts be altered in any way. All applicable expenses incurred in connection with the proposed substitutions, including brokerage commissions and legal, accounting, and other fees and expenses, will be paid by the Company. In addition, the proposed substitutions will not impose any tax liability on Contract owners. The proposed substitutions will not cause the Contract fees and charges currently being paid by existing Contract owners to be greater after the proposed substitutions than before the proposed substitutions.

Applicants' Legal Analysis

1. The Applicants request that the Commission issue an order pursuant to Section 26(c) of the Act approving the substitution by the Company of Service Class shares of Replacement Portfolio A for shares of Replaced Portfolio A, and the substitution of shares of Replacement Portfolio B for shares of Replaced Portfolio B held by the Accounts.

2. The Applicants assert that all the Contracts expressly reserve for the Company the right, subject to compliance with applicable law, to substitute shares of one fund or portfolio held by a subaccount of an Account for another. The prospectuses for the Contracts and the Accounts contain appropriate disclosure of this right.

3. Applicants maintain that Contract owners will be better served by the proposed substitutions and that the proposed substitutions are appropriate given the Replacement Portfolios, the Replaced Portfolios, and other investment options available under the Contracts. In the last three years, Replacement Portfolio A has had investment performance superior to that of Replaced Portfolio A, and Replacement Portfolio B has had investment performance superior to that of Replaced Portfolio B. In addition, Replacement Portfolio A has had substantially lower expenses over this same period than Replaced Portfolio A, and Replacement Portfolio B has had substantially lower expenses over this same period than Replaced Portfolio B.

4. Applicants believe that Replacement Portfolio A and Replaced Portfolio A are substantially the same in their stated investment objectives and principal investment strategies, and that Replacement Portfolio B and Replaced Portfolio B are substantially similar in their stated investment objectives and principal investment strategies, as to afford investors continuity of investment and risk.

5. Although each Replaced Portfolio benefits from an expense reimbursement arrangement that reduces the Portfolio's expenses, even after the reimbursement for each Replaced Portfolio has been taken into account, the expenses of the corresponding Replacement Portfolio are still significantly lower.

6. The Applicants represent that the proposed substitutions retain for Contract owners the investment flexibility that is a central feature of the Contracts. If the proposed substitutions are carried out, all Contract owners will be permitted to allocate purchase payments and transfer Contract values between and among the remaining subaccounts as they could before the proposed substitutions.

7. The Applicants maintain that the proposed substitutions are not the type of substitution that Section 26(c) was designed to prevent. Unlike traditional unit investment trusts where a depositor could only substitute an investment security in a manner which permanently affected all the investors in the trust, the Contracts provide each Contract owner with the right to exercise his or her own judgment and transfer Contract values into other subaccounts and the fixed account. Moreover, the Contracts will offer Contract owners the opportunity to transfer amounts out of the affected subaccounts into any of the remaining subaccounts without cost or disadvantage. The proposed substitutions, therefore, will not result in the type of costly forced redemption that Section 26(c) was designed to prevent.

Conclusion

Applicants submit that, for all the reasons stated above, the proposed substitutions are consistent with the protection of investors and the purposes fairly intended by the policy and provisions of the Act.

For the Commission, by the Division of Investment Management, under delegated authority.

Florence E. Harmon,

Deputy Secretary.

[FR Doc. E8–5919 Filed 3–24–08; 8:45 am]

BILLING CODE 8011–01–P

SECURITIES AND EXCHANGE COMMISSION

[Release No. 34–57519; File No. SR–CBOE–2008–29]

Self-Regulatory Organizations; Chicago Board Options Exchange, Incorporated; Notice of Filing and Immediate Effectiveness of Proposed Rule Change To Extend Two Pilot Programs

March 18, 2008.

Pursuant to Section 19(b)(1) of the Securities Exchange Act of 1934 (''Act'') [1] and Rule 19b–4 thereunder,[2] notice is hereby given that on March 13, 2008, the Chicago Board Options Exchange, Incorporated (''CBOE'' or ''Exchange'') filed with the Securities and Exchange Commission (''Commission'') the proposed rule change as described in Items I and II below, which Items have been substantially prepared by the Exchange. The Exchange filed the proposed rule change pursuant to Section 19(b)(3)(A) of the Act [3] and Rule 19b–4(f)(6) thereunder, which renders it effective upon filing with the Commission.[4] The

[1] 15 U.S.C. 78s(b)(1).

[2] 17 CFR 240.19b–4.

[3] 15 U.S.C. 78s(b)(3)(A).

[4] 17 CFR 240.19b–4(f)(6).

Commission is publishing this notice to solicit comments on the proposed rule change from interested persons.

I. Self-Regulatory Organization's Statement of the Terms of Substance of the Proposed Rule Change

CBOE proposes to amend its rules to extend for an additional year, until March 14, 2009, two existing pilot programs.

The text of the proposed rule change is available on the CBOE's Web site (*http://www.cboe.org/Legal*), at the Exchange's Office of Secretary, and at the Commission's Public Reference Room.

II. Self-Regulatory Organization's Statement of the Purpose of, and Statutory Basis for, the Proposed Rule Change

In its filing with the Commission, CBOE included statements concerning the purpose of, and basis for, the proposed rule change and discussed any comments it received on the proposed rule change. The text of these statements may be examined at the places specified in Item IV below. The Exchange has prepared summaries set forth in Sections A, B, and C below of the most significant aspects of such statements

A. Self-Regulatory Organization's Statement of the Purpose of, and Statutory Basis for, the Proposed Rule Change

1. Purpose

The purpose of this rule change is to extend for an additional year, until March 14, 2009, two existing pilot programs.

First, CBOE proposes to amend CBOE Rules 8.4(c)(i), 8.85, 8.91 and 8.93(vii) to extend, until March 14, 2009, the pilot programs that allow a Remote Market Maker (''RMM''), an Off-Floor DPM, and an e-DPM to have up to one separate affiliated Market-Maker physically present in the trading crowds where it operates as an RMM, Off-Floor DPM, or e-DPM, respectively. (Such Market-Makers would be required to trade on a separate membership.) [5]

Second, CBOE proposes to amend Rules 8.3(c)(viii) and 8.4(c)(ii) to extend, until March 14, 2009, the pilot program which allows a CBOE member or member firm to have multiple aggregation units operating as separate Market-Makers or RMMs within the same class, provided they satisfy certain criteria set forth in CBOE Rule 8.4(c)(ii)(A)–(C).[6]

CBOE initially proposed to extend these two pilot programs in its pending rule filing, SR–CBOE–2007–120, which filing proposes to amend CBOE rules relating Market-Makers and RMMs in various respects.[7] SR–CBOE–2007–120 has been published for comment in the **Federal Register**, and the comment period expires on March 21, 2008.[8] Because these pilot programs are scheduled to expire prior to when the comment period expires on SR–CBOE–2007–120 and the time by when the SEC may approve SR–CBOE–2007–120, CBOE determined to seek a one-year extension of the two pilot programs in this rule filing.

As noted in SR–CBOE–2007–120, CBOE believes that both of these two pilot programs have been successful, and CBOE has not experienced any negative effects with respect to the pilot programs. Accordingly, CBOE believes that the proposed rule change is designed to promote just and equitable principles of trade, and will enhance competition and liquidity in the option classes in which the market participants who participate in the pilot programs trade.

Finally, CBOE notes that these pilot programs were initially adopted, in part, due to CBOE's usage of an algorithm that allocates electronic trades, in whole or in part, in an equal percentage based on the number of market participants quoting at the best bid or offer—specifically CBOE's ultimate matching algorithm, ''UMA.'' In January 2008, CBOE determined to utilize a pro-rata algorithm, instead of UMA, as the applicable matching algorithm in all Hybrid classes. In the event CBOE determines to utilize the UMA algorithm in the future in a Hybrid option class, CBOE commits to providing data to the Commission relating to the pilot programs which allow an RMM, an Off-Floor DPM, and an e-DPM to have up to one separate affiliated Market-Maker physically present in the trading crowds where it operates as an RMM, Off-Floor DPM, or e-DPM, respectively.

2. Statutory Basis

CBOE believes that the proposed rule change is consistent with Section 6(b) of the Act,[9] in general, and furthers the objectives of Section 6(b)(5) of the Act,[10] in particular, in that it is designed to prevent fraudulent and manipulative acts and practices, promote just and equitable principles of trade, remove impediments to and perfect the mechanisms of a free and open market and a national market system, and, in general, protect investors and the public interest.

B. Self Regulatory Organization's Statement on Burden on Competition

The Exchange does not believe that the proposed rule change will impose any burden on competition that is not necessary or appropriate in furtherance of the purposes of the Act.

C. Self-Regulatory Organization's Statement on Comments on the Proposed Rule Change Received from Members, Participants or Others

The Exchange has neither solicited nor received written comments on the proposed rule change.

III. Date of Effectiveness of the Proposed Rule Change and Timing for Commission Action

The Exchange has filed the proposed rule change pursuant to Section 19(b)(3)(A)(iii) of the Act [11] and Rule 19b–4(f)(6) thereunder.[12] Because the proposed rule change does not: (i) Significantly affect the protection of investors or the public interest; (ii) impose any significant burden on competition; and (iii) become operative prior to 30 days from the date on which it was filed, or such shorter time as the Commission may designate, if consistent with the protection of investors and the public interest, the proposed rule change has become effective pursuant to Section 19(b)(3)(A) of the Act and Rule 19b–4(f)(6)(iii) thereunder.[13]

[5] These pilot programs previously were extended for one year until March 14, 2008. *See* Securities Exchange Act Release No. 55438 (March 9, 2007), 72 FR 12642 (March 16, 2007) (SR–CBOE–2007–19) (granting immediate effectiveness to SR–CBOE–2007–19). *See also* Securities Exchange Act Release No. 55531 (March 26, 2007), 72 FR 15736 (April 2, 2007) (SR–CBOE–2006–94) (order allowing DPM's to operate away from CBOE's trading floor).

[6] This pilot program previously was extended for one year until March 14, 2008. *See* Securities Exchange Act Release No. 55474 (March 15, 2007), 72 FR 13324 (March 21, 2007) (SR–CBOE–2007–20) (granting immediate effectiveness to SR–CBOE–2007–20).

[7] Among other changes, SR–CBOE–2007–120 proposes to delete reference to RMMs in CBOE's rules, amend CBOE Rules 8.3 and 8.7 relating to the appointment of Market-Makers and Market-Maker obligations, respectively, and update or delete outdated provisions in other rules, including CBOE Rule 8.3A relating to Class Quoting Limits.

[8] *See* Securities Exchange Act Release No. 57367 (February 21, 2008), 73 FR 11168 (February 29, 2008) (SR–CBOE–2007–120).

[9] 15 U.S.C. 78f(b).

[10] 15 U.S.C. 78f(b)(5).

[11] 15 U.S.C. 78s(b)(3)(A)(iii).

[12] 17 CFR 240.19b–4(f)(6).

[13] Rule 19b–4(f)(6) also requires the Exchange to give the Commission written notice of its intent to file the proposed rule change along with a brief description and text of the proposed rule change, at least five business days prior to the date of filing of the proposed rule change, or such shorter time as designated by the Commission. The Exchange has satisfied the pre-filing requirement.

A proposed rule change filed under Rule 19b–4(f)(6) normally does not become operative prior to 30 days after the date of the filing. However, pursuant to Rule 19b–4(f)(6)(iii),[14] the Commission may designate a shorter time if such action is consistent with the protection of investors and the public interest. CBOE has asked the Commission to waive the 30-day operative delay so that the proposal may become operative immediately upon filing. The Exchange believes the waiver of this period will allow it to continue the pilot programs without undue delay, which it believes is in the public interest as it will avoid inconvenience and interruption to the public. The Commission believes such waiver is consistent with the protection of investors and the public interest because it presents no new issues and will allow the pilot programs to operate without interruption. For this reason, the Commission designates the proposal to be operative upon filing with the Commission.[15]

At any time within 60 days of the filing of the proposed rule change, the Commission may summarily abrogate such rule change if it appears to the Commission that such action is necessary or appropriate in the public interest, for the protection of investors, or otherwise in furtherance of the purposes of the Act.

IV. Solicitation of Comments

Interested persons are invited to submit written data, views and arguments concerning the foregoing, including whether the proposed rule change is consistent with the Act. Comments may be submitted by any of the following methods:

Electronic Comments

- Use the Commission's Internet comment form (*http://www.sec.gov/rules/sro.shtml*); or
- Send an e-mail to *rule-comments@sec.gov*. Please include File Number SR–CBOE–2008–29 on the subject line.

Paper Comments

- Send paper comments in triplicate to Nancy M. Morris, Secretary, Securities and Exchange Commission, 100 F Street, NE., Washington, DC 20549–1090.

All submissions should refer to File Number SR–CBOE–2008–29. This file number should be included on the subject line if e-mail is used. To help the Commission process and review your comments more efficiently, please use only one method. The Commission will post all comments on the Commission's Internet Web site (*http://www.sec.gov/rules/sro/shtml*). Copies of the submission, all subsequent amendments, all written statements with respect to the proposed rule change that are filed with the Commission, and all written communications relating to the proposed rule change between the Commission and any person, other than those that may be withheld from the public in accordance with the provisions of 5 U.S.C. 552, will be available for inspection and copying in the Commission's Public Reference Room, 100 F Street NE., Washington, DC 20549, on official business days between the hours of 10 a.m. and 3 p.m. Copies of such filing will also be available for inspection and copying at the principal office of CBOE. All comments received will be posted without change; the Commission does not edit personal identifying information from submissions. You should submit only information that you wish to make available publicly. All submissions should refer to File number SR–CBOE–2008–29 and should be submitted on or before April 15, 2008.

For the Commission, by the Division of Trading and Markets, pursuant to delegated authority.[16]

Florence E. Harmon,

Deputy Secretary.

[FR Doc. E8–5921 Filed 3–24–08; 8:45 am]

BILLING CODE 8011–01–P

[14] 17 CFR 240.19b–4(f)(6)(iii).

[15] For purposes only of waiving the 30-day pre-operative period, the Commission has considered the proposed rule's impact on efficiency, competition and capital formation. 15 U.S.C. 78c(f).

[16] 17 CFR 200.30–3(a)(12).

SECURITIES AND EXCHANGE COMMISSION

[Release No. 34–57524; File No. SR–Amex–2008–05]

Self-Regulatory Organizations; American Stock Exchange LLC; Notice of Filing and Order Granting Accelerated Approval to Proposed Rule Change as Modified by Amendment No. 1 Thereto Relating to Smaller Reporting Companies

March 18, 2008.

Pursuant to Section 19(b)(1)[1] of the Securities Exchange Act of 1934 (''Exchange Act'') and Rule 19b–4 thereunder,[2] notice is hereby given that on January 25, 2008, the American Stock Exchange LLC (''Amex'' or ''Exchange'') filed with the Securities and Exchange Commission (''Commission'') the proposed rule change as described in Items I and II below, which Items have been prepared by the Exchange. On March 13, 2008, Amex submitted Amendment No. 1 to the proposed rule change.[3] This order provides notice of the proposed rule change and approves the proposed rule change, as amended, on an accelerated basis.

I. Self-Regulatory Organization's Statement of the Terms of Substance of the Proposed Rule Change

The Exchange proposes to amend Sections 801, 802, 803, 807, and 809 of the Amex Company Guide (''Company Guide'') to conform to recent Commission amendments to rules and forms under the Securities Act of 1933[4] (''Securities Act'') and the Exchange Act relating to smaller reporting companies.

The text of the proposed rule change is available on the Amex's Web site at *http://www.amex.com*, the Office of the Secretary, the Amex and at the Commission's Public Reference Room.

II. Self-Regulatory Organization's Statement of the Purpose of, and Statutory Basis for, the Proposed Rule Change

In its filing with the Commission, the Exchange included statements concerning the purpose of and basis for the proposed rule change and discussed any comments it received on the proposed rule change. The text of these statements may be examined at the places specified in Item III below. The Exchange has prepared summaries, set forth in Sections A, B, and C below, of the most significant aspects of such statements.

A. Self-Regulatory Organization's Statement of the Purpose of, and the Statutory Basis for, the Proposed Rule Change

1. Purpose

The Commission recently adopted amendments to the disclosure and reporting requirements under the Securities Act and the Exchange Act in order to simplify and provide regulatory relief for smaller companies (the ''Smaller Reporting Company

[1] 15 U.S.C. 78s(b)(1).

[2] 17 CFR 240.19b–4.

[3] Amendment No. 1 replaced and superseded the original filing in its entirety. Amendment No. 1 was filed to make revisions to the rule filing and to the text of the proposed rule change to reflect recently approved changes to the Amex Company Guide. *See* Securities Exchange Act Release No. 57393 (February 27, 2008), 73 FR 11962 (March 5, 2008) (order approving SR–Amex–2007–79). Amendment No. 1 also made other, technical corrections.

[4] 15 U.S.C. 77(a) *et seq.*

Amendments'').[5] The Exchange proposes to amend the provisions of the Amex Company Guide (''Company Guide'') that refer to the small business issuer rules and forms under the Securities Act and the Act to make the references consistent with Smaller Reporting Company Amendments. At the same time, the Exchange proposes to amend or delete, in the relevant Company Guide sections, portions of those sections in the Company Guide that have become obsolete or otherwise need to be updated.

As described by Amex, the intent of the Smaller Reporting Company Amendments, which became effective on February 4, 2008, is to give smaller companies faster and easier access to capital when they need it or when market conditions are favorable. Specifically, the former ''small business issuer'' and ''non-accelerated filers'' categories, to the extent feasible, were combined to create a new expanded category called ''Smaller Reporting Company.'' Companies that have less than $75 million in public equity float will now qualify as Smaller Reporting Companies.[6] Companies without a calculable public equity float will qualify if their revenues were below $50 million in the last fiscal year.[7] The definition of Smaller Reporting Company effectively expands the number of companies that qualify for the scaled disclosure requirements previously available to small business issuers.[8]

In addition, the Regulation S–B [9] scaled disclosure requirements were integrated into Regulation S–K [10] as of the effective date of the Smaller Reporting Company Amendments, and Forms 10–QSB and 10–KSB [11] are being eliminated, effective October 31, 2008 and March 15, 2009, respectively.[12]

In order to conform the Amex Company Guide to the Smaller Reporting Company Amendments, the Exchange proposes to amend the following sections in its Company Guide:

Section 801. The Exchange proposes to amend Section 801(h) of the Company Guide to replace the reference to ''Small Business Issuer'' with a reference to ''Smaller Reporting Company,'' including a reference to the definition of Smaller Reporting Company in Item 10(f)(1) of Regulation S–K,[13] where the term Smaller Reporting Company is defined.

Section 802. The Exchange proposes to amend Section 802(a) of the Company Guide to remove the reference to ''Small Business Issuer'' and replace it with a reference to ''Smaller Reporting Company.'' However Amex will retain the cross-reference to Section 801(h) of the Company Guide for the definition of Smaller Reporting Company.

Section 803B(2)(a)(iii): The Exchange proposes to amend Section 803B(2)(a)(iii) of the Company Guide, which sets out the requirements for independent directors and audit committees for Amex-listed issuers, to update the references to Regulation S–K and Regulation S–B. Specifically, the Exchange proposes to remove the reference to Item 401(h) of Regulation S–K [14] and Item 401(e) of Regulation S–B [15] and replace it with a reference to Item 407(d)(5)(ii) [16] and Item 407(d)(5)(iii) [17] of Regulation S–K.

Section 803B(2)(c). The Exchange proposes to amend Section 803B(2)(c) of the Company Guide to remove and replace the reference to small business issuers with a reference to the new term, ''Smaller Reporting Companies,'' and to include a reference to Item 10(f)(1) of Regulation S–K,[18] where the term Smaller Reporting Company is defined. The independent director requirements (50% independent) and audit committee requirements (a minimum of two independent directors) that applied to small business issuers would now apply to issuers that qualify as Smaller Reporting Companies.

Section 803B(6)(a) and (b) and Commentary .10. The Exchange proposes to remove the last sentence of Section 803(6)(a), which states that the text of Rule 10A–3 is reproduced in Commentary .10 to Section 803, and to delete in its entirety Commentary .01 to Section 803, which sets out Rule 10A–3 in full. The Exchange originally included Rule 10A–3 in the Company Guide for the convenience of listed issuers at the time of the adoption of the Exchange's related rules in 2003, and the version of Rule 10A–3 now included in the Company Guide is out of date. The Exchange now believes that Rule 10A–3 has been in place for a long enough period that it is no longer necessary to include it in the Company Guide.

The Exchange proposes to amend Section 803B(6)(b) of the Company Guide to remove the references to ''Small Business Issuer'' and replace them with references to ''Smaller Reporting Company.'' As a result, the periods allowed to small business issuers set out in Section 803B(6) to cure a failure to comply with the audit committee composition requirements would now apply to issuers that qualify as Smaller Reporting Companies.

Section 807: The Exchange proposes to amend Section 807 of the Company Guide in order to remove the reference to the definition of the ''code of ethics'' set forth in Regulation S–B, which is no longer appropriate given the integration of the Regulation S–B [19] scaled disclosure requirements into Regulation S–K.

The Exchange also proposes to amend Commentary .01 to Section 807 of the Company Guide in order to conform the Amex provision regarding code of conduct waivers with the requirements of Section B of Form 8–K.[20] Accordingly, the Exchange proposes to change the time period in which a company must report a waiver of its code of conduct and ethics for directors or executive officers from five days to four days. The Exchange also proposes to make clear that if the event occurs on a Saturday, Sunday or holiday on which the Commission is not open for business, then the four business-day period shall begin to run on, and include, the first business day thereafter.[21]

Section 809. Section 809 of the Company Guide relates to the effective dates and transition terms for the corporate governance provisions now set out in Part 8 of the Company Guide. The Exchange proposes to revise Section 809 to remove references to effective dates and transition dates that have passed and are, therefore, no longer relevant. Specifically, sub-Sections 809(a), (d), (e) and (f) are proposed to be deleted in their entirety, and sub-Sections 809 (b) and (c) will become sub-Sections (a) and (b), respectively. Sub-Section 809(a) will be revised to replace references to ''small-business issuer'' with ''Smaller Reporting Company.'' Finally, the

[5] *See* Securities Exchange Act Release Nos. 33–8876; 34–56994; and 39–2451, 73 FR 934 (January 4, 2008) (File No. S7–15–07) (the ''Smaller Reporting Company Regulatory Relief and Simplification Release'').

[6] 17 CFR 230.405(1) and (2) and 17 CFR 240.12b–2.

[7] 17 CFR 230.405(3) and 17 CFR 240.12b–2.

[8] *See* the Smaller Reporting Company Regulatory Relief and Simplification Release.

[9] Formerly 17 CFR 228.10–228.703.

[10] 17 CFR 229.10–229.1123.

[11] 17 CFR 249.308b and 17 CFR 249.310b.

[12] *See* the Smaller Reporting Company Regulatory Relief and Simplification Release.

[13] 17 CFR 229.10(f)(1).

[14] 17 CFR 229.401(h).

[15] Formerly 17 CFR 228.401(e).

[16] 17 CFR 229.407(d)(5)(ii).

[17] 17 CFR 229.407(d)(5)(iii).

[18] 17 CFR 229.10(f)(1).

[19] Formerly 17 CFR 228.10–228.703.

[20] 17 CFR 249.308.

[21] The Commission notes that this language conforms to the language set forth in Paragraph B1 of Form 8–K.

Exchange proposes to delete Commentary .01, which re-stated Section 121 as it was in effect immediately prior to Commission approval of Section 809, in its entirety, since the transition periods that required its inclusion have expired.

2. Statutory Basis

The Exchange states that the proposed rule change is consistent with Section 6(b) of the Exchange Act [22] in general, and furthers the objectives of Section 6(b)(5) of the Exchange Act [23] in particular, in that it is designed to prevent fraudulent and manipulative acts and practices, to promote just and equitable principles of trade, to remove impediments to and perfect the mechanism of a free and open market and a national market system, and, in general, to protect investors and the public interest.

B. Self-Regulatory Organization's Statement on Burden on Competition

The proposed rule change does not impose any burden on competition that is not necessary or appropriate in furtherance of the purposes of the Exchange Act.

C. Self-Regulatory Organization's Statement on Comments on the Proposed Rule Change Received From Members, Participants or Others

No written comments were solicited or received with respect to the proposed rule change.

III. Solicitation of Comments

Interested persons are invited to submit written data, views, and arguments concerning the foregoing, including whether the proposed rule change is consistent with the Exchange Act. Comments may be submitted by any of the following methods:

Electronic Comments

- Use the Commission's Internet comment form (*http://www.sec.gov/rules/sro.shtml*); or
- Send an e-mail to *rule-comments@sec.gov*. Please include File Number SR–Amex–2008–05 on the subject line.

Paper Comments

- Send paper comments in triplicate to Nancy M. Morris, Secretary, Securities and Exchange Commission, 100 F Street, NE., Washington, DC 20549–1090.

All submissions should refer to File Number SR–Amex–2008–05. This file number should be included on the subject line if e-mail is used. To help the Commission process and review your comments more efficiently, please use only one method. The Commission will post all comments on the Commission's Internet Web site (*http://www.sec.gov/rules/sro.shtml*). Copies of the submission, all subsequent amendments, all written statements with respect to the proposed rule change that are filed with the Commission, and all written communications relating to the proposed rule change between the Commission and any person, other than those that may be withheld from the public in accordance with the provisions of 5 U.S.C. 552, will be available for inspection and copying in the Commission's Public Reference Room, 100 F Street, NE., Washington, DC 20549, on official business days between the hours of 10 a.m. and 3 p.m. Copies of such filing also will be available for inspection and copying at the principal office of Amex. All comments received will be posted without change; the Commission does not edit personal identifying information from submissions. You should submit only information that you wish to make available publicly. All submissions should refer to File Number SR–Amex–2008–05 and should be submitted on or before April 15, 2008.

IV. Commission's Findings and Order Granting Accelerated Approval of the Proposed Rule Change

The Commission finds that the proposed rule change is consistent with the requirements of the Act and the rules and regulations thereunder applicable to a national securities exchange.[24] In particular, the Commission finds that the proposed rule change is consistent with Section 6(b)(5) of the Exchange Act,[25] which requires, among other things, that the Exchange's rules be designed to prevent fraudulent and manipulative acts and practices, to promote just and equitable principles of trade, to remove impediments to and perfect the mechanism of a free and open market and a national market system, and, in general, to protect investors and the public interest.

The Commission believes that the proposed rule change is reasonable and appropriate because it would conform the rules governing a small issuer's eligibility for relief under specified provisions of the Exchange's corporate governance listing standards with the rules governing a small issuer's eligibility for relief pursuant to the Securities Act and the Exchange Act as recently amended. In addition, the proposed rule change would remove references in Amex's Company Guide that became obsolete in light of the Smaller Reporting Company Amendments or are otherwise outdated; and conform the Exchange's rule relating to disclosure of waiver of an issuer's code of conduct with the requirement of Form 8–K.

The Commission finds good cause, consistent with Section 19(b)(2) of the Exchange Act,[26] for approving this proposed rule change before the thirtieth day after the publication of notice thereof in the **Federal Register**. As noted by Amex, the Smaller Reporting Company Amendments became effective on February 4, 2008, and in the interest of timeliness and in order to avoid confusion, the Commission believes that accelerated approval is warranted and that no reasonable purpose would be served by delaying implementation of this and the other technical and conforming amendments made by the proposed rule change.

V. Conclusion

It is therefore ordered, pursuant to Section 19(b)(2) of the Exchange Act,[27] that the proposed rule change (SR–Amex–2008–05), as modified by Amendment No. 1, be, and it hereby is, approved on an accelerated basis.

For the Commission, by the Division of Trading and Markets, pursuant to delegated authority.[28]

Florence E. Harmon,

Deputy Secretary.

[FR Doc. E8–5917 Filed 3–24–08; 8:45 am]

BILLING CODE 8011–01–P

[22] 15 U.S.C. 78f(b).

[23] 15 U.S.C. 78f(b)(5).

[24] In approving this proposal, the Commission has considered its impact on efficiency, competition, and capital formation. *See* 15 U.S.C. 78c(f).

[25] 15 U.S.C. 78f(b)(5).

[26] 15 U.S.C. 78s(b)(2).

[27] *Id.*

[28] 17 CFR 200.30–3(a)(12).

SECURITIES AND EXCHANGE COMMISSION

[Release No. 34–57527; File No. SR–Amex–2007–129]

Self-Regulatory Organizations; American Stock Exchange LLC; Notice of Filing of a Proposed Rule Change Relating to an Exchange Member's Conduct of Doing Business With the Public

March 19, 2008.

Pursuant to Section 19(b)(1) of the Securities Exchange Act of 1934, as amended (''Act'') [1] and Rule 19b–4 thereunder,[2] notice is hereby given that on November 29, 2007, the American Stock Exchange LLC (''Amex'' or ''Exchange'') filed with the Securities and Exchange Commission (''SEC'' or ''Commission'') the proposed rule change as described in Items I and II below, which Items have been substantially prepared by the Exchange. The Commission is publishing this notice to solicit comments on the proposed rule change from interested persons.

I. Self-Regulatory Organization's Statement of the Terms of Substance of the Proposed Rule Change

The Amex proposes to amend certain Amex Rules that govern an Exchange member's conduct of doing business with the public. Specifically, the proposed rule change would require member organizations (also ''member firms'' or ''firms'') to integrate the responsibility for supervision of their public customer options business into its overall supervisory and compliance programs. In addition, the proposal would require member firms to strengthen their supervisory procedures and internal controls as related to their public customer options business.

The text of the proposed rule change is available at the Amex, the Commission's Public Reference Room and *http://www.amex.com.*

II. Self-Regulatory Organization's Statement of the Purpose of, and Statutory Basis for, the Proposed Rule Change

In its filing with the Commission, the Amex included statements concerning the purpose of, and basis for, the proposed rule change and discussed any comments it received on the proposed rule change. The text of these statements may be examined at the places specified in Item III below. The Amex has prepared summaries, set forth in sections A, B, and C below, of the most significant aspects of such statements.

A. Self-Regulatory Organization's Statement of the Purpose of, and the Statutory Basis for, the Proposed Rule Change

1. Purpose

a. Integration of Options Supervision

The purpose of the proposed rule change is to create a supervisory structure for options that is similar to that required by New York Stock Exchange, Inc. (''NYSE'') Rule 342 and National Association of Securities Dealers, Inc. (''NASD'') Rule 3010.[3] The proposed rule change would also conform Amex rules to those of the CBOE by eliminating the requirement that a member firm, qualified to do a public customer business in options, designate a single person to act as a Senior Registered Options Principal (''SROP'') for the member organization and that each such member organization designate a specific individual as a Compliance Registered Options Principal (''CROP'').[4] The Exchange proposes to eliminate the SROP and CROP supervisory categories, allowing member firms to supervise their options activities through their overall supervisory and compliance programs that monitor all other securities products.

The SROP concept was first introduced during the early years of development of the listed options market. Previously under Amex rules, member firms were required to designate one or more persons qualified as Registered Options Principals (''ROPs'') to have supervisory responsibilities with respect to the firms' options business. As the number of ROPs at larger firms began to increase, the Amex imposed an additional requirement that member firms designate one of their ROPs as the SROP. This was intended to eliminate confusion as to where the compliance and supervisory responsibilities lay by centralizing in a single supervisory officer overall responsibility for the supervision of a firm's options activities.[5] Subsequently, following the recommendation of the Special Study of the Options Market,[6] the Amex and the other options exchanges required firms to designate a CROP to be responsible for each firm's overall compliance program with respect to its options activities. The CROP could be the same person designated as a SROP, but while the CROP generally was not permitted to have sales functions in the firm, whereas the SROP was not so restricted.

Since the SROP and CROP requirements were first imposed, the supervisory function with respect to options activities of most securities firms has been integrated into their supervisory function matrix for securities activities overall. This not only reflects the maturity of the options market, but also recognizes the ways in which the uses of options themselves have become more integrated with other securities in the implementation of particular strategies. By permitting supervision of a firm's options activities to be handled in the same manner as the supervision of its securities and futures activities, the proposed rule change will ensure that supervisory responsibility over each segment of a firm's business is assigned to the best qualified persons in the firm, thereby enhancing the overall quality of supervision and compliance.

The proposed rule change will allow firms the flexibility to assign such supervisory and compliance responsibilities, which formerly resided with the SROP and/or CROP, to more than one individual. For example, the proposed rule change will permit a member firm to designate certain ROPs to be responsible for a variety of supervisory compliance functions such as approving acceptance of discretionary accounts [7]; approval of communications to customers [8] and exceptions to a member firm's suitability standards for trading uncovered short options.[9] Firms would be likely to do this in instances where the firm believes it advantageous to do so to enhance its supervisory or compliance structure. Typically, a firm may also wish to divide these functions on the basis of geographic region or functional considerations. Amex Rule 920 would be amended to clarify the qualification requirements of individuals designated as ROPs and also

[1] 15 U.S.C. 78s(b)(l).

[2] 17 CFR 240.19b–4.

[3] On July 26, 2007, the Commission approved a proposed rule change filed by NASD to amend NASD's Certificate of Incorporation to reflect its name change to Financial Industry Regulatory Authority, Inc., or FINRA, in connection with the consolidation of the member firm regulatory functions of NASD and NYSE Regulation, Inc. *See* Exchange Act Release No. 56146 (July 26, 2007), 72 FR 42190 (Aug. 1, 2007). The FINRA rule book currently consists of both NASD rules and certain NYSE rules that FINRA has incorporated.

[4] *See* Securities and Exchange Act Release No. 56492 (September 21, 2007) 72 FR 54952 (September 27, 2007) (SR–CBOE–2007–106).

[5] *Report of the Special Study of the Options Market (''Special Study''),* p. 316 note 11 (December 22, 1978).

[6] *Id.* at p. 335.

[7] *See* proposed Amex Rule 924(a) and Commentary .05 to Rule 920.

[8] *See* proposed Amex Rule 991(b).

[9] *See* proposed Amex Rule 921(g)(3).

to specify the registration requirements of individuals who accept orders from non-broker-dealer customers.

With respect to discretionary accounts, the proposal would require acceptance of such accounts to be assigned to individuals who are qualified ROPs. Further, the proposal would require that the individual who reviews the acceptance of a discretionary account (who is an individual other than the ROP who accepted the account as required by Amex Rule 924(a)) to be Series 4 qualified because such a review is not a routine sales supervisory function and requires more in-depth knowledge of options than what is covered by the Series 9/10 examination.[10] The proposed rule change would eliminate the requirement that discretionary options orders be approved on the day of entry by a ROP (with one exception as discussed below) because such requirement is not consistent with the use of supervisory tools in computerized format or exception reports generated after the close of trading day. No similar requirement exists for supervision of other securities accounts that are handled on a discretionary basis.[11] Discretionary orders would be required to be reviewed in accordance with a firm's written supervisory procedures. We believe the proposed rule change will ensure that supervisory responsibilities are assigned to specific qualified individuals, thereby enhancing the quality of supervision.

Amex Rule 924 would be revised by adding as Commentary .01, a requirement that any firm that does not utilize computerized surveillance tools for the frequent and appropriate review of discretionary account activity must establish and implement procedures to require ROP-qualified individuals (''Qualified Individuals'') who have been designated to review discretionary accounts to approve and initial each discretionary order on the day entered. The Exchange believes that any firm that does not utilize computerized surveillance tools to monitor discretionary account activity should continue to be required to perform the daily manual review of discretionary orders.

Under the proposed rule change, firms would continue to be required to designate Qualified Individuals to provide frequent appropriate supervisory review of options discretionary accounts.[12] This review includes the requirement that these Qualified Individuals review the accounts in order to determine whether the ROP accepting the account had a reasonable basis for believing that the customer was able to understand and bear the risks of the proposed strategies or transactions. This requirement provides an additional level of supervisory audit over options discretionary accounts that does not exist for other securities discretionary accounts.

In addition, the proposed change to Amex Rule 922 would require that each member organization provide for the preparation and submission of a written annual report to one or more of its control persons or, if the firm has no control person, to the audit committee of its board of directors or its equivalent group (collectively referred to as, ''Control Person''). The firm would be required to submit the report to the Exchange and to its Control Person by April 1st of each year. The firm would be required to detail in the report its supervision and compliance effort, including its options compliance program, during the preceding year and the adequacy of its ongoing compliance processes and procedures.[13]

Proposed Amex Rule 922(g) would further provide that a member organization that specifically includes its options compliance program in a report that complies with substantially similar NYSE and NASD rules will be deemed to have satisfied the requirements of Amex Rules 922(g) and 922(h).

Where appropriate, the proposed rule changes would delete references to SROP and CROP in Amex Rules 421, 920, 921, 922, 924 and 991.

Although the proposed rule change would eliminate entirely the positions and titles of SROP and CROP, firms would still be required to designate a single general partner or executive officer to assume overall authority and responsibility for internal supervision, control of the organization and compliance with securities laws and regulations.[14] A firm would also be required to designate specific qualified individuals as having supervisory or compliance responsibilities over each aspect of the firm's options activities and to set forth the names and titles of these individuals in its written supervisory procedures.[15]

The Exchange is a party to an options sales practice compliance plan, amended on March 26, 2007, entered into pursuant to Section 17(d) of the Securities Exchange Act of 1934 (the ''1934 Act'') and Rule 17d–2, promulgated thereunder.[16] For Exchange members that are also FINRA members, the amended plan allocates responsibility for examination and enforcement of members' compliance with options sales practice rules primarily to FINRA[17] (the ''Options 17d–2 Plan''). For non-FINRA members, the Options 17d–2 Plan provides that the exchange which is the Designated Examining Authority (''DEA''), pursuant to Rule 17d–1 under the Act, shall perform the regulatory responsibilities designated to it in the Options 17d–2 Plan. Under these provisions the Amex currently has responsibility for examination and enforcement of options sales practice rules as to three members (one of which is a dual member of the Philadelphia Stock Exchange and Amex and two Amex only members). FINRA will be primarily responsible for options sales practice examination and enforcement as to other dual members. In connection with the approval of these proposed changes, the Exchange intends to closely review written supervisory and compliance procedures of firms, for which it is the DEA, in the course of its routine examinations of member firms to ensure that supervisory and compliance responsibilities are adequately defined.

The Exchange believes the proposed rule changes will increase accountability and eliminate impractical and unrealistic supervisory standards applicable solely to listed options. The Exchange believes that the proposed rule changes are appropriate and will not materially alter the supervisory operations of firms.

Supervisory Procedures and Internal Controls

b. Supervisory Procedures and Internal Controls

The Exchange is also proposing to amend certain rules to strengthen member firms' supervisory procedures and internal controls relating to a member's public customer options business. The proposed rule changes discussed below are modeled after NYSE and NASD rules approved by the Commission in 2004.[18] The Exchange

[10] *See* supra note 5.

[11] *See, e.g.,* NYSE Rule 408.

[12] *See* proposed Amex Rule 924(a).

[13] *See* proposed Amex Rules 922(g) and 922(h), which are modeled after NYSE Rules 342.30 and 354, respectively.

[14] *See* proposed Amex Rule 922(a).

[15] *See* proposed Amex Rule 922(a).

[16] Securities Exchange Release Act No. 34–55532 (March 26, 2007) 72 FR 15729 (April 2, 2007).

[17] *See, infra,* note 3.

[18] *See* Securities Exchange Act Release Nos. 49882 (June 17, 2004), 69 FR 35108 (June 23, 2004) (SR–NYSE–2002–36) (approval order), 49883 (June 17, 2004), 69 FR 35092 (June 23, 2004) (SR–NASD–2002–162) (approval order).

believes its proposal to strengthen member supervisory procedures and internal controls is appropriate and consistent with the proposal discussed above to integrate the responsibility for supervision of a member firm's public customer options business into its overall supervisory and compliance program.

The Exchange is proposing to revise Amex Rule 922(a)(3) to require the development and implementation of written policies and procedures reasonably designed to supervise sales managers and other supervisory personnel who service customer options accounts.[19] This requirement would apply to branch office managers, sales managers, regional/district sales managers, or any person performing a similar supervisory function. Such policies and procedures are expected to encompass all options sales-related activities. Proposed Amex Rule 922(a)(3)(i) would require that supervisory reviews of producing sales managers be conducted by a qualified ROP who is either senior to, or otherwise ''independent of,'' the producing manager under review.[20] This provision is intended to ensure that all options sales activity of a producing manager is monitored for compliance with applicable regulatory requirements by persons who do not have a personal interest in such activity.

Proposed Amex Rule 922(a)(3)(ii) would provide an exception for firms so limited in size and resources that there is no qualified person senior to, or otherwise independent of, the producing manager to conduct the review. In this case, the review would be conducted by a qualified ROP to the extent practicable. Under proposed Amex Rule 922(a)(3)(iii), a member relying on the limited size and resources exception must document the factors used to determine that compliance with each of the ''senior'' or ''otherwise independent'' standards of proposed Amex Rule 922(a)(3)(i) is not possible, and that the required supervisory systems and procedures in place with respect to any producing manager comply with the provisions of proposed Amex Rule 922(a)(3)(i) to the extent practicable.[21]

Proposed Amex Rule 922(c)(i) would require member organizations to develop and maintain adequate controls over each of their business activities. The proposed rule would further require that such controls include the establishment of procedures to independently verify and test the supervisory systems and procedures for those business activities. A firm would be required to include in the annual report, prepared pursuant to proposed Amex Rule 922(g), a review of the firm's efforts in this regard, including a summary of the tests conducted and significant exceptions identified. The Exchange believes proposed Amex Rule 922(c)(i) would enhance the overall quality of each member organization's supervision and compliance function.[22]

Paragraph (d) of proposed Amex Rule 922 would establish requirements for branch office inspections similar to the requirements of NYSE Rule 342.24. Specifically Amex Rule 922(d) would require a member organization to inspect, at least annually, each supervisory branch office and inspect each non-supervisory branch office at least once every three years.[23] The proposed rule would further require persons who conduct a firm's annual branch office inspection to be independent of the direct supervision or control of the branch office (i.e., not the branch office manager, or any person who directly or indirectly reports to such manager, or any person to whom such manager directly reports). The Exchange believes that requiring branch office inspections to be conducted by someone who has no significant financial interest in the success of a branch office should lead to more objective and vigorous inspections.

Under proposed Amex Rule 922(e), any firm seeking an exemption, pursuant to Rule 922(d)(1)(ii), from the annual branch office inspection requirement would be required to submit to the Exchange written policies and procedures for systematic risk-based surveillance of its branch offices, as defined in Rule 922(e). Proposed Amex Rule 922(f) would require the annual branch office inspection programs to include, at a minimum, testing and verification of specified internal controls.[24] Proposed Amex Rule 922(d)(3) would provide that a firm that complies with the requirements of NASD or the NYSE that are substantially similar to the requirements of Rules 922(d), (e) and (f) will be deemed to have met such requirements. The Exchange is also proposing to amend Commentary .04 of Amex Rule 922 to define ''branch office'' in a way that is substantially similar to the definition of branch office in NYSE Rule 342.10.

Proposed Amex Rule 922(g)(4) would require a firm to designate a Chief Compliance Officer (CCO). Proposed Rule 922(g)(5) would require each firm's Chief Executive Officer (CEO), or equivalent, to certify annually that the member organization has in place processes to (1) establish and maintain policies and procedures reasonably designed to achieve compliance with applicable Exchange rules and federal securities laws and regulations, (2) modify such policies and procedures as business, regulatory, and legislative changes and events dictate, and (3) test the effectiveness of such policies and procedures on a regular basis, the timing of which is reasonably designed to ensure continuing compliance with Exchange rules and federal securities laws and regulations.

Proposed Amex Rule 922(g)(5) would also require the CEO to attest (1) that he or she has conducted one or more meetings with the CCO in the preceding 12 months to discuss the compliance processes in proposed Rule 922(g)(5)(i), (2) that he or she has consulted with the CCO and other officers to the extent necessary to attest to the statements in the certification, and (3) that the compliance processes are evidenced in a report, reviewed by the CEO, CCO and such other officers as the member firm deems necessary to make the certification, that is provided to the member firm's board of directors and audit committee (if such committee exists).[25]

Under proposed Amex Rule 922(b)(2), a member, upon a customer's written instructions, may hold mail for a customer who will be away from his or her usual address for no longer than two months if the customer is on vacation or traveling, or three months if the customer is going abroad. This provision would help ensure that members that hold mail, for customers who are away from their usual addresses, do so only pursuant to the

[19] Proposed Amex Rule 922(a)(3) is modeled after NYSE Rule 342.19.

[20] An ''otherwise independent'' person is defined in proposed Amex Rule 922(a)(3)(i).

[21] Proposed Amex Rule 922(a)(3)(iv) would provide that a member organization that complies with the NYSE or NASD rules that are substantially similar to the requirements in Rules 922(a)(3)(i), (a)(3)(ii) and (a)(3)(iii) will be deemed to have met such requirements.

[22] Proposed Amex Rule 922(c)(i) is modeled after NYSE Rule 342.23. Paragraph (c)(ii) of proposed Amex Rule 922 would provide that a member organization that complies with NYSE or NASD rules that are substantially similar to the requirements in paragraph (c)(i) of proposed Amex Rule 922 will be deemed to have met such requirements.

[23] Proposed Amex Rules 922(d)(1)(i) and (ii) would provide members with two exceptions from the annual supervisory branch office inspection requirement.

[24] Proposed Rules 922(e) and (f) are modeled after NYSE Rules 342.25 and 342.26, respectively.

[25] Proposed Amex Rule 922(g)(5) is modeled after NASD Rule 3013 and NYSE Rule 342.30(e).

customer's written instructions and for a specified, relatively short period of time.[26]

Proposed Amex Rule 922(b)(3) would require that, before a customer options order is executed, the account name or designation must be placed upon the memorandum for each transaction. In addition, only a Qualified Individual would be permitted to approve any changes in account names or designations. The ROP would be required to document the essential facts relied upon in approving the changes and maintain the record in an easily accessible place. A member would be required to preserve any documentation which provides for an account designation change for a period of not less than three years, with the documentation preserved for the first two years in an easily accessible place, as the term ''easily accessible place'' is used in Rule 17a–4 of the Act.[27] The Exchange believes the proposed rule would help to protect account name and designation information from possible fraudulent activity.[28]

Amex Rule 924(d) allows firms to exercise time and price discretion on orders for the purchase or sale of a definite number of options contracts in a specified security. The Exchange proposes to amend Amex Rule 924(d) to limit the duration of this discretionary authority to the day it is granted, absent written authorization to the contrary. In addition, the proposed rule would require any exercise of time and price discretion to be reflected on the customer order ticket. The proposed one-day limitation would not apply to time and price discretion exercised for orders effected with or for an institutional account (as defined in Rule 924(d)) pursuant to valid Good-Till-Cancelled instructions issued on a ''not held'' basis. The Exchange believes that investors will receive greater protection by clarifying the time such discretionary orders remain pending.[29]

Overall, the Exchange believes the proposed rule changes recognize that options have become more integrated with other securities in the implementation of particular strategies, and thus should not continue to be regulated as though they are a new and experimental product. The Exchange further asserts that the supervisory and compliance structure in place for non-options products at most firms is not materially different from the structure in place for options. Accordingly, the Exchange submits that the proposed rule changes are appropriate and would not materially alter the supervisory operations of member firms.

2. Statutory Basis

The Exchange believes that the proposed rule change is consistent with Section 6 of the Exchange Act[30] in general and furthers the objectives of Section 6(b)(5)[31] in particular in that it is designed to prevent fraudulent and manipulative acts and practices, to promote just and equitable principles of trade, to foster cooperation and coordination with persons engaged in facilitating transactions in securities, and to remove impediments to and perfect the mechanism of a free and open market and a national market system.

Specifically, the Exchange believes this proposed rule change would achieve these ends by integrating the supervision and compliance functions relating to member organizations' public customer options activities into their overall supervisory structure, thereby eliminating any uncertainty over where supervisory responsibility lies, and by fostering the strengthening of member organizations' internal controls and supervisory systems.[32]

B. Self-Regulatory Organization's Statement on Burden on Competition

The Exchange does not believe that the proposed rule change will impose any burden on competition not necessary or appropriate in furtherance of the Act.

C. Self-Regulatory Organization's Statement on Comments on the Proposed Rule Change Received From Members, Participants or Others

The Exchange did not solicit or receive any written comments on the proposed rule change.

III. Date of Effectiveness of the Proposed Rule Change and Timing for Commission Action

Within 35 days of the date of publication of this notice in the **Federal Register** or within such longer period (i) as the Commission may designate up to 90 days of such date if it finds such longer period to be appropriate and publishes its reasons for so finding or (ii) as to which the Exchange consents, the Commission will:

(A) By order approve such proposed rule change, or

(B) Institute proceedings to determine whether the proposed rule change should be disapproved.

IV. Solicitation of Comments

Interested persons are invited to submit written data, views and arguments concerning the foregoing, including whether the proposed rule change is consistent with the Act. Comments may be submitted by any of the following methods:

Electronic Comments

- Use the Commission's Internet comment form *http://www.sec.gov/rules/sro.shtml;* or
- Send an e-mail to *rulecomments@sec.gov.* Please include File No. SR–Amex–2007–129 on the subject line.

Paper Comments

- Send paper comments in triplicate to Nancy M. Morris, Secretary, Securities and Exchange Commission, 100 F Street, NE., Washington, DC 20549–1090.

All submissions should refer to File No. SR–Amex–2007–129. This file number should be included on the subject line if e-mail is used. To help the Commission process and review your comments more efficiently, please use only one method. The Commission will post all comments on the Commission's Internet Web site at *http://www.sec.gov/rules/sro.shtml.* Copies of the submission, all subsequent amendments, all written statements with respect to the proposed rule change that are filed with the Commission, and all written communications relating to the proposed rule change between the Commission and any person, other than those that may be withheld from the public in accordance with the provisions of 5 U.S.C. 552, will be available for inspection and copying in the Commission's Public Reference Room, 100 F Street, NE., Washington, DC 20549 on official business days between the hours of 10 a.m. and 3 p.m. Copies of such filing also will be available for inspection and copying at the principal office of the Exchange. All comments received will be posted without change; the Commission does not edit personal identifying information from submissions. You should submit only information that you wish to make available publicly. All submissions should refer to File Number SR–Amex–2007–129 and

[26] Proposed Amex Rule 922(b)(2) is modeled after NASD Rule 3110(i).

[27] 17 CFR 240.17a–4.

[28] Proposed Amex Rule 922(b)(3) is modeled after NASD 3110(j).

[29] Proposed Amex Rule 924(d) is modeled after NASD Rule 2510(d)(1).

[30] 15 U.S.C. 78f(b).

[31] 15 U.S.C. 78f(b)(5).

[32] Telephone call between Jeffrey Burns, Vice President and Associate General Counsel, Amex, and Haimera Workie, Branch Chief, Office of Chief Counsel, Division of Trading and Markets, SEC, on March 19, 2008.

should be submitted on or before April 15, 2008.

For the Commission, by the Division of Trading and Markets, pursuant to delegated authority.[33]

Florence E. Harmon,

Deputy Secretary.

[FR Doc. E8–5965 Filed 3–24–08; 8:45 am]

BILLING CODE 8011–01–P

SECURITIES AND EXCHANGE COMMISSION

[Release No. 34–57487; File No. SR–CBOE–2008–28]

Self-Regulatory Organizations; Chicago Board Options Exchange, Incorporated; Notice of Filing and Immediate Effectiveness of Proposal To Make Clean-Up Changes by Amending Certain Rules

March 13, 2008.

Pursuant to Section 19(b)(1) of the Securities Exchange Act of 1934 (''Act''),[1] and Rule 19b–4 thereunder,[2] notice is hereby given that on March 10, 2008, the Chicago Board Options Exchange, Incorporated (''Exchange'' or ''CBOE'') filed with the Securities and Exchange Commission (''Commission'') the proposed rule change as described in Items I and II below, which Items have been substantially prepared by the Exchange. The Exchange filed the proposal as a ''non-controversial'' proposed rule change pursuant to Section 19(b)(3)(A)(iii) of the Act[3] and Rule 19b–4(f)(6) thereunder,[4] which renders the proposal effective upon filing with the Commission. The Commission is publishing this notice to solicit comments on the proposed rule change from interested persons.

I. Self-Regulatory Organization's Statement of the Terms of Substance of the Proposed Rule Change

CBOE proposes to make clean-up changes by deleting certain portions of rules containing an obsolete term, replacing a reference to ''Nasdaq-100 Index Tracking Stock'' with ''PowerShares QQQ Trust,'' correcting mis-lettering, and making a spelling correction. The text of the rule proposal is available on the Exchange's Web site (*http://www.cboe.org/legal*), at the Exchange's Office of the Secretary and at the Commission.

[33] 17 CFR 200.30–3(a)(12).

[1] 15 U.S.C. 78s(b)(1).

[2] 17 CFR 240.19b–4.

[3] 15 U.S.C. 78s(b)(3)(A)(iii).

[4] 17 CFR 240.19b–4(f)(6).

II. Self-Regulatory Organization's Statement of the Purpose of, and Statutory Basis for, the Proposed Rule Change

In its filing with the Commission, the Exchange included statements concerning the purpose of and basis for the proposed rule change and discussed any comments it received on the proposed rule change. The text of these statements may be examined at the places specified in Item IV below. The Exchange has prepared summaries, set forth in Sections A, B, and C below, of the most significant aspects of such statements.

A. Self-Regulatory Organization's Statement of the Purpose of, and Statutory Basis for, the Proposed Rule Change

1. Purpose

CBOE proposes to make clean-up changes by deleting certain portions of rules containing an obsolete term, replacing a reference to ''Nasdaq-100 Index Tracking Stock'' with ''PowerShares QQQ Trust,'' correcting mis-lettering, and making a spelling correction. Deletion of Obsolete Term—''Board Broker''.

In 2005, the Exchange submitted a rule filing in which the Exchange proposed, among other things, to delete rules or portions thereof pertaining to Board Brokers.[5] As explained in that filing, the Exchange had not used Board Brokers for approximately 22 years, and did not intend to use them in the future. Accordingly, the Exchange proposed to delete several rules or portions thereof pertaining to Board Brokers.

In the 2005 filing, the Exchange inadvertently omitted Rules 3.1, 6.6, 6.73, 7.6 and 8.7, which still contain references to Board Brokers. In this filing, the Exchange proposes to delete portions of the aforementioned rules that contain references to Board Brokers for the reasons stated in the 2005 filing. Also, the Exchange proposes to make a spelling correction to Interpretation and Policy .01 to Rule 6.6.

[5] *See* Securities Exchange Act Release No. 52824 (November 22, 2005), 70 FR 72318 (December 2, 2005) (SR–CBOE–2005–69). In this filing, the Exchange explained that a Board Broker is an individual member, a nominee of a member organization or a member organization who or which is registered with the Exchange for the purposes of (i) acting as a ''broker's broker'' for specified classes of options, at the post at which such classes of options are traded, by accepting and attempting to execute orders placed with him by other members, and (ii) monitoring the market for such classes of options at the post.

Amend Rule 6.1.03 To Reflect Updated Exchange Traded Fund Name

In connection with the March 21, 2007 transfer of sponsorship of the Nasdaq-100 Trust, the name of the trust was changed from the ''Nasdaq-100 Index Tracking Stock'' to the ''PowerShares QQQ Trust'' (''QQQQ''). The Exchange proposes to amend Interpretation and Policy .03 to Rule 6.1 to reflect the updated name of the QQQQ.

Correct Mis-Lettering of Rule 4.11.02

The Exchange proposes to correct the mis-lettering of Interpretation and Policy .02 to Rule 4.11, which currently goes from c to e.

2. Statutory Basis

The Exchange believes that the proposed rule change is consistent with the requirements provided under Section 6(b)(5) of the Act,[6] that the rules of an exchange be designed to promote just and equitable principles of trade, to prevent fraudulent and manipulative acts and, in general, to protect investors and the public interest.

B. Self-Regulatory Organization's Statement on Burden on Competition

CBOE does not believe that the proposed rule change will impose any burden on competition that is not necessary or appropriate in furtherance of the purposes of the Act.

C. Self-Regulatory Organization's Statement on Comments on the Proposed Rule Change Received From Members, Participants, or Others

The Exchange neither solicited nor received comments on the proposal.

III. Date of Effectiveness of the Proposed Rule Change and Timing for Commission Action

The proposed rule change has become effective pursuant to Section 19(b)(3)(A) of the Act[7] and Rule 19b–4(f)(6) thereunder,[8] because the foregoing rule does not (i) Significantly affect the protection of investors or the public interest; (ii) impose any significant burden on competition; and (iii) become operative for 30 days from the date on which it was filed, or such shorter time as the Commission may designate if consistent with the protection of investors and the public interest.

A proposed rule change filed under Rule 19b–4(f)(6) normally does not become operative prior to 30 days after

[6] 15 U.S.C. 78(f)(b)(5).

[7] 15 U.S.C. 78s(b)(3)(A).

[8] 17 CFR 240.19b–4(f)(6).

the date of filing.[9] However, Rule 19b–4(f)(6)(iii) permits the Commission to designate a shorter time if such action is consistent with the protections of investors and the public interest.[10] The Exchange has requested that the Commission waive the 30-day operative date, so that the Exchange's rules may be updated as soon as possible to reflect the clean-up changes proposed in this filing. The Commission believes that the proposed rule change does not raise any new regulatory issues. For this reason, the Commission designates the proposal to be operative upon filing with the Commission.[11]

At any time within 60 days of the filing of such proposed rule change, the Commission may summarily abrogate such rule change if it appears to the Commission that such action is necessary or appropriate in the public interest, for the protection of investors, or otherwise in furtherance of the purposes of the Act.

IV. Solicitation of Comments

Interested persons are invited to submit written data, views, and arguments concerning the foregoing, including whether the proposed rule change is consistent with the Act. Comments may be submitted by any of the following methods:

Electronic Comments

- Use the Commission's Internet comment form (*http://www.sec.gov/rules/sro.shtml*); or
- Send an e-mail to *rule-comments@sec.gov*. Please include File Number SR–CBOE–2008–28 on the subject line.

Paper Comments

Send paper comments in triplicate to Nancy M. Morris, Secretary, Securities and Exchange Commission, 100 F Street, NE., Washington, DC 20549–1090.

All submissions should refer to File Number SR–CBOE–2008–28. This file number should be included on the subject line if e-mail is used. To help the Commission process and review your comments more efficiently, please use only one method. The Commission will post all comments on the Commission's Internet Web site (*http://www.sec.gov/rules/sro.shtml*). Copies of the submission, all subsequent amendments, all written statements with respect to the proposed rule change that are filed with the Commission, and all written communications relating to the proposed rule change between the Commission and any person, other than those that may be withheld from the public in accordance with the provisions of 5 U.S.C. 552, will be available for inspection and copying in the Commission's Public Reference Room, on official business days between the hours of 10 a.m. and 3 p.m. Copies of such filing also will be available for inspection and copying at the principal office of the CBOE. All comments received will be posted without change; the Commission does not edit personal identifying information from submissions. You should submit only information that you wish to make available publicly. All submissions should refer to File Number SR–CBOE–2008–28 and should be submitted on or before April 15, 2008.

For the Commission, by the Division of Trading and Markets, pursuant to delegated authority.[12]

Florence E. Harmon,

Deputy Secretary.

[FR Doc. E8–5918 Filed 3–24–08; 8:45 am]

BILLING CODE 8011–01–P

[9] *Id.*

[10] 17 CFR 240.19b–4(f)(6)(iii).

[11] For purposes of waiving the operative date of this proposal, the Commission has considered the proposed rule's impact on efficiency, competition and capital formation. 15 U.S.C. 78c(f).

[12] 17 CFR 200.30–3(a)(12).

SECURITIES AND EXCHANGE COMMISSION

[Release No. 34–57525; File No. SR–FINRA–2008–005]

Self-Regulatory Organizations: Financial Industry Regulatory Authority, Inc.; Notice of Filing of Proposed Rule Change Relating to Amendments to the Codes of Arbitration Procedure To Permit Submissions to Arbitrators After a Case Has Closed Under Limited Circumstances

March 18, 2008.

Pursuant to Section 19(b)(1) of the Securities Exchange Act of 1934 (''Act'')[1] and Rule 19b–4 thereunder,[2] notice is hereby given that on February 7, 2008, Financial Industry Regulatory Authority, Inc. (''FINRA'') (f/k/a National Association of Securities Dealers, Inc. (''NASD'')) filed with the Securities and Exchange Commission (''Commission'') the proposed rule change as described in Items I, II, and III below, which Items have been substantially prepared by FINRA. The Commission is publishing this notice to solicit comments on the proposed rule change from interested persons.

I. Self-Regulatory Organization's Statement of the Terms of Substance of the Proposed Rule Change

FINRA is proposing Rule 12905 of the NASD Code of Arbitration Procedure for Customer Disputes (''Customer Code'') and Rule 13905 of the NASD Code of Arbitration Procedure for Industry Disputes (''Industry Code'') to permit submissions to arbitrators after a case has closed only under the following circumstances: (1) As ordered by a court; (2) at the request of any party within 30 days of service of an award or notice that a matter has been closed, for ministerial matters; or (3) if all parties agree and submit documents within 30 days of service of an award or notice that a matter has been closed. Below is the text of the proposed rule change. All the text is new.

* * * * *

12905. Submissions After a Case Has Closed

(a) Parties may not submit documents to arbitrator(s) in cases that have been closed except under the following limited circumstances:

- As ordered by a court;
- At the request of any party within 30 days of service of an award or notice that a matter has been closed, for ministerial matters such as miscalculation of figures, mistake in the description of any person, thing or property referred to in the award, or if the award is imperfect in a matter of form that does not affect the decision on the merits; or
- If all parties agree and submit documents within 30 days of (1) service of an award or (2) notice that a matter has been closed.

(b) Parties must make requests under this rule in writing to the Director and must include the basis relied on under this rule for the request. The Director will forward the documents, along with any responses from other parties, to the arbitrators. Unless the arbitrators rule within 20 days after the Director forwards the documents to the arbitrators, the request shall be deemed denied.

13905. Submissions After a Case Has Closed

(a) Parties may not submit documents to arbitrator(s) in cases that have been closed except under the following limited circumstances:

- As ordered by a court;
- At the request of any party within 30 days of service of an award or notice that a matter has been closed, for

[1] 15 U.S.C. 78s(b)(1).

[2] 17 CFR 240.19b–4.

ministerial matters such as miscalculation of figures, mistake in the description of any person, thing or property referred to in the award, or if the award is imperfect in a matter of form that does not affect the decision on the merits; or

• If all parties agree and submit documents within 30 days of (1) service of an award or (2) notice that a matter has been closed.

(b) Parties must make requests under this rule in writing to the Director and must include the basis relied on under this rule for the request. The Director will forward the documents, along with any responses from other parties, to the arbitrators. Unless the arbitrators rule within 20 days after the Director forwards the documents to the arbitrators, the request shall be deemed denied.

* * * * *

II. Self-Regulatory Organization's Statement of the Purpose of, and Statutory Basis for, the Proposed Rule Change

In its filing with the Commission, FINRA included statements concerning the purpose of and basis for the proposed rule change and discussed any comments it received on the proposed rule change. The text of these statements may be examined at the places specified in Item IV below. FINRA has prepared summaries, set forth in sections A, B, and C below, of the most significant aspects of such statements.

A. Self-Regulatory Organization's Statement of the Purpose of, and Statutory Basis for, the Proposed Rule Change

1. Purpose

FINRA is proposing to amend its Customer Code and Industry Code to adopt new rules to permit submissions to arbitrators after a case has closed only under limited circumstances. The proposed rule change would reduce attorneys' fees and other costs associated with responding to such submissions and would support the finality of arbitration awards issued in the forum.

FINRA staff receives several requests each year from parties to submit documents to arbitrators (the panel) in cases that have been closed for long periods of time. Parties file these requests for a number of reasons, such as to obtain expungement relief that a party failed to request during the life of the case, to correct what a party perceives to be a mistake in the award, or to request that forum fee allocations be changed.

Currently, the Customer and Industry Codes do not contain deadlines for such submissions and, indeed, do not address the matter. Therefore, staff forwards to panels the requests, along with any responses from other parties, regardless of the time that has elapsed since the case was closed. The panels rarely determine to reopen a matter.

A case is deemed closed on the date FINRA serves an award or sends to the parties a letter notifying them that a case is closed (for example, by settlement). The absence of deadlines in the Customer and Industry Codes for submissions in closed cases can cause numerous problems. For example, parties might submit documents to the panel years after cases have closed. Also, arbitrators might have resigned from the roster or died by the time such submissions are made. Finally, parties might incur substantial attorneys' fees and other costs in responding to closed-case submissions.

Potential legal issues are also present. Some states empower arbitrators to correct technical or mathematical errors in their awards, but only for a short period of time following the award's issuance, and courts may remand a matter to the original arbitrators when they vacate awards in whole or in part.[3] Beyond these examples, however, the law generally provides that the arbitrators' authority ends when the arbitrators render their decisions.

To address the problems associated with submissions in closed cases, FINRA is proposing to permit submissions to arbitrators after a case has closed only under the following limited circumstances:

• As ordered by a court;

• At the request of any party within 30 days of service of an award or notice that a matter has been closed, for ministerial matters such as miscalculation of figures, mistake in the description of any person, thing or property referred to in the award, or if the award is imperfect in a matter of form that does not affect the decision on the merits; or

• If all parties agree and submit documents within 30 days of (1) service of an award or (2) notice that a matter has been closed.

The 30-day limit is in line with time limits allowed under many state laws[4] and would ensure that a majority of the arbitrators that served on the panel will be available to review the submissions. Under the second alternative, request by only one party, FINRA would follow its normal procedure of soliciting a response from the other parties before forwarding the request to the panel.

2. Statutory Basis

FINRA believes that the proposed rule change is consistent with the provisions of Section 15A(b)(6) of the Act,[5] which requires, among other things, that FINRA rules must be designed to prevent fraudulent and manipulative acts and practices, to promote just and equitable principles of trade, and, in general, to protect investors and the public interest. The proposed rule change would reduce the costs associated with responding to submissions in closed cases and support the finality of arbitration awards issued in the forum.

B. Self-Regulatory Organization's Statement on Burden on Competition

FINRA does not believe that the proposed rule change will result in any burden on competition that is not necessary or appropriate in furtherance of the purposes of the Act.

C. Self-Regulatory Organization's Statement on Comments on the Proposed Rule Change Received From Members, Participants, or Others

Written comments were neither solicited nor received.

III. Date of Effectiveness of the Proposed Rule Change and Timing for Commission Action

Within 35 days of the date of publication of this notice in the **Federal Register** or within such longer period (i) as the Commission may designate up to 90 days of such date if it finds such longer period to be appropriate and publishes its reasons for so finding or (ii) as to which the self-regulatory organization consents, the Commission will:

(A) By order approve such proposed rule change, or

(B) Institute proceedings to determine whether the proposed rule change should be disapproved.

IV. Solicitation of Comments

Interested persons are invited to submit written data, views and arguments concerning the foregoing, including whether the proposed rule change is consistent with the Act. Comments may be submitted by any of the following methods:

[3] *See* N.Y. CPLR 7509, 7511 (McKinney 2008).

[4] *Id.; see also*, CAL. CODE CIV. PROC. 1284 (2007); FLA. STAT. 682.10 (2007); TEX. CIV. PRAC. & REM. 171.054 (2007); VA. CODE ANN. 8.01–581.08 (2007).

[5] 15 U.S.C. 78o–3(b)(6).

Electronic Comments

- Use the Commission's Internet comment form (*http://www.sec.gov/rules/sro.shtml*); or
- Send an e-mail to *rule-comments@sec.gov*. Please include File Number SR–FINRA–2008–005 on the subject line.

Paper Comments

- Send paper comments in triplicate to Nancy M. Morris, Secretary, Securities and Exchange Commission, 100 F Street, NE., Washington, DC 20549–1090.

All submissions should refer to File Number SR–FINRA–2008–005. This file number should be included on the subject line if e-mail is used. To help the Commission process and review your comments more efficiently, please use only one method. The Commission will post all comments on the Commission's Internet Web site (*http://www.sec.gov/rules/sro.shtml*). Copies of the submission, all subsequent amendments, all written statements with respect to the proposed rule change that are filed with the Commission, and all written communications relating to the proposed rule change between the Commission and any person, other than those that may be withheld from the public in accordance with the provisions of 5 U.S.C. 552, will be available for inspection and copying in the Commission's Public Reference Room, 100 F Street, NE., Washington, DC 20549, on official business days between the hours of 10 a.m. and 3 p.m. Copies of such filing also will be available for inspection and copying at the principal office of FINRA.

All comments received will be posted without change; the Commission does not edit personal identifying information from submissions. You should submit only information that you wish to make available publicly. All submissions should refer to File Number SR–FINRA–2008–005 and should be submitted on or before April 15, 2008.

For the Commission, by the Division of Trading and Markets, pursuant to delegated authority.[6]

Florence E. Harmon,

Deputy Secretary.

[FR Doc. E8–5964 Filed 3–24–08; 8:45 am]

BILLING CODE 8011–01–P

[6] 17 CFR 200.30–3(a)(12) .

SECURITIES AND EXCHANGE COMMISSION

[Release No. 34–57529; File No. SR–FINRA–2008–009]

Self-Regulatory Organizations; Financial Industry Regulatory Authority, Inc.; Notice of Filing of Proposed Rule Change to the Code of Arbitration Procedure for Customer Disputes and the Code of Arbitration Procedure for Industry Disputes To Amend the Chairperson Eligibility Requirements

March 19, 2008.

Pursuant to Section 19(b)(1) of the Securities Exchange Act of 1934 (''Act'') [1] and Rule 19b–4 thereunder,[2] notice is hereby given that Financial Industry Regulatory Authority, Inc. (''FINRA'') (f/k/a National Association of Securities Dealers, Inc. (''NASD'')) filed with the Securities and Exchange Commission (''SEC'' or ''Commission'') on March 12, 2008, the proposed rule change as described in Items I, II, and III below, which Items have been substantially prepared by FINRA Dispute Resolution. The Commission is publishing this notice to solicit comments on the proposed rule change from interested persons.

I. Self-Regulatory Organization's Statement of the Terms of Substance of the Proposed Rule Change

FINRA Dispute Resolution is proposing to amend the chairperson eligibility requirements under NASD Rule 12400(c) of the Code of Arbitration Procedure for Customer Disputes (''Customer Code'') and NASD Rule 13400(c) of the Code of Arbitration Procedure for Industry Disputes (''Industry Code''). Below is the text of the proposed rule change. Proposed deletions are in brackets.

* * * * *

12400. Neutral List Selection System and Arbitrator Rosters

(a)–(b) No change.

(c) Eligibility for Chairperson Roster

In customer disputes, chairpersons must be public arbitrators. Arbitrators are eligible for the chairperson roster if they have completed chairperson training provided by NASD [or have substantially equivalent training or experience] and:

[Remainder of the rule unchanged.]

* * * * *

[1] 15 U.S.C. 78s(b)(1).

[2] 17 CFR 240.19b–4.

13400. Neutral List Selection System and Arbitrator Rosters

(a)–(b) No change.

(c) Eligibility for Chairperson Roster

Arbitrators are eligible to serve as chairperson of panels submitted for arbitration under the Code if they have completed chairpersons training provided by NASD [or have substantially equivalent training or experience] and:

[Remainder of the rule unchanged.]

* * * * *

II. Self-Regulatory Organization's Statement of the Purpose of, and Statutory Basis for, the Proposed Rule Change

In its filing with the Commission, FINRA included statements concerning the purpose of and basis for the proposed rule change and discussed any comments it received on the proposed rule change. The text of these statements may be examined at the places specified in Item IV below. FINRA has prepared summaries, set forth in Sections A, B, and C below, of the most significant aspects of such statements.

A. Self-Regulatory Organization's Statement of the Purpose of, and Statutory Basis for, the Proposed Rule Change

1. Purpose

FINRA [3] proposes to amend the chairperson eligibility requirements under Rule 12400(c) of the Customer Code and Rule 13400(c) of the Industry Code.

On January 24, 2007, the SEC approved the NASD Codes of Arbitration Procedure for Customer and Industry Disputes (collectively referred to as ''Codes'').[4] The Codes reorganized the dispute resolution rules into separate procedural codes, simplified the language of the old NASD Code of Arbitration Procedure, codified current practices, and implemented several substantive changes. One such substantive change involved improving the arbitrator selection process by creating and maintaining a new roster of arbitrators who are qualified to serve as chairpersons.

Under the Codes, arbitrators are eligible for the chairperson roster if they have completed chairperson training

[3] Although some of the events referenced in this rule filing occurred prior to the formation of FINRA, the rule filing refers to FINRA throughout for simplicity.

[4] *See* Securities Exchange Act Release No. 55158 (January 24, 2007); 72 FR 4574 (January 31, 2007) (File Nos. SR–NASD–2003–158 and SR–NASD–2004–011). The new Codes became effective on April 16, 2007.

provided by FINRA or have substantially equivalent training or experience, and satisfy one of two remaining requirements of the rule.[5] In the rule filing proposing this change, FINRA explained that ''substantially equivalent training or experience would include service as a judge or administrative hearing officer, chairperson training offered by another recognized dispute resolution forum, or the like. Decisions regarding whether particular training or experience other than FINRA chairperson training would qualify under this provision would be in the sole discretion of the Director.'' [6] In referring to the ''substantially equivalent training or experience'' criterion (hereinafter, ''substantially equivalent''), the proposal also stated that FINRA believed that the proposal would allow arbitrators of all professional backgrounds to qualify as chairpersons.[7] FINRA believed that this criterion would help ensure that the forum could meet the demands of the Codes concerning the new chairperson roster, while continuing to administer effectively the arbitrator selection process.

In the year since the Codes were approved, FINRA has determined that the ''substantially equivalent'' criterion has not been essential to creating and maintaining the chairperson roster, and is, therefore, proposing to remove this criterion from the rule. FINRA notes that all arbitrators currently coded as chairpersons have completed the FINRA Chairperson Training course (chair training),[8] and the chair training has never been waived for an arbitrator claiming to satisfy the ''substantially equivalent'' criterion. FINRA believes that all arbitrators wishing to serve as chairpersons would benefit from the information contained in the chair training, which instructs arbitrators on the added responsibilities of arbitrators assuming the essential role of chairperson in the FINRA forum. Moreover, FINRA believes that removing the ''substantially equivalent'' criterion would make the chairperson eligibility standards more objective and uniform, thereby eliminating any perception that large numbers of arbitrators may be added to the chairperson roster without the benefit of the chair training.

2. Statutory Basis

FINRA believes that the proposed rule change is consistent with the provisions of Section 15A(b)(6) of the Act, which requires, among other things, that FINRA rules must be designed to prevent fraudulent and manipulative acts and practices, to promote just and equitable principles of trade, and, in general, to protect investors and the public interest. FINRA believes that the proposed rule change would enhance investor confidence in the fairness and neutrality of FINRA's arbitration forum because the chairperson eligibility rules would become more objective and uniform.

B. Self-Regulatory Organization's Statement on Burden on Competition

FINRA does not believe that the proposed rule change will result in any burden on competition that is not necessary or appropriate in furtherance of the purposes of the Act, as amended.

C. Self-Regulatory Organization's Statement on Comments on the Proposed Rule Change Received From Members, Participants, or Others

Written comments were neither solicited nor received by FINRA.

III. Date of Effectiveness of the Proposed Rule Change and Timing for Commission Action

Within 35 days of the date of publication of this notice in the **Federal Register** or within such longer period (i) as the Commission may designate up to 90 days of such date if it finds such longer period to be appropriate and publishes its reasons for so finding or (ii) as to which the self-regulatory organization consents, the Commission will:

(A) By order approve such proposed rule change, or

(B) Institute proceedings to determine whether the proposed rule change should be disapproved.

IV. Solicitation of Comments

Interested persons are invited to submit written data, views, and arguments concerning the foregoing, including whether the proposed rule change is consistent with the Act. Comments may be submitted by any of the following methods:

Electronic Comments

- Use the Commission's Internet comment form (*http://www.sec.gov/rules/sro.shtml*); or
- Send an e-mail to *rule-comments@sec.gov*. Please include File Number SR–FINRA–2008–009 on the subject line.

Paper Comments

- Send paper comments in triplicate to Nancy M. Morris, Secretary, Securities and Exchange Commission, 100 F Street, NE., Washington, DC 20549–1090.

All submissions should refer to File Number SR–FINRA–2008–009. This file number should be included on the subject line if e-mail is used. To help the Commission process and review your comments more efficiently, please use only one method. The Commission will post all comments on the Commission's Internet Web site (*http://www.sec.gov/rules/sro.shtml*). Copies of the submission, all subsequent amendments, all written statements with respect to the proposed rule change that are filed with the Commission, and all written communications relating to the proposed rule change between the Commission and any person, other than those that may be withheld from the public in accordance with the provisions of 5 U.S.C. 552, will be available for inspection and copying in the Commission's Public Reference Room, 100 F Street, NE., Washington, DC 20549, on official business days between the hours of 10 a.m. and 3 p.m. Copies of such filings also will be available for inspection and copying at the principal office of FINRA. All comments received will be posted without change; the Commission does not edit personal identifying information from submissions. You should submit only information that you wish to make available publicly. All submissions should refer to the File Number SR-FINRA–2008–009 and should be submitted on or before April 15, 2008.

For the Commission, by the Division of Trading and Markets, pursuant to delegated authority.[9]

Florence E. Harmon,

Deputy Secretary.

[FR Doc. E8–5967 Filed 3–24–08; 8:45 am]

BILLING CODE 8011–01–P

[5] Rule 12400(c) of the Customer Code and Rule 13400(c) of the Industry Code.

[6] *See* Securities Exchange Act Release No. 51856 (June 15, 2005); 70 FR 36442, at 36446 (June 23, 2005).

[7] *Id.*

[8] The online Chairperson training course is $50 and is available at *http://www.finra.org/ArbitrationMediation/ResourcesforArbitratorsandMediators/ArbitratorTraining/ArbitratorTrainingPrograms/index.htm* (last visited, March 5, 2008).

[9] 17 CFR 200.30–3(a)(12).

SECURITIES AND EXCHANGE COMMISSION

[Release No. 34–57523; File No. SR–NYSE–2008–16]

Self-Regulatory Organizations; New York Stock Exchange LLC.; Notice of Filing and Immediate Effectiveness of Proposed Rule Change Relating to Rule 15 (Pre-Opening Indications)

March 18, 2008.

Pursuant to Section 19(b)(1) of the Securities Exchange Act of 1934 (''Act'')[1] and Rule 19b–4 thereunder,[2] notice is hereby given that on March 11, 2008, the New York Stock Exchange LLC (''NYSE'' or ''Exchange'') filed with the Securities and Exchange Commission (''Commission'') the proposed rule change as described in Items I and II below, which Items have been prepared substantially by NYSE. NYSE filed the proposed rule change pursuant to Section 19(b)(3)(A) of the Act[3] and Rule 19b–4(f)(6) thereunder,[4] which renders it effective upon filing with the Commission. The Commission is publishing this notice to solicit comments on the proposed rule change from interested persons.

I. Self-Regulatory Organization's Statement of the Terms of Substance of the Proposed Rule Change

The Exchange proposes to amend Exchange Rule 15 (Pre-Opening Indications) to: (1) Utilize the previous day's closing price on the NYSE in arranging opening transactions; (2) utilize the relevant price of the underlying security traded on its primary foreign market when arranging opening transactions for American Depositary Receipts (''ADRs'');[5] and (3) revise the price change parameters. The text of the proposed rule change is available at *http://www.nyse.com,* the Exchange, and the Commission's Public Reference Room.

II. Self-Regulatory Organization's Statement of the Purpose of, and Statutory Basis for, the Proposed Rule Change

In its filing with the Commission, NYSE included statements concerning the purpose of and basis for the proposed rule change and discussed any comments it received on the proposed rule change. The text of these statements may be examined at the places specified in Item IV below. NYSE has prepared summaries, set forth in Sections A, B, and C below, of the most significant aspects of such statements.

A. Self-Regulatory Organization's Statement of the Purpose of, and Statutory Basis for, the Proposed Rule Change

1. Purpose

The Exchange proposes to amend Exchange Rule 15 to: (1) Utilize the previous day's closing price on the NYSE in arranging opening transactions; (2) utilize the relevant price of the underlying security traded on its primary foreign market when arranging opening transactions for ADRs; and (3) revise the price change parameters.

Background

NYSE Rule 15 was last amended on December 20, 2007 to re-establish procedures for the publication of pre-opening price information, according to the framework established by the national market system plan (''Linkage Plan'').[6] The Exchange sought to amend Rule 15 in response to customer and market participant requests for the pre-opening price information.

Since the re-establishment of the procedures for the publication of pre-opening price information, the Exchange has reviewed the implementation of the rule and conferred with customers and market participants to assess the sufficiency and utility of the pre-opening price information currently being published. The Exchange seeks to amend NYSE Rule 15 to enable specialists to provide pre-opening information that is more accurate and indicative of the current state of the NYSE market.

Use of NYSE Closing Price

Currently, Rule 15 requires the specialist to publish a pre-opening price indication whenever the specialist, in arranging an opening transaction in any security, anticipates that the price of the opening transaction will be at a price which is different from the previous day's consolidated closing price by more than the ''applicable price change.'' The Exchange proposes to amend Rule 15 to use the NYSE closing price instead of the closing price of the Consolidated Tape.[6] Since the pre-opening indications of Rule 15 no longer provide intermarket indications, but are published solely as a means of providing information about trading on the NYSE, the Exchange believes it is more appropriate to use the NYSE closing price for the pre-opening indications to more precisely reflect the market conditions on the NYSE. Additionally, this proposed rule change is consistent with NYSE Rule 123D (Openings and Halts in Trading), which utilizes the NYSE previous closing price in determining the need for a mandatory indication.

Modifications of Price Groupings

When the procedures for the publication of pre-opening price information were reinstated, the current price groupings and corresponding price change parameters were broadened to more accurately address the volatility of today's markets. However, the Exchange believes that the recent amendment to the rule did not go far enough to distinguish the trading characteristics of the differently priced securities. The NYSE proposes to create five separate price groupings and related price change parameters. The Exchange believes that these smaller groupings and price change parameters better reflect the differences in price movement that occur based on the trading characteristics of the differently priced securities. The proposed five price groupings and their related applicable price change parameters are as follows:

Exchange closing price	Applicable price change (more than)
Under $20.00	$0.50
$20–$49.99	$1.00
$50–$99.99	$2.00
$100–$500	$5.00
Above $500	1.5%

Pre-Opening Price Indications, ADRs

The Exchange further believes that it is necessary to have a different procedure for pre-opening indications of ADRs. Where the trading day of the underlying security in its primary foreign market for an ADR concludes after trading on the NYSE for the previous day but before trading on the

[1] 15 U.S.C. 78s(b)(1).

[2] 17 CFR 240.19b–4.

[3] 15 U.S.C. 78s(b)(3)(A).

[4] 17 CFR 240.19b–4(f)(6).

[5] *See* the NYSE glossary, which defines an ADR as ''[a] receipt that is issued by a U.S. depository bank which represents shares of a foreign corporation held by the bank. * * * ADRs are quoted in U.S. dollars and trade just like any other stock. * * *''

[6] *See* Securities Exchange Act Release No. 57003 (December 20, 2007), 72 FR 73949 (December 28, 2007) (SR–NYSE–2007–112). The Linkage Plan became effective on October 1, 2006 and terminated on June 30, 2007. *See* Securities Exchange Act Release No. 54551 (September 29, 2006), 71 FR 59148 (October 6, 2006).

[6] *See* the NYSE glossary, which defines the Consolidated Tape as ''A high-speed system that continuously provides the last sale price and volume of any securities transaction in listed stocks to the public. All trades in NYSE-listed securities, regardless of the market center on which such trades occur, are reported to and disseminated on the ticker system.''

NYSE has opened the next day, use of the closing price for the underlying security in the primary foreign market is a better indicator of the current value of the underlying security when arranging the opening transaction of an ADR on the NYSE. Similarly, in instances where the underlying security of an ADR is still trading on its primary foreign market at the time the specialist is arranging the opening of such ADR on the NYSE, use of the NYSE previous day's closing price may result in the specialist issuing a pre-opening indication that does not adequately reflect the current price of the underlying security.

For example, assume the NYSE previous day's closing price of ADR XYZ was $28.00. On the following day the specialist is arranging the opening of the ADR XYZ on the NYSE. The primary foreign market for the underlying security XYZ is still open and the last sale price of the underlying security is equivalent to $30.00. If the specialist anticipates the opening price of ADR XYZ to be $28.49, according to Rule 15 as it exists today, the applicable price change that would require an indication is $.50; thus no indication would be required. However, this information is not reflective of the trading in the primary foreign market because the anticipated opening price is not on parity with underlying security XYZ trading on the primary foreign market.

Pursuant to this proposed rule change, however, a specialist will look at the last sale price of the underlying security in the primary foreign market and issue a pre-opening indication if the anticipated opening price of the ADR is not on parity with the last sale price of the underlying security. The pre-opening indication will be based on the change in parity between the anticipated opening price of the ADR and the last sale price of the underlying security on the primary foreign market. Thus, using the prior example, since the last sale price of the underlying security XYZ is equivalent to $30.00, there is a difference in parity of $1.51; thus, the specialist would issue a pre-opening indication based on the change in parity.

Accordingly, the Exchange proposes to amend Rule 15 to provide that in the case of an ADR, where the trading day of the underlying security in the primary foreign market concludes after trading on the NYSE for the previous day has ended, the specialists, when arranging an opening transaction on the NYSE, shall use the closing price of the primary foreign market of the underlying security to determine whether such opening transaction represents a change of more than the ''applicable price change.'' Where the primary foreign market on which the underlying security trades is open at the time of the opening on the Exchange, the specialist shall issue pre-opening indications based on a change from parity with the last sale price of the underlying security.

The Exchange believes this proposed rule change will enable specialists to provide more accurate and timely market information to all Exchange customers and market participants. Additionally, this proposed rule change will further consistency of Exchange rules by aligning Rule 15 with how specialists determine the need for indications pursuant to other Exchange Rules.

2. Statutory Basis

The Exchange believes that this proposal is consistent with Section 6(b) of the Act [7] in general, and furthers the objectives of Section 6(b)(5) of the Act [8] in particular, in that it is designed to promote just and equitable principles of trade, to remove impediments to and perfect the mechanism of a free and open market and a national market system and, in general, to protect investors and the public interest. This proposed rule change to Exchange Rule 15 supports the system of a free and open market and serves to protect investors and the public interest by ensuring that specialists disseminate more accurate information based on the most currently available pricing information when arranging opening transactions on the NYSE.

B. Self-Regulatory Organization's Statement on Burden on Competition

The Exchange does not believe that the proposed rule change will impose any burden on competition that is not necessary or appropriate in furtherance of the purposes of the Act.

C. Self-Regulatory Organization's Statement on Comments on the Proposed Rule Change Received From Members, Participants or Others

Written comments were neither solicited nor received.

III. Date of Effectiveness of the Proposed Rule Change and Timing for Commission Action

Because the foregoing proposed rule change does not:

(i) Significantly affect the protection of investors or the public interest;

(ii) impose any significant burden on competition; and

(iii) become operative for 30 days from the date on which it was filed, or such shorter time as the Commission may designate, if consistent with the protection of investors and public interest, it has become effective pursuant to Section 19(b)(3)(A) of the Act [9] and Rule 19b–4(f)(6) thereunder.[10]

Normally, a proposed rule change filed under 19b–4(f)(6) may not become operative prior to 30 days after the date of filing. However, Rule 19b–4(f)(6)(iii) [11] permits the Commission to designate a shorter time if such action is consistent with the protection of investors and the public interest. The Exchange has requested that the Commission waive the 30-day operative delay set forth in Rule 19b–4(f)(6)(iii) under the Act.[12] The Commission believes that the earlier operative date is consistent with the protection of investors and the public interest because the proposed rule change permits the Exchange to immediately implement changes to its pre-opening that should enable the specialists to disseminate more accurate pre-opening information that is indicative of the current state of the NYSE market. For these reasons, the Commission designates the proposal to be operative upon filing with the Commission.[13]

At any time within 60 days of the filing of the proposed rule change, the Commission may summarily abrogate such rule change if it appears to the Commission that such action is necessary or appropriate in the public interest, for the protection of investors, or otherwise in furtherance of the purposes of the Act.

IV. Solicitation of Comments

Interested persons are invited to submit written data, views, and arguments concerning the foregoing, including whether the proposed rule change is consistent with the Act. Comments may be submitted by any of the following methods:

[7] 15 U.S.C. 78f(b).

[8] 15 U.S.C. 78f(b)(5).

[9] 15 U.S.C. 78s(b)(3)(A).

[10] 17 CFR 240.19b–4(f)(6).

[11] 17 CFR 240.19b–4(f)(6). In addition, Rule 19b–4(f)(6)(iii) requires that a self-regulatory organization submit to the Commission written notice of its intent to file the proposed rule change, along with a brief description and text of the proposed rule change, at least five business days prior to the date of filing of the proposed rule change, or such shorter time as designated by the Commission. The Commission notes that NYSE has satisfied the five-day pre-filing notice requirement.

[12] 17 CFR 240.19b–4(f)(6)(iii).

[13] For purposes only of waiving the 30-day operative delay of this proposal, the Commission has considered the proposed rule's impact on efficiency, competition, and capital formation. 15 U.S.C. 78c(f).

Electronic Comments

- Use the Commission's Internet comment form (*http://www.sec.gov/rules/sro.shtml*); or
- Send an e-mail to *rule-comments@sec.gov*. Please include File Number SR–NYSE–2008–16 on the subject line.

Paper Comments

- Send paper comments in triplicate to Nancy M. Morris, Secretary, Securities and Exchange Commission, 100 F Street, NE., Washington, DC 20549–1090.

All submissions should refer to File Number SR–NYSE–2008–16. This file number should be included on the subject line if e-mail is used. To help the Commission process and review your comments more efficiently, please use only one method. The Commission will post all comments on the Commission's Internet Web site (*http://www.sec.gov/rules/sro.shtml*). Copies of the submission, all subsequent amendments, all written statements with respect to the proposed rule change that are filed with the Commission, and all written communications relating to the proposed rule change between the Commission and any person, other than those that may be withheld from the public in accordance with the provisions of 5 U.S.C. 552, will be available for inspection and copying in the Commission's Public Reference Room, 100 F Street, NE., Washington, DC 20549, on official business days between the hours of 10 a.m. and 3 p.m. Copies of such filing also will be available for inspection and copying at the principal office of NYSE. All comments received will be posted without change; the Commission does not edit personal identifying information from submissions. You should submit only information that you wish to make available publicly. All submissions should refer to File Number SR–NYSE–2008–16 and should be submitted on or before April 15, 2008.

For the Commission, by the Division of Trading and Markets, pursuant to delegated authority.[14]

Florence E. Harmon,

Deputy Secretary.

[FR Doc. E8–5916 Filed 3–24–08; 8:45 am]

BILLING CODE 8011–01–P

[14] 17 CFR 200.30–3(a)(12).

SECURITIES AND EXCHANGE COMMISSION

[Release No. 34–57521; File No. SR–NYSEArca–2008–27]

Self-Regulatory Organizations; NYSE Arca, Inc; Notice of Filing and Immediate Effectiveness of Proposed Rule Change to Delete NYSE Arca Rule 6.88—Pacific Options Exchange Trading System

March 18, 2008.

Pursuant to Section 19(b)(1) of the Securities Exchange Act of 1934 (''Act''),[1] and Rule 19b–4 thereunder,[2] notice is hereby given that on March 13, 2008, NYSE Arca, Inc. (''Exchange'' or ''NYSE Arca'') filed with the Securities and Exchange Commission (''Commission'') the proposed rule change as described in Items I and II below, which Items have been substantially prepared by NYSE Arca. NYSE Arca has designated this proposal as one that neither significantly affects the protection of investors or the public interest nor imposes any significant burden on competition, under Section 19(b)(3)(A)(ii) of the Act,[3] and Rule 19b–4(f)(6) thereunder,[4] which renders the proposal effective upon filing with the Commission. The Commission is publishing this notice to solicit comments on the proposed rule change from interested persons.

I. Self-Regulatory Organization's Statement of the Terms of Substance of the Proposed Rule Change

NYSE Arca is proposing to amend its rules to delete NYSE Arca Rule 6.88 because it has determined that rule to be obsolete. The text of the proposed rule change is available on the Exchange's Web site, *http://www.nyse.com*, at the principal office of the Exchange, and at the Commission's Public Reference Room.

II. Self-Regulatory Organization's Statement of the Purpose of, and Statutory Basis for, the Proposed Rule Change

In its filing with the Commission, NYSE Arca included statements concerning the purpose of, and basis for, the proposed rule change and discussed any comments it received on the proposed rule change. The text of these statements may be examined at the places specified in Item IV below. NYSE Arca has prepared summaries, set forth in Sections A, B, and C below, of the most significant aspects of such statements.

A. Self-Regulatory Organization's Statement of the Purpose of, and Statutory Basis for, the Proposed Rule Change

1. Purpose

Upon review of NYSE Arca Rule 6.88, the Exchange has determined that the rule is outdated and obsolete. This rule relates to options trading on the Pacific Options Exchange Trading System (''POETS''). The Exchange, however, no longer uses POETS for options trading. Therefore, the Exchange proposes to eliminate the text of this Rule and reserve the rule number for future use.

POETS was the Exchange's automated trading system comprised of the options order routing system, the automatic execution system (Auto-Ex), the on-line limit order book system (Auto-Book), and the automatic market quote update system (Auto-Quote). All functionality contained in the POETS system has been completely decommissioned. Its replacement, PCX Plus, was fully implemented as of March 2005.[5] Since then, the Exchange decommissioned PCX Plus and implemented its current options trading platform, the OX system, during the third quarter of 2006.[6] At the time POETS was decommissioned and PCX Plus was implemented, rules pertaining to POETS were eliminated, as obsolete, from the Exchange's rule set.[7] Rule 6.88 inadvertently remained within the Exchange's rule set without purpose or regulatory impact.

The Exchange has no plans to reactivate the POETS system; therefore, any rules governing its use are outdated and unnecessary. By eliminating the text of this rule, the Exchange hopes to eliminate any unnecessary confusion for its members.

2. Statutory Basis

The Exchange believes that the proposal is consistent with Section 6(b) of the Act,[8] in general, and Section 6(b)(5) of the Act,[9] in particular, in that it will promote just and equitable principles of trade, facilitate

[1] 15 U.S.C. 78s(b)(1).

[2] 17 CFR 240.19b–4.

[3] 15 U.S.C. 78s(b)(3)(A)(ii).

[4] 17 CFR 240.19b–4(f)(6).

[5] *See* Securities Exchange Act Release No. 47838 (May 13, 2003), 68 FR 27129 (May 19, 2003) (SR–PCX–2002–36) (order approving establishment of the PCX Plus system).

[6] *See* Securities Exchange Act Release No. 54238 (July 28, 2006), 71 FR 44758 (August 7, 2006) (SR–NYSEArca–2006–13) (order approving establishment of the OX trading platform system).

[7] *See* Securities Exchange Act Release No. 53221 (February 3, 2006), 71 FR 6811 (February 9, 2006) (SR–PCX–2005–102) (order approving elimination of obsolete rules related to POETS).

[8] 15 U.S.C. 78f(b).

[9] 15 U.S.C. 78f(b)(5).

transactions in securities, remove impediments to and perfect the mechanisms of a free and open market and a national market system, and protect investors and the public interest.

B. Self-Regulatory Organization's Statement on Burden on Competition

The proposed rule change does not impose any burden on competition that is not necessary or appropriate in furtherance of the purposes of the Act.

C. Self-Regulatory Organization's Statement on Comments on the Proposed Rule Change Received From Members, Participants, or Others

The Exchange has not solicited, and does not intend to solicit, comments on this proposed rule change. The Exchange has not received any unsolicited written comments from members or other interested parties.

III. Date of Effectiveness of the Proposed Rule Change and Timing for Commission Action

Because the foregoing rule does not (i) Significantly affect the protection of investors or the public interest; (ii) impose any significant burden on competition; and (iii) become operative for 30 days from the date on which it was filed, or such shorter time as the Commission may designate if consistent with the protection of investors and the public interest, it has become effective pursuant to Section 19(b)(3)(A) of the Act and Rule 19b–4(f)(6) thereunder.[10]

The Exchange has asked the Commission to waive the 30-day operative delay in order to allow the Exchange to remove an obsolete rule without delay. The Commission believes such waiver is consistent with the protection of investors and the public interest because the existing rule regarding the POETS system is obsolete and serves no purpose related to the administration of the Exchange.[11] Waiver of the 30-day operative delay specified in Rule 19b–4(f)(6) will allow the Exchange to update its Rules without delay. For these reasons, the Commission designates the proposals to be operative upon filing with the Commission.

At any time within 60 days of the filing of such proposed rule change, the Commission may summarily abrogate such rule change if it appears to the Commission that such action is necessary or appropriate in the public interest, for the protection of investors, or otherwise in furtherance of the purposes of the Act.

IV. Solicitation of Comments

Interested persons are invited to submit written data, views, and arguments concerning the foregoing, including whether the proposed rule change is consistent with the Act. Comments may be submitted by any of the following methods:

Electronic Comments

- Use the Commission's Internet comment form *http://www.sec.gov/rules/sro.shtml*); or
- Send an e-mail to *rule-comments@sec.gov*. Please include File No. SR–NYSEArca–2008–27 on the subject line.

Paper Comments

- Send paper comments in triplicate to Nancy M. Morris, Secretary, Securities and Exchange Commission, 100 F Street, NE., Washington, DC 20549–1090.

All submissions should refer to File Number SR–NYSEArca–2008–27. This file number should be included on the subject line if e-mail is used. To help the Commission process and review your comments more efficiently, please use only one method. The Commission will post all comments on the Commission's Internet Web site (*http://www.sec.gov/rules/sro.shtml*). Copies of the submission, all subsequent amendments, all written statements with respect to the proposed rule change that are filed with the Commission, and all written communications relating to the proposed rule change between the Commission and any person, other than those that may be withheld from the public in accordance with the provisions of 5 U.S.C. 552, will be available for inspection and copying in the Commission's Public Reference Room on official business days between the hours of 10 a.m. and 3 p.m. Copies of such filing also will be available for inspection and copying at the principal office of the Exchange. All comments received will be posted without change; the Commission does not edit personal identifying information from submissions. You should submit only information that you wish to make available publicly. All submissions should refer to File Number SR–NYSEArca–2008–27 and should be submitted on or before April 15, 2008.

For the Commission, by the Division of Trading and Markets, pursuant to delegated authority.[12]

Florence E. Harmon,

Deputy Secretary.

[FR Doc. E8–5912 Filed 3–24–08; 8:45 am]

BILLING CODE 8011–01–P

[10] 17 CFR 240.19b–4(f)(6). In addition, Rule 19b–4(f)(6)(iii) requires a self-regulatory organization to provide the Commission with written notice of its intent to file the proposed rule change, along with a brief description and text of the proposed rule change, at least five business days prior to the date of filing of the proposed rule change, or such shorter time as designated by the Commission. The Exchange has fulfilled this requirement.

[11] For purposes only of waiving the 30-day operative delay, the Commission has considered the proposed rule's impact on efficiency, competition, and capital formation. *See* 15 U.S.C. 78c(f).

[12] 17 CFR 200.30–3(a)(12).

SECURITIES AND EXCHANGE COMMISSION

[Release No. 34–57522; File No. SR–NYSEArca–2008–30)]

Self-Regulatory Organizations; NYSE Arca, Inc.; Notice of Filing and Immediate Effectiveness of Proposed Rule Change to Amend Rule 6.37B Pertaining to Market Maker Quotations

March 18, 2008.

Pursuant to Section 19(b)(1) of the Securities Exchange Act of 1934 (''Act'')[1] and Rule 19b–4 thereunder,[2] notice is hereby given that on March 14, 2008, NYSE Arca, Inc. (''NYSE Arca'' or ''Exchange'') filed with the Securities and Exchange Commission (''Commission'') the proposed rule change as described in Items I and II below, which Items have been substantially prepared by NYSE Arca. The Exchange has filed the proposal as a ''non-controversial'' rule change pursuant to Section 19(b)(3)(A) of the Act[3] and Rule 19b–4(f)(6) thereunder,[4] which renders it effective upon filing with the Commission. The Commission is publishing this notice to solicit comments on the proposed rule change from interested persons.

I. Self-Regulatory Organization's Statement of the Terms of Substance of the Proposed Rule Change

NYSE Arca proposes to amend NYSE Arca Rule 6.37B Market Maker Quotations—OX. The text of the proposed rule change is available at NYSE Arca, the Commission's Public Reference Room, and *http://www.nysearca.com.*

II. Self-Regulatory Organization's Statement of the Purpose of, and Statutory Basis for, the Proposed Rule Change

In its filing with the Commission, NYSE Arca included statements

[1] 15 U.S.C. 78s(b)(1).

[2] 17 CFR 240.19b–4.

[3] 15 U.S.C. 78s(b)(3)(A).

[4] 17 CFR 240.19b–4(f)(6).

concerning the purpose of, and basis for, the proposed rule change and discussed any comments it received on the proposed rule change. The text of these statements may be examined at the places specified in Item IV below. NYSE Arca has prepared summaries, set forth in Sections A, B, and C below, of the most significant aspects of such statements.

A. Self-Regulatory Organization's Statement of the Purpose of, and Statutory Basis for, the Proposed Rule Change

1. Purpose

The purpose of this rule change is to revise the review period the Exchange uses when determining a Market Maker's compliance with the 60% quoting obligations contained in NYSE Arca Rule 6.37B(c). The Exchange also proposes to add a provision to Rule 6.37B(c) that will deal with exceptions to Market Maker quoting obligations.

Market Makers, other than Lead Market Makers (''LMM''), are required to provide continuous two-sided quotations throughout the trading day in their appointed issues for 60% of the time that the Exchange is open for trading in each issue. Compliance with this obligation is presently measured on a per-calendar-quarter basis. The Exchange proposes to reduce the review period from a quarterly basis down to a monthly basis. The Exchange believes that this change is consistent with a recently approved rule change for LMM quoting obligations.[5] The Exchange believes that the shorter time period will allow the NYSE Arca Options Surveillance Department to more effectively monitor a Market Maker's compliance with their quoting obligations.

On occasion, a situation may arise where a Market Maker is unable to provide continuous quotations due to circumstances completely beyond his or her control. Accordingly, the Exchange proposes to amend Rule 6.37B(c) to state that if a technical failure or limitation of a system of the Exchange prevents a Market Maker from providing timely and accurate electronic quotes, the duration of such failure shall not be considered in determining whether the Market Maker has satisfied the 60% quoting standard. The Exchange may also take into consideration demonstrated legal or regulatory requirements or other mitigating circumstances that might prevent a Market Maker from providing continuous quotations. In order for the Exchange to consider any exceptions to quoting obligations, Market Makers must notify the Exchange promptly whenever circumstances arise that prevent them from providing continuous quotations. The Exchange notes that this proposed amendment is similar to NYSE Arca Rule 6.37B(b), which provides for limited exceptions to LMM quoting obligations.

The Exchange also proposes minor technical changes to Rule 6.37B. The Exchange states that the terms ''issue'' and ''class,'' when used in the context of a Market Maker's Appointment, are virtually interchangeable words. However, for the sake of consistency within Rule 6.37B, the Exchange proposes to use just the term ''issue.'' Accordingly, wherever the term ''class'' is used, it will now read ''issue.'' The Exchange also proposes a minor change to the numbering of subsections within the Rule.

2. Statutory Basis

The Exchange believes that the proposed rule change is consistent with Section 6(b) of the Act,[6] in general, and furthers the objectives of Section 6(b)(5) of the Act,[7] in particular, because it is designed to prevent fraudulent and manipulative acts and practices, to promote just and equitable principles of trade, to foster cooperation and coordination with persons engaged in facilitating transactions in securities, and to remove impediments to and perfect the mechanism of a free and open market and a national market system. The Exchange believes that this rule change will create a more efficient procedure for the Exchange to monitor quoting obligations of Market Makers, while at the same time providing relief for these obligations when a situation arises that is completely beyond the control of the Market Maker.

B. Self-Regulatory Organization's Statement on Burden on Competition

The Exchange does not believe that the proposed rule change will impose any burden on competition that is not necessary or appropriate in furtherance of the purposes of the Act.

C. Self-Regulatory Organization's Statement on Comments on the Proposed Rule Change Received From Members, Participants or Others

No written comments were solicited or received with respect to the proposed rule change.

III. Date of Effectiveness of the Proposed Rule Change and Timing for Commission Action

Because the foregoing rule change does not: (1) Significantly affect the protection of investors or the public interest; (2) impose any significant burden on competition; and (3) become operative for 30 days after the date of this filing, or such shorter time as the Commission may designate, it has become effective pursuant to Section 19(b)(3)(A) of the Act[8] and Rule 19b–4(f)(6) thereunder.[9]

A proposed rule change filed under 19b–4(f)(6) normally may not become operative prior to 30 days after the date of filing.[10] However, Rule 19b–4(f)(6)(iii)[11] permits the Commission to designate a shorter time if such action is consistent with the protection of investors and the public interest. The Exchange has requested that the Commission waive the 30-day operative delay. The Commission believes that waiving the 30-day operative delay is consistent with the protection of investors and the public interest because such waiver would allow the Exchange to implement the proposal without needless delay. The Commission notes that it recently approved a substantially similar NYSE Arca proposal pertaining to LMM quoting obligations.[12] For these reasons, the Commission designates the proposed rule change to be operative upon filing with the Commission.[13]

At any time within 60 days of the filing of such proposed rule change the Commission may summarily abrogate such rule change if it appears to the Commission that such action is necessary or appropriate in the public interest, for the protection of investors or otherwise in furtherance of the purposes of the Act.

IV. Solicitation of Comments

Interested persons are invited to submit written data, views, and arguments concerning the foregoing,

[5] *See* Securities Exchange Act Release No. 57186 (January 22, 2008), 73 FR 4931 (January 28, 2008) (SR–NYSEArca–2007–121).

[6] 15 U.S.C. 78f(b).

[7] 15 U.S.C. 78f(b)(5).

[8] 15 U.S.C. 78s(b)(3)(A).

[9] 17 CFR 240.19b–4(f)(6).

[10] 17 CFR 240.19b–4(f)(6)(iii). In addition, Rule 19b–4(f)(6)(iii) requires that a self-regulatory organization submit to the Commission written notice of its intent to file the proposed rule change, along with a brief description and text of the proposed rule change, at least five business days prior to the date of filing of the proposed rule change, or such shorter time as designated by the Commission. The Exchange has satisfied the five-day pre-filing notice requirement.

[11] *Id.*

[12] *See supra* note 5.

[13] For the purposes only of waiving the 30-day operative delay, the Commission has considered the proposed rule's impact on efficiency, competition, and capital formation. *See* 15 U.S.C. 78c(f).

including whether the proposed rule change is consistent with the Act. Comments may be submitted by any of the following methods:

Electronic Comments

- Use the Commission's Internet comment form (*http://www.sec.gov/rules/sro.shtml*); or
- Send an e-mail to *rule-comments@sec.gov.* Please include File Number SR–NYSEArca–2008–30 on the subject line.

Paper Comments

- Send paper comments in triplicate to Nancy M. Morris, Secretary, Securities and Exchange Commission, 100 F Street, NE., Washington, DC 20549–1090.

All submissions should refer to File Number SR–NYSEArca–2008–30. This file number should be included on the subject line if e-mail is used. To help the Commission process and review your comments more efficiently, please use only one method. The Commission will post all comments on the Commission's Internet Web site (*http://www.sec.gov/rules/sro.shtml*). Copies of the submission, all subsequent amendments, all written statements with respect to the proposed rule change that are filed with the Commission, and all written communications relating to the proposed rule change between the Commission and any person, other than those that may be withheld from the public in accordance with the provisions of 5 U.S.C. 552, will be available for inspection and copying in the Commission's Public Reference Room, 100 F Street, NE., Washington, DC 20549, on official business days between the hours of 10 a.m. and 3 p.m. Copies of the filing also will be available for inspection and copying at the principal office of NYSE Arca. All comments received will be posted without change; the Commission does not edit personal identifying information from submissions. You should submit only information that you wish to make available publicly. All submissions should refer to File Number SR–NYSEArca–2008–30 and should be submitted on or before April 15, 2008.

For the Commission, by the Division of Trading and Markets, pursuant to delegated authority.[14]

Florence E. Harmon,

Deputy Secretary.

[FR Doc. E8–5915 Filed 3–24–08; 8:45 am]

BILLING CODE 8011–01–P

[14] 17 CFR 200.30–3(a)(12).

SECURITIES AND EXCHANGE COMMISSION

[Release No. 34–57520; File No. SR–OCC–2008–02]

Self-Regulatory Organizations; The Options Clearing Corporation; Notice of Filing and Immediate Effectiveness of a Proposed Rule Change Relating to the Definition and Use of the Terms ''Settlement Price'' and ''Final Settlement Price''

March 18, 2008.

Pursuant to Section 19(b)(1) of the Securities Exchange Act of 1934 (''Act''),[1] notice is hereby given that on January 24, 2008, The Options Clearing Corporation (''OCC'') filed with the Securities and Exchange Commission (''Commission'') the proposed rule change as described in Items I, II, and III below, which items have been prepared primarily by OCC. OCC filed the proposed rule change pursuant to Section 19(b)(3)(A)(i) of the Act[2] and Rule 19b–4(f)(1)[3] thereunder so that the proposal was effective upon filing with the Commission. The Commission is publishing this notice to solicit comments on the proposed rule change from interested persons.

I. Self-Regulatory Organization's Statement of the Terms of Substance of the Proposed Rule Change

The proposed rule change amends the definition and use of the terms ''settlement price'' and ''final settlement price'' as applied to futures contracts cleared by OCC for the purpose of improving the definitions and establishing consistent usage.

II. Self-Regulatory Organization's Statement of the Purpose of, and Statutory Basis for, the Proposed Rule Change

In its filing with the Commission, OCC included statements concerning the purpose of and basis for the proposed rule change and discussed any comments it received on the proposed rule change. The text of these statements may be examined at the places specified in Item IV below. OCC has prepared summaries, set forth in sections (A), (B), and (C) below, of the most significant aspects of such statements.[4]

[1] 15 U.S.C. 78s(b)(1).

[2] 15 U.S.C. 78s–1(b)(3)(A)(i).

[3] 17 CFR 240.19b–4(f)(1).

[4] The Commission has modified parts of these statements.

(A) Self-Regulatory Organization's Statement of the Purpose of, and Statutory Basis for, the Proposed Rule Change

The primary purpose of the proposed rule change is to revise OCC's By-Laws and Rules to eliminate any inconsistencies in the use of the terms ''settlement price'' and ''final settlement price'' and to clarify the roles of OCC and of the exchanges on which futures are traded in determining the daily and if applicable intraday settlement price and the final settlement price of a series of futures contracts. OCC is also making one change in its rules to reflect a change in the services available to clearing members.

The two key components of the proposed rule change involve the definition of ''settlement price'' and ''final settlement price'' as used in OCC's By-Laws and Rules and the location of the language governing the manner in which settlement prices are determined. Currently, the prices used to calculate daily or intraday variation payments are referred to simply as ''settlement prices'' rather than ''interim settlement prices.'' The term ''settlement price'' does not encompass the term ''final settlement price,'' which is separately defined to refer only to the price used to determine the value of a contract at maturity. There are provisions of OCC's By-Laws and Rules that apply equally to daily or intraday settlement prices and final settlement prices. Accordingly, OCC is revising the definition of ''settlement price'' to encompass both types of prices. The term ''interim settlement price'' will be used to refer to prices used to determine daily and intraday variation payments. In addition, the definition of ''final settlement price'' is being revised in recognition of the possibility that prices determined in the futures markets themselves, as opposed to prices determined in the cash markets for the underlying interests, may sometimes be used to determine the final settlement price. OCC is also moving the language regarding the establishment of the interim settlement price for futures from Rule 1301(d) to Article XII, Section 6 of OCC's By-Laws. OCC believes that this language more logically belongs in Article XII, which currently governs only the establishment of final settlement prices.

Proposed Changes to By-Laws

OCC is introducing the new term ''interim settlement price'' in Article I, Section 1 of its By-Laws with respect to futures to refer to what is currently defined simply as ''settlement price''

and will use the term ''settlement price'' to encompass both interim settlement prices and final settlement prices for futures.

OCC is redefining and simplifying the term ''final settlement price'' in Article I, Section 1 of the By-Laws and eliminating the reference to ''Exchange Rules,'' which are relevant to some but not all determinations of the final settlement price and are referenced elsewhere in the By-Laws and Rules where relevant. The definition addresses what is meant by ''final settlement price'' with respect to a series of futures (*i.e.*, the marking price, rate, level, value, or measure of the designated interest on the maturity date of such series). It further addresses the uses of the final settlement price (*i.e.*, to calculate the final variation payment with respect to cash-settled futures and the purchase price of the underlying interest in respect of physically settled futures). The definition does not address the manner in which the final settlement price is determined, which is covered in Article XII, Section 6(b), as amended.

While the final settlement price of a series of stock futures is normally determined on the basis of the value of the underlying stock at maturity, at least one futures exchange clearing through OCC consistently uses the value of the futures contract itself (*i.e.*, the settlement price, on the maturity date as the basis for determining the final settlement price). Accordingly, in addition to the above changes, OCC is revising the term ''final settlement price'' to account for the use in some instances of the value of the futures contract rather than the value of the underlying interest in determining this price.

OCC is making certain technical corrections to the definition of the term ''maturity date.''

OCC is modifying Article VI, Section 10(d) of OCC's By-Laws, which currently refers to the adjustment of the unit of trading and settlement price for a series of stock futures, to reflect OCC's current procedures under which one or the other of the unit of trading or settlement price but not both is subject to adjustment. OCC is also correcting certain erroneous references in this subsection.

The term ''settlement price'' is used in various locations within Article VI, Section 19; Article XV, Section 3; and Article XX, Section 3 of OCC's By-Laws in a manner that is wholly unrelated to the settlement price for security futures. The word ''cash'' has been placed before the term ''settlement price'' in each these sections wherever the term appears.

OCC is making a correction to Article XII, Section 1 by replacing the term ''security future'' with ''future,'' which includes both commodity and security futures. Article XII, Section 3 is revised to reflect OCC's current procedures under which the unit of trading or settlement price but not both may be adjusted in connection with stock splits, stock dividends, and similar corporate events. OCC is modifying Article XII, Sections 4, 4A, and 5 under which the terms ''interim settlement price,'' ''final settlement price,'' and ''settlement price'' are used in a manner consistent with their new or revised definitions. OCC is moving the language governing the manner in which interim settlement prices are determined from Rule 1301(d) to Article XII, Section 6(a) to precede the provision governing the determination of final settlement prices covered in Section 6(b). As a result of the transfer of the content of Rule 1301(d) to Article XII, Section 6, this section now governs the manner in which both interim settlement prices and final settlement prices are determined while Rule 1301 addresses only variation payments.

In addition to moving the language of former Rule 1301(d) to Article XII, Section 6(a) of the By-Laws, OCC is modifying the language. The modifications make it clear that OCC determines the interim settlement price used to establish the amount of the required variation payment, but does so on the basis of an interim settlement price reported to OCC by the relevant exchange. A similar change is being made in Article XII, Section 6(b) and in Interpretation and Policy .01 to the section. Generally, OCC would simply adopt the price it receives from the exchange, but OCC has broad authority to disregard that price if it appears erroneous or otherwise defective. The changes also clarify OCC's responsibility in connection with settlement prices of series of security futures that are traded on more than one exchange.

Proposed Changes to Rules

OCC is deleting Rule 404, relating to its use of a give-up service provider, because OCC no longer has a relationship with a give-up service provider. OCC is redesignating Rule 1301(e) as Rule 1301(d) as a result of the transfer of former Rule 1301(d) to Article XII, Section 6 of the By-Laws. The portion of Rule 1301(e) governing the determination of final settlement prices is deleted as this subject is covered by Article XII, Section 6(b) of the By-Laws. Rule 1301 is also revised to make the use of the terms ''interim settlement price,'' ''final settlement price,'' and ''settlement price'' consistent with their new or revised definitions.

The proposed rule change is consistent with the purposes and requirements of Section 17A of Act because it is designed to promote the prompt and accurate clearance and settlement of transactions in futures, to foster cooperation and coordination with persons engaged in the clearance and settlement of such transactions, to remove impediments to and perfect the mechanism of a national system for the prompt and accurate clearance and settlement of such transactions, and in general to protect investors and the public interest. The proposed rule change accomplishes this purpose by establishing consistent usage for the terms ''settlement price'' and ''final settlement price'' and by revising the definition of ''final settlement price'' to account for the use in some instances of the prices determined in the futures markets themselves rather than the prices determined in the cash markets to determine the final settlement price for futures. The proposed rule change is not inconsistent with the By-laws and Rules of OCC, including those proposed to be amended.

(B) Self-Regulatory Organization's Statement on Burden on Competition

OCC does not believe that the proposed rule change would impose any burden on competition.

(C) Self-Regulatory Organization's Statement on Comments on the Proposed Rule Change Received from Members, Participants, or Others

Written comments were not and are not intended to be solicited with respect to the proposed rule change, and none have been received.

III. Date of Effectiveness of the Proposed Rule Change and Timing for Commission Action

The foregoing rule change has become effective pursuant to Section 19(b)(3)(A)(i) of the Act [5] and Rule 19b–4(f)(1) [6] promulgated thereunder because the proposal constitutes an interpretation with respect to the meaning, administration, or enforcement of an existing rule of OCC. At any time within sixty days of the filing of the proposed rule change, the Commission may summarily abrogate such rule change if it appears to the

[5] 15 U.S.C. 78s(b)(3)(A)(i).

[6] 17 CFR 240.19b–4(f)(1).

Commission that such action is necessary or appropriate in the public interest, for the protection of investors, or otherwise in furtherance of the purposes of the Act.

IV. Solicitation of Comments

Interested persons are invited to submit written data, views, and arguments concerning the foregoing, including whether the proposed rule change is consistent with the Act. Comments may be submitted by any of the following methods:

Electronic Comments

- Use the Commission's Internet comment form (*http://www.sec.gov/rules/sro.shtml*); or
- Send an e-mail to *rule-comments@sec.gov*. Please include File Number SR–OCC–2008–02 on the subject line.

Paper Comments

- Send paper comments in triplicate to Nancy M. Morris, Secretary, Securities and Exchange Commission, 100 F Street, NE., Washington, DC 20549–1090.

All submissions should refer to File Number SR–OCC–2008–02. This file number should be included on the subject line if e-mail is used. To help the Commission process and review your comments more efficiently, please use only one method. The Commission will post all comments on the Commission's Internet Web site (*http://www.sec.gov/rules/sro.shtml*). Copies of the submission, all subsequent amendments, all written statements with respect to the proposed rule change that are filed with the Commission, and all written communications relating to the proposed rule change between the Commission and any person, other than those that may be withheld from the public in accordance with the provisions of 5 U.S.C. 552, will be available for inspection and copying in the Commission's Public Reference Room, 100 F Street, NE., Washington, DC 20549, on official business days between the hours of 10 a.m. and 3 p.m. Copies of such filing also will be available for inspection and copying at the principal office of OCC. All comments received will be posted without change; the Commission does not edit personal identifying information from submissions. You should submit only information that you wish to make available publicly. All submissions should refer to File Number SR–OCC–2008–02 and should be submitted on or before April 15, 2008.

For the Commission by the Division of Trading and Markets, pursuant to delegated authority.[7]

Florence E. Harmon,

Deputy Secretary.

[FR Doc. E8–5911 Filed 3–24–08; 8:45 am]

BILLING CODE 8011–01–P

[7] 17 CFR 200.30–3(a)(12).

SECURITIES AND EXCHANGE COMMISSION

[Release No. 34–57528; File No. SR–Phlx–2008–18]

Self-Regulatory Organizations; Philadelphia Stock Exchange, Inc.; Notice of Filing and Order Granting Accelerated Approval of Proposed Rule Change Relating to the Imposition of Fines for Minor Rule Plan Violations

March 19, 2008.

Pursuant to Section 19(b)(1) of the Securities Exchange Act of 1934 (''Act'')[1] and Rule 19b–4 thereunder,[2] notice is hereby given that on March 12, 2008, the Philadelphia Stock Exchange, Inc. (''Phlx'' or ''Exchange'') filed with the Securities and Exchange Commission (''Commission'') the proposed rule change as described in Items I and II below, which Items have been prepared by the Phlx. The Commission is publishing this notice to solicit comments on the proposed rule change from interested persons and to approve the proposal on an accelerated basis.

I. Self-Regulatory Organization's Statement of the Terms of Substance of the Proposed Rule Change

The Exchange proposes to adopt Phlx Options Floor Procedure Advice (''OFPA'') F–35, Violations of Exercise and Exercise Advice Rules for Noncash-Settled Equity Option Contracts, to add a summary fine schedule for Expiring Exercise Declaration or Contrary Exercise Advice violations regarding noncash settled equity options.[3] The Exchange also proposes to modify Phlx Rule 970, Floor Practice Advices: Violations, Penalties, and Procedures,[4] to increase the maximum permissible fine to $5,000 for a violation of a Floor Procedure Advice. The text of the proposed rule change is available at the Exchange, the Commission's Public Reference Room, and *http://www.Phlx.com/exchange/phlx-rule-fil.htm*.

II. Self-Regulatory Organization's Statement of the Purpose of, and Statutory Basis for, the Proposed Rule Change

In its filing with the Commission, the Phlx included statements concerning the purpose of and basis for the proposed rule change and discussed any comments it received on the proposed rule change. The text of these statements may be examined at the places specified in Item III below. The Exchange has prepared summaries, set forth in sections A, B, and C below, of the most significant aspects of such statements.

A. Self-Regulatory Organization's Statement of the Purpose of, and Statutory Basis for, the Proposed Rule Change

1. Purpose

The Exchange proposes to (a) implement new OFPA F–35 to establish a fine schedule for contrary exercise advice violations, and (b) expand Phlx Rule 970 to allow fines not to exceed $5,000, for the purpose of increasing and strengthening the sanctions imposed by the Exchange's Minor Rule Plan (''MRP''). The Exchange believes that establishing the specified fines with respect to individual members and member organizations with a 24-month rolling surveillance period should serve as an effective deterrent to such violative conduct. The Exchange also believes that failure to submit exercise instructions is the type of objective requirement that is easy and appropriate to administer.

In addition, the Exchange, as a member of the Intermarket Surveillance Group (''ISG''),[5] as well as certain other self-regulatory organizations (''SROs'') executed and filed on October 29, 2007, with the Commission, a final version of an Agreement pursuant to Section 17(d)

[1] 15 U.S.C. 78s(b)(1).

[2] 17 CFR 240.19b–4.

[3] These declarations or advices indicate, among other things, whether at expiration the holder of an in-the-money noncash settled equity option intends to waive The Options Clearing Corporation's (''OCC'') Exercise-by-Exception procedure or exercise the option. *See* Phlx Rule 1042.

[4] Phlx Rule 970 sets forth the criteria for the imposition of fines (currently not to exceed $2,500) on any member, member organization, or any partner, officer, director, or person employed by or associated with any member or member organization, for any violation of a Floor Procedure Advice, which violation the Exchange shall have determined is minor in nature (known as ''Minor Rule Plan Fines''). The fines are imposed in lieu of commencing a ''disciplinary proceeding'' as that term is used in Phlx Rules 960.1–960.12. Such Minor Rule Plan Fines are subject to Rule 19d–1 under the Act. *See* Securities Exchange Act Release No. 45421 (February 7, 2002), 67 FR 6961 (February 14, 2002) (SR–Phlx–2001–114).

[5] ISG is a regulatory information-sharing organization comprised of all U.S. national securities exchanges and national securities associations, most U.S. futures exchanges, and certain non-U.S. exchanges and associations trading securities and related products.

of the Act (the ''17d–2 Agreement'').[6] As set forth in the 17d–2 Agreement, the SROs have agreed that their respective rules concerning the filing of Expiring Exercise Declarations, also referred to as Contrary Exercise Advices, of options contracts, are common rules. As a result, the proposal to amend Phlx's MRP will further result in consistency in sanctions among the SROs that are signatories to the 17d–2 Agreement concerning Contrary Exercise Advice violations.

2. Statutory Basis

The Exchange believes that this proposed rule change is consistent with Section 6(b) of the Act,[7] in general, and furthers the objectives of Section 6(b)(5) of the Act,[8] in particular, in that it is designed to prevent fraudulent and manipulative acts and practices, to promote just and equitable principles of trade, to remove impediments to and perfect the mechanism of a free and open market and a national market system, and, in general, to protect investors and the public interest.

Specifically, the Exchange believes that the proposed rule change should strengthen its ability to carry out its oversight responsibilities as an SRO and reinforce its surveillance and enforcement functions. Additionally, the Exchange believes that the proposed rule change should promote consistency in minor rule violation fines and respective SRO reporting obligations as set forth pursuant to Rule 19d–1(c)(2) under the Act,[9] which governs minor rule violation plans.

B. Self-Regulatory Organization's Statement on Burden on Competition

The Exchange does not believe that the proposed rule change will impose any burden on competition not necessary or appropriate in furtherance of the purposes of the Act.

C. Self-Regulatory Organization's Statement on Comments on the Proposed Rule Change Received From Members, Participants or Others

No written comments were solicited or received.

III. Solicitation of Comments

Interested persons are invited to submit written data, views, and arguments concerning the foregoing, including whether the proposed rule change is consistent with the Act. Comments may be submitted by any of the following methods:

Electronic Comments

- Use the Commission's Internet comment form at *http://www.sec.gov/rules/sro.shtml*; or
- Send an e-mail to *rule-comments@sec.gov*. Please include File No. SR–Phlx–2008–18 on the subject line.

Paper Comments

- Send paper comments in triplicate to Nancy M. Morris, Secretary, Securities and Exchange Commission, 100 F Street, NE., Washington, DC 20549–1090.

All submissions should refer to File No. SR–Phlx–2008–18. This file number should be included on the subject line if e-mail is used. To help the Commission process and review your comments more efficiently, please use only one method. The Commission will post all comments on the Commission's Internet Web site at *http://www.sec.gov/rules/sro.shtml*. Copies of the submission, all subsequent amendments, all written statements with respect to the proposed rule change that are filed with the Commission, and all written communications relating to the proposed rule change between the Commission and any person, other than those that may be withheld from the public in accordance with the provisions of 5 U.S.C. 552, will be available for inspection and copying in the Commission's Public Reference Room, 100 F Street, NE., Washington, DC 20549, on official business days between the hours of 10 a.m. and 3 p.m. Copies of such filing also will be available for inspection and copying at the principal office of the Exchange. All comments received will be posted without change; the Commission does not edit personal identifying information from submissions. You should submit only information that you wish to make available publicly. All submissions should refer to File No. SR–Phlx–2008–18 and should be submitted on or before April 15, 2008.

IV. Commission's Findings and Order Granting Accelerated Approval of Proposed Rule Change

After careful consideration, the Commission finds that the Exchange's proposed rule change is consistent with the requirements of Section 6 of the Act,[10] and the rules and regulations thereunder applicable to a national securities exchange.[11] In particular, the Commission believes that the proposed rule change is consistent with Section 6(b)(5) of the Act,[12] which requires, among other things, that the rules of a national securities exchange be designed to prevent fraudulent and manipulative acts and practices; to promote just and equitable principles of trade; to foster cooperation and coordination with persons engaged in regulating, clearing, settling, processing information with respect to, and facilitating transactions in securities; to remove impediments to and perfect the mechanism of a free and open market and a national market system; and, in general, to protect investors and the public interest.

The Commission further believes that Phlx's proposal to sanction individuals and member organizations who fail to submit Advice Cancel or exercise instructions in a timely manner is consistent with Sections 6(b)(1) and 6(b)(6) of the Act,[13] which require that the rules of an exchange enforce compliance with, and provide appropriate discipline for, violations of Commission and Exchange rules. In addition, the Commission finds that the proposal is consistent with the public interest, the protection of investors, or otherwise in furtherance of the purposes of the Act, as required by Rule 19d–1(c)(2) under the Act,[14] which governs minor rule violation plans. The Commission believes that the proposed rule change should strengthen the Exchange's ability to carry out its oversight and enforcement responsibilities as an SRO in cases where full disciplinary proceedings are unsuitable in view of the minor nature of the particular violation.

In approving this proposed rule change, the Commission in no way minimizes the importance of compliance with the Phlx's rules and all other rules subject to the imposition of fines under the MRP. The Commission believes that the violation of any SRO rules, as well as Commission rules, is a serious matter. However, the MRP provides a reasonable means of addressing rule violations that do not rise to the level of requiring formal disciplinary proceedings, while providing greater flexibility in handling certain violations. The Commission expects that the Phlx will continue to conduct surveillance with due diligence

[6] *See* Letter to Richard Holley, Division of Market Regulation, Securities and Exchange Commission, from Nyieri Nazarian, Assistant General Counsel, American Stock Exchange, October 29, 2007.

[7] 15 U.S.C. 78f(b).

[8] 15 U.S.C. 78f(b)(5).

[9] 17 CFR 240.19d–1(c)(2).

[10] 15 U.S.C. 78f.

[11] In approving this proposed rule change, the Commission has considered its impact on efficiency, competition, and capital formation. *See* 15 U.S.C. 78c(f).

[12] 15 U.S.C. 78f(b)(5).

[13] 15 U.S.C. 78f(b)(1) and 78f(b)(6).

[14] 17 CFR 240.19d–1(c)(2).

and make a determination based on its findings, on a case-by-case basis, whether a fine of more or less than the recommended amount is appropriate for a violation under the Phlx MRP or whether a violation requires formal disciplinary action.

The Phlx has requested that the Commission find good cause for approving the proposed rule change prior to the thirtieth day after publication of the notice thereof in the **Federal Register**. The Commission hereby grants that request. The Phlx's proposal is substantially similar to those of other options exchanges, which previously have been approved by the Commission.[15] The Commission does not believe that Phlx's proposal raises any novel regulatory issues, and no comments were received on any of these earlier proposals. Accordingly, the Commission finds good cause, pursuant to Section 19(b)(2) of the Act,[16] for approving the proposed rule change prior to the thirtieth day after publication of the notice thereof in the **Federal Register**.

V. Conclusion

It is therefore ordered, pursuant to Section 19(b)(2) of the Act[17] and Rule 19d–1(c)(2) under the Act,[18] that the proposed rule change (SR–Phlx–2008–18), be, and hereby is, approved and declared effective on an accelerated basis.

For the Commission, by the Division of Trading and Markets, pursuant to delegated authority.[19]

Florence E. Harmon,

Deputy Secretary.

[FR Doc. E8–5966 Filed 3–24–08; 8:45 am]

BILLING CODE 8011–01–P

[15] *See, e.g.*, Securities Exchange Act Release No. 57314 (February 12, 2008), 73 FR 9377 (February 20, 2008) (SR–CBOE–2007–143).

[16] 15 U.S.C. 78s(b)(2).

[17] 15 U.S.C. 78s(b)(2).

[18] 17 CFR 240.19d–1(c)(2).

[19] 17 CFR 200.30–3(a)(12); 17 CFR 200.30–3(a)(44).

SMALL BUSINESS ADMINISTRATION

Notice; Small Business Administration; Interest Rates

The Small Business Administration publishes an interest rate called the optional ''peg'' rate (13 CFR 120.214) on a quarterly basis. This rate is a weighted average cost of money to the government for maturities similar to the average SBA direct loan. This rate may be used as a base rate for guaranteed fluctuating interest rate SBA loans. This rate will be 4.375 (4⅜) percent for the April–June quarter of FY 2008.

Pursuant to 13 CFR 120.921(b), the maximum legal interest rate for any third party lender's commercial loan which funds any portion of the cost of a 504 project (see 13 CFR 120.801) shall be 6% over the New York Prime rate or, if that exceeds the maximum interest rate permitted by the constitution or laws of a given State, the maximum interest rate will be the rate permitted by the constitution or laws of the given State.

James W. Hammersley,

Acting Director, Office of Financial Assistance.

[FR Doc. E8–5946 Filed 3–24–08; 8:45 am]

BILLING CODE 8025–01–P

SOCIAL SECURITY ADMINISTRATION

Privacy Act of 1974; as Amended; New System of Records and New Routine Use Disclosures

AGENCY: Social Security Administration (SSA).

ACTION: Proposed New System of Records and Proposed Routine Uses.

SUMMARY: In accordance with the Privacy Act (5 U.S.C. 552a(e)(4) and (e)(11)), we are issuing public notice of our intent to establish a new system of records entitled *Identity Protection Program (IPP) System, 60–0360,* and routine uses applicable to this system of records. Hereinafter, we will refer to the proposed system of records as the *IPP System.* The proposed system of records will consist of information used to provide enhanced protection for employees who reasonably believe that they may be at risk of injury or other harm by the disclosure of their work location and telephone number information, supporting documentation, and the dispositions of the requests for program participation. We invite public comments on this proposal.

DATES: We filed a report of the proposed new system of records and proposed routine use disclosures with the Chairman of the Senate Committee on Homeland Security and Governmental Affairs, the Chairman of the House Committee on Government Reform, and the Director, Office of Information and Regulatory Affairs, Office of Management and Budget (OMB) on March 17, 2008. The proposed system of records and routine uses will become effective on April 26, 2008, unless we receive comments warranting it not to become effective.

ADDRESSES: Interested individuals may comment on this publication by writing to the Executive Director, Office of Public Disclosure, Office of the General Counsel, Social Security Administration, 3–A–6 Operations Building, 6401 Security Boulevard, Baltimore, Maryland 21235–6401. All comments received will be available for public inspection at the above address.

FOR FURTHER INFORMATION CONTACT: Ms. Edie McCracken, Social Insurance Specialist, Office of Public Disclosure, Office of the General Counsel, Social Security Administration, 3–A–6 Operations Building, 6401 Security Boulevard, Baltimore, Maryland 21235, telephone at (410) 965–6117, e-mail address at *edie.mccracken@ssa.gov.*

SUPPLEMENTARY INFORMATION:

I. Background and Purpose of the Proposed New System of Records Entitled the IPP System

A. General Background

We approved a recommendation from a national committee on security to implement a nationwide program to enhance the safety and security of our employees who are victims, or potential victims, of domestic violence. It was intended to safeguard the anonymity of at-risk employees when requests for their work location and/or phone number were received from individuals posing a threat to their personal safety, by delaying the disclosure of the information when certain conditions were met. This process would have entailed a change in our policy that permitted such information requests to be honored. While no action was ever taken on the recommendation, we amended our rules to reflect a similar approach that strengthened our privacy and disclosure rules to better safeguard employees who reasonably believe that they may be at risk of injury or other harm by the disclosure of their work location and telephone number.

B. Collection and Maintenance of the Data for the Proposed New System of Records Entitled the IPP System

SSA will collect and maintain information that will be housed in the *IPP System* from employees who have requested program participation in the IPP from SSA officials. The information maintained in this system of records will be maintained in paper and electronic formats and will include information on all IPP requests made by employees. This system contains such information as: (1) The employee's name, personal identification number (PIN), supporting documentation collected during the process, number of

requests made, whether those requests have been granted or denied; (2) the employee's locator information and telephone number; (3) the number of requests by Agency component that have been approved, and the number denied; (4) the reasons for denial; and (5) amount of time to process each request. We will retrieve information from the proposed system of records by using the employee's name and/or PIN. Thus, the *IPP System* constitutes a system of records under the Privacy Act.

II. Proposed Routine Use Disclosures of Data Maintained in the Proposed IPP System

A. Proposed Routine Use Disclosures

We are proposing to establish routine uses of information that will be maintained in the proposed *IPP System* as discussed below.

1. To the Office of the President for the purpose of responding to an individual pursuant to an inquiry received from that individual or from a third party on his or her behalf.

We will disclose information under this routine use only in situations in which an individual may contact the Office of the President, seeking that Office's assistance in a matter relating to information contained in this system of records. We will disclose information when the Office of the President makes an inquiry and indicates that it is acting on behalf of the individual whose record is requested.

2. To a congressional office in response to an inquiry from that office made at the request of the subject of a record.

We will disclose information under this routine use only in situations in which an individual may ask his or her congressional representative to intercede in a matter relating to information contained in this system of records. We will disclose information when the congressional representative makes an inquiry and indicates that he or she is acting on behalf of the individual whose record is requested.

3. To the Department of Justice (DOJ), a court or other tribunal, or another party before such tribunal when:

(a) SSA, or any component thereof; or

(b) any SSA employee in his/her official capacity; or

(c) any SSA employee in his/her individual capacity where DOJ (or SSA where it is authorized to do so) has agreed to represent the employee; or

(d) the United States or any agency thereof where SSA determines that the litigation is likely to affect the operations of SSA or any of its components, is a party to the litigation or has an interest in such litigation, and SSA determines that the use of such records by DOJ, a court or other tribunal, or another party before such tribunal is relevant and necessary to the litigation, provided, however, that in each case, SSA determines that such disclosure is compatible with the purpose for which the records were collected.

We will disclose information under this routine use only as necessary to enable DOJ to effectively defend SSA, its components or employees in litigation involving the proposed new system of records and ensure that courts and other tribunals have appropriate information.

4. To the Equal Employment Opportunity Commission (EEOC or Commission) when requested in connection with investigations into alleged or possible discriminatory practices in the Federal sector, examination of Federal affirmative employment programs, compliance by Federal agencies with the Uniform Guidelines on Employee Selection Procedures, or other functions vested in the Commission.

We will disclose information to the EEOC, as necessary, to assist in reassessing individuals' requests for program participation, to assist in investigations into alleged or possible discriminatory practices in the Federal sector, to combat and prevent fraud, waste and abuse under the Rehabilitation Act of 1973, and for other functions vested in the Commission.

5. To the Federal Labor Relations Authority, the General Counsel, the Federal Mediation and Conciliation Service, the Federal Service Impasses Panel, or an arbitrator when information is requested in connection with investigations of allegations of unfair labor practices, matters before an arbitrator or the Federal Impasses Panel.

We will disclose information about employees under this routine use, as necessary, to the Federal Labor Relations Authority, the General Counsel, the Federal Mediation and Conciliation Service, and the Federal Service Impasses Panel, or an arbitrator in which all or part of the allegations involve the Agency's providing program participation for at-risk employees.

6. To the Office of Personnel Management, Merit Systems Protection Board, or the Office of the Special Counsel, in connection with appeals, special studies of the civil service and other merit systems, review of those agencies' rules and regulations, investigation of alleged or possible prohibited personnel practices, and other such functions promulgated in 5 U.S.C. chapter 12, or as may be authorized by law.

We will disclose information under this routine use, as necessary, to the Office of Personnel Management, Merit Systems Protection Board or the Office of the Special Counsel in which all or part of the allegations in the appeal or action involve the Agency's providing program participation for at-risk employees or disapproving such participation.

7. To contractors and other Federal agencies, as necessary, for the purpose of assisting SSA in the efficient administration of its programs. We will disclose information under this routine use only in situations in which SSA may enter into a contractual or similar agreement with a third party to assist in accomplishing an Agency function relating to this system of records.

We will disclose information under this routine use only in situations in which SSA may enter into a contractual agreement or similar agreement with a third party to assist in accomplishing an Agency function relating to this system of records.

8. To student volunteers, individuals working under a personal services contract, and other individuals performing functions for SSA, who technically do not have the status of Agency employees, when they are performing work for SSA, as authorized by law, and they need access to the records in order to perform their assigned Agency functions.

Under certain Federal statutes, SSA is authorized to use the service of volunteers and participants in certain educational, training, employment and community service programs. Examples of such statutes and programs include: 5 U.S.C. 3111 regarding student volunteers and 42 U.S.C. 2753 regarding the College Work-Study Program. We contemplate disclosing information under this routine use only when SSA uses the services of these individuals and they need access to information in this system to perform their assigned Agency duties.

9. To the General Services Administration (GSA) and the National Archives and Records Administration (NARA) under 44 U.S.C. 2904 and 2906, as amended by the NARA Act of 1984, non-tax return information which is not restricted from disclosure by Federal law for use by those agencies in conducting records management studies.

The Administrator of GSA and the Archivist of NARA are charged by 44 U.S.C. 2904, as amended, with promulgating standards, procedures and guidelines regarding record

management and conducting records management studies. 44 U.S.C. 2906, as amended, provides that GSA and NARA are to have access to Federal agencies' records and that agencies are to cooperate with GSA and NARA. In carrying out these responsibilities, it may be necessary for GSA and NARA to have access to this system of records. In such instances, the routine use will facilitate disclosure.

10. To Federal, State, and local law enforcement agencies and private security contractors, as appropriate, information necessary:

- To enable them to protect the safety of SSA employees and the security of the SSA workplace, and the operation of SSA facilities, or
- To assist investigations or prosecutions with respect to activities that affect such safety and security or activities that disrupt the operation of SSA facilities.

We will disclose information under this routine use to law enforcement agencies and private security contractors when information is needed to investigate, prevent, or respond to activities that jeopardize the security and safety of SSA employees or workplaces, or that otherwise disrupt the operation of SSA facilities. Information would also be disclosed to assist in the prosecution of persons charged with violating Federal or local law in connection with such activities.

11. To appropriate Federal, State, and local agencies, entities, and persons when (1) we suspect or confirm that the security or confidentiality of information in this system of records has been compromised; (2) we determine that as a result of the suspected or confirmed compromise there is a risk of harm to economic or property interests, identity theft or fraud, or harm to the security or integrity of this system or other systems or programs of SSA that rely upon the compromised information; and (3) we determine that disclosing the information to such agencies, entities, and persons is necessary to assist in our efforts to respond to the suspected or confirmed compromise and prevent, minimize, or remedy such harm. SSA will use this routine use to respond only to those incidents involving an unintentional release of its records.

This routine use specifically permits the disclosure of SSA information in connection with response and remediation efforts in the event of an unintentional release of Agency information, otherwise known as a ''data security breach.'' This routine use serves to protect the interests of the people whose information is at risk by allowing us to take appropriate steps to facilitate a timely and effective response to a data security breach. It will also help us to improve our ability to prevent, minimize, or remedy any harm that may result from a compromise of data maintained in these systems of records.

B. Compatibility of Proposed Routine Uses

The Privacy Act (5 U.S.C. 552a(b)(3)) and our disclosure regulations (20 CFR part 401) permit us to disclose information under a published routine use for a purpose that is compatible with the purpose for which we collected the information. Section 401.150(c) of SSA Regulations permits us to disclose information under a routine use where necessary to carry out SSA programs. SSA Regulations at section 401.120 provide that we will disclose information when a law specifically requires the disclosure. The proposed routine uses numbered 1 through 9, 11 and 12 above will ensure efficient administration of the *IPP System;* the disclosure that would be made under routine use number 10 is required by Federal law. Thus, all routine uses are appropriate and meet the relevant statutory and regulatory criteria.

III. Records Storage Medium and Safeguards for the Proposed New System Entitled the IPP System

SSA will maintain information in the *IPP System* in electronic and paper form. Only authorized SSA and contractor personnel who have a need for the information in the performance of their official duties will be permitted access to the information. We will safeguard the security of the information by requiring the use of access codes to enter the computer system that will maintain the data and will store computerized records in secured areas that are accessible only to employees who require the information to perform their official duties. Any paper maintained records will be kept in locked cabinets or in otherwise secure areas. Furthermore, SSA employees having access to SSA databases maintaining personal information must sign a sanction document annually, acknowledging their accountability for making unauthorized access to or disclosure of such information.

Contractor personnel having access to data in the proposed system of records will be required to adhere to SSA rules concerning safeguards, access and use of the data.

SSA and contractor personnel having access to the data in this system will be informed of the criminal penalties of the Privacy Act for unauthorized access to or disclosure of information maintained in this system. *See* 5 U.S.C. 552a(i)(1).

IV. Effect of the Proposed New System of Records entitled the IPP System

The proposed new system of records will maintain only that information which is necessary to safeguard the anonymity of employees requesting participation in the IPP so that these individuals can perform the functions of their employment positions without fear for their physical safety or other harm. Security measures will be employed that protect access to and preclude unauthorized disclosure of records in this system of records. Additionally, SSA will adhere to all applicable provisions of the Privacy Act, Social Security Act and other Federal statutes that govern our use and disclosure of the information. Thus, we do not anticipate that the proposed system of records will have an unwarranted effect on the privacy of the individuals that will be covered by the *IPP System.*

Dated: March 17, 2008.

Michael J. Astrue,

Commissioner.

SYSTEM NUMBER: 60–0360

SYSTEM NAME:

Identity Protection Program (IPP) System.

SYSTEM CLASSIFICATION:

None.

SYSTEM LOCATION:

Social Security Administration, Office of Human Resources, 6401 Security Boulevard, Baltimore, Maryland 21235.

CATEGORIES OF INDIVIDUALS COVERED BY THE SYSTEM:

SSA Employees who have requested participation in the IPP.

CATEGORIES OF RECORDS IN THE SYSTEM:

This system consists of a variety of records concerning participation in the IPP. In addition to the employee's name, this system includes information such as the employee's personal identification number (PIN), locator information, telephone number, component, documentation submitted to support the reason for the request for program participation, as well as any subsequent documentation provided by the employee; employee's written request to be removed from the IPP; the number of IPP requests that have been granted or denied by employee; the number of IPP requests that have been granted or denied by Agency component; reason for program participation request denial; and length

of time taken to process each request for program participation.

AUTHORITY FOR MAINTENANCE OF THE SYSTEM:

Sections 205 and 702(a)(5) of the Social Security Act (42 U.S.C. 405, 902(a)(5)).

PURPOSE(S):

Information in the *IPP System* is used to:

- Provide a means of collecting information about SSA employees who reasonably believe that they may be at risk of injury or other harm by the disclosure of their work location and telephone number.
- Provide a standard approach to ensuring the safety of SSA employees who reasonably believe that they may be at risk of injury or other harm by the disclosure of their work location and telephone number.

The information in this system will be used to establish participation in the *IPP.* We will establish program participation when an employee has made known his/her request for program participation and all of the required documentation has been submitted.

ROUTINE USES OF RECORDS MAINTAINED IN THE SYSTEM, INCLUDING CATEGORIES OF USERS AND THE PURPOSE OF SUCH USES:

Disclosures may be made for routine uses as indicated below.

(1) To the Office of the President for the purpose of responding to an individual pursuant to an inquiry received from that individual or from a third party on his or her behalf.

(2) To a congressional office in response to an inquiry from that office made at the request of the subject of a record.

(3) To the Department of Justice (DOJ), a court or other tribunal, or another party before such tribunal when:

(a) SSA, or any component thereof; or

(b) Any SSA employee in his/her official capacity; or

(c) Any SSA employee in his/her individual capacity where DOJ (or SSA where it is authorized to do so) has agreed to represent the employee; or

(d) The United States or any agency thereof where SSA determines that the litigation is likely to affect the operations of SSA or any of its components, is a party to the litigation or has an interest in such litigation, and SSA determines that the use of such records by DOJ, a court or other tribunal, or another party before such tribunal is relevant and necessary to the litigation, provided, however, that in each case, SSA determines that such disclosure is compatible with the purpose for which the records were collected.

(4) To the Equal Employment Opportunity Commission (EEOC or Commission) when requested in connection with investigations into alleged or possible discriminatory practices in the Federal sector, examination of Federal affirmative employment programs, compliance by Federal agencies with the Uniform Guidelines on Employee Selection Procedures, or other functions vested in the Commission.

(5) To the Federal Labor Relations Authority, the General Counsel, the Federal Mediation and Conciliation Service, the Federal Service Impasses Panel, or an arbitrator when information is requested in connection with the investigations of allegations of unfair labor practices, matters before an arbitrator or the Federal Impasses Panel.

(6) To the Office of Personnel Management, Merit Systems Protection Board, or the Office of the Special Counsel, in connection with appeals, special studies of the civil service and other merit systems, review of those agencies' rules and regulations, investigation of alleged or possible prohibited personnel practices, and other such functions promulgated in 5 U.S.C. Chapter 12, or as may be authorized by law.

(7) To contractors and other Federal agencies, as necessary, for the purpose of assisting SSA in the efficient administration of its programs. We contemplate disclosing information under this routine use only in situations in which SSA may enter into a contractual or similar agreement with a third party to assist in accomplishing an Agency function relating to this system of records.

(8) To student volunteers, individuals who work under a personal services contract, and other individuals performing functions for SSA, who technically do not have the status of Agency employees, when they are performing work for SSA, as authorized by law, and they need access to the records in order to perform their assigned Agency functions.

(9) To the General Services Administration (GSA) and National Archives and Records Administration (NARA) under 44 U.S.C. § 2904 and § 2906, as amended by the NARA Act of 1984, non-tax return information which is not restricted from disclosure by Federal law for use by those agencies in conducting records management studies.

(10) To Federal, State, and local law enforcement agencies and private security contractors, as appropriate, information necessary:

- To enable them to protect the safety of SSA employees and customers, the security of the SSA workplace, the operation of SSA facilities, or
- To assist investigations or prosecutions with respect to activities that affect such safety and security or activities that disrupts the operation of SSA facilities.

(11) To appropriate Federal, State, and local agencies, entities, and persons when (1) we suspect or confirm that the security or confidentiality of information in this system of records has been compromised; (2) we determine that as a result of the suspected or confirmed compromise there is a risk of harm to economic or property interests, identity theft or fraud, or harm to the security or integrity of this system or other systems or programs of SSA that rely upon the compromised information; and (3) we determine that disclosing the information to such agencies, entities, and persons is necessary to assist in our efforts to respond to the suspected or confirmed compromise and prevent, minimize, or remedy such harm. SSA will use this routine use to respond only to those incidents involving an unintentional release of its records.

POLICIES AND PRACTICES FOR STORING, RETRIEVING, ACCESSING, RETAINING AND DISPOSING OF RECORDS IN THE SYSTEM:

STORAGE:

Records in this system are maintained and stored in both electronic and paper form.

RETRIEVABILITY:

Records in this system will be retrieved by the employee's PIN and/or name.

SAFEGUARDS:

Security measures include the use of access codes to enter the computer system which will maintain the data, the storage of computerized records in secured areas that are accessible only to employees who require the information in performing their official duties. Manually maintained records will be kept in locked cabinets or in otherwise secure areas. SSA employees who have access to the data will be informed of the criminal penalties of the Privacy Act for unauthorized access to or disclosure of information maintained in the system. *See* 5 U.S.C. 552a(i)(1).

Contractor personnel and/or alternate employees having access to data in the system of records will be required to adhere to SSA rules concerning safeguards, access and use of the data.

RETENTION AND DISPOSAL:

The records are maintained in SSA headquarters Office of Human Resources or regional Servicing Personnel Offices. They are disposed of in accordance with item 17a of the National Archives and Records Administration General Records Schedule 1.

SYSTEM MANAGER(S):

Associate Commissioner, Office of Personnel, Social Security Administration, 6401 Security Boulevard, Baltimore, Maryland 21235–6401.

NOTIFICATION PROCEDURE(S):

An individual can determine if this system contains a record about him/her by writing to the system manager at the above address and providing his/her name, SSN or other information that may be in the system of records that will identify him/her. An individual requesting notification of records in person should provide the same information, as well as provide an identity document, preferably with a photograph, such as a driver's license. If an individual does not have any identification documents sufficient to establish his/her identity, the individual must certify in writing that he/she is the person claimed to be and that he/she understands that knowing and willful request for, or acquisition of, a record pertaining to another individual under false pretenses is a criminal offense.

If notification is requested by telephone, an individual must verify his/her identity by providing identifying information that parallels the record to which notification is being requested. Individuals providing insufficient identifying information by telephone will be required to submit a request in writing or in person. If an individual is requesting information by telephone on behalf of another individual, the subject individual must be connected with SSA and the requesting individual in the same phone call. SSA will establish the subject individual's identity (his/her name, PIN, address, date of birth and place of birth along with one other piece of information such as mother's maiden name) and ask for his/her consent in providing information to the requesting individual.

If a request for notification is submitted by mail, an individual must include a notarized statement to SSA to verify his/her identity or must certify in the request that he/she is the person claimed to be and that he/she understands that knowing and willful request for, or acquisition of, a record pertaining to another individual under false pretenses is a criminal offense. These procedures are in accordance with SSA Regulations (20 CFR 401.45).

RECORD ACCESS PROCEDURE(S):

Same as Notification procedure(s). Requesters also should reasonably specify the record contents they are seeking. These procedures are in accordance with SSA Regulations (20 CFR 401.40).

CONTESTING RECORD PROCEDURE(S):

Same as Notification procedure(s). Requesters should also reasonably identify the record, specify the information they are contesting, and state the corrective action sought and the reasons for the correction, with supporting justification, showing how the record is untimely, incomplete, inaccurate, or irrelevant. These procedures are in accordance with SSA Regulations (20 CFR 401.65).

RECORD SOURCE CATEGORIES:

Information in this system is obtained from information collected from SSA employees and officials.

SYSTEMS EXEMPT FROM CERTAIN PROVISIONS OF THE PRIVACY ACT:

None.

[FR Doc. E8–6066 Filed 3–24–08; 8:45 am]

BILLING CODE 4191–02–P

DEPARTMENT OF STATE

[Public Notice: 6149]

30-Day Notice of Proposed Information Collection: DS–10, Birth Affidavit, OMB No. 1405–0132

ACTION: Notice of request for public comment and submission to OMB of proposed collection of information.

SUMMARY: The Department of State has submitted the following information collection request to the Office of Management and Budget (OMB) for approval in accordance with the Paperwork Reduction Act of 1995.

- *Title of Information Collection:* Birth Affidavit.
- *OMB Control Number:* 1405–0132.
- *Type of Request:* Revision of a currently approved collection.
- *Originating Office:* Bureau of Consular Affairs, CA/PPT/FO/FC.
- *Form Number:* DS–10.
- *Respondents:* Individuals or Households.
- *Estimated Number of Respondents:* 154,850.
- *Estimated Number of Responses:* 154,850.
- *Average Hours Per Response:* 15 minutes.
- *Total Estimated Burden:* 38,713 hours.
- *Frequency:* On occasion.
- *Obligation to Respond:* Required to obtain or retain a benefit.

DATES: Submit comments to the Office of Management and Budget (OMB) for up to 30 days from March 25, 2008.

ADDRESSES: Direct comments and questions to Katherine Astrich, the Department of State Desk Officer in the Office of Information and Regulatory Affairs at the Office of Management and Budget (OMB), who may be reached at 202–395–4718. You may submit comments by any of the following methods:

- *E-mail: kastrich@omb.eop.gov.* You must include the DS form number, information collection title, and OMB control number in the subject line of your message.
- *Mail (paper, disk, or CD–ROM submissions):* Office of Information and Regulatory Affairs, Office of Management and Budget, 725 17th Street, NW., Washington, DC 20503.
- *Fax:* 202–395–6974.

FOR FURTHER INFORMATION CONTACT: You may obtain copies of the proposed information collection and supporting documents from Steven J. Jelinski, who may be reached at 202–663–2468 or at *jelinskis@state.gov*.

SUPPLEMENTARY INFORMATION: We are soliciting public comments to enable the Department to do the following:

- Assess whether the proposed information collection is necessary to properly perform our functions.
- Evaluate the accuracy of our estimate of the burden of the proposed collection, including the validity of the methodology and assumptions used.
- Enhance the quality, utility, and clarity of the information to be collected.
- Minimize the reporting burden on those who are to respond.

Abstract of Proposed Collection

The Birth Affidavit is submitted in conjunction with an application for a U.S. passport and used by Passport Services to collect information for the purpose of establishing the citizenship of a passport applicant who has not submitted an acceptable United States birth certificate with his/her passport application.

Methodology

When needed, a Birth Affidavit is completed at the time a U.S. citizen applies for a U.S. passport.

Dated: March 5, 2008.

Ann Barrett,

Deputy Assistant Secretary, Bureau of Consular Affairs, Department of State.

[FR Doc. E8–6014 Filed 3–24–08; 8:45 am]

BILLING CODE 4710–06–P

DEPARTMENT OF STATE

[Public Notice: 6150]

30-Day Notice of Proposed Information Collection: DS–60, Affidavit Regarding a Change of Name, OMB Control Number 1405–0133

ACTION: Notice of request for public comment and submission to OMB of proposed collection of information.

SUMMARY: The Department of State has submitted the following information collection request to the Office of Management and Budget (OMB) for approval in accordance with the Paperwork Reduction Act of 1995.

- *Title of Information Collection:* Affidavit Regarding a Change of Name.
- *OMB Control Number:* 1405–0133.
- *Type of Request:* Revision of a Currently Approved Collection.
- *Originating Office:* Bureau of Consular Affairs, CA/PT/FO/FC.
- *Form Number:* DS–60.
- *Respondents:* Individuals and Households.
- *Estimated Number of Respondents:* 202,920.
- *Estimated Number of Responses:* 202,920.
- *Average Hours Per Response:* 15 minutes.
- *Total Estimated Burden:* 50,730 hours.
- *Frequency:* On occasion.
- *Obligation to Respond:* Required to obtain or retain a benefit.

DATES: Submit comments to the Office of Management and Budget (OMB) for up to 30 days from March 25, 2008.

ADDRESSES: Direct comments and questions to Katherine Astrich, the Department of State Desk Officer in the Office of Information and Regulatory Affairs at the Office of Management and Budget (OMB), who may be reached at 202–395–4718. You may submit comments by any of the following methods:

- *E-mail: kastrich@omb.eop.gov.* You must include the DS form number, information collection title, and OMB control number in the subject line of your message.
- *Mail (paper, disk, or CD–ROM submissions):* Office of Information and Regulatory Affairs, Office of Management and Budget, 725 17th Street, NW., Washington, DC 20503.
- *Fax:* 202–395–6974

FOR FURTHER INFORMATION CONTACT: You may obtain copies of the proposed information collection and supporting documents from Steven J. Jelinski, 2100 Pennsylvania Avenue, NW., Washington DC 20037, who may be reached at (202) 663–2468, or at *jelinskis@state.gov*.

SUPPLEMENTARY INFORMATION: We are soliciting public comments to enable the Department to do the following:

- Assess whether the proposed information collection is necessary to properly perform our functions.
- Evaluate the accuracy of our estimate of the burden of the proposed collection, including the validity of the methodology and assumptions used.
- Enhance the quality, utility, and clarity of the information to be collected.
- Minimize the reporting burden on those who are to respond,

Abstract of Proposed Collection

The Affidavit Regarding a Change of Name is submitted in conjunction with an application for a U.S. passport. It is used by Passport Services to collect information for the purpose of establishing that a passport applicant, who has adopted a new name without formal court proceedings, or by marriage, has publicly and exclusively used the adopted name over a long period of time (in general five years).

Methodology

When needed, the Affidavit Regarding a Change of Name is completed at the time a U.S. citizen applies for a U.S. passport.

Dated: March 5, 2008.

Ann Barrett,

Deputy Assistant Secretary for Passport Services, Bureau of Consular Affairs, Department of State.

[FR Doc. E8–6015 Filed 3–24–08; 8:45 am]

BILLING CODE 4710–06–P

DEPARTMENT OF STATE

[Public Notice 6146]

Culturally Significant Objects Imported for Exhibition Determinations: ''Classically Greek: Coins and Bank Notes From Antiquity to Today''

SUMMARY: Notice is hereby given of the following determinations: Pursuant to the authority vested in me by the Act of October 19, 1965 (79 Stat. 985; 22 U.S.C. 2459), Executive Order 12047 of March 27, 1978, the Foreign Affairs Reform and Restructuring Act of 1998 (112 Stat. 2681, *et seq.*; 22 U.S.C. 6501 note, *et seq.*), Delegation of Authority No. 234 of October 1, 1999, Delegation of Authority No. 236 of October 19, 1999, as amended, and Delegation of Authority No. 257 of April 15, 2003 [68 FR 19875], I hereby determine that the objects to be included in the exhibition ''Classically Greek: Coins and Bank Notes from Antiquity to Today,'' imported from abroad for temporary exhibition within the United States, are of cultural significance. The objects are imported pursuant to loan agreements with the foreign owners or custodians. I also determine that the exhibition or display of the exhibit objects at the Smithsonian Institution, Washington, DC, from on or about April 10, 2008, until on or about June 10, 2008, and at possible additional exhibitions or venues yet to be determined, is in the national interest. Public Notice of these Determinations is ordered to be published in the **Federal Register**.

FOR FURTHER INFORMATION CONTACT: For further information, including a list of the exhibit objects, contact Carol B. Epstein, Attorney-Adviser, Office of the Legal Adviser, U.S. Department of State (telephone: 202–453–8048). The address is U.S. Department of State, SA–44, 301 4th Street, SW., Room 700, Washington, DC 20547–0001.

Dated: March 18, 2008.

C. Miller Crouch,

Principal Deputy Assistant Secretary for Educational and Cultural Affairs, Department of State.

[FR Doc. E8–6017 Filed 3–24–08; 8:45 am]

BILLING CODE 4710–05–P

DEPARTMENT OF TRANSPORTATION

Federal Railroad Administration

Petition for Waiver of Compliance

In accordance with Part 211 of Title 49 Code of Federal Regulations (CFR), notice is hereby given that the Federal Railroad Administration (FRA) received a request for a waiver of compliance with certain requirements of its safety standards. The individual petition is described below; including the party seeking relief, the regulatory provisions involved, the nature of the relief being requested, and the petitioner's arguments in favor of relief.

Riverport Railroad, LLC

(Waiver Petition Docket Number FRA–2008–0028)

The Riverport Railroad, LLC (RVPR), a Class III railroad, seeks a waiver of compliance from the requirements of Part 223—Safety Glazing Standards 49 CFR 223.11 Requirements for existing

locomotives. Specifically, RVPR has petitioned FRA for a waiver for three (3) 60-ton 500 horsepower diesel electric locomotives numbered 4029, 1251, and 1273. These locomotives were built for the Department of Defense (DoD) by Baldwin-Lima-Hamilton in 1953–54, and remanufactured by DoD circa 1987–90. RVPR operates these locomotives on a terminal/switching railroad at the former Savanna [IL] Army Ordnance Depot, presently controlled by the Jo Daviess/Carroll County Local Redevelopment Authority. RVPR operates at speeds of 10 miles per hour (or less) storing cars for customers, and servicing a railcar repair facility.

RVPR states that all adjoining land to the railroad is controlled by itself, or privately owned and access controlled. All trackage is enclosed, and there are no overhead structures or bridges from where objects could be thrown. Interchange to the general system is accomplished with BNSF Railway on five interchange tracks at Robinson Spur, Illinois.

Interested parties are invited to participate in these proceedings by submitting written views, data, or comments. FRA does not anticipate scheduling a public hearing in connection with these proceedings since the facts do not appear to warrant a hearing. If any interested party desires an opportunity for oral comment, they should notify FRA, in writing, before the end of the comment period and specify the basis for their request.

All communications concerning these proceedings should identify the appropriate docket number (e.g., Waiver Petition Docket Number FRA–2008–0028) and may be submitted by any of the following methods:

- *Web site: http://www.regulations.gov.* Follow the online instructions for submitting comments.
- *Fax:* 202–493–2251.
- *Mail:* Docket Operations Facility, U.S. Department of Transportation, 1200 New Jersey Avenue, SE., W12–140, Washington, DC 20590.
- *Hand Delivery:* 1200 New Jersey Avenue, SE., Room W12–140, Washington, DC 20590, between 9 a.m. and 5 p.m., Monday through Friday, except Federal holidays.

Communications received within 45 days of the date of this notice will be considered by FRA before final action is taken. Comments received after that date will be considered as far as practicable. All written communications concerning these proceedings are available for examination during regular business hours (9 a.m.–5 p.m.) at the above facility. All documents in the public docket are also available for inspection and copying on the Internet at the docket facility's Web site at *http://www.regulations.gov*.

Anyone is able to search the electronic form of any written communications and comments received into any of our dockets by the name of the individual submitting the comment (or signing the comment, if submitted on behalf of an association, business, labor union, etc.). You may review DOT's complete Privacy Act Statement in the **Federal Register** published on April 11, 2000 (Volume 65, Number 70; Pages 19477–78).

Issued in Washington, DC, on March 19, 2008.

Grady C. Cothen, Jr.,

Deputy Associate Administrator for Safety Standards and Program Development.

[FR Doc. E8–6006 Filed 3–24–08; 8:45 am]

BILLING CODE 4910–06–P

DEPARTMENT OF TRANSPORTATION

National Highway Traffic Safety Administration

[Docket No. NHTSA–2008–0052]

Decision that Certain Nonconforming Motor Vehicles are Eligible for Importation

AGENCY: National Highway Traffic Safety Administration (NHTSA), Department of Transportation.

ACTION: Notice of decision by NHTSA that certain nonconforming motor vehicles are eligible for importation.

SUMMARY: This document announces decisions by NHTSA that certain motor vehicles not originally manufactured to comply with all applicable Federal motor vehicle safety standards (FMVSS) are eligible for importation into the United States because they are substantially similar to vehicles originally manufactured for importation into and/or sale in the United States and certified by their manufacturers as complying with the safety standards, and they are capable of being readily altered to conform to the standards or because they have safety features that comply with, or are capable of being altered to comply with, all applicable FMVSS.

DATES: These decisions became effective on the dates specified in Annex A.

FOR FURTHER INFORMATION CONTACT: Coleman Sachs, Office of Vehicle Safety Compliance, NHTSA (202–366–3151).

SUPPLEMENTARY INFORMATION:

Background

Under 49 U.S.C. 30141(a)(1)(A), a motor vehicle that was not originally manufactured to conform to all applicable FMVSS shall be refused admission into the United States unless NHTSA has decided that the motor vehicle is substantially similar to a motor vehicle originally manufactured for importation into and/or sale in the United States, certified under 49 U.S.C. 30115, and of the same model year as the model of the motor vehicle to be compared, and is capable of being readily altered to conform to all applicable FMVSS.

Where there is no substantially similar U.S.-certified motor vehicle, 49 U.S.C. 30141(a)(1)(B) permits a nonconforming motor vehicle to be admitted into the United States if its safety features comply with, or are capable of being altered to comply with, all applicable FMVSS based on destructive test data or such other evidence as NHTSA decides to be adequate.

Petitions for eligibility decisions may be submitted by either manufacturers or importers who have registered with NHTSA pursuant to 49 CFR Part 592. As specified in 49 CFR 593.7, NHTSA publishes notice in the **Federal Register** of each petition that it receives, and affords interested persons an opportunity to comment on the petition. At the close of the comment period, NHTSA decides, on the basis of the petition and any comments that it has received, whether the vehicle is eligible for importation. The agency then publishes this decision in the **Federal Register**.

NHTSA received petitions from registered importers to decide whether the vehicles listed in Annex A to this notice are eligible for importation into the United States. To afford an opportunity for public comment, NHTSA published notice of these petitions as specified in Annex A. The reader is referred to those notices for a thorough description of the petitions. No substantive comments were received in response to these notices. Based on its review of the information submitted by the petitioners, NHTSA has decided to grant the petitions.

Vehicle Eligibility Number for Subject Vehicles

The importer of a vehicle admissible under any final decision must indicate on the form HS–7 accompanying entry the appropriate vehicle eligibility number indicating that the vehicle is eligible for entry. Vehicle eligibility numbers assigned to vehicles admissible

under this decision are specified in Annex A.

Final Decision

Accordingly, on the basis of the foregoing, NHTSA hereby decides that each motor vehicle listed in Annex A to this notice, which was not originally manufactured to comply with all applicable FMVSS, is either (1) substantially similar to a motor vehicle manufactured for importation into and/or sale in the United States, and certified under 49 U.S.C. 30115, as specified in Annex A, and is capable of being readily altered to conform to all applicable FMVSS or (2) has safety features that comply with, or are capable of being altered to comply with, all applicable Federal motor vehicle safety standards.

Authority: 49 U.S.C. 30141(a)(1)(A), (a)(1)(B) and (b)(1); 49 CFR 593.8; delegations of authority at 49 CFR 1.50 and 501.8.

Issued on: March 19, 2008.

Claude H. Harris,

Director, Office of Vehicle Safety Compliance.

Annex A

Nonconforming Motor Vehicles Decided to be Eligible for Importation

1. Docket No. NHTSA–2007–28262

Nonconforming Vehicles: 2005 Honda CR–V Multipurpose Passenger Vehicle.

Substantially Similar U.S. Certified Vehicles: 2005 Honda CR–V Multipurpose Passenger Vehicle.

Notice of Petition Published at: 72 FR 30428 (May 31, 2007).

Vehicle Eligibility Number: VSP–489 (effective date July 11, 2007).

2. Docket No. NHTSA–2007–28261

Nonconforming Vehicles: 1986–1987 Volkswagen Transporter Multipurpose Passenger Vehicle.

Substantially Similar U.S. Certified Vehicles: 1986–1987 Volkswagen Vanagon Multipurpose Passenger Vehicle.

Notice of Petition Published at: 72 FR 30424 (May 31, 2007).

Vehicle Eligibility Number: VSP–490 (effective date July 11, 2007).

3. Docket No. NHTSA–2007–28263

Nonconforming Vehicles: 2006 Harley Davidson FX, FL, & XL Motorcycle

Substantially Similar U.S. Certified Vehicles: 2006 Harley Davidson FX, FL, & XL Motorcycle.

Notice of Petition Published at: 72 FR 30425 (May 31, 2007).

Vehicle Eligibility Number: VSP–491 (effective date July 11, 2007).

4. Docket No. NHTSA–2007–28264

Nonconforming Vehicles: 2003 Kawasaki VN1500–P1/P2 Motorcycle.

Substantially Similar U.S. Certified Vehicles: 2003 Kawasaki VN1500–P1/P2 Motorcycle.

Notice of Petition Published at: 72 FR 30429 (May 31, 2007).

Vehicle Eligibility Number: VSP–492 (effective date July 11, 2007).

5. Docket No. NHTSA–2007–28531

Nonconforming Vehicles: 2004 Hyundai XG350 Passenger Car.

Substantially Similar U.S. Certified Vehicles: 2004 Hyundai XG350 Passenger Car.

Notice of Petition Published at: 72 FR 35541 (June 28, 2007).

Vehicle Eligibility Number: VSP–494 (effective date August 14, 2007).

6. Docket No. NHTSA–2007–0006

Nonconforming Vehicles: 2000–2001 Moto Guzzi California Motorcycles.

Substantially Similar U.S. Certified Vehicles: 2000–2001 Moto Guzzi California Motorcycles.

Notice of Petition Published at: 72 FR 59591 (October 22, 2007).

Vehicle Eligibility Number: VSP–495 (effective date November 28, 2007).

7. Docket No. NHTSA–2007–0005

Nonconforming Vehicles: 2004–2005 Vespa LX and PX Model Motorcycles.

Substantially Similar U.S. Certified Vehicles: 2004–2005 Vespa LX and PX Model Motorcycles.

Notice of Petition Published at: 72 FR 59588 (October 22, 2007).

Vehicle Eligibility Number: VSP–496 (effective date November 28, 2007).

8. Docket No. NHTSA–2007–0004

Nonconforming Vehicles: 1999–2007 Yamaha Drag Star 1100 Motorcycles.

Substantially Similar U.S. Certified Vehicles: 1999–2007 Yamaha V Star 1100 Motorcycles.

Notice of Petition Published at: 72 FR 59586 (October 22, 2007).

Vehicle Eligibility Number: VSP–497 (effective date November 28, 2007).

9. Docket No. NHTSA–2007–0007

Nonconforming Vehicles: 1988 Ducati 851 Motorcycles.

Substantially Similar U.S. Certified Vehicles: 1988 Ducati 851 Motorcycles.

Notice of Petition Published at: 72 FR 59584 (October 22, 2007).

Vehicle Eligibility Number: VSP–498 (effective date November 28, 2007).

10. Docket No. NHTSA–2007–0009

Nonconforming Vehicles: 2007 Harley Davidson FXSTC Soft Tail Custom Motorcycles.

Substantially Similar U.S. Certified Vehicles: 2007 Harley Davidson FXSTC Soft Tail Custom Motorcycles.

Notice of Petition Published at: 72 FR 59590 (October 22, 2007).

Vehicle Eligibility Number: VSP–499 (effective date November 28, 2007).

11. Docket No. NHTSA–2007–0008

Nonconforming Vehicles: 1993 Ducati 888 Motorcycles.

Substantially Similar U.S. Certified Vehicles: 1993 Ducati 888 Motorcycles.

Notice of Petition Published at: 72 FR 59589 (October 22, 2007).

Vehicle Eligibility Number: VSP–500 (effective date November 28, 2007).

12. Docket No. NHTSA–2007–0036

Nonconforming Vehicles: 1992 Alfa Romeo Spyder Passenger Cars.

Substantially Similar U.S. Certified Vehicles: 1992 Alfa Romeo Spyder Passenger Cars.

Notice of Petition Published at: 72 FR 65833 (November 23, 2007).

Vehicle Eligibility Number: VSP–503 (effective date January 16, 2008).

13. Docket No. NHTSA–2007–0021

Nonconforming Vehicles: 2000–2003 BMW C1 Motorcycles. Because there are no substantially similar U.S.-certified version 2000–2003 BMW C1 Motorcycles, the petitioner sought import eligibility under 49 U.S.C. 30141(a)(1)(B).

Notice of Petition Published at: 72 FR 63652 (November 9, 2007).

Vehicle Eligibility Number: VCP–40 (effective date January 16, 2008).

[FR Doc. E8–6074 Filed 3–24–08; 8:45 am]

BILLING CODE 4910–59–P

DEPARTMENT OF TRANSPORTATION

National Highway Traffic Safety Administration

[Docket No. NHTSA–2008–0048; Notice 1]

Hyundai Motor Company, Receipt of Petition for Decision of Inconsequential Noncompliance

Hyundai Motor Company (Hyundai), has determined that certain vehicles that it manufactured during the period beginning July 14, 2006 through November 23, 2007, did not fully comply with paragraph S9.5 of 49 CFR 571.225 (Federal Motor Vehicle Safety Standards (FMVSS) No. 225 *Child Restraint Anchorage Systems.* Hyundai has filed an appropriate report pursuant to 49 CFR Part 573, *Defect and Noncompliance Responsibility and Reports.*

Pursuant to 49 U.S.C. 30118(d) and 30120(h) (see implementing rule at 49

CFR part 556), Hyundai has petitioned for an exemption from the notification and remedy requirements of 49 U.S.C. Chapter 301 on the basis that this noncompliance is inconsequential to motor vehicle safety.

This notice of receipt of Hyundai's petition is published under 49 U.S.C. 30118 and 30120 and does not represent any agency decision or other exercise of judgment concerning the merits of the petition.

Affected are approximately 115,000 model years 2007 and 2008 Hyundai Elantra passenger cars produced beginning July 14, 2006 through November 23, 2007. Paragraph S9.5 of 49 CFR 571.225 requires in pertinent part that:

S9.5 Marking and conspicuity of the lower anchorages. Each vehicle shall comply with S9.5(a) or (b).

(a) Above each bar installed pursuant to S4, the vehicle shall be permanently marked with a circle:

(1) That is not less than 13 mm in diameter;

(2) That is either solid or open, with or without words, symbols or pictograms, provided that if words, symbols or pictograms are used, their meaning is explained to the consumer in writing, such as in the vehicle's owners manual; and

(3) That is located such that its center is on each seat back between 50 and 100 mm above or on the seat cushion 100(±)25 mm forward of the intersection of the vertical transverse and horizontal longitudinal planes intersecting at the horizontal centerline of each lower anchorage, as illustrated in Figure 22. The center of the circle must be in the vertical longitudinal plane that passes through the center of the bar (±25 mm).

(4) The circle may be on a tag.

(b) The vehicle shall be configured such that the following is visible: Each of the bars installed pursuant to S4, or a permanently attached guide device for each bar. The bar or guide device must be visible without the compression of the seat cushion or seat back, when the bar or device is viewed, in a vertical longitudinal plane passing through the center of the bar or guide device, along a line making an upward 30 degree angle with a horizontal plane. Seat backs are in the nominal design riding position. The bars may be covered by a removable cap or cover, provided that the cap or cover is permanently marked with words, symbols or pictograms whose meaning is explained to the consumer in written form as part of the owner's manual.

Hyundai explained its belief that paragraph S9.5 of FMVSS No. 225 requires that above each child restraint lower anchorage the vehicle shall be permanently marked with; a circle that is not less than 13 mm in diameter, that is either solid or open, with or without words, symbols or pictograms, provided that if words, symbols or pictograms are used, their meaning is explained to the consumer in writing, such as in the vehicle's owner's manual.

Hyundai also explained that the owner's manuals of the affected vehicles contain a section titled ''Child seat lower anchorages'' that provides illustrations indicating the locations of the child restraint lower anchorages and written descriptions of the locations of the child restraint lower anchorages. Hyundai expressed its belief that the vehicles are properly marked, as required by paragraph S9.5 of FMVSS No. 225, with solid circles to identify the locations of the lower anchorages. Hyundai also stated that those solid circles contain pictograms, which represent a child seated in a child restraint. However, the owner's manuals provided with the affected vehicles do not contain a specific written explanation of the meaning of the pictogram that appears on the identification circles.

Hyundai states that it believes the noncompliance is inconsequential to motor vehicle safety for the following reasons:

(1) When the requirements of paragraph S9.5 were first implemented over seven years ago, there may have been the potential to misunderstand the newly adopted child restraint lower anchorage identification mark. Therefore, NHTSA decided that a circle must be used, to standardize the symbol used to identify the anchorages, because standardization would likely increase user recognition of the symbol. The standardized circle has now appeared in almost every U.S. vehicle for more than seven years, allowing the public to gain familiarity with its purpose. In reference to the identification circles, FMVSS 225 No. S9.5 (a)(2) states that they may be ''with or without words, symbols or pictograms''. If the identification circle does not contain any pictogram, it does not require a written explanation.

(2) The simple pictogram representing a child seated in a child restraint enhances the identification provided by the circle. The missing written explanation of the meaning of the pictogram does not affect the ability of a person to locate the lower anchorages, aided by the visual indication of the identification circles and the illustrations and written explanations provided in the owner's manual, and does not affect the ability of the lower anchorages to properly secure a child restraint.

In addition, Hyundai stated that even though it will include a written explanation in future printings of the subject owner's manual, it strongly believes that the missing written explanation is an inconsequential noncompliance that poses no threat to the safety of its customers.

Hyundai also states that no customer complaints have been received related to the lack of a written explanation of the meaning of the pictogram or any problems that may have resulted from the lack of a written explanation of the meaning of the pictogram.

Hyundai requested that NHTSA consider its petition and grant an exemption from the recall requirements of the National Traffic and Motor Vehicle Safety Act on the basis that the noncompliance described above is inconsequential as it relates to motor vehicle safety.

NHTSA notes that the statutory provisions (49 U.S.C. 30118(d) and 30120(h)) that permit manufacturers to file petitions for a determination of inconsequentiality allow NHTSA to exempt manufacturers only from the duties found in sections 30118 and 30120, respectively, to notify owners, purchasers, and dealers of a defect or noncompliance and to remedy the defect or noncompliance.

Interested persons are invited to submit written data, views, and arguments on this petition. Comments must refer to the docket and notice number cited at the beginning of this notice and be submitted by any of the following methods:

a. *By mail addressed to:* U.S. Department of Transportation, Docket Operations, M–30, West Building Ground Floor, Room W12–140, 1200 New Jersey Avenue, SE., Washington, DC 20590.

b. By hand delivery to U.S. Department of Transportation, Docket Operations, M–30, West Building Ground Floor, Room W12–140, 1200 New Jersey Avenue, SE, Washington, DC 20590. The Docket Section is open on weekdays from 10 a.m. to 5 p.m. except Federal Holidays.

c. *Electronically:* by logging onto the Federal Docket Management System (FDMS) Web site at: *http://www.regulations.gov/.* Follow the online instructions for submitting comments. Comments may also be faxed to 1–202–493–2251.

Comments must be written in the English language, and be no greater than 15 pages in length, although there is no limit to the length of necessary attachments to the comments. If comments are submitted in hard copy form, please ensure that two copies are provided. If you wish to receive confirmation that your comments were received, please enclose a stamped, self-addressed postcard with the comments. Note that all comments received will be posted without change to *http://*

www.regulations.gov, including any personal information provided.

Documents submitted to a docket may be viewed by anyone at the address and times given above. The documents may also be viewed on the Internet at *http://www.regulations.gov* by following the online instructions for accessing the dockets. DOT's complete Privacy Act Statement is available for review in the **Federal Register** published on April 11, 2000 (65 FR 19477–78).

The petition, supporting materials, and all comments received before the close of business on the closing date indicated below will be filed and will be considered. All comments and supporting materials received after the closing date will also be filed and will be considered to the extent possible. When the petition is granted or denied, notice of the decision will be published in the **Federal Register** pursuant to the authority indicated below.

Comment closing date: April 24, 2008.

Authority: (49 U.S.C. 30118, 30120: delegations of authority at CFR 1.50 and 501.8)

Issued on: March 19, 2008.

Claude H. Harris,

Director, Office of Vehicle Safety Compliance.

[FR Doc. E8–6005 Filed 3–24–08; 8:45 am]

BILLING CODE 4910–59–P

DEPARTMENT OF THE TREASURY

Executive Office for Asset Forfeiture; Proposed Collection; Comment Request

ACTION: Notice and request for comments.

SUMMARY: The Department of the Treasury, as part of its continuing effort to reduce paperwork and respondent burden, invites the general public and other Federal agencies to take this opportunity to comment on proposed and/or continuing information collections, as required by the Paperwork Reduction Act of 1995, Public Law 104–13 (44 U.S.C. 3506(c)(2)(A)). Currently, the Executive Office for Asset Forfeiture within the Department of the Treasury is soliciting comments concerning the Request for Transfer of Property Seized/Forfeited by a Treasury Agency, TD F 92–22.46.

DATES: Written comments should be received on or before May 28, 2008 to be assured of consideration.

ADDRESSES: Direct all written comments to the Executive Office for Asset Forfeiture, Attn: Jackie A. Jackson, 1341 G Street 9th Floor NW., Washington, DC 20220. Telephone: (202) 622–2755. E-Mail Address: *Jackie.Jackson@DO.Treas.gov.*

FOR FURTHER INFORMATION CONTACT: Requests for additional information or copies of the form(s) and instructions should be directed to the Executive Office for Asset Forfeiture, Attn: Jackie A. Jackson, 1341 G Street 9th Floor NW., Washington, DC 20220. Telephone: (202) 622–2755. E-Mail Address: *Jackie.Jackson@DO.Treas.gov.*

SUPPLEMENTARY INFORMATION:

Title: Request for Transfer of Property Seized/Forfeited by a Treasury Agency, TD F 92–22.46

OMB Number: 1505–0152.

Form Number: TD F 92–22.46.

Abstract: The form was developed to capture the minimum amount of data necessary to process the application for equitable sharing benefits. Only one form is required per seizure. If a law enforcement agency does not make this one time application for benefits under the equitable sharing process, the agency will not benefit from the forfeiture process.

Current Actions: This is a notice for the continued use of the established form. There are several changes to the form or instructions.

Type of Review: Extension (with changes).

Proposed Changes: At the top of the form add a line for Recipient/Requesting Agency Case Number.

In section II—Add a Line to collect the E-mail Address of the Agency Contact Person.

Affected Public: Federal, State and local law enforcement agencies participating in the Treasury asset sharing program.

Estimated Number of Respondents: 5,000.

Estimated Time Per Respondent: 30 Minutes.

Estimated Total Annual Burden Hours: 2,500.

Request for Comments

Comments submitted in response to this notice will be summarized and/or included in the request for OMB approval. All comments will become a matter of public record. Comments are invited on: (a) Whether the collection of information is necessary for the proper performance of the functions of the agency, including whether the information shall have practical utility; (b) the accuracy of the agency's estimate of the burden of the collection of information; (c) ways to enhance the quality, utility, and clarity of the information to be collected; (d) ways to minimize the burden of the collection of information on respondents, including through the use of automated collection techniques or other forms of information technology; and (e) estimates of capital or start-up costs and costs of operation, maintenance, and purchase of services to provide information.

Eric E. Hampl,

Director, Executive Office for Asset Forfeiture.

[FR Doc. E8–5974 Filed 3–24–08; 8:45 am]

BILLING CODE 4810–25–P

DEPARTMENT OF THE TREASURY

Internal Revenue Service

[CO–49–88]

Proposed Collection; Comment Request for Regulation Project

AGENCY: Internal Revenue Service (IRS), Treasury.

ACTION: Notice and request for comments.

SUMMARY: The Department of the Treasury, as part of its continuing effort to reduce paperwork and respondent burden, invites the general public and other Federal agencies to take this opportunity to comment on proposed and/or continuing information collections, as required by the Paperwork Reduction Act of 1995, Public Law 104–13 (44 U.S.C. 3506(c)(2)(A)). Currently, the IRS is soliciting comments concerning an existing final regulation, CO–49–88 (TD 8546), Limitations on Corporate Net Operating Loss (§ 1.382–6).

DATES: Written comments should be received on or before May 27, 2008 to be assured of consideration.

ADDRESSES: Direct all written comments to Glenn P. Kirkland, Internal Revenue Service, room 6129, 1111 Constitution Avenue, NW., Washington, DC 20224.

FOR FURTHER INFORMATION CONTACT: Requests for additional information or copies of the regulations should be directed to Carolyn N. Brown at Internal Revenue Service, room 6129, 1111 Constitution Avenue, NW., Washington, DC 20224, or at (202) 622–6688, or through the Internet at *Carolyn.N.Brown@irs.gov.*

SUPPLEMENTARY INFORMATION:

Title: Limitations on Corporate Net Operating Loss.

OMB Number: 1545–1381.

Regulation Project Number: CO–49–88.

Abstract: This regulation provides rules for the allocation of a loss corporation's taxable income or net operating loss between the periods before and after ownership change

under section 382 of the Internal Revenue Code, including an election to make the allocation based on a closing of the books as of the change date.

Current Actions: There is no change to this existing regulation.

Type of Review: Extension of currently approved collection.

Affected Public: Business or other for-profit organizations.

Estimated Number of Respondents: 2,000.

Estimated Time per Respondent: 0.1 hours.

Estimated Total Annual Burden Hours: 200.

The following paragraph applies to all of the collections of information covered by this notice:

An agency may not conduct or sponsor, and a person is not required to respond to, a collection of information unless the collection of information displays a valid OMB control number. Books or records relating to a collection of information must be retained as long as their contents may become material in the administration of any internal revenue law. Generally, tax returns and tax return information are confidential, as required by 26 U.S.C. 6103.

Request for Comments: Comments submitted in response to this notice will be summarized and/or included in the request for OMB approval. All comments will become a matter of public record. Comments are invited on: (a) Whether the collection of information is necessary for the proper performance of the functions of the agency, including whether the information shall have practical utility; (b) the accuracy of the agency's estimate of the burden of the collection of information; (c) ways to enhance the quality, utility, and clarity of the information to be collected; (d) ways to minimize the burden of the collection of information on respondents, including through the use of automated collection techniques or other forms of information technology; and (e) estimates of capital or start-up costs and costs of operation, maintenance, and purchase of services to provide information.

Approved: March 13, 2008.

Glenn P. Kirkland,

IRS Reports Clearance Officer.

[FR Doc. E8–5941 Filed 3–24–08; 8:45 am]

BILLING CODE 4830–01–P

DEPARTMENT OF THE TREASURY

Internal Revenue Service

[REG–209106–89]

Proposed Collection; Comment Request for Regulation Project

AGENCY: Internal Revenue Service (IRS), Treasury.

ACTION: Notice and request for comments.

SUMMARY: The Department of the Treasury, as part of its continuing effort to reduce paperwork and respondent burden, invites the general public and other Federal agencies to take this opportunity to comment on proposed and/or continuing information collections, as required by the Paperwork Reduction Act of 1995, Public Law 104–13 (44 U.S.C. 3506(c)(2)(A)). Currently, the IRS is soliciting comments concerning an existing notice of proposed rulemaking, REG–209106–89, Changes With Respect to Prizes and Awards and Employee Achievement Awards (§ 1.74–1(c)).

DATES: Written comments should be received on or before May 27, 2008 to be assured of consideration.

ADDRESSES: Direct all written comments to Glenn P. Kirkland, Internal Revenue Service, Room 6129, 1111 Constitution Avenue, NW., Washington, DC 20224.

FOR FURTHER INFORMATION CONTACT: Requests for additional information or copies of regulation should be directed to Carolyn N. Brown, (202) 622–6688, Internal Revenue Service, Room 6129, 1111 Constitution Avenue, NW., Washington, DC 20224, or through the Internet at *Carolyn.N.Brown@irs.gov.*

SUPPLEMENTARY INFORMATION:

Title: Changes With Respect to Prizes and Awards and Employee Achievement Awards.

OMB Number: 1545–1100.

Regulation Project Number: REG–209106–89 (formerly EE–84–89).

Abstract: This regulation requires recipients of prizes and awards to maintain records to determine whether a qualifying designation has been made in accordance with section 74(b)(3) of the Internal Revenue Code. The affected public is prize and award recipients who seek to exclude the cost of a qualifying prize or award.

Current Actions: There is no change to this existing regulation.

Type of Review: Extension of a currently approved collection.

Affected Public: Individuals or households.

Estimated Number of Respondents: 5,100.

Estimated Time per Respondent: 15 minutes.

Estimated Total Annual Burden Hours: 1,275.

The following paragraph applies to all of the collections of information covered by this notice:

An agency may not conduct or sponsor, and a person is not required to respond to, a collection of information unless the collection of information displays a valid OMB control number. Books or records relating to a collection of information must be retained as long as their contents may become material in the administration of any internal revenue law. Generally, tax returns and tax return information are confidential, as required by 26 U.S.C. 6103.

Request for Comments: Comments submitted in response to this notice will be summarized and/or included in the request for OMB approval. All comments will become a matter of public record. Comments are invited on: (a) Whether the collection of information is necessary for the proper performance of the functions of the agency, including whether the information shall have practical utility; (b) the accuracy of the agency's estimate of the burden of the collection of information; (c) ways to enhance the quality, utility, and clarity of the information to be collected; (d) ways to minimize the burden of the collection of information on respondents, including through the use of automated collection techniques or other forms of information technology; and (e) estimates of capital or start-up costs and costs of operation, maintenance, and purchase of services to provide information.

Approved: March 11, 2008.

Glenn P. Kirkland,

IRS Reports Clearance Officer.

[FR Doc. E8–5942 Filed 3–24–08; 8:45 am]

BILLING CODE 4830–01–P

DEPARTMENT OF THE TREASURY

Internal Revenue Service

Proposed Collection; Comment Request for Form 8823

AGENCY: Internal Revenue Service (IRS), Treasury.

ACTION: Notice and request for comments.

SUMMARY: The Department of the Treasury, as part of its continuing effort to reduce paperwork and respondent burden, invites the general public and other Federal agencies to take this opportunity to comment on proposed and/or continuing information

collections, as required by the Paperwork Reduction Act of 1995, Public Law 104–13 (44 U.S.C. 3506(c)(2)(A)). Currently, the IRS is soliciting comments concerning Form 8823, Low-Income Housing Credit Agencies Report of Noncompliance or Building Disposition.

DATES: Written comments should be received on or before May 27, 2008 to be assured of consideration.

ADDRESSES: Direct all written comments to Glenn P. Kirkland, Internal Revenue Service, room 6129, 1111 Constitution Avenue, NW., Washington, DC 20224.

FOR FURTHER INFORMATION CONTACT: Requests for additional information or copies of the form and instructions should be directed to Carolyn N. Brown, (202) 622–6688, Internal Revenue Service, room 6129, 1111 Constitution Avenue, NW., Washington, DC 20224, or through the Internet at *Carolyn.N.Brown@irs.gov.*

SUPPLEMENTARY INFORMATION:

Title: Low-Income Housing Credit Agencies Report of Noncompliance or Building Disposition.

OMB Number: 1545–1204.

Form Number: 8823.

Abstract: Under Internal Revenue Code section 42(m)(1)(B)(iii), state housing credit agencies are required to notify the IRS of noncompliance with the low-income housing tax credit provisions. A separate form must be filed for each building that is not in compliance. The IRS uses this information to determine whether the low-income housing credit is being correctly claimed and whether there is any credit recapture.

Current Actions: Form 8823 was revised, adding 17 line items. This change resulted in an increase of 82,600 hours; making the new burden hours 372,200.

Type of Review: Revision of a currently approved collection.

Affected Public: State or local government housing credit agencies.

Estimated Number of Respondents: 20,000.

Estimated Time per Respondent: 18 hrs., 37 min.

Estimated Total Annual Burden Hours: 372,200.

The following paragraph applies to all of the collections of information covered by this notice:

An agency may not conduct or sponsor, and a person is not required to respond to, a collection of information unless the collection of information displays a valid OMB control number. Books or records relating to a collection of information must be retained as long as their contents may become material in the administration of any internal revenue law. Generally, tax returns and tax return information are confidential, as required by 26 U.S.C. 6103.

Request for Comments: Comments submitted in response to this notice will be summarized and/or included in the request for OMB approval. All comments will become a matter of public record. Comments are invited on: (a) Whether the collection of information is necessary for the proper performance of the functions of the agency, including whether the information shall have practical utility; (b) the accuracy of the agency's estimate of the burden of the collection of information; (c) ways to enhance the quality, utility, and clarity of the information to be collected; (d) ways to minimize the burden of the collection of information on respondents, including through the use of automated collection techniques or other forms of information technology; and (e) estimates of capital or start-up costs and costs of operation, maintenance, and purchase of services to provide information.

Approved: March 12, 2008.

Glenn P. Kirkland,

IRS Reports Clearance Officer.

[FR Doc. E8–5943 Filed 3–24–08; 8:45 am]

BILLING CODE 4830–01–P

DEPARTMENT OF THE TREASURY

Internal Revenue Service

Proposed Collection; Comment Request for Revenue Procedure 2002–15

AGENCY: Internal Revenue Service (IRS), Treasury.

ACTION: Notice and request for comments.

SUMMARY: The Department of the Treasury, as part of its continuing effort to reduce paperwork and respondent burden, invites the general public and other Federal agencies to take this opportunity to comment on proposed and/or continuing information collections, as required by the Paperwork Reduction Act of 1995, Public Law 104–13 (44 U.S.C. 3506(c)(2)(A)). Currently, the IRS is soliciting comments concerning Revenue Procedure 2002–15, Automatic Relief for Late Initial Entity Classification Elections—Check the Box.

DATES: Written comments should be received on or before May 27, 2008 to be assured of consideration.

ADDRESSES: Direct all written comments to Glenn Kirkland, Internal Revenue Service, room 6129, 1111 Constitution Avenue, NW., Washington, DC 20224.

FOR FURTHER INFORMATION CONTACT: Requests for copies of the regulations should be directed to Allan Hopkins at Internal Revenue Service, room 6129, 1111 Constitution Avenue, NW., Washington, DC 20224, or at (202) 622–6665, or through the Internet at *Allan.M.Hopkins@irs.gov.*

SUPPLEMENTARY INFORMATION:

Title: Automatic Relief for Late Initial Entity Classification Elections—Check the Box.

OMB Number: 1545–1771.

Revenue Procedure Number: Revenue Procedure 2002–15.

Abstract: Revenue Procedure 2002–15 provides that, in certain circumstances, taxpayers whose initial entity classification election was filed late can obtain relief by filing Form 8832 and attaching a statement explaining that the requirements of the revenue procedure have been met.

Current Actions: There are no changes being made to the revenue procedure at this time.

Type of Review: Extension of a currently approved collection.

Affected Public: Business or other for-profit organizations.

Estimated Number of Respondents: 100.

Estimated Time per Respondent: 1 hour.

Estimated Total Annual Burden Hours: 100.

The following paragraph applies to all the collections of information covered by this notice:

An agency may not conduct or sponsor, and a person is not required to respond to, a collection of information unless the collection of information displays a valid OMB control number.

Books or records relating to a collection of information must be retained as long as their contents may become material in the administration of any internal revenue law. Generally, tax returns and tax return information are confidential, as required by 26 U.S.C. 6103.

Request for Comments: Comments submitted in response to this notice will be summarized and/or included in the request for OMB approval. All comments will become a matter of public record. Comments are invited on: (a) Whether the collection of information is necessary for the proper performance of the functions of the agency, including whether the information shall have practical utility; (b) the accuracy of the agency's estimate of the burden of the collection of information; (c) ways to enhance the

quality, utility, and clarity of the information to be collected; (d) ways to minimize the burden of the collection of information on respondents, including through the use of automated collection techniques or other forms of information technology; and (e) estimates of capital or start-up costs and costs of operation, maintenance, and purchase of services to provide information.

Approved: March 11, 2008.

Glenn Kirkland,

IRS Reports Clearance Officer.

[FR Doc. E8–5945 Filed 3–24–08; 8:45 am]

BILLING CODE 4830–01–P

DEPARTMENT OF THE TREASURY

Internal Revenue Service

[REG–209365–89]

Proposed Collection; Comment Request for Regulation Project

AGENCY: Internal Revenue Service (IRS), Treasury.

ACTION: Notice and request for comments.

SUMMARY: The Department of the Treasury, as part of its continuing effort to reduce paperwork and respondent burden, invites the general public and other Federal agencies to take this opportunity to comment on proposed and/or continuing information collections, as required by the Paperwork Reduction Act of 1995, Public Law 104–13 (44 U.S.C. 3506(c)(2)(A)). Currently, the IRS is soliciting comments concerning an existing final regulation, Limitation on Passive Activity Losses and Credits—Treatment of Self-Charged Items of Income and Expense (Section 1.469–7(f)).

DATES: Written comments should be received on or before May 27, 2008 to be assured of consideration.

ADDRESSES: Direct all written comments to Glenn Kirkland, Internal Revenue Service, Room 6129, 1111 Constitution Avenue, NW., Washington, DC 20224.

FOR FURTHER INFORMATION CONTACT: Requests for copies of the regulations should be directed to Allan Hopkins at Internal Revenue Service, Room 6129, 1111 Constitution Avenue, NW., Washington, DC 20224, or at (202) 622–6665, or through the Internet at *Allan.M.Hopkins@irs.gov.*

SUPPLEMENTARY INFORMATION:

Title: Limitation on Passive Activity Losses and Credits—Treatment of Self-Charged Items of Income and Expense.

OMB Number: 1545–1244.

Regulation Project Number: REG–209365–89 (formerly PS–39–89).

Abstract: Section 1.469–7(f)(1) of this regulation permits entities to elect to avoid application of the regulation in the event the passthrough entity chooses to not have the income from leading transactions with owners of interests in the entity recharacterized as passive activity gross income. The IRS will use this information to determine whether the entity has made a proper timely election and to determine that taxpayers are complying with the election in the taxable year of the election and subsequent taxable years.

Current Actions: There is no change to this existing regulation.

Type of Review: Extension of currently approved collection.

Affected Public: Individuals and business or other for-profit organizations.

Estimated Number of Respondents: 1,000.

Estimated Time per Respondent: 6 minutes.

Estimated Total Annual Burden Hours: 100.

The following paragraph applies to all of the collections of information covered by this notice:

An agency may not conduct or sponsor, and a person is not required to respond to, a collection of information unless the collection of information displays a valid OMB control number. Books or records relating to a collection of information must be retained as long as their contents may become material in the administration of any internal revenue law. Generally, tax returns and tax return information are confidential, as required by 26 U.S.C. 6103.

Request for Comments: Comments submitted in response to this notice will be summarized and/or included in the request for OMB approval. All comments will become a matter of public record. Comments are invited on: (a) Whether the collection of information is necessary for the proper performance of the functions of the agency, including whether the information shall have practical utility; (b) the accuracy of the agency's estimate of the burden of the collection of information; (c) ways to enhance the quality, utility, and clarity of the information to be collected; (d) ways to minimize the burden of the collection of information on respondents, including through the use of automated collection techniques or other forms of information technology; and (e) estimates of capital or start-up costs and costs of operation, maintenance, and purchase of services to provide information.

Approved: March 11, 2008.

Glenn Kirkland,

IRS Reports Clearance Officer.

[FR Doc. E8–5947 Filed 3–24–08; 8:45 am]

BILLING CODE 4830–01–P

DEPARTMENT OF THE TREASURY

Internal Revenue Service

[LR–1214]

Proposed Collection; Comment Request For Regulation Project

AGENCY: Internal Revenue Service (IRS), Treasury.

ACTION: Notice and request for comments.

SUMMARY: The Department of the Treasury, as part of its continuing effort to reduce paperwork and respondent burden, invites the general public and other Federal agencies to take this opportunity to comment on proposed and/or continuing information collections, as required by the Paperwork Reduction Act of 1995, Public Law 104–13 (44 U.S.C. 3506(c)(2)(A)). Currently, the IRS is soliciting comments concerning an existing final regulation, LR–1214 (TD 7430), Discharge of Liens (§ 301.7425–3(b)(2)).

DATES: Written comments should be received on or before May 27, 2008 to be assured of consideration.

ADDRESSES: Direct all written comments to Glenn Kirkland, Internal Revenue Service, room 6129, 1111 Constitution Avenue, NW., Washington, DC 20224.

FOR FURTHER INFORMATION CONTACT: Requests for copies of the information collection should be directed to Allan Hopkins, at (202) 622–6665, or at Internal Revenue Service, room 6129, 1111 Constitution Avenue, NW., Washington, DC 20224, or through the Internet, at *Allan.M.Hopkins@irs.gov*.

SUPPLEMENTARY INFORMATION:

Title: Discharge of Liens.

OMB Number: 1545–0854.

Regulation Project Number: LR–1214.

Abstract: The Internal Revenue Service needs this information in processing a request to sell property subject to a tax lien to determine if the taxpayer has equity in the property. This information will be used to determine the amount, if any, to which the tax lien attaches.

Current Actions: There is no change to this existing regulation.

Type of Review: Extension of a currently approved collection.

Affected Public: Individuals, business or other for-profit organizations, and farms.

Estimated Number of Respondents: 500.

Estimated Time per Respondent: 24 minutes.

Estimated Total Annual Burden Hours: 200.

The following paragraph applies to all of the collections of information covered by this notice:

An agency may not conduct or sponsor, and a person is not required to respond to, a collection of information unless the collection of information displays a valid OMB control number. Books or records relating to a collection of information must be retained as long as their contents may become material in the administration of any internal revenue law. Generally, tax returns and tax return information are confidential, as required by 26 U.S.C. 6103.

Request for Comments: Comments submitted in response to this notice will be summarized and/or included in the request for OMB approval. All comments will become a matter of public record. Comments are invited on: (a) Whether the collection of information is necessary for the proper performance of the functions of the agency, including whether the information shall have practical utility; (b) the accuracy of the agency's estimate of the burden of the collection of information; (c) ways to enhance the quality, utility, and clarity of the information to be collected; (d) ways to minimize the burden of the collection of information on respondents, including through the use of automated collection techniques or other forms of information technology; and (e) estimates of capital or start-up costs and costs of operation, maintenance, and purchase of services to provide information.

Approved: March 11, 2008.

Glenn Kirkland,

IRS Reports Clearance Officer.

[FR Doc. E8–5948 Filed 3–24–08; 8:45 am]

BILLING CODE 4830–01–P

DEPARTMENT OF THE TREASURY

Internal Revenue Service

[REG–105346–03]

Proposed Collection: Comment Request for Regulation Project

AGENCY: Internal Revenue Service (IRS), Treasury.

ACTION: Notice and request for comments.

SUMMARY: The Department of the Treasury, as part of its continuing effort to reduce paperwork and respondent burden, invites the general public and other Federal agencies to take this opportunity to comment on proposed and/or continuing information collections, as required by the Paperwork Reduction Act of 1995, Public Law 104–13 (44 U.S.C. 3506(c)(2)(A)). Currently, the IRS is soliciting comments concerning proposed regulation, REG–105346–03, Partnership Equity for Services.

DATES: Written comments should be received on or before May 27, 2008 to be assured of consideration.

ADDRESSES: Direct all written comments to Glenn Kirkland, Internal Revenue Service, room 6129, 1111 Constitution Avenue, NW., Washington, DC 20224.

FOR FURTHER INFORMATION CONTACT: Requests for copies of this regulation should be directed to Allan Hopkins, at (202) 622–6665, or at Internal Revenue Service, room 6129, 1111 Constitution Avenue, NW., Washington, DC 20224, or through the Internet, at *Allan.M.Hopkins@irs.gov.*

SUPPLEMENTARY INFORMATION:

Title: Partnership Equity for Services.

OMB Number: 1545–1947.

Regulation Project Number: REG–105346–03.

Abstract: The regulations provide that the transfer of a partnership interest in connection with the performance of services is subject to section 83 of the Code and provide rules for coordinating section 83 with partnership taxation principles.

Current Actions: There is no change to this proposed regulation.

Type of Review: Extension of a currently approved collection.

Affected Public: Businesses or other for-profit organizations and individuals or households.

Estimated Number of Respondents: 150,000.

Estimated Total Burden Hours: 112,500.

The following paragraph applies to all of the collections of information covered by this notice:

An agency may not conduct or sponsor, and a person is not required to respond to, a collection of information unless the collection of information displays a valid OMB control number. Books or records relating to a collection of information must be retained as long as their contents may become material in the administration of any internal revenue law. Generally, tax returns and tax return information are confidential, as required by 26 U.S.C. 6103.

Request for Comments: Comments submitted in response to this notice will be summarized and/or included in the request for OMB approval. All comments will become a matter of public record. Comments are invited on: (a) Whether the collection of information is necessary for the proper performance of the functions of the agency, including whether the information shall have practical utility; (b) the accuracy of the agency's estimate of the burden of the collection of information; (c) ways to enhance the quality, utility, and clarity of the information to be collected; (d) ways to minimize the burden of the collection of information on respondents, including through the use of automated collection techniques or other forms of information technology; and (e) estimates of capital or start-up costs and costs of operation, maintenance, and purchase of services to provide information.

Approved: March 11, 2008.

Glenn Kirkland,

IRS Reports Clearance Officer.

[FR Doc. E8–5949 Filed 3–24–08; 8:45 am]

BILLING CODE 4830–01–P

DEPARTMENT OF THE TREASURY

Internal Revenue Service

Low Income Taxpayer Clinic Grant Program; Availability of 2008 Supplemental Grant Application Period

AGENCY: Internal Revenue Service (IRS), Treasury.

ACTION: Notice.

SUMMARY: This document contains a Notice that the IRS has made available a supplemental period within which organizations in select geographic areas may apply for a Low Income Taxpayer Clinic (LITC) matching grant for the remainder of the 2008 grant cycle (the 2008 grant cycle runs January 1, 2008, through December 31, 2008). The supplemental application period shall run from March 24, 2008, to April 24, 2008.

Despite the IRS's efforts to foster parity in availability and accessibility in the selection of organizations receiving LITC matching grants and the continued increase in clinic services nationwide, there remain communities that are underrepresented by clinics. For the supplemental application period, the IRS will focus on those geographic areas where there is limited or no clinic representation.

The IRS will award up to $300,000 in additional funding to qualifying organizations in the following underserved or underrepresented states or areas within a state:

State	Areas
California	Los Angeles County.
Colorado	Statewide.
Idaho	Boise.
Minnesota	Minneapolis.
Missouri	St Louis.
Mississippi	Statewide.
Nevada	Reno, Las Vegas.
New Mexico	Statewide.
Oregon	Central.
Pennsylvania	Northeast.
Texas	Brownsville, Laredo.

In order to be considered for a supplemental 2008 Low Income Taxpayer Clinic matching grant, a qualifying organization must be in a position to provide qualified services to taxpayers in these geographic areas. Qualifying organizations that provide representation for free or for a nominal fee to low income taxpayers involved in tax controversies with the IRS or that provide education on taxpayer rights and responsibilities to taxpayers for whom English is a second language can apply for a matching grant for the remainder of the 2008 grant cycle.

Examples of qualifying organizations include: (1) Clinical programs at accredited law, business or accounting schools, whose students may represent low income taxpayers in tax controversies with the IRS, and (2) organizations exempt from tax under I.R.C. 501(a) which represent low income taxpayers in tax controversies with the IRS or refer those taxpayers to qualified representatives.

DATES: Grant applications for the remainder of the 2008 grant cycle must be electronically filed or postmarked by April 24, 2008. Grant decisions will be made by June 1, 2008, and funds awarded can only be used for the remainder of the grant cycle.

ADDRESSES: Send completed grant applications to: Internal Revenue Service, Taxpayer Advocate Service, LITC Grant Program Administration Office, TA:LITC, 1111 Constitution Avenue, NW., Room 1034, Washington, DC 20224. Copies of the *2008 Grant Application Package and Guidelines*, IRS Publication 3319 (Rev. 5–2007), can be downloaded from the IRS Internet site at *http://www.irs.gov/advocate* or ordered by the IRS Distribution Center by calling 1–800–829–3676. Applicants can also file electronically at *http://www.grants.gov*. For applicants applying through the Federal Grants Web site, the Funding Number is TREAS–GRANTS–05208–002.

FOR FURTHER INFORMATION CONTACT: The LITC Program Office at (202) 622–4711 (not a toll-free number) or by e-mail at *LITCProgramOffice@irs.gov.*

SUPPLEMENTARY INFORMATION:

Background

Section 7526 of the Internal Revenue Code authorizes the IRS, subject to the availability of appropriated funds, to award organizations matching grants of up to $100,000 per year for the development, expansion, or continuation of qualified low income taxpayer clinics. Section 7526 authorizes the IRS to provide grants to qualified organizations that represent low income taxpayers in controversies with the IRS or inform individuals for whom English is a second language of their taxpayer rights and responsibilities. The IRS may award grants to qualifying organizations to fund one-year, two-year or three-year project periods. Grant funds may be awarded for start-up expenditures incurred by new clinics during the grant cycle.

The *2008 Grant Application Package and Guidelines*, Publication 3319 (Rev. 5–2007), outlines requirements for the operation of a qualifying LITC program and provides instructions on how to apply for a grant.

The costs of preparing and submitting an application are the responsibility of each applicant. Each application will be given due consideration and the LITC Program Office will mail notification letters to each applicant.

Selection Consideration

Applications that pass the eligibility screening process will be numerically ranked based on the information contained in their proposed program plan. Please note that the IRS Volunteer Income Tax Assistance (VITA) and Tax Counseling for the Elderly (TCE) Programs are independently funded and separate from the LITC Program. Organizations currently participating in the VITA or TCE Programs may be eligible to apply for a LITC grant if they meet the criteria and qualifications outlined in the *2008 Grant Application Package and Guidelines*, Publication 3319 (Rev. 5–2007). Organizations that seek to operate VITA and LITC Programs, or TCE and LITC Programs, must maintain separate and distinct programs even if co-located to ensure proper cost allocation for LITC grant funds and adherence to the rules and regulations of the VITA, TCE and LITC Programs, as appropriate.

Comments

Interested parties are encouraged to provide comments on the IRS's administration of the grant program on an ongoing basis. Comments may be sent to Internal Revenue Service, Taxpayer Advocate Service, Attn: Shawn Collins, LITC Program Office, TA:LITC, 1111 Constitution Avenue, NW., Room 1034, Washington, DC 20224.

Nina E. Olson,

National Taxpayer Advocate, Internal Revenue Service.

[FR Doc. E8–5944 Filed 3–24–08; 8:45 am]

BILLING CODE 4830–01–P

DEPARTMENT OF VETERANS AFFAIRS

[OMB Control No. 2900–0120]

Proposed Information Collection (Report of Treatment by Attending Physician) Activity: Comment Request

AGENCY: Veterans Benefits Administration, Department of Veterans Affairs.

ACTION: Notice.

SUMMARY: The Veterans Benefits Administration (VBA), Department of Veterans Affairs (VA), is announcing an opportunity for public comment on the proposed collection of certain information by the agency. Under the Paperwork Reduction Act (PRA) of 1995, Federal agencies are required to publish notice in the **Federal Register** concerning each proposed collection of information, including each proposed extension of a currently approved collection, and allow 60 days for public comment in response to the notice. This notice solicits comments on information needed to determine claimants' eligibility for disability insurance benefits.

DATES: Written comments and recommendations on the proposed collection of information should be received on or before May 27, 2008.

ADDRESSES: Submit written comments on the collection of information through *http://www.Regulations.gov;* or to Nancy J. Kessinger, Veterans Benefits Administration (20M35), Department of Veterans Affairs, 810 Vermont Avenue, NW., Washington, DC 20420 or e-mail *nancy.kessinger@va.gov.* Please refer to ''OMB Control No. 2900–0120 in any correspondence. During the comment period, comments may be viewed online through the Federal Docket Management System (FDMS) at *http://www.Regulations.gov.*

FOR FURTHER INFORMATION CONTACT: Nancy J. Kessinger at (202) 461–9769 or FAX (202) 275–5947.

SUPPLEMENTARY INFORMATION: Under the PRA of 1995 (Pub. L. 104–13; 44 U.S.C. 3501–3521), Federal agencies must

obtain approval from the Office of Management and Budget (OMB) for each collection of information they conduct or sponsor. This request for comment is being made pursuant to Section 3506(c)(2)(A) of the PRA.

With respect to the following collection of information, VBA invites comments on: (1) Whether the proposed collection of information is necessary for the proper performance of VBA's functions, including whether the information will have practical utility; (2) the accuracy of VBA's estimate of the burden of the proposed collection of information; (3) ways to enhance the quality, utility, and clarity of the information to be collected; and (4) ways to minimize the burden of the collection of information on respondents, including through the use of automated collection techniques or the use of other forms of information technology.

Title: Report of Treatment by Attending Physician, VA Form 29–551a.

OMB Control Number: 2900–0120.

Type of Review: Extension of a currently approved collection.

Abstract: VA Form 29–551a is used to collect information from attending physician to determine a claimant's eligibility for disability insurance benefits.

Affected Public: Individuals or households.

Estimated Annual Burden: 5,069 hours.

Estimated Average Burden per Respondent: 15 minutes.

Frequency of Response: On occasion.

Estimated Number of Respondents: 20,277.

Dated: March 13, 2008.

By direction of the Secretary.

Denise McLamb,

Program Analyst, Records Management Service.

[FR Doc. E8–5960 Filed 3–24–08; 8:45 am]

BILLING CODE 8320–01–P

DEPARTMENT OF VETERANS AFFAIRS

[OMB Control No. 2900–New]

Proposed Information Collection (SAR Application) Activity: Comment Request

AGENCY: Veterans Benefits Administration, Department of Veterans Affairs.

ACTION: Notice.

SUMMARY: The Veterans Benefits Administration (VBA), Department of Veterans Affairs (VA), is announcing an opportunity for public comment on the proposed collection of certain information by the agency. Under the Paperwork Reduction Act (PRA) of 1995, Federal agencies are required to publish notice in the **Federal Register** concerning each proposed collection of information, including each proposed new collection, and allow 60 days for public comment in response to the notice. This notice solicits comments information needed to nominate a servicer appraisal employee as a staff appraisal reviewer.

DATES: Written comments and recommendations on the proposed collection of information should be received on or before May 27, 2008.

ADDRESSES: Submit written comments on the collection of information through *http://www.Regulations.gov* or to Nancy J. Kessinger, Veterans Benefits Administration (20M35), Department of Veterans Affairs, 810 Vermont Avenue, NW., Washington, DC 20420 or e-mail to *nancy.kessinger@va.gov.* Please refer to ''OMB Control No. 2900–New'' in any correspondence. During the comment period, comments may be viewed online through the Federal Docket Management System (FDMS) at *http://www.Regulations.gov.*

FOR FURTHER INFORMATION CONTACT: Nancy J. Kessinger at (202) 461–9769 or FAX (202) 275–5947.

SUPPLEMENTARY INFORMATION: Under the PRA of 1995 (Pub. L. 104–13; 44 U.S.C. 3501–3521), Federal agencies must obtain approval from the Office of Management and Budget (OMB) for each collection of information they conduct or sponsor. This request for comment is being made pursuant to Section 3506(c)(2)(A) of the PRA.

With respect to the following collection of information, VBA invites comments on: (1) Whether the proposed collection of information is necessary for the proper performance of VBA's functions, including whether the information will have practical utility; (2) the accuracy of VBA's estimate of the burden of the proposed collection of information; (3) ways to enhance the quality, utility, and clarity of the information to be collected; and (4) ways to minimize the burden of the collection of information on respondents, including through the use of automated collection techniques or the use of other forms of information technology.

Title: Servicer's Staff Appraisal Reviewer (SAR) Application, VA Form 26–0829.

OMB Control Number: 2900—New.

Type of Review: New collection.

Abstract: VA Form 26–0829 is completed by servicers to nominate employees for approval as Staff Appraisal Reviewer (SAR). Servicers SAR's will have the authority to review real estate appraisals and to issue liquidation notices of value on behalf of VA. VA will also use the data collected to track the location of SARs when there is a change in employment.

Affected Public: Business or other for-profit.

Estimated Annual Burden: 45 hours.

Estimated Average Burden per Respondent: 5 minutes.

Frequency of Response: On occasion.

Estimated Number of Respondents: 537.

Dated: March 18, 2008.

By direction of the Secretary.

Denise McLamb,

Program Analyst, Records Management Service.

[FR Doc. E8–5975 Filed 3–24–08; 8:45 am]

BILLING CODE 8320–01–P

DEPARTMENT OF VETERANS AFFAIRS

[OMB Control No. 2900–0079]

Proposed Information Collection (Employment Questionnaire) Activity: Comment Request

AGENCY: Veterans Benefits Administration, Department of Veterans Affairs.

ACTION: Notice.

SUMMARY: The Veterans Benefits Administration (VBA), Department of Veterans Affairs (VA), is announcing an opportunity for public comment on the proposed collection of certain information by the agency. Under the Paperwork Reduction Act (PRA) of 1995, Federal agencies are required to publish notice in the **Federal Register** concerning each proposed collection of information, including each proposed extension of currently approved collection, and allow 60 days for public comment in response to the notice. This notice solicits comments for information needed to determine continued entitlement to benefits based on unemployment.

DATES: Written comments and recommendations on the proposed collection of information should be received on or before May 27, 2008.

ADDRESSES: Submit written comments on the collection of information through *http://www.Regulations.gov* or to Nancy J. Kessinger, Veterans Benefits Administration (20M35), Department of Veterans Affairs, 810 Vermont Avenue,

NW., Washington, DC 20420 or e-mail to *nancy.kessinger@va.gov.* Please refer to ''OMB Control No. 2900–0079'' in any correspondence. During the comment period, comments may be viewed online through the Federal Docket Management System (FDMS) at *http://www.Regulations.gov.*

FOR FURTHER INFORMATION CONTACT: Nancy J. Kessinger at (202) 461–9769 or FAX (202) 275–5947.

SUPPLEMENTARY INFORMATION: Under the PRA of 1995 (Pub. L. 104–13; 44 U.S.C. 3501–3521), Federal agencies must obtain approval from the Office of Management and Budget (OMB) for each collection of information they conduct or sponsor. This request for comment is being made pursuant to section 3506(c)(2)(A) of the PRA.

With respect to the following collection of information, VBA invites comments on: (1) Whether the proposed collection of information is necessary for the proper performance of VBA's functions, including whether the information will have practical utility; (2) the accuracy of VBA's estimate of the burden of the proposed collection of information; (3) ways to enhance the quality, utility, and clarity of the information to be collected; and (4) ways to minimize the burden of the collection of information on respondents, including through the use of automated collection techniques or the use of other forms of information technology.

Title: Employment Questionnaire, VA Forms 21–4140, 21–4140–1.

OMB Control Number: 2900–0079.

Type of Review: Extension of a currently approved collection.

Abstract: Claimants who are under the age of 60 and receiving individual unemployability compensation at 100 percent rate are required to complete VA Form 21–4140 and 21–4140–1 certifying that they are still unable to secure or follow a substantially gainful occupation because of a service-connected disability. VA will use the information collected to determine the claimant's continued entitlement to individual unemployability benefits.

Affected Public: Individuals or households.

Estimated Annual Burden: 10,833 hours.

Estimated Average Burden per Respondent: 5 minutes.

Frequency of Response: Annually.

Estimated Number of Respondents: 130,000.

Dated: March 13, 2008.

By direction of the Secretary.

Denise McLamb,

Program Analyst, Records Management Service.

[FR Doc. E8–5976 Filed 3–24–08; 8:45 am]

BILLING CODE 8320–01–P

DEPARTMENT OF VETERANS AFFAIRS

[OMB Control No. 2900–0469]

Proposed Information Collection (Certificate Showing Residence and Heirs of Deceased Veteran or Beneficiary) Activity: Comment Request

AGENCY: Veterans Benefits Administration, Department of Veterans Affairs.

ACTION: Notice.

SUMMARY: The Veterans Benefits Administration (VBA), Department of Veterans Affairs (VA), is announcing an opportunity for public comment on the proposed collection of certain information by the agency. Under the Paperwork Reduction Act (PRA) of 1995, Federal agencies are required to publish notice in the **Federal Register** concerning each proposed collection of information, including each proposed extension of a currently approved collection, and allow 60 days for public comment in response to the notice. This notice solicits comments on information needed to establish entitlement to Government Life insurance proceeds.

DATES: Written comments and recommendations on the proposed collection of information should be received on or before May 27, 2008.

ADDRESSES: Submit written comments on the collection of information through *http://www.Regulations.gov;* or to Nancy J. Kessinger, Veterans Benefits Administration (20M35), Department of Veterans Affairs, 810 Vermont Avenue, NW., Washington, DC 20420 or e-mail *nancy.kessinger@va.gov.* Please refer to ''OMB Control No. 2900–0469 in any correspondence. During the comment period, comments may be viewed online through the Federal Docket Management System (FDMS) at *http://www.Regulations.gov.*

FOR FURTHER INFORMATION CONTACT: Nancy J. Kessinger at (202) 461–9769 or FAX (202) 275–5947.

SUPPLEMENTARY INFORMATION: Under the PRA of 1995 (Pub. L. 104–13; 44 U.S.C. 3501–3521), Federal agencies must obtain approval from the Office of Management and Budget (OMB) for each collection of information they conduct or sponsor. This request for comment is being made pursuant to Section 3506(c)(2)(A) of the PRA.

With respect to the following collection of information, VBA invites comments on: (1) Whether the proposed collection of information is necessary for the proper performance of VBA's functions, including whether the information will have practical utility; (2) the accuracy of VBA's estimate of the burden of the proposed collection of information; (3) ways to enhance the quality, utility, and clarity of the information to be collected; and (4) ways to minimize the burden of the collection of information on respondents, including through the use of automated collection techniques or the use of other forms of information technology.

Title: Certificate Showing Residence and Heirs of Deceased Veteran or Beneficiary, VA Form 29–541.

OMB Control Number: 2900–0469.

Type of Review: Extension of a currently approved collection.

Abstract: VA uses the information collected on VA Form 29–541 to establish a claimant's entitlement to Government Life Insurance proceeds in estate cases when formal administration of the estate is not required.

Affected Public: Individuals or households.

Estimated Annual Burden: 1,039 hours.

Estimated Average Burden per Respondent: 30 minutes.

Frequency of Response: On occasion.

Estimated Number of Respondents: 2,078.

Dated: March 13, 2008.

By direction of the Secretary.

Denise McLamb,

Program Analyst, Records Management Service.

[FR Doc. E8–5977 Filed 3–24–08; 8:45 am]

BILLING CODE 8320–01–P

DEPARTMENT OF VETERANS AFFAIRS

[OMB Control No. 2900–0149]

Agency Information Collection (Application for Conversion) Activities Under OMB Review

AGENCY: Veterans Benefits Administration, Department of Veterans Affairs.

ACTION: Notice.

SUMMARY: In compliance with the Paperwork Reduction Act (PRA) of 1995 (44 U.S.C. 3501–3521), this notice announces that the Veterans Benefits Administration (VBA), Department of

Veterans Affairs, will submit the collection of information abstracted below to the Office of Management and Budget (OMB) for review and comment. The PRA submission describes the nature of the information collection and its expected cost and burden; it includes the actual data collection instrument.

DATES: Comments must be submitted on or before April 24, 2008.

ADDRESSES: Submit written comments on the collection of information through *http://www.Regulations.gov;* or to VA's OMB Desk Officer, OMB Human Resources and Housing Branch, New Executive Office Building, Room 10235, Washington, DC 20503, (202) 395–7316. Please refer to ''OMB Control No. 2900–0149'' in any correspondence.

FOR FURTHER INFORMATION CONTACT: Denise McLamb, Records Management Service (005R1B), Department of Veterans Affairs, 810 Vermont Avenue, NW., Washington, DC 20420, (202) 461–7485, fax (202) 273–0443 or e-mail *denise.mclamb@mail.va.gov.* Please refer to ''OMB Control No. 2900–2900–0149.''

SUPPLEMENTARY INFORMATION:

Title: Application for Conversion (Government Life Insurance), VA Form 29–0152.

OMB Control Number: 2900–0149.

Type of Review: Extension of a currently approved collection.

Abstract: VA Form 29–0152 is completed by insured veterans to convert his/her term insurance to a permanent plan of insurance.

An agency may not conduct or sponsor, and a person is not required to respond to a collection of information unless it displays a currently valid OMB control number. The **Federal Register** Notice with a 60-day comment period soliciting comments on this collection of information was published on January 17, 2008 at pages 3323–3324.

Affected Public: Individuals or households.

Estimated Annual Burden: 1,125 hours.

Estimated Average Burden per Respondent: 15 minutes.

Frequency of Response: On occasion.

Estimated Number of Respondents: 4,500.

Dated: March 18, 2008.

By direction of the Secretary.

Denise McLamb,

Program Analyst, Records Management Service.

[FR Doc. E8–5985 Filed 3–24–08; 8:45 am]

BILLING CODE 8320–01–P

DEPARTMENT OF VETERANS AFFAIRS

[OMB Control No. 2900–0159]

Agency Information Collection (Matured Endowment Notification) Activities Under OMB Review

AGENCY: Veterans Benefits Administration, Department of Veterans Affairs.

ACTION: Notice.

SUMMARY: In compliance with the Paperwork Reduction Act (PRA) of 1995 (44 U.S.C. 3501–3521), this notice announces that the Veterans Benefits Administration (VBA), Department of Veterans Affairs, will submit the collection of information abstracted below to the Office of Management and Budget (OMB) for review and comment. The PRA submission describes the nature of the information collection and its expected cost and burden; it includes the actual data collection instrument.

DATE: Comments must be submitted on or before April 24, 2008.

ADDRESSES: Submit written comments on the collection of information through *http://www.Regulations.gov;* or to VA's OMB Desk Officer, OMB Human Resources and Housing Branch, New Executive Office Building, Room 10235, Washington, DC 20503, (202) 395–7316. Please refer to ''OMB Control No. 2900–0159'' in any correspondence.

FOR FURTHER INFORMATION CONTACT: Denise McLamb, Records Management Service (005R1B), Department of Veterans Affairs, 810 Vermont Avenue, NW., Washington, DC 20420, (202) 461–7485, fax (202) 273–0443 or e-mail *denise.mclamb@mail.va.gov.* Please refer to ''OMB Control No. 2900–2900–0159.''

SUPPLEMENTARY INFORMATION:

Title: Matured Endowment Notification, VA Form 29–5767.

OMB Control Number: 2900–0159.

Type of Review: Extension of a currently approved collection.

Abstract: VA Form 29–5767 is used to notify the insured that his or her endowment policy has matured. The form also request that the insured elect whether he or she prefer to receive the proceeds in monthly installment or in a combination of cash and monthly installment and to designate a beneficiary(ies) to receive the remaining proceeds.

An agency may not conduct or sponsor, and a person is not required to respond to a collection of information unless it displays a currently valid OMB control number. The **Federal Register** Notice with a 60-day comment period soliciting comments on this collection of information was published on January 17, 2008 at page 3324.

Estimated Annual Burden: 2,867 hours.

Estimated Average Burden per Respondent: 20 minutes.

Frequency of Response: On occasion.

Estimated Number of Respondents: 8,600.

Dated: March 18, 2008.

By direction of the Secretary.

Denise McLamb,

Program Analyst, Records Management Service.

[FR Doc. E8–5991 Filed 3–24–08; 8:45 am]

BILLING CODE 8320–01–P

DEPARTMENT OF VETERANS AFFAIRS

[OMB Control No. 2900–0166]

Proposed Information Collection (Application for Ordinary Life Insurance) Activity: Comment Request

AGENCY: Veterans Benefits Administration, Department of Veterans Affairs.

ACTION: Notice.

SUMMARY: The Veterans Benefits Administration (VBA), Department of Veterans Affairs (VA), is announcing an opportunity for public comment on the proposed collection of certain information by the agency. Under the Paperwork Reduction Act (PRA) of 1995, Federal agencies are required to publish notice in the **Federal Register** concerning each proposed collection of information, including each extension of a currently approved collection, and allow 60 days for public comment in response to the notice. This notice solicits comments on information needed to determine eligibility for replacement insurance.

DATES: Written comments and recommendations on the proposed collection of information should be received on or before May 27, 2008.

ADDRESSES: Submit written comments on the collection of information through *http://www.Regulations.gov;* or to Nancy J. Kessinger, Veterans Benefits Administration (20M35), Department of Veterans Affairs, 810 Vermont Avenue, NW., Washington, DC 20420 or e-mail *nancy.kessinger@va.gov.* Please refer to ''OMB Control No. 2900–0166 in any correspondence. During the comment period, comments may be viewed online through the Federal Docket Management System (FDMS) at *http://www.Regulations.gov.*

FOR FURTHER INFORMATION CONTACT: Nancy J. Kessinger at (202) 461–9769 or FAX (202) 275–5947.

SUPPLEMENTARY INFORMATION: Under the PRA of 1995 (Pub. L. 104–13; 44 U.S.C. 3501—3521), Federal agencies must obtain approval from the Office of Management and Budget (OMB) for each collection of information they conduct or sponsor. This request for comment is being made pursuant to Section 3506(c)(2)(A) of the PRA.

With respect to the following collection of information, VBA invites comments on: (1) Whether the proposed collection of information is necessary for the proper performance of VBA's functions, including whether the information will have practical utility; (2) the accuracy of VBA's estimate of the burden of the proposed collection of information; (3) ways to enhance the quality, utility, and clarity of the information to be collected; and (4) ways to minimize the burden of the collection of information on respondents, including through the use of automated collection techniques or the use of other forms of information technology.

Titles:

a. Application for Ordinary Life Insurance, Replacement Insurance for Modified Life Reduced at Age 65, National Service Life Insurance, VA Form 29–8485.

b. Application for Ordinary Life Insurance, Replacement Insurance for Modified Life Reduced at Age 70, National Service Life Insurance, VA Form 29–8485a.

c. Application for Ordinary Life Insurance, Replacement Insurance for Modified Life Reduced at Age 65, National Service Life Insurance, VA Form 29–8700.

d. Application for Ordinary Life Insurance, Replacement Insurance for Modified Life Reduced at Age 70, National Service Life Insurance, VA Form 29–8701.

e. Information About Modified Life Reduction, VA Forms 29–8700a–e and VA Forms 29–8701a–e.

OMB Control Number: 2900–0166.

Type of Review: Extension of a currently approved collection.

Abstract: Policyholder's use the forms to apply for replacement of Modified Life insurance. Modified Life insurance coverage is reduced automatically by one-half from its present face value on the day before a policyholder's 65th and 70th birthdays. Policyholder's who wish to maintain the same amount of coverage must purchase whole life insurance prior to their 65th and 70th birthdays to replace the coverage that will be lost when the Modified Life insurance is reduce.

Affected Public: Individuals or households.

Estimated Annual Burden: 1,284 hours.

Estimated Average Burden per Respondent: 5 minutes.

Frequency of Response: One time.

Estimated Number of Respondents: 15,400.

Dated: March 13, 2008.

By direction of the Secretary.

Denise McLamb,

Program Analyst, Records Management Service.

[FR Doc. E8–5994 Filed 3–24–08; 8:45 am]

BILLING CODE 8320–01–P

DEPARTMENT OF VETERANS AFFAIRS

[OMB Control No. 2900–0215]

Agency Information Collection (Request for Information To Make Direct Payment to Child Reaching Majority) Activities Under OMB Review

AGENCY: Veterans Benefits Administration, Department of Veterans Affairs.

ACTION: Notice.

SUMMARY: In compliance with the Paperwork Reduction Act (PRA) of 1995 (44 U.S.C. 3501–3521), this notice announces that the Veterans Benefits Administration (VBA), Department of Veterans Affairs, will submit the collection of information abstracted below to the Office of Management and Budget (OMB) for review and comment. The PRA submission describes the nature of the information collection and its expected cost and burden; it includes the actual data collection instrument.

DATE: Comments must be submitted on or before April 24, 2008.

ADDRESSES: Submit written comments on the collection of information through *http://www.Regulations.gov* or to VA's OMB Desk Officer, OMB Human Resources and Housing Branch, New Executive Office Building, Room 10235, Washington, DC 20503, (202) 395–7316. Please refer to ''OMB Control No. 2900–0215'' in any correspondence.

FOR FURTHER INFORMATION CONTACT: Denise McLamb, Records Management Service (005R1B), Department of Veterans Affairs, 810 Vermont Avenue, NW., Washington, DC 20420, (202) 461–7485, FAX (202) 273–0443 or e-mail *denise.mclamb@mail.va.gov.* Please refer to ''OMB Control No. 2900–0215.''

SUPPLEMENTARY INFORMATION:

Title: Request for Information To Make Direct Payment to Child Reaching Majority, VA Form Letter 21–863.

OMB Control Number: 2900–0215.

Type of Review: Extension of a currently approved collection.

Abstract: VA Form Letter 21–863 is used to determine a schoolchild's continued eligibility to death benefits and eligibility to receive direct payment at the age of majority. Death pension or dependency and indemnity compensation is paid to an eligible veteran's child when there is not an eligible surviving spouse and the child is between the ages of 18 and 23 is attending school. Until the child reaches the age of majority, payment is made to a custodian or fiduciary on behalf of the child. An unmarried schoolchild, who is not incompetent, is entitled to begin receiving direct payment on the age of majority.

An agency may not conduct or sponsor, and a person is not required to respond to a collection of information unless it displays a currently valid OMB control number. The **Federal Register** Notice with a 60-day comment period soliciting comments on this collection of information was published on January 17, 2008, at page 3322.

Affected Public: Individuals or households.

Estimated Annual Burden: 3 hours.

Estimated Average Burden per Respondent: 10 minutes.

Frequency of Response: One-time.

Estimated Number of Respondents: 20.

Dated: March 18, 2008.

By direction of the Secretary.

Denise McLamb,

Program Analyst, Records Management Service.

[FR Doc. E8–5996 Filed 3–24–08; 8:45 am]

BILLING CODE 8320–01–P

DEPARTMENT OF VETERANS AFFAIRS

[OMB Control No. 2900–0049]

Proposed Information Collection (Approval of School Attendance) Activity: Comment Request

AGENCY: Veterans Benefits Administration, Department of Veterans Affairs.

ACTION: Notice.

SUMMARY: The Veterans Benefits Administration (VBA), Department of Veterans Affairs (VA), is announcing an opportunity for public comment on the proposed collection of certain information by the agency. Under the

Paperwork Reduction Act (PRA) of 1995, Federal agencies are required to publish notice in the **Federal Register** concerning each proposed collection of information, including each proposed extension of a currently approved collection, and allow 60 days for public comment in response to the notice. This notice solicits comments for information necessary to determine entitlement to compensation and pension benefits for a child between the ages of 18 and 23 attending school.

DATES: Written comments and recommendations on the proposed collection of information should be received on or before May 27, 2008.

ADDRESSES: Submit written comments on the collection of information through *http://www.Regulations.gov* or to Nancy J. Kessinger, Veterans Benefits Administration (20M35), Department of Veterans Affairs, 810 Vermont Avenue, NW., Washington, DC 20420 or e-mail to *nancy.kessinger@va.gov.* Please refer to ''OMB Control No. 2900–0049'' in any correspondence. During the comment period, comments may be viewed online through the Federal Docket Management System (FDMS) at: *http://www.Regulations.gov.*

FOR FURTHER INFORMATION CONTACT: Nancy J. Kessinger at (202) 461–9769 or Fax (202) 275–5947.

SUPPLEMENTARY INFORMATION: Under the PRA of 1995 (Pub. L. 104–13; 44 U.S.C. 3501–3521), Federal agencies must obtain approval from the Office of Management and Budget (OMB) for each collection of information they conduct or sponsor. This request for comment is being made pursuant to section 3506(c)(2)(A) of the PRA.

With respect to the following collection of information, VBA invites comments on: (1) Whether the proposed collection of information is necessary for the proper performance of VBA's functions, including whether the information will have practical utility; (2) the accuracy of VBA's estimate of the burden of the proposed collection of information; (3) ways to enhance the quality, utility, and clarity of the information to be collected; and (4) ways to minimize the burden of the collection of information on respondents, including through the use of automated collection techniques or the use of other forms of information technology.

Titles:

a. Request for Approval of School Attendance, VA Form 21–674 and 21–674c.

b. School Attendance Report, VA Form 21–674b.

OMB Control Number: 2900–0049.

Type of Review: Extension of a currently approved collection.

Abstract: Recipients of disability compensation, dependency and indemnity compensation, disability pension, and death pension are entitled to benefits for eligible children between the ages of 18 and 23 who are attending school. VA Forms 21–674, 21–674c and 21–674b are used to confirm school attendance of children for whom VA compensation or pension benefits are being paid and to report any changes in entitlement factors, including marriages, a change in course of instruction and termination of school attendance.

Affected Public: Individuals or households.

Estimated Annual Burden:

a. VA Forms 21–674 and 674c—34,500 hours.

b. VA Form 21–674b—3,292 hours.

Estimated Average Burden Per Respondent:

a. VA Forms 21–674 and 674c—15 minutes.

b. VA Form 21–674b—5 minutes.

Frequency of Response: On occasion.

Estimated Number of Respondents:

a. VA Forms 21–674 and 674c—138,000 hours.

b. VA Form 21–674b—39,500 hours.

Dated: March 18, 2008.

By direction of the Secretary.

Denise McLamb,

Program Analyst, Records Management Service.

[FR Doc. E8–6034 Filed 3–24–08; 8:45 am]

BILLING CODE 8320–01–P

DEPARTMENT OF VETERANS AFFAIRS

[OMB Control No. 2900–0662]

Agency Information Collection (Civil Rights Discrimination Complaint) Activities Under OMB Review

AGENCY: Veterans Health Administration, Department of Veterans Affairs.

ACTION: Notice.

SUMMARY: In compliance with the Paperwork Reduction Act (PRA) of 1995 (44 U.S.C. 3501–3521), this notice announces that the Veterans Health Administration (VHA), Department of Veterans Affairs, has submitted the collection of information abstracted below to the Office of Management and Budget (OMB) for review and comment. The PRA submission describes the nature of the information collection and its expected cost and burden and includes the actual data collection instrument.

DATES: Comments must be submitted on or before April 24, 2008.

ADDRESSES: Submit written comments on the collection of information through *www.Regulations.gov* or to VA's OMB Desk Officer, OMB Human Resources and Housing Branch, New Executive Office Building, Room 10235, Washington, DC 20503 (202) 395–7316. Please refer to ''OMB Control No. 2900–0662'' in any correspondence.

FOR FURTHER INFORMATION CONTACT: Denise McLamb, Records Management Service (005R1B), Department of Veterans Affairs, 810 Vermont Avenue, NW., Washington, DC 20420, (202) 273–0443, fax (202) 461–7485 or e-mail *denise.mclamb@mail.va.gov.* Please refer to ''OMB Control No. 2900–0662.''

SUPPLEMENTARY INFORMATION:

Title: Civil Rights Discrimination Complaint, VA Form 10–0381.

OMB Control Number: 2900–0662.

Type of Review: Extension of a currently approved collection.

Abstract: Veterans and other VHA customers who believe that their civil rights were violated by agency employees while receiving medical care or services in VA medical centers, or institutions such as state homes receiving federal financial assistance from VA, complete VA Form 10–0381 to file a formal complaint of the alleged discrimination.

An agency may not conduct or sponsor, and a person is not required to respond to a collection of information unless it displays a currently valid OMB control number. The **Federal Register** Notice with a 60-day comment period soliciting comments on this collection of information was published on January 8, 2008 at pages 1399–1400.

Affected Public: Individuals or households.

Estimated Total Annual Burden: 46 hours.

Estimated Average Burden Per Respondent: 15 minutes.

Frequency of Response: On occasion.

Estimated Number of Respondents: 183.

Dated: March 13, 2008.

By direction of the Secretary.

Denise McLamb,

Program Analyst, Records Management Service.

[FR Doc. E8–6075 Filed 3–24–08; 8:45 am]

BILLING CODE 8320–01–P

DEPARTMENT OF VETERANS AFFAIRS

Privacy Act of 1974

AGENCY: Department of Veterans Affairs (VA).

ACTION: Notice of New System of Records.

SUMMARY: The Privacy Act of 1974 (5 U.S.C. 552(e)(4)) requires that all agencies publish in the **Federal Register** a notice of the existence and character of their systems of records. Notice is hereby given that the Department of Veterans Affairs (VA) is establishing a new system of records entitled ''Enrollment and Eligibility Records-VA'' (147VA16) formerly included and described in the ''Health Eligibility Records-VA'' (89VA19) system of records last amended in the **Federal Register** on May 18, 2001, which has been renamed, ''Income Verification Records'' 66 FR 27752 (May 18, 2001).

DATES: Comments on this new system of records must be received no later than April 24, 2008. If no public comment is received, or unless otherwise published in the **Federal Register** by VA, the new system will become effective April 24, 2008.

ADDRESSES: Written comments may be submitted through *http://www.Regulations.gov;* by mail or hand delivery to the Director, Regulations Management (00REG), Department of Veterans Affairs, 810 Vermont Ave., NW., Room 1068, Washington, DC 20420; or by fax to (202) 273–9026. Copies of comments received will be available for public inspection in the Office of Regulation Policy and Management, Room 1063B, between the hours of 8 a.m. and 4:30 p.m. Monday through Friday (except holidays). Please call (202) 273–9515 for an appointment. In addition, during the comment period, comments may be viewed online through the Federal Docket Management System (FDMS) at *http://www.Regulations.gov.*

FOR FURTHER INFORMATION CONTACT: Stephania H. Putt, Veterans Health Administration (VHA) Privacy Officer, Department of Veterans Affairs, 810 Vermont Avenue, NW., Washington, DC 20420, telephone (704) 245–2492.

SUPPLEMENTARY INFORMATION: *Background:* Title 38 U.S.C. Section 1705 requires VHA to establish a system of annual patient enrollment to manage the delivery of health care.

I. Description of Proposed Systems of Records

This system of records is used to establish and maintain applicants' records necessary to support the delivery of health care benefits; establish applicants' eligibility for VA health care benefits; to operate an annual enrollment system; provide eligible veterans with an identification card; collect from applicants' health insurance provider for care of their nonservice-connected conditions; provide educational materials related to VA health care benefits, enrollment, and eligibility; respond to veteran and non-veteran inquiries related to VA health care benefits, enrollment, and eligibility; and compile management reports.

II. Proposed Routine Use Disclosures of Data in the System

To the extent that records contained in the system include information protected by 45 CFR Parts 160 and 164, (i.e., individually-identifiable health information) that information cannot be disclosed under a routine use unless there is also specific regulatory authority in 45 CFR Parts 160 and 164 permitting disclosure. VA may disclose protected health information pursuant to the following routine uses where required by law, or required or permitted by 45 CFR Parts 160 and 164.

1. VA may disclose information from this system of records, as deemed necessary and proper, to named individuals serving as accredited service organization representatives and other individuals named as approved agents or attorneys for a documented purpose and period of time, to aid beneficiaries in the preparation and presentation of their cases during verification and/or due process procedures and in the presentation and prosecution of claims under laws administered by VA.

2. VA may disclose on its own initiative any information in this system, except the names and home addresses of veterans and their dependents, which is relevant to a suspected or reasonably imminent violation of law, whether civil, criminal or regulatory in nature and whether arising by general or program statute or by regulation, rule or order issued pursuant thereto, to a Federal, State, local, or foreign agency charged with the responsibility of investigating or prosecuting such violation, or charged with enforcing or implementing the statute, regulation, rule or order. On its own initiative, VA may also disclose the names and addresses of veterans and their dependents to a Federal agency charged with the responsibility of investigating or prosecuting civil, criminal or regulatory violations of law, or charged with enforcing or implementing the statute, regulation, rule or order issued pursuant thereto.

3. VA may disclose information to private attorneys representing veterans rated incompetent in conjunction with issuance of Certificates of Incompetence, in the course of presenting evidence to a court, magistrate or administrative tribunal in matters of guardianship, inquests and commitments, and to probation and parole officers in connection with Court required duties.

4. VA may disclose information to a VA Federal fiduciary or a guardian *ad litem* in relation to his or her representation of a veteran, but only to the extent necessary to fulfill the duties of the VA Federal fiduciary or the guardian *ad litem.*

5. VA may disclose information to attorneys, insurance companies, employers, third parties liable or potentially liable under health plan contracts, and courts, boards, or commissions, but only to the extent necessary to aid VA in the preparation, presentation, and prosecution of claims authorized under Federal, State, or local laws, and regulations promulgated hereunder.

6. VA may disclose information in this system of records to the Department of Justice (DoJ), either on VA's initiative or in response to DoJ's request for the information, after either VA or DoJ determines that such information is relevant to DoJ's representation of the United States or any of its components in legal proceedings before a court or adjudicative body, provided that, in each case, the agency also determines prior to disclosure that disclosure of the records to the Department of Justice is a use of the information contained in the records that is compatible with the purpose for which VA collected the records. VA, on its own initiative, may disclose records in this system of records in legal proceedings before a court or administrative body after determining that the disclosure of the records to the court or administrative body is a use of the information contained in the records that is compatible with the purpose for which VA collected the records.

7. VA may disclose information to the National Archives and Records Administration (NARA) and General Services Administration (GSA) in records management inspections conducted under authority of title 44 United States Code.

8. VA may disclose information for the purposes identified below to a third party, except consumer reporting agencies, in connection with any proceeding for the collection of an amount owed to the United States by virtue of a person's participation in any benefit program administered by VA. Information may be disclosed under this routine use only to the extent that it is reasonably necessary for the following purposes: (a) To assist VA in the collection of costs of services provided

individuals not entitled to such services; (b) to initiate civil or criminal legal actions for collecting amounts owed to the United States and (c) for prosecuting individuals who willfully or fraudulently obtained or seek to obtain title 38 medical benefits. This disclosure is consistent with 38 U.S.C. 5701(b)(6).

9. VA may disclose the name and address of a veteran, other information as is reasonably necessary to identify such veteran, and any information concerning the veteran's indebtedness to the United States by virtue of the person's participation in a benefits program administered by VA to a consumer reporting agency for purposes of assisting in the collection of such indebtedness, provided that the provisions of 38 U.S.C. 5701(g)(4) have been met.

10. VA may disclose information to individuals, organizations, private or public agencies, or other entities with whom VA has a contract or agreement to perform such services as VA may deem practicable for the purposes of laws administered by VA in order for the individual or entity with whom VA has an agreement or contract to perform the services of the contract or agreement. This routine use includes disclosures by the individual or entity performing the service for VA to any secondary individual or entity to perform an activity that is necessary for the individual or entity with whom VA has a contract or agreement to provide the service to VA.

11. The record of an individual who is covered by a system of records may be disclosed to a member of Congress, or a staff person acting for the member, when the member or staff person requests the record on behalf of and at the written request of the individual.

12. VA may disclose information to other Federal agencies to assist such agencies in preventing and detecting possible fraud or abuse by individuals in their operations and programs.

13. VA may, on its own initiative, disclose any information or records to appropriate agencies, entities, and persons when (1) VA suspects or has confirmed that the integrity or confidentiality of information in the system of records has been compromised; (2) the Department has determined that as a result of the suspected or confirmed compromise, there is a risk of embarrassment or harm to the reputations of the record subjects, harm to economic or property interests, identity theft or fraud, or harm to the security, confidentiality, or integrity of this system or other systems or programs (whether maintained by the Department or another agency or entity) that rely upon the potentially compromised information; and (3) the disclosure is to agencies, entities, or persons who VA determines are reasonably necessary to assist or carry out the Department's efforts to respond to the suspected or confirmed compromise and prevent, minimize, or remedy such harm. This routine use permits disclosure is required by the Memorandum from the Office of Management and Budget (M–07–16), dated May 22, 2007, of all systems of records of all federal agencies. This routine use also permits disclosures by the Department to respond to a suspected or confirmed data breach, including the conduct of any risk analysis or provision of credit protection services as provided in 38 U.S.C. 5724, as the terms are defined in 38 U.S.C. 5727.

III. Compatibility of the Proposed Routine Uses

The Privacy Act permits VA to disclose information about individuals without their consent for a routine use when the information will be used for a purpose that is compatible with the purpose for which we collected the information. In all of the routine use disclosures described above, the recipient of the information will use the information in connection with a matter relating to one of VA's programs or to provide a benefit to VA, or disclosure is required by law.

Under section 264, Subtitle F of Title II of the Health Insurance Portability and Accountability Act of 1996 (HIPAA), Public Law 104–191, 100 Stat. 1936, 2033–34 (1996), the United States Department of Health and Human Services (HHS) published a final rule, as amended, establishing Standards for Privacy of Individually-Identifiable Health Information, 45 CFR Parts 160 and 164. VA's Veterans Health Administration may not disclose individually-identifiable health information (as defined in HIPAA, 42 U.S.C. 1320(d)(6), and the HIPAA Privacy Rule, 45 CFR 164.501) pursuant to a routine use unless either: (a) the disclosure is required by law, or (b) the disclosure is permitted or required by the HIPAA Privacy Rule. The disclosures of individually-identifiable health information contemplated in the routine uses published in this system of records notice are permitted under the Privacy Rule or required by law. In accordance with the requirements of the Privacy Act, VA is publishing these routine uses and adding a preliminary paragraph to the routine uses portion of the system of records notice stating that any disclosure pursuant to the routine uses in this system of records notice must be either required by law or permitted by the Privacy Rule before VHA may disclose the covered information.

The notice of intent to publish an advance copy of the system notice has been sent to the appropriate Congressional committees and to the Director of the Office of Management and Budget (OMB) as required by 5 U.S.C. 552a(r) (Privacy Act) and guidelines issued by OMB (65 FR 77677), December 12, 2000.

Approved: March 11, 2008.

Gordon H. Mansfield,

Deputy Secretary of Veterans Affairs.

147VA16

SYSTEM NAME:

Enrollment and Eligibility Records—VA.

SYSTEM LOCATION:

Records are maintained at the Health Eligibility Center (HEC) in Atlanta, Georgia, the Austin Automation Center (AAC) in Austin, Texas, at each VA health care facility as described in the VA system of records entitled ''Patient Medical Records—24VA19,'' and at the Veteran Identification Card (VIC) National Card Management Directory (NCMD) located at the Hines, Illinois, and Silver Spring, Maryland VA facilities. Electronic and magnetic records are also stored at contracted facilities for storage and back-up purposes.

CATEGORIES OF INDIVIDUALS COVERED BY THIS SYSTEM:

The records contain information on individuals who have applied for or who have received VA health care benefits under title 38, United States Code, chapter 17; the records also include veterans, their spouses and dependents as provided for in other provisions of title 38, United States Code.

CATEGORIES OF RECORDS IN THE SYSTEM:

The categories of records in this system may include: Medical benefit applications, eligibility and enrollment information, including information obtained from Veterans Benefits Administration automated records such as the Compensation, Pension, Education and Rehabilitation Records—VA'' (58VA21/22), and VIC information including applicant's name, address(es), date of birth, Social Security number, race and ethnicity, claim number, ICN, applicant's image, preferred facility and facility requesting a VIC, names,

addresses and phone numbers of persons to contact in the event of a medical emergency, family information including spouse and dependent(s) name(s), address(es) and Social Security number; applicant and spouse's employment information, including occupation, employer(s) name(s) and address(es); financial information concerning the applicant and the applicant's spouse including family income, assets, expenses, debts; third party health plan contract information, including health insurance carrier name and address, policy number and time period covered by policy; facility location(s) where treatment is provided; type of treatment provided (i.e., inpatient or outpatient); information about the applicant's military service (e.g., dates of active duty service, dates and branch of service, and character of discharge, combat service dates and locations, military decorations, POW status and military service experience including exposures to toxic substances); information about the applicant's eligibility for VA compensation or pension benefits, and the applicant's enrollment status and enrollment priority group. These records also include, but are not limited to, individual correspondence provided to the HEC by veterans, their family members and veterans' representatives such as Veteran Service Officers (VSO), copies of death certificates; form DD 214, Certificate of Release or Discharge from Active Duty; disability award letters; VA and other pension applications; VA Form 10–10EZ, Application for Health Benefits; VA Form 10–10EZR, Health Benefits Renewal; VA Form 10–10EC, Application for Extended Care Services; and workers compensation forms.

AUTHORITY FOR MAINTENANCE OF THE SYSTEM:

Title 38, United States Code, Sections 501(a), 1705, 1710, 1722, and 5317.

PURPOSE(S):

Information in this system of records is used to establish and maintain applicants' records necessary to support the delivery of health care benefits; establish applicants' eligibility for VA health care benefits; operate an annual enrollment system; provide eligible veterans with an identification card; collect from an applicant's health insurance provider for care of their nonservice-connected conditions; provide educational materials related to VA health care benefits, enrollment and eligibility; respond to veteran and non-veteran inquiries related to VA health care benefits, enrollment and eligibility; and compile management reports.

ROUTINE USES OF RECORDS MAINTAINED IN THE SYSTEM, INCLUDING CATEGORIES OF USERS AND THE PURPOSES OF SUCH USES:

To the extent that records contained in the system include information protected by 45 CFR parts 160 and 164 (i.e., individually identifiable health information), that information cannot be disclosed under a routine use unless there is also specific regulatory authority in 45 CFR parts 160 and 164 permitting disclosure.

1. VA may disclose information from this system of records, as deemed necessary and proper, to named individuals serving as accredited service organization representatives and other individuals named as approved agents or attorneys for a documented purpose and period of time, to aid beneficiaries in the preparation and presentation of their cases during the verification and/or due process procedures and in the presentation and prosecution of claims under laws administered by VA.

2. VA may disclose on its own initiative any information in this system, except the names and home addresses of veterans and their dependents, which is relevant to a suspected or reasonably imminent violation of law, whether civil, criminal or regulatory in nature and whether arising by general or program statute or by regulation, rule or order issued pursuant thereto, to a Federal, State, local, or foreign agency charged with the responsibility of investigating or prosecuting such violation, or charged with enforcing or implementing the statute, regulation, rule or order. On its own initiative, VA may also disclose the names and addresses of veterans and their dependents to a Federal agency charged with the responsibility of investigating or prosecuting civil, criminal or regulatory violations of law, or charged with enforcing or implementing the statute, regulation, rule or order issued pursuant thereto.

3. VA may disclose information from this system of records to private attorneys representing veterans rated incompetent in conjunction with issuance of Certificates of Incompetence, in the course of presenting evidence to a court, magistrate or administrative tribunal, in matters of guardianship, inquests and commitments; and to probation and parole officers in connection with court required duties.

4. VA may disclose information to a VA Federal fiduciary or a guardian ad litem in relation to his or her representation of a veteran only to the extent necessary to fulfill the duties of the VA Federal fiduciary or the guardian ad litem.

5. VA may disclose information to attorneys, insurance companies, employers, third parties liable or potentially liable under health plan contracts, and to courts, boards, or commissions, but only to the extent necessary to aid VA in the preparation, presentation, and prosecution of claims authorized under Federal, State, or local laws, and regulations promulgated thereunder.

6. VA may disclose information in this system of records to the Department of Justice (DoJ), either on VA's initiative or in response to DoJ's request for the information, after either VA or DoJ determines that such information is relevant to DoJ's representation of the United States or any of its components in legal proceedings before a court or adjudicative body, provided that, in each case, the agency also determines prior to disclosure that disclosure of the records to the Department of Justice is a use of the information contained in the records that is compatible with the purpose for which VA collected the records. VA, on its own initiative, may disclose records in this system of records in legal proceedings before a court or administrative body after determining that the disclosure of the records to the court or administrative body is a use of the information contained in the records that is compatible with the purpose for which VA collected the records.

7. VA may disclose information to the National Archives and Records Administration (NARA) and General Services Administration (GSA) in records management inspections conducted under authority of title 44 United States Code.

8. VA may disclose information for the purposes identified below to a third party, except consumer reporting agencies, in connection with any proceeding for the collection of an amount owed to the United States by virtue of a person's participation in any benefit program administered by VA. Information may be disclosed under this routine use only to the extent that it is reasonably necessary for the following purposes: (a) To assist VA in the collection of costs of services provided individuals not entitled to such services, (b) to initiate civil or criminal legal actions for collecting amounts owed to the United States, and (c) for prosecuting individuals who willfully or fraudulently obtained or seek to obtain title 38 medical benefits. This disclosure is consistent with 38 U.S.C. 5701(b)(6).

9. VA may disclose information such as the name and address of a veteran, or other information as is reasonably

necessary to identify such veteran, and any information concerning the veteran's indebtedness to the United States by virtue of the person's participation in a benefits program administered by VA, to a consumer reporting agency for purposes of assisting in the collection of such indebtedness, provided that the provisions of 38 U.S.C. 5701(g)(4) have been met.

10. VA may disclose information to individuals, organizations, private or public agencies, or other entities with whom VA has a contract or agreement to perform such services as VA may deem practicable for the purposes of laws administered by VA in order for the individual or entity with whom VA has an agreement or contract to perform the services of the contract or agreement. This routine use includes disclosures by the individual or entity performing the service for VA to any secondary individual or entity to perform an activity that is necessary for the individual or entity with whom VA has a contract or agreement to provide the service to VA.

11. VA may disclose information from the record of an individual who is covered by a system of records to a member of Congress, or a staff person acting for the member, when the member or staff person requests the record on behalf of and at the written request of the individual.

12. VA may disclose information to other Federal agencies to assist such agencies in preventing and detecting possible fraud or abuse by individuals in their operations and programs.

13. VA may, on its own initiative, disclose any information or records to appropriate agencies, entities, and persons when (1) VA suspects or has confirmed that the integrity or confidentiality of information in the system of records has been compromised; (2) the Department has determined that as a result of the suspected or confirmed compromise, there is a risk of embarrassment or harm to the reputations of the record subjects, harm to economic or property interests, identity theft or fraud, or harm to the security, confidentiality, or integrity of this system or other systems or programs (whether maintained by the Department or another agency or entity) that rely upon the potentially compromised information; and (3) the disclosure is to agencies, entities, or persons whom VA determines are reasonably necessary to assist or carry out the Department's efforts to respond to the suspected or confirmed compromise and prevent, minimize, or remedy such harm. This routine use permits disclosure is required by the Memorandum from the Office of Management and Budget (M–07–16), dated May 22, 2007, of all systems of records of all Federal agencies. This routine use also permits disclosures by the Department to respond to a suspected or confirmed data breach, including the conduct of any risk analysis or provision of credit protection services as provided in 38 U.S.C. 5724, as the terms are defined in 38 U.S.C. 5727.

POLICIES AND PRACTICES FOR STORING, RETRIEVING, ACCESSING, RETAINING AND DISPOSING OF RECORDS IN THE SYSTEM:

STORAGE:

Records are maintained on magnetic tape, magnetic disk, optical disk and paper at the HEC, VIC databases, VA medical centers, the NCMD databases, AAC, contract facilities, and at Federal Record Centers. In most cases, copies of back-up computer files are maintained at off-site locations and/or agencies with whom VA has a contract or agreement to perform such services, as VA may deem practicable.

RETRIEVABILITY:

Records are retrieved by name, and/or Social Security number, ICN, military service number, claim folder number, correspondence tracking number, internal record number (DFN), facility number, or other assigned identifiers of the individuals on whom they are maintained.

ACCESS:

1. In accordance with national and locally established data security procedures, access to enrollment information databases (HEC Legacy system and the Enrollment Database) is controlled by unique entry codes (access and verification codes). The user's verification code is automatically set to be changed every 90 days. User access to data is controlled by role-based access as determined necessary by supervisory and information security staff as well as by management of option menus available to the employee. Determination of such access is based upon the role or position of the employee and functionality necessary to perform the employee's assigned duties.

2. On an annual basis, employees are required to sign a computer access agreement acknowledging their understanding of confidentiality requirements. In addition, all employees receive annual privacy awareness and information security training. Access to electronic records is deactivated when no longer required for official duties. Recurring monitors are in place to ensure compliance with nationally and locally established security measures.

3. User access to the VIC National Card Management Directory database utilizes the national NT network authentication infrastructure. The external VIC vendor utilizes the One-VA VPN secured connection for access to VIC records.

4. Strict control measures are enforced to ensure that access to and disclosure from all records is limited to VA and the contractor's employees whose official duties warrant access to those files.

5. As required by the provisions of the HIPAA Privacy Rule, 45 CFR Parts 160 and 164, access to records by HEC employees is classified under functional category ''Eligibility and Enrollment Staff.''

SAFEGUARDS:

1. Data transmissions between VA health care facilities, the HEC, the AAC, Silver Spring, and Hines databases are accomplished using the Department's secure wide area network. The software programs automatically flag records or events for transmission based upon functional requirements. Server jobs at each facility run continuously to check for data to be transmitted and/or incoming data which needs to be parsed to files on the receiving end. All messages containing data transmissions include header information that is used for validation purposes. The recipients of the messages are controlled and/or assigned to the mail group based on their role or position. Consistency checks in the software are used to validate the transmission, and electronic acknowledgment messages are returned to the sending application. The Department's Office of Cyber Security has oversight responsibility for planning and implementing computer security.

2. Working spaces and record storage areas at HEC, AAC, and the VIC processing locations are secured during all business hours, as well as during non-business hours. All entrance doors require an electronic pass card, for entry when unlocked, and entry doors are locked outside normal business hours. Visitors to the HEC are required to present identification, sign-in at a specified location and are issued a pass card that restricts access to non-sensitive areas. Visitors to the HEC are escorted by staff through restricted areas. At the end of the visit, visitors are required to turn in their badge. The building is equipped with an intrusion alarm system, which is activated during non-business hours. This alarm system is monitored by a private security service vendor. The office space occupied by employees with access to

veteran records is secured with an electronic locking system, which requires a card for entry and exit of that office space. Access to the AAC is generally restricted to AAC staff, VA Central Office employees, custodial personnel, Federal Protective Service and authorized operational personnel through electronic locking devices. All other persons gaining access to the computer rooms are escorted.

3. Access to the VIC contractor secured work areas is also controlled by electronic entry devices, which require a card and manual input for entry and exit of the production space. The VIC contractor's building is also equipped with an intrusion alarm system and a security service vendor monitors the system.

4. Contract employees are required to sign a Business Associates Agreement (BAA) as required by the Health Insurance Portability and Accountability Act of 1996 as acknowledgement of mandatory provisions regarding the use and disclosure of protected health information. Employee and contractor access is deactivated when no longer required for official duties or upon termination of employment. Recurring monitors are in place to ensure compliance with nationally and locally established security measures.

5. Beneficiary's enrollment and eligibility information is transmitted from the Enrollment and Eligibility information system to VA health care facilities over the Department's secure computerized electronic communications system.

6. Only specific key staff have authorized access to the computer room. Programmer access to the information systems is restricted only to staff whose official duties require that level of access.

7. On-line data reside on magnetic media in the HEC and AAC computer rooms that are highly secured. Backup media are stored in the computer room within the same building and only information system staff and designated management staff have access to the computer room. On a weekly basis, backup media are stored in off-site storage by a media storage vendor. The vendor picks up and returns the media in a locked storage container; vendor personnel do not have key access to the locked container. The AAC has established a backup plan for the Enrollment system as part of a required Certification and Accreditation of the information system.

8. Any sensitive information that may be downloaded to personal computers or printed to hard copy format is provided the same level of security as the electronic records. All paper documents and informal notations containing sensitive data are shredded prior to disposal. All magnetic media (primary computer system) and personal computer disks are degaussed prior to disposal or release off-site for repair. The VIC contractor destroys all veteran identification data 30 days after the VIC card has been mailed to the veteran in accordance with contractual requirements.

9. All new HEC employees receive initial information security and privacy training; refresher training is provided to all employees on an annual basis. The HEC's Information Security Officer performs an annual information security audit and periodic reviews to ensure security of the system. This annual audit includes the primary computer information system, the telecommunication system, and local area networks. Additionally, the IRS performs periodic on-site inspections to ensure the appropriate level of security is maintained for Federal tax data.

10. Identification codes and codes used to access Enrollment and Eligibility information systems and records systems, as well as security profiles and possible security violations, are maintained on magnetic media in a secure environment at the Center. For contingency purposes, database back-ups on removable magnetic media are stored off-site by a licensed and bonded media storage vendor.

11. Contractors, subcontractors, and other users of the Enrollment and Eligibility Records systems will adhere to the same safeguards and security requirements to which HEC staff must comply.

RETENTION AND DISPOSAL:

Regardless of the record medium, all records are disposed of in accordance with the records retention standards approved by the Archivist of the United States, National Archives and Records Administration, and published in the VHA Records Control Schedule 10–1.

SYSTEM MANAGER(S) AND ADDRESSES:

Official responsible for policies and procedures: Chief Business Officer (16), VA Central Office, 1722 I St., NW., Washington, DC 20420. Official maintaining the system: Director, Health Eligibility Center, 2957 Clairmont Road, Atlanta, Georgia 30329.

NOTIFICATION PROCEDURE:

Any individual who wishes to determine whether a record is being maintained in this system under his or her name or other personal identifier, or wants to determine the contents of such record, should submit a written request or apply in person to the Health Eligibility Center. All inquiries must reasonably identify the records requested. Inquiries should include the individual's full name, Social Security number, military service number, claim folder number and return address.

RECORD ACCESS PROCEDURES:

Individuals seeking information regarding access to and contesting of Enrollment and Eligibility Records may write to the Director, Health Eligibility Center, 2957 Clairmont Road, Atlanta, Georgia 30329.

CONTESTING RECORD PROCEDURES:

(See Record Access procedures above).

RECORD SOURCE CATEGORIES:

Information in the systems of records may be provided by the applicant; applicant's spouse or other family members or accredited representatives or friends; health insurance carriers; other Federal agencies; ''Patient Medical Records—VA'' (24VA19) system of records; ''Veterans Health Information System and Technology Architecture (VistA) Records—VA'' (79VA19); ''Income Verification Records—VA'' (89VA19); and Veterans Benefits Administration automated record systems, including ''Veterans and Beneficiaries Identification and Records Location Subsystem—VA'' (38VA23) and the ''Compensation, Pension, Education and Rehabilitation Records—VA'' (58VA21/22).

[FR Doc. E8–5956 Filed 3–24–08; 8:45 am]

BILLING CODE 8320–01–P

DEPARTMENT OF VETERANS AFFAIRS

Privacy Act of 1974

AGENCY: Department of Veterans Affairs.

ACTION: Notice of new system of records.

SUMMARY: The Privacy Act of 1974 (5 U.S.C. 552(e)(4)) requires that all agencies publish in the **Federal Register** a notice of the existence and character of their systems of records. Notice is hereby given that the Department of Veterans Affairs (VA) is establishing a new system of records entitled ''Department of Veterans Affairs Personnel Security File System (VAPSFS)''—(145VA005Q3).

DATES: Comments on this new system of records must be received no later than April 24, 2008. If no public comment is received, the new system of records will

become effective 30 days after publication of this Notice.

ADDRESSES: Written comments may be submitted through *http://www.Regulations.gov;* by mail or hand-delivery to the Director, Regulations Management (00REG), Department of Veterans Affairs, 810 Vermont Ave., NW., Room 1068, Washington, DC 20420; or by fax to (202) 273–9026. Copies of comments received will be available for public inspection in the Office of Regulation Policy and Management, Room 1063B, between the hours of 8 a.m. and 4:30 p.m. Monday through Friday (except holidays). Please call (202) 461–4902 (This is not a toll free number) for an appointment. In addition, during the comment period, comments may be viewed online through the Federal Docket Management System (FDMS) at *www.Regulations.gov.*

FOR FURTHER INFORMATION CONTACT: VA Personal Identity Verification (PIV) Program Manager, VA PIV Program Office, Veterans Affairs Central Office, 810 Vermont Avenue, Room B11, Washington, DC 20420, (202) 461–9759 (This is not a toll free number).

SUPPLEMENTARY INFORMATION:

I. Description of the Proposed System of Records

The PIV Applicant may be a current or prospective Federal hire, a Federal employee, contractor, or affiliate who requires routine, long-term logical access to VA information or information systems, and/or physical access to VA facilities to perform their jobs. An affiliate is defined as a non-Federal employee or contract individual. Examples of affiliates include students, researchers, residents, veteran service organization volunteers, temporary help, interns, individuals authorized to perform or use services provided in VA facilities, and individuals formerly in any of these positions. At its discretion, VA may include short-term employees and contractors in the PIV program; therefore, these records are included in the system of records. VA shall make risk-based decisions to determine whether to issue PIV cards and to require prerequisite background checks for short-term employees, contractors, and affiliates. As required by FIPS 201, this system of records addresses VA's collection of individually-identified biographic and biometric information from the PIV Applicant in order to conduct the required PIV background investigation or other national security investigations. VA is promulgating this system of records following OMB Directive M–05–24 guidance in accordance with 5 U.S.C. a(v) in the performance of providing Privacy Act guidance to Federal agencies.

The PIV background investigation matches the PIV Applicant's information against Department of Justice (DOJ), Federal Bureau of Investigation (FBI), Office of Personnel Management (OPM), and VA databases to prevent the hiring of applicants with a disqualifying criminal record, or other disqualifying issues such as severe financial problems, drug or alcohol abuse, or possible affiliations with unlawful entities, that may result in an unfavorable background adjudication. If persons decline to provide information required to conduct a background investigation, VA will not issue them a PIV card. Two forms are used to initiate the background investigation: Questionnaire for Non-Sensitive Positions Standard Form 85 (SF–85) or the Questionnaire for National Security Positions Standard Form 86 (SF–86). This background investigation process entails collecting the PIV Applicant's fingerprints, conducting a Special Agency Check (SAC), and may also include a National Agency Check with Inquires (NACI), which are described below:

SAC: Pursuant to an agreement between VA and OPM or DOJ, a SAC consists of a fingerprint search of criminal history records by the Federal Bureau of Investigation (FBI), Criminal Justice Information Services Division. Each SAC also includes a check of OPM's Suitability/Security Investigation Index (SII). The SAC is also referred to as the Fingerprint only check.

NACI: The basic and minimum investigation required on all new Federal employees consisting of searches of the OPM Security/Suitability Investigations Index (SII), the Defense Clearance and Investigations Index (DCII), the Federal Bureau of Investigation (FBI) Identification Division's name and fingerprint files, and other files or indices when necessary, with written inquiries and searches of records covering specific areas of an individual's background during the past 5 years.

The biographic, biometric, and background information collected as part of this PIV card enrollment process and its results are kept in secure personnel and background investigation files, for which this system of records shall manage.

A separate, yet related system of records addresses the personal data collection for the remainder of the PIV enrollment process—the VA Identity Management System (VAIDMS)—which completes the identity proofing and registration and card issuance operations. The PIV Applicant presents PIV-compliant identity documents, demographic data, employment data, facial image, and fingerprints to create a data record in the VAIDMS. Together these two systems of records will collect and manage the appropriate information to allow a PIV card to be issued to authorized VA employees, contractors, or affiliates, and to effectively manage the PIV card throughout its life cycle operations.

II. Proposed Routine Use Disclosures of Data in the System

1. Disclosure may be made to individuals, organizations, private or public agencies, or other entities or individuals with whom VA has a contract or agreement to perform such services as VA may deem practicable for the purposes of laws administered by VA, in order for the contractor, subcontractor, public or private agency, or other entity or individual with whom VA has an agreement or contract to perform the services of the contract or agreement. This routine use includes disclosures by the individual or entity performing the service for VA to any secondary entity or individual to perform an activity that is necessary for individuals, organizations, private or public agencies, or other entities or individuals with whom VA has a contract or agreement to provide the service to VA.

2. VA may disclose the information listed in 5 U.S.C. 7114(b)(4) to officials of labor organizations recognized under 5 U.S.C. Chapter 71 when relevant and necessary to their duties of exclusive representation concerning personnel policies, practices, and matters affecting working conditions.

3. VA may disclose the information to officials of the Merit Systems Protection Board, or the Office of the Special Counsel, when requested in connection with appeals, special studies of the civil service and other merit systems, review of rules and regulations, investigation of alleged or possible prohibited personnel practices, and such other functions, promulgated in 5 U.S.C. 1205 and 1206, or as may be authorized by law.

4. VA may disclose the information to the Equal Employment Opportunity Commission when requested in connection with investigations of alleged or possible discriminatory practices, examination of Federal affirmative employment programs, or for other functions of the Commission as authorized by law or regulation.

5. VA may disclose the information to the Federal Labor Relations Authority (including its General Counsel)

information related to the establishment of jurisdiction, the investigation and resolution of allegations of unfair labor practices, or information in connection with the resolution of exceptions to arbitration awards when a question of material fact is raised; to disclose information in matters properly before the Federal Services Impasses Panel, and to investigate representation petitions and conduct or supervise representation elections.

6. VA may disclose the information to a Member of Congress or to a Congressional staff member in response to an inquiry of the Congressional office made at the written request of the constituent about whom the record is maintained.

7. VA may disclose the information to the National Archives and Records Administration or to the General Services Administration for records management inspections conducted under 44 U.S.C. 2904 and 2906.

8. VA may disclose information in this system of records to DOJ and OPM, either on VA's initiative or in response to DOJ's and OPM's request for the information, after either VA, DOJ, or OPM determines that such information is relevant to OPM's or DOJ's representation of the United States or any of its components in legal proceedings before a court or adjudicative body, provided that, in each case, the agency also determines prior to disclosure that disclosure of the records to DOJ or OPM is a use of the information contained in the records that is compatible with the purpose for which VA collected the records. VA, on its own initiative, may disclose records in this system of records in legal proceedings before a court or administrative body after determining that the disclosure of the records to the court or administrative body is a use of the information contained in the records that is compatible with the purpose for which VA collected the records.

9. VA may disclose the information, except as noted on Forms SF 85, 85–P, and 86, when a record on its face, or in conjunction with other records, indicates a violation or potential violation of law, whether civil, criminal, or regulatory in nature, and whether arising by general statute or particular program statute, or by regulation, rule, or order issued pursuant thereto, disclosure may be made to the appropriate public authority, whether Federal, foreign, State, local, or tribal, or otherwise, responsible for enforcing, investigating or prosecuting such violation or charged with enforcing or implementing the statute, or rule, regulation, or order issued pursuant thereto, if the information disclosed is relevant to any enforcement, regulatory, investigative or prosecutorial responsibility of the receiving entity.

10. VA may disclose the information to a Federal, State, local, foreign, or tribal or other public authority the fact that this system of records contains information relevant to the retention of an employee, the retention of a security clearance, the letting of a contract, or the issuance or retention of a license, grant, or other benefit. The other agency or licensing organization may then make a request supported by the written consent of the individual for the entire record if it so chooses. No disclosure will be made unless the information has been determined to be sufficiently reliable to support a referral to another office within the agency or to another Federal agency for criminal, civil, administrative personnel or regulatory action.

11. VA may disclose on its own initiative any information in this system, except the names and home addresses of veterans and their dependents, which is relevant to a suspected or reasonably imminent violation of law, whether civil, criminal or regulatory in nature and whether arising by general or program statute or by regulation, rule or order issued pursuant thereto, to a Federal, State, local, tribal, or foreign agency charged with the responsibility of investigating or prosecuting such violation, or charged with enforcing or implementing the statute, regulation, rule or order. On its own initiative, VA may also disclose the names and addresses of veterans and their dependents to a Federal agency charged with the responsibility of investigating or prosecuting civil, criminal or regulatory violations of law, or charged with enforcing or implementing the statute, regulation, rule or order issued pursuant thereto.

III. Compatibility of the Proposed Routine Uses

Release of information from these records pursuant to routine uses will be made only in accordance with the provisions of the Privacy Act of 1974. The Privacy Act of 1974 permits agencies to disclose information about individuals without their consent for a routine use when the information will be used for a purpose that is compatible with the purpose for which the information was collected. In the routine use disclosures proposed for this new VA system of records, VA will disclose individually-identified information for the following purposes: In connection with VA's administrative notice and rulemaking process, to contractors to perform a function associated with that process, for law-enforcement activities, and in administrative and judicial proceedings. The VA has determined that the disclosure of information for the above purposes is a proper and necessary use of the information collected by the VAPSFS system, and is compatible with the purpose for which VA collected the information.

The notice of intent to publish an advance copy of the system notice has been sent to the appropriate Congressional committees and to the Director OMB as required by 5 U.S.C. 552a(r) (Privacy Act), as amended, and guidelines issued by OMB (65 FR 77677), December 12, 2000.

Approved: March 11, 2008.

Gordon H. Mansfield,

Deputy Secretary of Veterans Affairs.

145VA005Q3

SYSTEM NAME:

Department of Veterans Affairs Personnel Security File System (VAPSFS).

SYSTEM LOCATION:

Primary location: Paper records are kept at the individual VA field site locations, within the local Department of Human Resources offices, as well as the Security and Investigations Center (SIC), at Little Rock, AR. Secondary locations: Electronic records are kept at the VA Data Centers at Falling Waters, WV, Hines, IL, Austin Automation Center, Austin, TX, and at the SIC, Little Rock, AR.

CATEGORIES OF INDIVIDUALS COVERED BY THE SYSTEM:

Individuals who require routine, long-term access to VA federal facilities, and/or information technology systems to perform their jobs. VA employees, contractors, and affiliates are covered by the system of records. An affiliate is defined as a non-Federal employee or contract individual. Examples of affiliates include students, researchers, residents, veteran service organization volunteers, temporary help, interns, individuals authorized to perform or use services provided in VA facilities, and individuals formerly in any of these positions. At their discretion, VA may include short-term employees and contractors in the PIV program and, therefore, these records are included in the system of records. VA shall make risk-based decisions to determine whether to issue PIV cards and to require prerequisite background checks for short-term employees, contractors, and affiliates. The system also includes

individuals accused of security violations or found in violation by VA security officials.

CATEGORIES OF RECORDS IN THE SYSTEM:

Information is obtained from a variety of sources including the employee, contractor, or applicant via use of the SF–85, SF–85P, SF–86, and personal interviews; employers' and former employers' records; DOJ, FBI, OPM, DOD criminal history records and other databases; background investigation Case Number (CN), Social Security Number (SSN), fingerprints, financial institutions and credit reports; medical records and health care providers; educational institutions; interviews of witnesses such as neighbors, friends, co-workers, business associates, teachers, landlords, or family members; tax records; and other public records. VA security violation information is obtained from a variety of sources, such as guard reports, security inspections, witnesses, supervisor's reports, and audit reports.

AUTHORITY FOR MAINTENANCE OF THE SYSTEM:

The U.S. government is authorized to ask for this information under Executive Orders 9397, 10450, 10865, 12333, and 12356; sections 3301 and 9101 of title 5, U.S. Code; sections 2165 and 2201 of title 42, U.S. Code; sections 781 to 887 of title 50, U.S. Code; parts 5, 732, and 736 of title 5, Code of Federal Regulations; and Homeland Security Presidential Directive 12.

PURPOSE:

The records in this system of records are used to document background and security investigation information which support decisions as to the eligibility and fitness for service of VA PIV applicants for VA employment and contract positions, and may include employees, contractors, and affiliates, to the extent their duties require access to VA federal facilities and/or information systems. They may also be used to document security violations and supervisory actions taken in response to those violations.

ROUTINE USES OF RECORDS MAINTAINED IN THE SYSTEM, INCLUDING CATEGORIES OF USERS AND THE PURPOSES OF SUCH USES:

1. Disclosure may be made to individuals, organizations, private or public agencies, or other entities or individuals with whom VA has a contract or agreement to perform such services as VA may deem practicable for the purposes of laws administered by VA, in order for the contractor, subcontractor, public or private agency, or other entity or individual with whom VA has an agreement or contract to perform the services of the contract or agreement. This routine use includes disclosures by the individual or entity performing the service for VA to any secondary entity or individual to perform an activity that is necessary for individuals, organizations, private or public agencies, or other entities or individuals with whom VA has a contract or agreement to provide the service to VA.

2. VA may disclose the information listed in 5 U.S.C. 7114(b)(4) to officials of labor organizations recognized under 5 U.S.C. Chapter 71 when relevant and necessary to their duties of exclusive representation concerning personnel policies, practices, and matters affecting working conditions.

3. VA may disclose the information to officials of the Merit Systems Protection Board, or the Office of the Special Counsel, when requested in connection with appeals, special studies of the civil service and other merit systems, review of rules and regulations, investigation of alleged or possible prohibited personnel practices, and such other functions, promulgated in 5 U.S.C. 1205 and 1206, or as may be authorized by law.

4. VA may disclose the information to the Equal Employment Opportunity Commission when requested in connection with investigations of alleged or possible discriminatory practices, examination of Federal affirmative employment programs, or for other functions of the Commission as authorized by law or regulation.

5. VA may disclose to the Federal Labor Relations Authority (including its General Counsel) information related to the establishment of jurisdiction, the investigation and resolution of allegations of unfair labor practices, or information in connection with the resolution of exceptions to arbitration awards when a question of material fact is raised; to disclose information in matters properly before the Federal Services Impasses Panel, and to investigate representation petitions and conduct or supervise representation elections.

6. VA may disclose the information to a Member of Congress or to a Congressional staff member in response to an inquiry of the Congressional office made at the written request of the constituent about whom the record is maintained.

7. VA may disclose the information to the National Archives and Records Administration or to the General Services Administration for records management inspections conducted under 44 U.S.C. 2904 and 2906.

8. VA may disclose information in this system of records to the Department of Justice (DOJ) and OPM, either on VA's initiative or in response to DOJ's and OPM's request for the information, after either VA, DOJ, or OPM determines that such information is relevant to OPM's or DOJ's representation of the United States or any of its components in legal proceedings before a court or adjudicative body, provided that, in each case, the agency also determines prior to disclosure that disclosure of the records to the DOJ or OPM is a use of the information contained in the records that is compatible with the purpose for which VA collected the records. VA, on its own initiative, may disclose records in this system of records in legal proceedings before a court or administrative body after determining that the disclosure of the records to the court or administrative body is a use of the information contained in the records that is compatible with the purpose for which VA collected the records.

9. VA may disclose the information, except as noted on Forms SF 85, 85–P, and 86, when a record on its face, or in conjunction with other records, indicates a violation or potential violation of law, whether civil, criminal, or regulatory in nature, and whether arising by general statute or particular program statute, or by regulation, rule, or order issued pursuant thereto, disclosure may be made to the appropriate public authority, whether Federal, foreign, State, local, or tribal, or otherwise, responsible for enforcing, investigating or prosecuting such violation or charged with enforcing or implementing the statute, or rule, regulation, or order issued pursuant thereto, if the information disclosed is relevant to any enforcement, regulatory, investigative or prosecutorial responsibility of the receiving entity.

10. VA may disclose the information to a Federal, State, local, foreign, or tribal or other public authority the fact that this system of records contains information relevant to the retention of an employee, the retention of a security clearance, the letting of a contract, or the issuance or retention of a license, grant, or other benefit. The other agency or licensing organization may then make a request supported by the written consent of the individual for the entire record if it so chooses. No disclosure will be made unless the information has been determined to be sufficiently reliable to support a referral to another Federal agency for criminal, civil, administrative personnel or regulatory action.

11. VA may disclose on its own initiative any information in this system, except the names and home addresses of veterans and their

dependents, which is relevant to a suspected or reasonably imminent violation of law, whether civil, criminal or regulatory in nature and whether arising by general or program statute or by regulation, rule or order issued pursuant thereto, to a Federal, State, local, tribal, or foreign agency charged with the responsibility of investigating or prosecuting such violation, or charged with enforcing or implementing the statute, regulation, rule or order. On its own initiative, VA may also disclose the names and addresses of veterans and their dependents to a Federal agency charged with the responsibility of investigating or prosecuting civil, criminal or regulatory violations of law, or charged with enforcing or implementing the statute, regulation, rule or order issued pursuant thereto.

POLICIES AND PRACTICES FOR STORING, RETRIEVING, ACCESSING, RETAINING, AND DISPOSING OF RECORDS IN THE SYSTEM:

STORAGE:

Records are stored on paper and electronically in secure VA locations.

RETRIEVABILITY:

Background investigation records are retrieved by case number (CN), name, Social Security Number (SSN), or fingerprint.

SAFEGUARDS:

For paper records: Comprehensive paper records are kept in locked metal file cabinets in locked rooms at the field site Department of Human Resources offices, and the SIC, Little Rock, AR. The paper records are maintained in controlled facilities where physical entry is restricted by the use of locks, guards, and administrative procedures. Access to the records is limited to those employees who have a need for them in the performance of their official duties. In addition, all personnel whose official duties require access to the information have undergone appropriate background investigations and are trained and certified in the proper safeguarding and use of the information.

For electronic records: Electronic records pertaining to any background investigation data collected during the PIV enrollment process are kept in the PIV Identity Management System maintained at VA Data Centers in Falling Waters, WV; Hines, IL; Austin Automation Data Center, Austin, TX; and at the SIC, Little Rock, AR. Electronic records are maintained in a secure, password protected electronic system that utilizes security hardware and software to include: Encryption, multiple firewalls, active intruder detection, and role-based access controls.

Access to the records is restricted to those with a specific role in the PIV administrative process that requires access to background investigation forms to perform their duties, and who have been given authorization and password to access that part of the system. An audit trail is maintained and reviewed periodically to identify attempts to access, and actual unauthorized access events. Persons given roles in the PIV process have undergone appropriate background investigations and must complete training and be certified in their specific roles to ensure they are knowledgeable about how to protect sensitive and individually-identified information.

RETENTION AND DISPOSAL:

These records are retained and disposed of in accordance with General Records Schedule 18, item 22, approved by the National Archives and Records Administration (NARA). Records are destroyed upon notification of death or not later than five years after separation or transfer of employee, whichever is applicable.

SYSTEM MANAGER AND ADDRESS:

VA PIV Program Manager, Office of Information and Technology (005Q3), Department of Veterans Affairs, 810 Vermont Ave., NW., Room B–11, Washington, DC 20420; telephone (202) 461–9759 (This is not a toll free number).

NOTIFICATION PROCEDURES:

An individual can determine if this system contains a record pertaining to him/her by sending a signed written request to the Systems Manager. When requesting notification of or access to records covered by this Notice, an individual should provide his/her full name, date of birth, agency name, and work location. An individual requesting notification of records in person must provide identity documents sufficient to satisfy the custodian of the records that the requester is entitled to access, such as a government-issued photo ID. Individuals requesting notification via mail or telephone must furnish, at minimum, name, date of birth, social security number, and home address in order to establish identity.

RECORD ACCESS PROCEDURE:

Same as notification procedures.

CONTESTING RECORD PROCEDURE:

Same as notification procedures. Requesters should also reasonably identify the record, specify the information they are contesting, state the corrective action sought and the reasons for the correction along with supporting justification showing why the record is not accurate, timely, relevant, or complete.

RECORD SOURCE CATEGORIES:

Information is obtained from a variety of sources including the employee, contractor, or affiliate applicant via use of the SF–85, SF–85P, or SF–86 and personal interviews; employer's and former employers' records; FBI criminal history records and other databases; financial institutions and credit reports; medical records and health care providers; educational institutions; interviews of witnesses such as neighbors, friends, co-workers, business associates, teachers, landlords, or family members; tax records; and other public records. VA security violation information is obtained from a variety of sources, such as guard reports, security inspections, witnesses, supervisor's reports, and audit reports.

EXEMPTIONS CLAIMED FOR THE SYSTEM:

Upon publication of a final rule in the **Federal Register**, this system of records will be exempt in accordance with 5 U.S.C. 552a(k)(5). Information will be withheld to the extent it identifies witnesses promised confidentiality as a condition of providing information during the course of the background investigation.

[FR Doc. E8–5969 Filed 3–24–08; 8:45 am]

BILLING CODE 8320–01–P

DEPARTMENT OF VETERANS AFFAIRS

Privacy Act of 1974

AGENCY: Department of Veterans Affairs.

ACTION: Notice of amendment to system of records.

SUMMARY: As required by the Privacy Act of 1974 (5 U.S.C. 552(e)(4)), notice is hereby given that the Department of Veterans Affairs (VA) is amending the system of records currently entitled, ''Department of Veterans Affairs Federal Docket Management System (VAFDMS)—(140VA00REG)'' as set forth in the **Federal Register** on February 9, 2007. VA is amending the system by revising the routine uses of records maintained in the system, including categories of users and the purpose of such uses. VA is republishing the system notice in its entirety.

DATES: Comments on the amendment of this system of records must be received no later than April 24, 2008. If no public

comment is received, the new system will become effective April 24, 2008.

ADDRESSES: Written comments may be submitted through *http://www.Regulations.gov;* by mail or hand-delivery to the Director, Regulations Management (00REG), Department of Veterans Affairs, 810 Vermont Avenue, NW., Room 1068, Washington, DC, 20420; or by fax to (202) 273–9026. Comments should indicate that they are submitted in response to the amendment of ''Department of Veterans Affairs Federal Docket Management System (VAFDMS)—(140VA00REG).'' Copies of comments received will be available for public inspection in the Office of Regulation Policy and Management, Room 1063B, between the hours of 8 a.m. and 4:30 p.m., Monday through Friday (except holidays). Please call (202) 461–4902 for an appointment. In addition, during the comment period, comments may be viewed online through the Federal Docket Management System at *http://www.Regulations.gov.*

FOR FURTHER INFORMATION CONTACT: William F. Russo, Privacy Officer, or Janet Coleman, Office of Regulation Policy and Management (00REG), Department of Veterans Affairs, 810 Vermont Avenue, NW., Washington, DC 20420, (202) 461–4902.

SUPPLEMENTARY INFORMATION: A Notice of Establishment of New System of Records was published in the **Federal Register** on February 9, 2007 (72 FR 6315).

I. Description of the System of Records

The Department of Veterans Affairs Federal Docket Management System (VAFDMS) permits the Department of Veterans Affairs (VA) to identify individuals, who have submitted comments in response to VA rulemaking documents or notices so that communications or other actions, as appropriate and necessary, can be effected, such as to seek clarification of the comment, to directly respond to a comment, and for other activities associated with the rulemaking or notice process. Identification is possible only if the individual voluntarily provides identifying information when submitting a comment. If such information is not furnished, the submitted comments and/or supporting documentation cannot be linked to an individual.

VAFDMS permits members of the public to search the public comments received by name of the individual submitting the comment. Unless the individual submits the comment anonymously, a name search will result in the comment being displayed for view. Comments may be searched by other means whether submitted anonymously or by an identified individual. If the comment is submitted electronically using VAFDMS, the viewed comment will not include the name of the submitter or any other identifying information about the individual except that, which the submitter has opted to include as part of his or her general comments. If a comment is submitted by an individual on his or her own behalf, in writing, that has been scanned and uploaded into VAFDMS, unless the individual submits the comment anonymously, the submitter's name will be on the comment, but other personally identifying information will be redacted before it is scanned and uploaded. Comments submitted on behalf of organizations in writing that have to be scanned and uploaded into VAFDMS, will not be redacted.

II. Proposed Amendments to Routine Use Disclosures of Data in the System

VA is rewriting existing routine uses in the System using plain language. The use of plain language in these routine uses does not, and is not intended to, change the disclosures authorized under these routine uses. VA is amending, deleting, rewriting and reorganizing the order of the routine uses in this system of records, as well as adding new routine uses. Accordingly, the following changes are made to the current routine uses and are incorporated into the amended system of records notice:

Current routine use number 1 is being renumbered as routine use number 4, and is amended to more accurately reflect VA's authorization to disclose individually-identifiable information to contractors or other entities that will provide services to VA for which the recipient needs that information in order to perform the services.

VA is not amending current routine use number 2, but VA is renumbering it as routine use number 8.

VA is renumbering current routine use number 3 as routine use number 5, and amending it, with minor word changes, to more accurately reflect the conditions under which VA, on its own initiative, may disclose information from this system of records for law enforcement purposes.

Current routine use number 4 is being renumbered as new routine use number 3, and is being amended, with minor word changes, to more clearly state when VA may disclose information in legal proceedings, and when VA may disclose information to the Department of Justice. In determining whether to disclose records under this routine use, VA will comply with the guidance promulgated by the Office of Management and Budget (OMB) in a May 24, 1985, memorandum entitled ''Privacy Act Guidance—Update'' currently posted at *http://frwebgate.access.gpo.gov/cgi-bin/leaving.cgi?from=leavingFR.html&log=linklog&to=http://www.whitehouse.gov/omb/inforeg/guidance1985.pdf.*

VA is adding new routine use number 1 authorizing when VA may disclose the record of an individual to a Member of Congress, or a staff person acting for the Member.

New routine use number 2 is being added to authorize disclosure to the National Archives and Records Administration in records management inspections conducted under authority of Title 44 U.S.C.

VA is adding new routine use number 6 authorizing when VA may disclose to other Federal agencies in assisting such agencies in preventing and detecting possible fraud or abuse by individuals in their operations and programs.

Finally, VA is adding new routine use number 7 that authorizes the circumstances, and to whom, VA may disclose records in order to respond to, and minimize possible harm to, individuals as a result of a data breach. This routine use is promulgated in order to meet VA's statutory duties under 38 U.S.C. 5724 and The Privacy Act, 5 U.S.C. 552a, as amended.

III. Compatibility of the Proposed Routine Uses

Release of information from these records, pursuant to routine uses, will be made only in accordance with the provisions of the Privacy Act of 1974. The Privacy Act of 1974 permits agencies to disclose information about individuals, without their consent, for a routine use when the information will be used for a purpose that is compatible with the purpose for which the information was collected. VA has determined that the disclosure of information for the above purposes in the proposed amended to routine uses is a proper and necessary use of the information collected by the VAFDMS system, and is compatible with the purpose for which VA collected the information.

The notice of intent to publish an advance copy of the system notice has been sent to the appropriate Congressional Committees and to the Director of the Office of Management and Budget (OMB), as required by 5 U.S.C. 552a(r) (Privacy Act), as amended, and guidelines issued by OMB (65 FR 77677), December 12, 2000.

Approved: March 11, 2008.

Gordon H. Mansfield,

Deputy Secretary of Veterans Affairs.

140VA00REG

SYSTEM NAME:

Department of Veterans Affairs Federal Docket Management System (VAFDMS)

SYSTEM LOCATION:

Primary location: Electronic records are kept at the U.S. Environmental Protection Agency, Research Triangle Park, NC 27711–0001. Secondary location: Paper records are kept at Department of Veterans Affairs, 810 Vermont Avenue, NW., Washington, DC 20420.

CATEGORIES OF INDIVIDUALS COVERED BY THE SYSTEM:

Individuals who voluntarily provide personal contact information when submitting a public comment and/or supporting materials in response to a Department of Veterans Affairs rulemaking document or notice.

CATEGORIES OF RECORDS IN THE SYSTEM:

Full name, postal address, e-mail address, phone and fax numbers of the individual submitting comments, the name of the organization or individual that the individual represents (if any), and the comments, as well as other supporting documentation, furnished by the individual. Comments may include personal information about the commenter.

AUTHORITY FOR MAINTENANCE OF THE SYSTEM:

44 U.S.C. 3501, Note; Pub. L. 107–347, sec. 206(d); Note; 5 U.S.C. 301, and 553.

PURPOSE:

To permit the Department of Veterans Affairs (VA) to identify individuals, who have submitted comments in response to VA rulemaking documents or notices, so that communications or other actions, as appropriate and necessary, can be effected, such as to seek clarification of the comment, to directly respond to a comment, and for other activities associated with the rulemaking or notice process.

ROUTINE USES OF RECORDS MAINTAINED IN THE SYSTEM, INCLUDING CATEGORIES OF USERS AND THE PURPOSES OF SUCH USES:

1. The record of an individual who is covered by a system of records may be disclosed to a Member of Congress, or a staff person acting for the Member, when the Member or staff person requests the record on behalf of and at the written request of the individual.

2. Disclosure may be made to the National Archives and Records Administration in records management inspections conducted under authority of Title 44 U.S.C.

3. VA may disclose information from this system of records to the Department of Justice (DoJ), either on VA's initiative or in response to DoJ's request for the information, after either VA or DoJ determines that such information is relevant to DoJ's representation of the United States or any of its components in legal proceedings before a court or adjudicative body, provided that, in each case, the agency also determines prior to disclosure that release of the records to the DoJ is a use of the information contained in the records that is compatible with the purpose for which VA collected the records. VA, on its own initiative, may disclose records in this system of records in legal proceedings before a court or administrative body after determining that the disclosure of the records to the court or administrative body is a use of the information contained in the records that is compatible with the purpose for which VA collected the records.

4. Disclosure of relevant information may be made to individuals, organizations, private or public agencies, or other entities with whom VA has a contract or agreement or where there is a subcontract to perform such services as VA may deem practicable for the purposes of laws administered by VA, in order for the contractor or subcontractor to perform the services of the contract or agreement.

5. VA may disclose on its own initiative any information in the system, except the names and home addresses of veterans and their dependents, that is relevant to a suspected or reasonably imminent violation of the law whether civil, criminal, or regulatory in nature and whether arising by general or program statute or by regulation, rule, or order issued pursuant thereto, to a Federal, state, local, tribal, or foreign agency charged with the responsibility of investigating or prosecuting such violation, or charged with enforcing or implementing the statute, regulation, rule, or order. VA may also disclose on its own initiative the names and addresses of veterans and their dependents to a Federal agency charged with the responsibility of investigating or prosecuting civil, criminal, or regulatory violations of law, or charged with enforcing or implementing the statute, regulation, or order issued pursuant thereto.

6. Disclosure to other Federal agencies may be made to assist such agencies in preventing and detecting possible fraud or abuse by individuals in their operations and programs.

7. VA may, on its own initiative, disclose any information or records to appropriate agencies, entities, and persons when (1) VA suspects or has confirmed that the integrity or confidentiality of information in the system of records has been compromised; (2) the Department has determined that as a result of the suspected or confirmed compromise, there is a risk of embarrassment or harm to the reputations of the record subjects, harm to economic or property interests, identity theft or fraud, or harm to the security, confidentiality, or integrity of this system or other systems or programs (whether maintained by the Department or another agency or entity) that rely upon the potentially compromised information, and (3) the disclosure is to agencies, entities, or persons whom VA determines are reasonably necessary to assist or carry out the Department's efforts to respond to the suspected or confirmed compromise and prevent, minimize, or remedy such harm. This routine use permits disclosures by the Department to respond to a suspected or confirmed data breach, including the conduct of any risk analysis or provision of credit protection services as provided in 38 U.S.C. 5724, as the terms are defined in 38 U.S.C. 5727.

8. VA may disclose information contained in this System of Records, as necessary, to comply with the requirements of the Administrative Procedure Act (APA) that comments are available for public review if submitted in response to VA's solicitation of public comments as part of the Agency's notice and rulemaking activities under the APA. However, VA will not release individually-identifiable personal information, such as an individual's address or home telephone number, under this routine-use, except where VA determines that publication without redaction was intended by the submitter.

POLICIES AND PRACTICES FOR STORING, RETRIEVING, ACCESSING, RETAINING, AND DISPOSING OF RECORDS IN THE SYSTEM:

(A) STORAGE:

Records are maintained on electronic storage media and paper.

(B) RETRIEVABILITY:

Records are retrieved by various data elements and key word searches, among which are by: Name, Agency, Docket Type, Docket Sub-Type, Agency Docket ID, Docket Title, Docket Category, Document Type, CFR Part, Date

Comment Received, and **Federal Register** Published Date.

(C) SAFEGUARDS:

Electronic records are maintained in a secure, password protected, electronic system that utilizes security hardware and software to include: Multiple firewalls, active intruder detection, and role-based access controls. Paper records are maintained in a controlled facility, where physical entry is restricted by the use of locks, guards, and/or administrative procedures. Access to records is limited to those officials who require the records to perform their official duties consistent with the purpose for which the information was collected. All personnel whose official duties require access to the information are trained in the proper safeguarding and use of the information.

(D) RETENTION AND DISPOSAL:

Records will be maintained and disposed of, in accordance with records disposition authority, approved by the Archivist of the United States.

SYSTEM MANAGER(S) AND ADDRESSES:

William F. Russo, Privacy Officer, Office of Regulation Policy and Management (00REG), Department of Veterans Affairs, 810 Vermont Ave., NW., Washington, DC 20420; telephone (202) 461–4902.

NOTIFICATION PROCEDURES:

Individuals seeking to determine whether this System of Records contains information about themselves should address written inquiries to the Office of Regulation Policy and Management (00REG), Department of Veterans Affairs, 810 Vermont Ave., NW., Washington, DC 20420. Requests should contain the full name, address and telephone number of the individual making the inquiry.

RECORD ACCESS PROCEDURE:

Individuals seeking to access or contest the contents of records, about themselves, contained in this System of Records should address a written request, including full name, address and telephone number to the Office of Regulation Policy and Management (00REG), Department of Veterans Affairs, 810 Vermont Ave., NW., Washington, DC 20420.

CONTESTING RECORD PROCEDURE:

(See Record Access Procedure above.)

RECORD SOURCE CATEGORIES:

Individual.

EXEMPTIONS CLAIMED FOR THE SYSTEM:

There are no exemptions being claimed for this system.

[FR Doc. E8–6041 Filed 3–24–08; 8:45 am]

BILLING CODE 8320–01–P

Reader Aids

Federal Register

Vol. 73, No. 58

Tuesday, March 25, 2008

CUSTOMER SERVICE AND INFORMATION

Federal Register/Code of Federal Regulations	
General Information, indexes and other finding aids	**202–741–6000**
Laws	**741–6000**
Presidential Documents	
Executive orders and proclamations	**741–6000**
The United States Government Manual	**741–6000**
Other Services	
Electronic and on-line services (voice)	**741–6020**
Privacy Act Compilation	**741–6064**
Public Laws Update Service (numbers, dates, etc.)	**741–6043**
TTY for the deaf-and-hard-of-hearing	**741–6086**

ELECTRONIC RESEARCH

World Wide Web

Full text of the daily Federal Register, CFR and other publications is located at: **http://www.gpoaccess.gov/nara/index.html**

Federal Register information and research tools, including Public Inspection List, indexes, and links to GPO Access are located at: **http://www.archives.gov/federal__register**

E-mail

FEDREGTOC-L (Federal Register Table of Contents LISTSERV) is an open e-mail service that provides subscribers with a digital form of the Federal Register Table of Contents. The digital form of the Federal Register Table of Contents includes HTML and PDF links to the full text of each document.

To join or leave, go to **http://listserv.access.gpo.gov** and select *Online mailing list archives, FEDREGTOC-L, Join or leave the list (or change settings);* then follow the instructions.

PENS (Public Law Electronic Notification Service) is an e-mail service that notifies subscribers of recently enacted laws.

To subscribe, go to **http://listserv.gsa.gov/archives/publaws-l.html** and select *Join or leave the list (or change settings);* then follow the instructions.

FEDREGTOC-L and **PENS** are mailing lists only. We cannot respond to specific inquiries.

Reference questions. Send questions and comments about the Federal Register system to: **fedreg.info@nara.gov**

The Federal Register staff cannot interpret specific documents or regulations.

FEDERAL REGISTER PAGES AND DATE, MARCH

11305–11516 3
11517–11810 4
11811–12006 5
12007–12258 6
12259–12626 7
12627–12868 10
12869–13070 11
13071–13428 12
13429–13728 13
13729–14152 14
14153–14370 17
14371–14658 18
14659–14916 19
14917–15050 20
15051–15386 21
15387–15632 24
15633–15860 25

CFR PARTS AFFECTED DURING MARCH

At the end of each month, the Office of the Federal Register publishes separately a List of CFR Sections Affected (LSA), which lists parts and sections affected by documents published since the revision date of each title.

3 CFR

Proclamations:
8221 11513
8222 11515
8223 11999
8224 12001
8225 13429
8226 14915
8227 15633

Executive Orders:
12333 (See 13462).....11805
12863 (Revoked by 13462) 11805
12958 (See 13462).....11805
12968 (See 13462).....11805
13288 (See Notice of March 4, 2008).....12005
13391 (See Notice of March 4, 2008).....12005
13462.....11805

Administrative Orders:
Notices:
Notice of March 4, 2008 12005
Notice of March 12, 2008 13727
Presidential Determinations:
No. 2008-13 of February 28, 2008 12259
No. 2008-14 of March 7, 2008 13431

4 CFR

Proposed Rules:
21 15098

5 CFR

2634 15387
2635 15387
2641 12007

Proposed Rules:
1601 12665

6 CFR

27 15051

7 CFR

51 15052
56 11517
70 11517
246.....11305, 14153
457.....11314, 11318
786 11519
905 14371
916 14372
917 14372
930 11323
983 14917
984 11328
1000 14153
1005 14153
1006 14153
1007 14153
1212 11470
1216 14919
3565 11811
3570 14171

Proposed Rules:
205 13795
927 14400
955 14400
956 13798
966 14400
981 11360
984 14400
1212 11470
1240 11470

8 CFR

103 15635
204 15635
213a 15635
214 15389
299 15635
322 15635

9 CFR

Proposed Rules:
2 14403
3 14403

10 CFR

Ch. I 14376
2 12627
72 13071
490 13729

Proposed Rules:
20 14946
30 14946
40 14946
50.....13157, 14946
51 14946
70 14946
72 14946
430.....13465, 13620

12 CFR

16 12009
32 14922
797 11340

Proposed Rules:
327 15459

13 CFR

121 12869

Proposed Rules:
120 15468

14 CFR

23 12542
25 12542
27 12542
29 12542

39 .....11346, 11347, 11527, 11529, 11531, 11534, 11536, 11538, 11540, 11542, 11544, 11545, 11812, 13071, 13075, 13076, 13078, 13081, 13084, 13087, 13093, 13096, 13098, 13100, 13103, 13106, 13109, 13111, 13113, 13115, 13117, 13120, 13433, 13436, 13438, 14377, 14378, 14659, 14661, 14665, 14666, 14668, 14670, 14673, 15395, 15397, 15399
61.....14676
71 .....12010, 13122, 14677, 14679, 14680, 14924, 14925, 15049, 15058, 15060, 15061
91 .....12542, 14676, 15280
95.....14381
97 .....11551, 12631, 14681, 14686
121.....12542
125.....12542
129.....12542
135 .....12542, 14676, 15280
Proposed Rules:
39 .....11363, 11364, 11366, 11369, 11841, 12032, 12034, 12299, 12301, 12303, 12901, 12905, 12907, 12910, 12912, 13157, 13480, 13483, 13486, 13488, 13490, 13492, 13494, 13496, 13498, 13501, 13503, 13504, 13507, 13509, 13511, 13513, 13515, 13800, 13803, 13806, 14189, 14191, 14403, 14405, 14731, 14733, 15678, 15681, 15682
60.....11995
71 .....13159, 13809, 13811, 14408, 14949, 15685
234.....11843
253.....11843
259.....11843
399.....11843

15 CFR

738.....14687
Proposed Rules:
296.....12305

16 CFR

453.....13740
1610.....15636
Proposed Rules:
Ch. I.....11844
260.....11371
306.....12916
1634.....11702

17 CFR

Proposed Rules:
230.....13404
239.....13404, 14618
240.....13404, 15376
248.....13692
249.....13404
270.....14618
274.....14618
275.....13958
279.....13958

18 CFR

141.....14173
385.....14173
Proposed Rules:
35.....12576

19 CFR

4.....12634
122.....12261

20 CFR

404.....11349, 14570
416.....11349
Proposed Rules:
295.....12037
404.....12923, 14409
416.....12923

21 CFR

111.....13123
510.....14384
522 .....12634, 14177, 14384, 14926
526.....12262
558.....14385, 15661
600.....12262
1308.....14177
Proposed Rules:
516.....14411

22 CFR

41.....14926
42.....14926
126.....15409
310.....14687

23 CFR

661.....15661
771.....13368
774.....13368
Proposed Rules:
630.....12038

24 CFR

17.....13722
180.....13722
Proposed Rules:
203.....14030
3500.....14030

25 CFR

224.....12808

26 CFR

1 .....12263, 12265, 12268, 13124, 14386, 14687, 14934, 15063, 15410, 15668
31.....15410
301 .....13440, 15064, 15668
Proposed Rules:
1 .....12041, 12312, 12313, 12838, 14417, 15101
54.....15101
301.....15107, 15687

27 CFR

9 .....12870, 12875, 12878

28 CFR

2.....12635

29 CFR

1910.....13753
4006.....15065
4007.....15065
4022.....13754
4044.....13754
Proposed Rules:
403.....11754
2540.....15688
4001.....14735
4211.....14735
4219.....14735

30 CFR

943.....14179

31 CFR

1.....15671
356.....14937
800.....15078
901.....12272

32 CFR

240.....12011
700.....12274

33 CFR

3.....15079
100.....12881
110.....13125
117 .....12884, 12886, 12888, 12889, 13127, 13128, 13756
165 .....11814, 12637, 12891, 13129, 13756, 13759, 14181
Proposed Rules:
100.....12669, 15108
110.....12925
117.....12315, 13160
165.....12318
181.....14193

34 CFR

Proposed Rules:
99.....15574
668.....15336
673.....15336
674.....15336
675.....15336
676.....15336
682.....15336
685.....15336
686.....15336
690.....15336

36 CFR

242.....13761
Proposed Rules:
223.....15694
228.....15694
261.....15694
292.....15694
293.....15694

37 CFR

2.....13780
258.....14183
Proposed Rules:
1.....12679

39 CFR

20.....12274
956.....12893, 13131
Proposed Rules:
111 .....11564, 12321, 13812

40 CFR

51.....15604
52 .....11553, 11554, 11557, 11560, 12011, 12639, 12893, 12895, 13440, 14387, 14389, 14687, 15081, 15083, 15411, 15416, 15672
59.....15421, 15604
63.....12275
80.....13132
81 .....11557, 11560, 12013, 14391, 14687, 15083, 15087
86.....13441
180 .....11816, 11820, 11826, 11831, 13136, 14713, 14714, 15425
268.....12017
271.....12277, 13141
300.....14719
Proposed Rules:
51.....11375
52 .....11564, 11565, 11845, 11846, 12041, 13813, 14426, 15111, 15470
55.....13822
59.....15470
63.....14126
80.....13163
86.....13518
93.....11375
122.....12321
158.....11848
161.....11848
268.....12043
271.....12340, 13167
300.....14742
372.....12045
761.....12053

41 CFR

301-10.....13784
Proposed Rules:
301-10.....11576

42 CFR

447.....13785
Proposed Rules:
423.....14342

44 CFR

64.....14185
65.....12640, 12644
67.....12647
Proposed Rules:
67 .....12684, 12691, 12695, 12697

45 CFR

670.....14939
Proposed Rules:
95.....12341
1160.....11577

46 CFR

401.....15092

47 CFR

0.....11561
6.....14941
15.....15431
27.....15431
54.....11837, 15431
64.....13144, 14941
73 .....11353, 13452, 15284, 15431
76.....12279, 15431
Proposed Rules:
32.....11580, 11587
36.....11580, 11587
54 .....11580, 11587, 11591
63.....11587, 11591
73.....12061, 12928

48 CFR

225.....11354

232 11356
252 ....11354, 11356
2152 14727
Proposed Rules:
13 12699
19 12699
1537 11602
1552 11602

49 CFR

1 14727
541 13150
622 13368
1572 13155
Proposed Rules:
39 14427
192 13167
380 15471
383 15471
384 15471
571 ....12354, 13825
Ch. X 13523

50 CFR

92 13788
100 13761
224 12024
229 ....11837, 14396
300 12280
622 ....14942, 15674, 15676
648 ....13463, 14187
679 ....11562, 11840, 12031, 12297, 12663, 12897, 12898, 13156, 13464, 14728, 15096, 15458, 15677
697 11563
Proposed Rules:
17 ....12065, 12067, 12929, 14950
223 ....11849, 12941, 13185, 14195
224 ....11849, 12941, 13185, 14195
226 12068
600 14428
648 ....11376, 11606, 12941, 14748, 15111, 15716
660 14765
679 ....11851, 12357
680 ....14766, 15118

REMINDERS

The items in this list were editorially compiled as an aid to Federal Register users. Inclusion or exclusion from this list has no legal significance.

RULES GOING INTO EFFECT MARCH 25, 2008

ENVIRONMENTAL PROTECTION AGENCY

State Operating Permit Programs:

Ohio; published 1-25-08

FEDERAL COMMUNICATIONS COMMISSION

Maritime Communications; published 1-25-08

HEALTH AND HUMAN SERVICES DEPARTMENT

Food and Drug Administration

New Animal Drugs for Use in Animal Feed; Pyrantel; Technical Amendment; published 3-25-08

TRANSPORTATION DEPARTMENT

Federal Aviation Administration

Airworthiness Directives:

Cameron Balloons Ltd. Models AX5-42 (S.1), et al.; published 3-5-08

TREASURY DEPARTMENT

Internal Revenue Service

Abandonment of Stock or Other Securities; Correction; published 3-25-08

TREASURY DEPARTMENT

Privacy Act; Implementation; published 3-25-08

COMMENTS DUE NEXT WEEK

AGRICULTURE DEPARTMENT

Animal and Plant Health Inspection Service

Agency Information Collection Activities; Proposals, Submissions, and Approvals; comments due by 3-31-08; published 1-29-08 [FR E8-01529]

Brucellosis in Cattle; State and Area Classifications; Texas; comments due by 4-1-08; published 2-1-08 [FR E8-01853]

Change in Disease Status of Surrey County, England, Because of Foot - and - Mouth Disease; comments due by 3-31-08; published 1-30-08 [FR E8-01653]

Importation of Cattle from Mexico:

Addition of Port at San Luis, AZ; comments due by 3-31-08; published 1-29-08 [FR E8-01533]

Removal of Quarantined Area:

Mexican Fruit Fly; comments due by 3-31-08; published 1-29-08 [FR E8-01531]

AGRICULTURE DEPARTMENT

Grain Inspection, Packers and Stockyards Administration

United States Standards for Beans; comments due by 4-1-08; published 2-1-08 [FR E8-01819]

United States Standards for Whole Dry Peas, Split Peas, and Lentils; comments due by 4-1-08; published 2-1-08 [FR E8-01820]

COMMERCE DEPARTMENT

National Oceanic and Atmospheric Administration

Fisheries of the Exclusive Economic Zone Off Alaska:

Individual Fishing Quota Program; Community Development Quota Program; comments due by 4-4-08; published 3-5-08 [FR E8-04247]

Magnuson-Stevens Act Provisions; Experimental Permitting Process, Exempted Fishing Permits, and Scientific Research Activity; comments due by 4-4-08; published 3-18-08 [FR E8-05425]

Marine Mammals: Advanced Notice of Proposed Rulemaking; comments due by 3-31-08; published 1-31-08 [FR E8-01666]

DEFENSE DEPARTMENT

Federal Acquisition Regulation:

Limiting Length of Noncompetitive Contracts in Unusual and Compelling Urgency Circumstances; comments due by 3-31-08; published 1-31-08 [FR E8-01681]

ENERGY DEPARTMENT

Defense Priorities and Allocations System; comments due by 3-31-08; published 2-29-08 [FR E8-03773]

ENERGY DEPARTMENT

Federal Energy Regulatory Commission

Agency Information Collection Activities; Proposals, Submissions, and Approvals; comments due by 3-31-08; published 1-30-08 [FR E8-01594]

ENVIRONMENTAL PROTECTION AGENCY

Approval and Promulgation of Air Quality Implementation Plans; Delaware; Control of Stationary Generator Emissions; comments due by 4-4-08; published 3-5-08 [FR E8-04256]

Approval and Promulgation of Implementation Plans:

Illinois; comments due by 4-3-08; published 3-4-08 [FR E8-04154]

Iowa; comments due by 4-3-08; published 3-4-08 [FR E8-04046]

Motor Vehicle Emissions Budgets; New Jersey; comments due by 4-4-08; published 3-5-08 [FR E8-04233]

State of Iowa; comments due by 4-3-08; published 3-4-08 [FR E8-04042]

Environmental Statements; Notice of Intent:

Coastal Nonpoint Pollution Control Programs; States and Territories—

Florida and South Carolina; Open for comments until further notice; published 2-11-08 [FR 08-00596]

Fluopicolide; Pesticide Tolerance; comments due by 3-31-08; published 1-30-08 [FR E8-01525]

FARM CREDIT ADMINISTRATION

Farm credit system:

Funding and fiscal affairs, loan policies and operations, and funding operations—

Capital adequacy; Basel Accord; comments due by 3-31-08; published 10-31-07 [FR E7-21422]

FEDERAL COMMUNICATIONS COMMISSION

High-Cost Universal Service Support; Federal-State Joint Board on Universal Service; comments due by 4-3-08; published 3-4-08 [FR E8-04148]

Leased Commercial Access; comments due by 3-31-08; published 2-28-08 [FR 08-00871]

GENERAL SERVICES ADMINISTRATION

Federal Acquisition Regulation:

Limiting Length of Noncompetitive Contracts in Unusual and Compelling Urgency Circumstances; comments due by 3-31-08; published 1-31-08 [FR E8-01681]

Federal Travel Regulation:

Fly America Act; United States and European Union Open Skies Air Transport Agreement; comments due by 4-3-08; published 3-4-08 [FR E8-03970]

HOMELAND SECURITY DEPARTMENT

Changes to Requirements Affecting H-2A Nonimmigrants; comments due by 3-31-08; published 2-13-08 [FR E8-02532]

INTERIOR DEPARTMENT

Minerals Management Service

Bonus or Royalty Credits for Relinquishing Certain Leases Offshore Florida; comments due by 4-1-08; published 2-1-08 [FR E8-01860]

INTERNATIONAL TRADE COMMISSION

Rules of General Application and Adjudication and Enforcement; comments due by 3-31-08; published 2-15-08 [FR E8-02871]

JUSTICE DEPARTMENT

Application Procedures and Criteria for Approval of Nonprofit Budget and Credit Counseling Agencies by United States Trustees; comments due by 4-1-08; published 2-1-08 [FR E8-01451]

Procedures for Completing Uniform Forms of Trustee Final Reports:

Cases Filed Under Chapters 7, 12, and 13 of Title 11; comments due by 4-4-08; published 2-4-08 [FR E8-01450]

LABOR DEPARTMENT

Labor Statistics Bureau

Agency Information Collection Activities; Proposals, Submissions, and Approvals; comments due by 4-1-08; published 2-1-08 [FR E8-01803]

LABOR DEPARTMENT

Employment Standards Administration

Agency Information Collection Activities; Proposals, Submissions, and Approvals; comments due by 3-31-08; published 1-30-08 [FR E8-01616]

LABOR DEPARTMENT

Employment and Training Administration

Temporary Agricultural Employment of H-2A Aliens in the United States:

Modernizing the Labor Certification Process and Enforcement; comments due by 3-31-08; published 2-13-08 [FR E8-02525]

LABOR DEPARTMENT

Wage and Hour Division

Temporary Agricultural Employment of H-2A Aliens in the United States:

Modernizing the Labor Certification Process and Enforcement; comments due by 3-31-08; published 2-13-08 [FR E8-02525]

NATIONAL AERONAUTICS AND SPACE ADMINISTRATION

Federal Acquisition Regulation:

Limiting Length of Noncompetitive Contracts in Unusual and Compelling Urgency Circumstances; comments due by 3-31-08; published 1-31-08 [FR E8-01681]

ARTS AND HUMANITIES, NATIONAL FOUNDATION

National Foundation on the Arts and the Humanities

Technical Amendments to Reflect the New Authorization for a Domestic Indemnity Program; comments due by 4-3-08; published 3-4-08 [FR E8-04065]

POSTAL REGULATORY COMMISSION

Administrative Practice and Procedure, Postal Service; comments due by 4-1-08; published 2-1-08 [FR E8-01893]

SMALL BUSINESS ADMINISTRATION

Women-Owned Small Business Federal Contract Assistance Procedures; comments due by 3-31-08; published 2-28-08 [FR E8-03889]

STATE DEPARTMENT

Consular Services Fee Schedule; State Department, Overseas Embassies, and Consulates; comments due by 3-31-08; published 1-29-08 [FR E8-01343]

TRANSPORTATION DEPARTMENT

Federal Aviation Administration

Airworthiness Directives:

Airbus Model A300 and A300-600 Series Airplanes; comments due by 3-31-08; published 2-29-08 [FR E8-03823]

Airbus Model A330-200 and A340-300 Series Airplanes; comments due by 4-2-08; published 3-3-08 [FR E8-03969]

Boeing Model 737 600, 700, 700C, 800 and 900 Series Airplanes; comments due by 3-31-08; published 2-15-08 [FR E8-02887]

Boeing Model 747 100, et al. Series Airplanes; comments due by 3-31-08; published 2-13-08 [FR E8-02588]

Cameron Balloons Ltd. Models AX5-42 (S.1), et al.; comments due by 4-4-08; published 3-5-08 [FR 08-00786]

Dornier Luftfahrt GmbH Models 228-200, 228-201, 228-202, and 228-212 Airplanes; comments due by 4-4-08; published 3-5-08 [FR 08-00929]

Airworthiness directives:

Eurocopter Deutschland GmbH Model EC135 Helicopters; comments due by 4-1-08; published 2-1-08 [FR E8-01702]

Airworthiness Directives:

Lockheed Model 382, 382B, 382E, 382F, and 382G Series Airplanes; comments due by 3-31-08; published 2-13-08 [FR E8-02742]

McDonnell Douglas Model DC-10-10 et al. Airplanes; comments due by 4-1-08; published 3-7-08 [FR E8-04475]

Amendment of Class E Airspace:

Gettysburg, Pa.; comments due by 3-31-08; published 2-14-08 [FR 08-00615]

Establishment of Class E Airspace:

Cranberry Township, PA.; comments due by 3-31-08; published 2-14-08 [FR 08-00616]

Seneca, PA.; comments due by 3-31-08; published 2-14-08 [FR 08-00614]

Establishment of Class E Airspace; Huntsville, AR; comments due by 3-31-08; published 2-15-08 [FR 08-00663]

Establishment of Class E Airspace; Lexington, OK; comments due by 3-31-08; published 2-15-08 [FR 08-00662]

Low Altitude Area Navigation Routes (T-Routes) Proposed Establishment; Southwest Oregon; comments due by 3-31-08; published 2-14-08 [FR E8-02759]

Proposed Establishment of Class E Airspace; White Hills, AK; comments due by 4-4-08; published 2-19-08 [FR E8-02976]

Proposed Establishment of Low Altitude Area Navigation Routes (T-Routes):

Sacramento and San Francisco, CA; comments due by 4-4-08; published 2-19-08 [FR E8-02978]

Proposed Revision of Class E Airspace; Allakaket, AK; comments due by 4-4-08; published 2-19-08 [FR E8-02967]

Proposed Revision of Class E Airspace; St. Mary's, AK; comments due by 4-4-08; published 2-19-08 [FR E8-02977]

TREASURY DEPARTMENT

Internal Revenue Service

Diversification Requirements for Certain Defined Contribution Plans; comments due by 4-2-08; published 1-3-08 [FR E7-25533]

Income taxes:

Nuclear decommissioning funds; comments due by 3-31-08; published 12-31-07 [FR E7-25222]

Pension funding; assets and liabilities measurement; comments due by 3-31-08; published 12-31-07 [FR E7-25125]

Procedure and administration:

Census Bureau; disclosure of return information; comments due by 3-31-08; published 12-31-07 [FR E7-25127]

LIST OF PUBLIC LAWS

This is a continuing list of public bills from the current session of Congress which have become Federal laws. It may be used in conjunction with "P L U S" (Public Laws Update Service) on 202–741–6043. This list is also available online at *http://www.archives.gov/federal-register/laws.html*.

The text of laws is not published in the **Federal Register** but may be ordered in "slip law" (individual pamphlet) form from the Superintendent of Documents, U.S. Government Printing Office, Washington, DC 20402 (phone, 202–512–1808). The text will also be made available on the Internet from GPO Access at *http://www.gpoaccess.gov/plaws/index.html*. Some laws may not yet be available.

S. 2745/P.L. 110–196

To extend agricultural programs beyond March 15, 2008, to suspend permanent price support authorities beyond that date, and for other purposes. (Mar. 14, 2008; 122 Stat. 653)

S.J. Res. 25/P.L. 110–197

Providing for the appointment of John W. McCarter as a citizen regent of the Board of Regents of the Smithsonian Institution. (Mar. 14, 2008; 122 Stat. 655)

Last List March 13, 2008

Public Laws Electronic Notification Service (PENS)

PENS is a free electronic mail notification service of newly enacted public laws. To subscribe, go to *http://listserv.gsa.gov/archives/publaws-l.html*

Note: This service is strictly for E-mail notification of new laws. The text of laws is not available through this service. **PENS** cannot respond to specific inquiries sent to this address.