AUTHENTICATED U.S. GOVERNMENT INFORMATION GPO

# Federal Register

9–17–08 Wednesday
Vol. 73 No. 181 Sept. 17, 2008

Pages 53685–54056

The **FEDERAL REGISTER** (ISSN 0097–6326) is published daily, Monday through Friday, except official holidays, by the Office of the Federal Register, National Archives and Records Administration, Washington, DC 20408, under the Federal Register Act (44 U.S.C. Ch. 15) and the regulations of the Administrative Committee of the Federal Register (1 CFR Ch. I). The Superintendent of Documents, U.S. Government Printing Office, Washington, DC 20402 is the exclusive distributor of the official edition. Periodicals postage is paid at Washington, DC.

The **FEDERAL REGISTER** provides a uniform system for making available to the public regulations and legal notices issued by Federal agencies. These include Presidential proclamations and Executive Orders, Federal agency documents having general applicability and legal effect, documents required to be published by act of Congress, and other Federal agency documents of public interest.

Documents are on file for public inspection in the Office of the Federal Register the day before they are published, unless the issuing agency requests earlier filing. For a list of documents currently on file for public inspection, see *www.federalregister.gov.*

**The seal of the National Archives and Records Administration authenticates the Federal Register** as the official serial publication established under the Federal Register Act. Under 44 U.S.C. 1507, the contents of the **Federal Register** shall be judicially noticed.

The **Federal Register** is published in paper and on 24x microfiche. It is also available online at no charge as one of the databases on GPO Access, a service of the U.S. Government Printing Office.

The online edition of the **Federal Register** *www.gpoaccess.gov/nara,* available through GPO Access, is issued under the authority of the Administrative Committee of the Federal Register as the official legal equivalent of the paper and microfiche editions (44 U.S.C. 4101 and 1 CFR 5.10). It is updated by 6 a.m. each day the **Federal Register** is published and includes both text and graphics from Volume 59, Number 1 (January 2, 1994) forward.

For more information about GPO Access, contact the GPO Access User Support Team, call toll free 1-888-293-6498; DC area 202-512-1530; fax at 202-512-1262; or via e-mail at *gpoaccess@gpo.gov.* The Support Team is available between 7:00 a.m. and 9:00 p.m. Eastern Time, Monday–Friday, except official holidays.

The annual subscription price for the **Federal Register** paper edition is $749 plus postage, or $808, plus postage, for a combined **Federal Register, Federal Register** Index and List of CFR Sections Affected (LSA) subscription; the microfiche edition of the **Federal Register** including the **Federal Register** Index and LSA is $165, plus postage. Six month subscriptions are available for one-half the annual rate. The prevailing postal rates will be applied to orders according to the delivery method requested. The price of a single copy of the daily **Federal Register,** including postage, is based on the number of pages: $11 for an issue containing less than 200 pages; $22 for an issue containing 200 to 400 pages; and $33 for an issue containing more than 400 pages. Single issues of the microfiche edition may be purchased for $3 per copy, including postage. Remit check or money order, made payable to the Superintendent of Documents, or charge to your GPO Deposit Account, VISA, MasterCard, American Express, or Discover. Mail to: U.S. Government Printing Office—New Orders, P.O. Box 979050, St. Louis, MO 63197-9000; or call toll free 1-866-512-1800, DC area 202-512-1800; or go to the U.S. Government Online Bookstore site, see *bookstore.gpo.gov.*

There are no restrictions on the republication of material appearing in the **Federal Register.**

**How To Cite This Publication:** Use the volume number and the page number. Example: 73 FR 12345.

**Postmaster:** Send address changes to the Superintendent of Documents, Federal Register, U.S. Government Printing Office, Washington, DC 20402, along with the entire mailing label from the last issue received.

## SUBSCRIPTIONS AND COPIES

**PUBLIC**

**Subscriptions:**

| | |
|---|---|
| Paper or fiche | **202–512–1800** |
| Assistance with public subscriptions | **202–512–1806** |
| **General online information** | **202–512–1530; 1–888–293–6498** |

**Single copies/back copies:**

| | |
|---|---|
| Paper or fiche | **202–512–1800** |
| Assistance with public single copies | **1–866–512–1800 (Toll-Free)** |

**FEDERAL AGENCIES**

**Subscriptions:**

| | |
|---|---|
| Paper or fiche | **202–741–6005** |
| Assistance with Federal agency subscriptions | **202–741–6005** |

**FEDERAL REGISTER WORKSHOP**

**THE FEDERAL REGISTER: WHAT IT IS AND HOW TO USE IT**

FOR: Any person who uses the Federal Register and Code of Federal Regulations.

WHO: Sponsored by the Office of the Federal Register.

WHAT: Free public briefings (approximately 3 hours) to present:

1. The regulatory process, with a focus on the Federal Register system and the public's role in the development of regulations.

2. The relationship between the Federal Register and Code of Federal Regulations.

3. The important elements of typical Federal Register documents.

4. An introduction to the finding aids of the FR/CFR system.

WHY: To provide the public with access to information necessary to research Federal agency regulations which directly affect them. There will be no discussion of specific agency regulations.

WHEN: Tuesday, September 23, 2008
9:00 a.m.–12:30 p.m.

WHERE: Office of the Federal Register
Conference Room, Suite 700
800 North Capitol Street, NW.
Washington, DC 20002

RESERVATIONS: (202) 741–6008

Printed on recycled paper.

# Contents

**Federal Register**

Vol. 72, No. 181

Wednesday, September 17, 2008

**Agriculture Department**
*See* Forest Service
*See* Natural Resources Conservation Service
**NOTICES**
Privacy Act; Abolish Systems of Records, 53817

**Air Force Department**
**NOTICES**
Intent to Grant an Exclusive Patent License; Correction, 53853
Meetings:
Air University Board of Visitors, 53853–53854

**Army Department**
**NOTICES**
Record of Decision:
Army Growth and Force Structure Realignment To Support Operations in the Pacific Theater, 53854

**Centers for Disease Control and Prevention**
**NOTICES**
Agency Information Collection Activities; Proposals, Submissions, and Approvals, 53876–53877

**Children and Families Administration**
*See* Refugee Resettlement Office

**Coast Guard**
**RULES**
Financial Responsibility for Water Pollution (Vessels) and OPA 90 Limits of Liability (Vessels and Deepwater Ports), 53691–53705

**Commerce Department**
*See* International Trade Administration
*See* National Oceanic and Atmospheric Administration

**Corporation for National and Community Service**
**RULES**
AmeriCorps National Service Program, 53752–53762

**Defense Department**
*See* Air Force Department
*See* Army Department
**RULES**
Federal Acquisition Regulation:
FAR Case 2005-018, Contract Debts, 53997–54007
FAR Case 2006-004, CAS Administration, 54013–54014
FAR Case 2006-014, Local Community Recovery Act of 2006, 53995–53996
FAR Case 2006-025, Online Representations and Certifications Application Review, 54011
FAR Case 2006-027, Accepting and Dispensing of $1 Coin, 54014–54016
FAR Case 2007-002, Cost Accounting Standards Administration and Associated Federal Acquisition Regulation Clauses, 54011–54013
FAR Case 2007-007, Additional Requirements for Competition Advocate Annual Reports, 53996–53997
FAR Case 2007-015, Administrative Changes to the FPI Blanket Waiver and the JWOD Program Name, 53994–53995
FAR Case 2007-020, Correcting Statutory References Related to the Higher Education Act of 1965, 53992–53993
FAR Case 2007-022, Subcontractor Requests for Bonds, 54007–54008
FAR Case 2008-001, Changing the Name of the Office of Small and Disadvantaged Business Utilization for DoD, 53993–53994
FAR Case 2008-002, Extension of Authority for Use of Simplified Acquisition Procedures for Certain Commercial Items, 54008
FAR Case 2008-006, Enhanced Competition for Task and Delivery Order Contracts-Section 843 of the Fiscal Year 2008 National Defense Authorization Act, 54008–54010
Federal Acquisition Circular 2005-27; Introduction, 53990–53992
Federal Acquisition Circular 2005-27; Small Entity Compliance Guide, 54016–54018
Technical Amendment, 54016
**NOTICES**
Meetings:
Defense Advisory Board for Employer Support of the Guard and Reserve; Cancellation, 53853
National Security Education Board Group of Advisors, 53853

**Education Department**
**NOTICES**
Agency Information Collection Activities; Proposals, Submissions, and Approvals; Correction, 53855

**Energy Department**
*See* Federal Energy Regulatory Commission
**NOTICES**
Agency Information Collection Activities; Proposals, Submissions, and Approvals, 53855–53856
Meetings:
Environmental Management Site-Specific Advisory Board, Portsmouth, 53856
Ultra-Deepwater Advisory Committee, 53856–53857
Unconventional Resources Technology Advisory Committee, 53857

**Environmental Protection Agency**
**RULES**
Approval and Promulgation of Air Quality Implementation Plans:
Texas; Control of Air Pollution by Permits for New Construction or Modification, 53716–53718
Inert Ingredient; Exemption from the Requirement of a Tolerance:
Amylopectin, acid-hydrolyzed, 1-octenylbutanedioate and for amylopectin, hydrogen 1-octadecenylbutanedioate, 53721–53725
Outer Continental Shelf Air Regulations Consistency Update for Massachusetts, 53718–53721
Pesticide Tolerances:
Ethoprop, 53725–53732

Tolerance Actions:
2,4-D, Bensulide, Chlorpyrifos, DCPA, Desmedipham, Dimethoate, Fenamiphos, Metolachlor, Phorate, Sethoxydim, Terbufos, Tetrachlorvinphos, and Triallate, 53732–53742
Underground Storage Tank Program:
Approved State Program for Hawaii, 53742–53747
NOTICES
Biobor Registration Review:
Antimicrobial Pesticide Docket Opened for Review and Comment, 53861–53863
Final Registration Review Decision:
Trichoderma Species and Linalool, 53863–53864
Meetings:
Coastal Elevations and Sea Level Rise Advisory Committee, 53864–53865
Interagency Steering Committee on Radiation Standards, 53865
NPDES Program Management Information Rule, 53865–53866
Pre-Renovation Education Program; State of Michigan Authorization Application, 53866–53868
Proposed Agreement Pursuant to Section 122(h)(1) of the Comprehensive Environmental Response, Compensation, and Liability Act:
Bofors Nobel Site, MI, 53868

**Executive Office of the President**
*See* Management and Budget Office
*See* Presidential Documents

**Federal Aviation Administration**
PROPOSED RULES
Airworthiness Directives:
Airbus Model A300-600 Airplanes, 53768–53770
Airbus Model A330 Airplanes, and Model A340 200 and A340-300 Series Airplanes, 53770–53773
Bombardier Model CL 600 2B19 (Regional Jet Series 100 & 440) Airplanes, 53773–53775
Diamond Aircraft Industries GmbH Model DA 42 Airplanes, 53766–53768
Pilatus Aircraft Ltd. Model PC 6 Series Airplanes, 53764–53766
NOTICES
Agency Information Collection Activities; Proposals, Submissions, and Approvals, 53923–53925
Intent To Rule on Request To Release Airport Property:
Smyrna/Rutherford County Airport, Smyrna, TN, 53925
Meetings:
RTCA Special Committee 2O5, EUROCAE Working Group 71, Software Considerations in Aeronautical Systems, 53925–53926
RTCA Special Conmiittee 213, Enhanced Flight Vision Systems/Synthetic Vision Systems, EUROCAE Working Group 79, 53926

**Federal Communications Commission**
NOTICES
Suspension and Initiation of Debarment Proceedings:
Schools and Libraries Universal Service Support Mechanism, 53868–53870

**Federal Emergency Management Agency**
RULES
Changes in Flood Elevation Determinations, 53750–53752
Suspension of Community Eligibility, 53747–53750
PROPOSED RULES
Proposed Flood Elevation Determinations, 53809–53816
NOTICES
Agency Information Collection Activities; Proposals, Submissions, and Approvals, 53884–53887
Emergency and Related Determinations:
Alabama, 53887
Florida, 53887–53888
Louisiana, 53888
Mississippi, 53888–53889
Texas, 53889–53890
Emergency Declaration:
Alabama, 53890
Texas, 53890–53891
Emergency Declarations:
Texas, 53891
Major Disaster and Related Determinations:
Alabama, 53891
Louisiana, 53892
Maine, 53892–53893
New Hampshire, 53893
Major Disaster Declaration:
Florida, 53893–53894
Iowa, 53894
Louisiana, 53894–53895
Michigan, 53895–53896
Missouri, 53896

**Federal Energy Regulatory Commission**
NOTICES
Combined Notice of Filings, 53857–53861

**Federal Highway Administration**
NOTICES
Final Federal Agency Actions on Proposed Highway in Pennsylvania, 53926–53927

**Federal Maritime Commission**
NOTICES
Agreements Filed, 53870
Ocean Transportation Intermediary License Applicants, 53870–53871
Ocean Transportation Intermediary License Rescission of Order of Revocation, 53871–53872

**Federal Reserve System**
RULES
Equal Credit Opportunity, 53685
NOTICES
Agency Information Collection Activities; Proposals, Submissions, and Approvals, 53872–53873

**Federal Trade Commission**
NOTICES
Granting of Request for Early Termination of The Waiting Period Under The Premerger Notification Rules, 53873–53876

**Financial Management Service**
*See* Fiscal Service

**Fiscal Service**
NOTICES
Agency Information Collection Activities; Proposals, Submissions, and Approvals, 53930–53931

**Fish and Wildlife Service**
NOTICES
Endangered and Threatened Wildlife and Plants; Permits, 53898

**Food and Drug Administration**
RULES
Medical Devices:
Medical Device Reporting; Baseline Reports; Confirmation of Effective Date, 53686
Oral Dosage Form New Animal Drugs:
Sulfadiazine/Pyrimethamine Suspension, 53685–53686
PROPOSED RULES
Beverages; Bottled Water, 53775–53793
NOTICES
Agency Information Collection Activities; Proposals, Submissions, and Approvals, 53877–53879

**Forest Service**
RULES
Hazardous Fuel Reduction Projects Authorized Under the Healthy Forests Restoration Act of 2003:
Predecisional Administrative Review Process, 53705–53716
NOTICES
Determination of Substantial Overriding Public Interest for Extending Certain Timber Sale Contracts, 53817–53820
Forest Certification and its Implications for America's National Forests, 53820–53823
Forest Service Special Use Permits:
Final Directives for Forest Service Outfitting and Guiding Special Use Permits and Insurance Requirements, 53823–53845
Meetings:
National Urban and Community Forestry Advisory Council, 53846

**General Services Administration**
RULES
Federal Acquisition Regulation:
FAR Case 2005-018, Contract Debts, 53997–54007
FAR Case 2006-004, CAS Administration, 54013–54014
FAR Case 2006-014, Local Community Recovery Act of 2006, 53995–53996
FAR Case 2006-025, Online Representations and Certifications Application Review, 54011
FAR Case 2006-027, Accepting and Dispensing of $1 Coin, 54014–54016
FAR Case 2007-002, Cost Accounting Standards Administration and Associated Federal Acquisition Regulation Clauses, 54011–54013
FAR Case 2007-007, Additional Requirements for Competition Advocate Annual Reports, 53996–53997
FAR Case 2007-015, Administrative Changes to the FPI Blanket Waiver and the JWOD Program Name, 53994–53995
FAR Case 2007-020, Correcting Statutory References Related to the Higher Education Act of 1965, 53992–53993
FAR Case 2007-022, Subcontractor Requests for Bonds, 54007–54008
FAR Case 2008-001, Changing the Name of the Office of Small and Disadvantaged Business Utilization for DoD, 53993–53994
FAR Case 2008-002, Extension of Authority for Use of Simplified Acquisition Procedures for Certain Commercial Items, 54008
FAR Case 2008-006, Enhanced Competition for Task and Delivery Order Contracts-Section 843 of the Fiscal Year 2008 National Defense Authorization Act, 54008–54010
Federal Acquisition Circular 2005-27; Introduction, 53990–53992
Federal Acquisition Circular 2005-27; Small Entity Compliance Guide, 54016–54018
Technical Amendment, 54016

**Health and Human Services Department**
*See* Centers for Disease Control and Prevention
*See* Food and Drug Administration
*See* Health Resources and Services Administration
*See* National Institutes of Health
*See* Refugee Resettlement Office

**Health Resources and Services Administration**
NOTICES
Part C Early Intervention Services Grant, 53879–53880
Universal Newborn Hearing Screening and Intervention Program, 53880

**Homeland Security Department**
*See* Coast Guard
*See* Federal Emergency Management Agency
*See* Transportation Security Administration

**Information Security Oversight Office**
NOTICES
Meetings:
Public Interest Declassification Board, 53905

**Interior Department**
*See* Fish and Wildlife Service
*See* Land Management Bureau
*See* Minerals Management Service
*See* National Park Service

**Internal Revenue Service**
RULES
Unified Rule for Loss on Subsidiary Stock, 53934–53987
PROPOSED RULES
Unified Rule for Loss on Subsidiary Stock, 53793

**International Trade Administration**
NOTICES
Antidumping:
Raw Flexible Magnets from Taiwan, 53848–53849
Raw Flexible Magnets from the People's Republic of China, 53847–53848
Countervailing Duty Order:
Raw Flexible Magnets from the People's Republic of China, 53849–53850

**Justice Department**
NOTICES
Lodging of Consent Decrees Under Clean Air Act:
United States v. St. Marys Cement Inc. (U.S.) and St. Barbara Cement Inc., 53903

**Labor Department**
NOTICES
Agency Information Collection Activities; Proposals, Submissions, and Approvals, 53903–53904

**Land Management Bureau**
NOTICES
Environmental Impact Statements; Availability, etc.:
Pinedale Anticline Oil and Gas Exploration and Development Project, 53898–53899

**Management and Budget Office**
NOTICES
Compliance Assistance Resources and Points of Contact Available to Small Businesses, 53908–53909

**Maritime Administration**
NOTICES
Agency Information Collection Activities; Proposals, Submissions, and Approvals, 53927

**Millennium Challenge Corporation**
RULES
Freedom of Information Act Regulations, 53686–53691

**Minerals Management Service**
PROPOSED RULES
Production Measurement and Training Requirements; Technical Changes, 53793–53798

**National Aeronautics and Space Administration**
RULES
Federal Acquisition Regulation:
FAR Case 2005-018, Contract Debts, 53997–54007
FAR Case 2006-004, CAS Administration, 54013–54014
FAR Case 2006-014, Local Community Recovery Act of 2006, 53995–53996
FAR Case 2006-025, Online Representations and Certifications Application Review, 54011
FAR Case 2006-027, Accepting and Dispensing of $1 Coin, 54014–54016
FAR Case 2007-002, Cost Accounting Standards Administration and Associated Federal Acquisition Regulation Clauses, 54011–54013
FAR Case 2007-007, Additional Requirements for Competition Advocate Annual Reports, 53996–53997
FAR Case 2007-015, Administrative Changes to the FPI Blanket Waiver and the JWOD Program Name, 53994–53995
FAR Case 2007-020, Correcting Statutory References Related to the Higher Education Act of 1965, 53992–53993
FAR Case 2007-022, Subcontractor Requests for Bonds, 54007–54008
FAR Case 2008-001, Changing the Name of the Office of Small and Disadvantaged Business Utilization for DoD, 53993–53994
FAR Case 2008-002, Extension of Authority for Use of Simplified Acquisition Procedures for Certain Commercial Items, 54008
FAR Case 2008-006, Enhanced Competition for Task and Delivery Order Contracts-Section 843 of the Fiscal Year 2008 National Defense Authorization Act, 54008–54010
Federal Acquisition Circular 2005-27; Introduction, 53990–53992
Federal Acquisition Circular 2005-27; Small Entity Compliance Guide, 54016–54018
Technical Amendment, 54016

**National Archives and Records Administration**
*See* Information Security Oversight Office
NOTICES
Agency Information Collection Activities; Proposals, Submissions, and Approvals, 53904

**National Council on Disability**
NOTICES
Meetings; Sunshine Act, 53905

**National Highway Traffic Safety Administration**
PROPOSED RULES
Federal Motor Vehicle Safety Standards:
Motorcycle Brake Systems, 54020–54047
NOTICES
Receipt of Petitions for Decision that Nonconforming Vehicles are Eligible for Importation:
1997-2001 Jeep Cherokee Multipurpose Passenger Vehicles, 53927–53929

**National Institutes of Health**
NOTICES
Meetings:
Center for Scientific Review, 53880–53882
National Center for Research Resources Special Emphasis Panel, 53882
National Institute of Allergy and Infectious Diseases, 53883
National Institute of Biomedical Imaging and Bioengineering, 53884
National Institute of General Medical Sciences, 53883
National Institute on Drug Abuse, 53883

**National Oceanic and Atmospheric Administration**
RULES
Fisheries off West Coast States:
Pacific Coast Groundfish Fishery; End of the Pacific Whiting Primary Season for the Catcher-processor, Mothership and Shore-based Sectors, 53763
PROPOSED RULES
Fisheries of the Exclusive Economic Zone Off Alaska:
Revised Management Authority for Dark Rockfish in the Bering Sea and Aleutian Islands Management Area and the Gulf of Alaska, 53816
NOTICES
Channel Islands National Marine Sanctuary Advisory Council; Availability of Seats, 53851
Gray's Reef National Marine Sanctuary Advisory Council, Availability of Seats, 53851
Meetings:
Atlantic Highly Migratory Species; Atlantic Shark Management Measures, 53851–53852
Science Advisory Board, 53852–53853

**National Park Service**
NOTICES
Environmental Impact Statements; Availability, etc.:
Manassas National Battlefield Park, VA; General Management Plan, 53899
Meetings:
Committee for the Preservation of the White House, 53899

**Natural Resources Conservation Service**
NOTICES
Natural Resources Conservation Service's National Handbook of Conservation Practices; Proposed Changes, 53846–53847

**Nuclear Regulatory Commission**
NOTICES
Decommissioning of the U. S. Army Research, Development And Engineering Command, Army Research Laboratory, Aberdeen Proving Ground, MD
Consideration of Amendment Request and Opportunity to Request a Hearing, 53905–53907
Environmental Impact Statements; Availability, etc.:
Old Dominion University, Norfolk, VA; Finding of No Significant Impact for License Amendment, 53907–53908

Meetings:
Advisory Committee on Reactor Safeguards; Subcommittee on Materials, Metallurgy & Reactor Fuels, 53908

**Office of Management and Budget**
*See* Management and Budget Office

**Pipeline and Hazardous Materials Safety Administration**
NOTICES
Applications for Modification of Special Permit, 53929–53930

**Presidential Documents**
PROCLAMATIONS
*Special observances:*
National Employer Support of the Guard and Reserve Week (Proc. 8288), 54053–54054
National Hispanic Heritage Month (Proc. 8287), 54049–54052
ADMINISTRATIVE ORDERS
Trade:
Trading With the Enemy Act; continuation of certain authorities (Presidential Determination), 54055

**President's Council on Integrity and Efficiency**
NOTICES
Senior Executive Service Performance Review Board; Membership, 53900–53903

**Public Debt Bureau**
*See* Fiscal Service

**Railroad Retirement Board**
NOTICES
Agency Information Collection Activities; Proposals, Submissions, and Approvals, 53909

**Refugee Resettlement Office**
NOTICES
Noncompetitive Successor Award to Northern Virginia Family Service, 53884

**Securities and Exchange Commission**
NOTICES
Order of Suspension of Trading:
B.B. Walker Co., Bellatrix International, Inc., Belmont Resources, Inc., et al., 53909–53910
Self-Regulatory Organizations; Proposed Rule Changes:
BATS Exchange, Inc., 53910–53911
NASDAQ Stock Market LLC, 53911–53912
New York Stock Exchange LLC, 53912–53915
NYSE Arca, Inc., 53915–53918

**Small Business Administration**
NOTICES
Gulf Opportunity Pilot Loan Program, 53918–53919
Revocation of License of Small Business Investment Company:
Anthem Capital, L.P., 53919

**Social Security Administration**
NOTICES
Agency Information Collection Activities; Proposals, Submissions, and Approvals, 53919–53922
Privacy Act; Computer Matching Program, 53922–53923

**State Department**
NOTICES
Meetings:
Advisory Committee on Private International Law, 53923

**Transportation Department**
*See* Federal Aviation Administration
*See* Federal Highway Administration
*See* Maritime Administration
*See* National Highway Traffic Safety Administration
*See* Pipeline and Hazardous Materials Safety Administration

**Transportation Security Administration**
NOTICES
Agency Information Collection Activities; Proposals, Submissions, and Approvals, 53896–53897
Airport Security, 53897–53898

**Treasury Department**
*See* Fiscal Service
*See* Internal Revenue Service
PROPOSED RULES
Terrorism Risk Insurance Program; Recoupment Provisions, 53798–53809
NOTICES
Senior Executive Service, Departmental Offices Performance Review Board; Appointment of Members, 53930

---

**Separate Parts In This Issue**

**Part II**
Treasury Department, Internal Revenue Service, 53934–53987

**Part III**
Defense Department; General Services Administration; National Aeronautics and Space Administration, 53990–54018

**Part IV**
Transportation Department, National Highway Traffic Safety Administration, 54020–54047

**Part V**
Executive Office of the President, Presidential Documents, 54049–54055

---

**Reader Aids**
Consult the Reader Aids section at the end of this issue for phone numbers, online resources, finding aids, reminders, and notice of recently enacted public laws.

To subscribe to the Federal Register Table of Contents LISTSERV electronic mailing list, go to http://listserv.access.gpo.gov and select Online mailing list archives, FEDREGTOC-L, Join or leave the list (or change settings); then follow the instructions.

## CFR PARTS AFFECTED IN THIS ISSUE

A cumulative list of the parts affected this month can be found in the Reader Aids section at the end of this issue.


**3 CFR**

**Proclamations:**

8287 ....54051
8288 ....54053

**Administrative Orders:**

Presidential Determinations:
No. 2008-27 of September 12, 2008 ....54055

**12 CFR**

202 ....53685

**14 CFR**

**Proposed Rules:**

39 (5 documents) ....53674, 53766, 53768, 53770, 53773

**21 CFR**

520 ....53685
803 ....53686

**Proposed Rules:**

129 ....53775
165 ....53775

**22 CFR**

1304 ....53686

**26 CFR**

1 ....53934
602 ....53934

**Proposed Rules:**

1 ....53793

**30 CFR**

**Proposed Rules:**

250 ....53793

**31 CFR**

**Proposed Rules:**

50 ....53798

**33 CFR**

138 ....53691

**36 CFR**

215 ....53705
218 ....53705

**40 CFR**

52 ....53716
55 ....53718
180 (3 documents) ....53721, 53725, 53732
282 ....53742

**44 CFR**

64 (2 documents) ....53747, 53748
65 ....53750

**Proposed Rules:**

67 (2 documents) ....53809, 53814

**45 CFR**

2510 ....53752
2513 ....53752
2516 ....53752
2517 ....53752
2520 ....53752
2521 ....53752
2522 ....53752
2523 ....53752
2524 ....53752
2540 ....53752
2541 ....53752
2550 ....53752

**48 CFR**

Ch. 1 (2 documents) ....53990, 54016
2 (2 documents) ....53992, 53993
4 ....53994
5 ....53995
6 (2 documents) ....53995, 53996
8 ....53994
9 ....53994
12 (3 documents) ....53995, 53997, 54007
13 (2 documents) ....53997, 54008
15 ....54016
16 ....54008
18 (2 documents) ....53994, 53995
19 ....53993
23 ....54011
26 ....53995
30 (2 documents) ....54011, 54013
32 ....53997
33 ....53997
36 ....53997
37 ....54014
42 ....53997
44 ....53994
52 (8 documents) ....53992, 53994, 53995, 53997, 54011, 54013, 54014, 54016

**49 CFR**

**Proposed Rules:**

571 ....54020

**50 CFR**

660 ....53763

**Proposed Rules:**

679 ....53816

# Rules and Regulations

Federal Register
Vol. 73, No. 181
Wednesday, September 17, 2008

This section of the FEDERAL REGISTER contains regulatory documents having general applicability and legal effect, most of which are keyed to and codified in the Code of Federal Regulations, which is published under 50 titles pursuant to 44 U.S.C. 1510.

The Code of Federal Regulations is sold by the Superintendent of Documents. Prices of new books are listed in the first FEDERAL REGISTER issue of each week.

## FEDERAL RESERVE SYSTEM

### 12 CFR Part 202

**[Regulation B; Docket No. R–1327]**

### Equal Credit Opportunity

**AGENCY:** Board of Governors of the Federal Reserve System.

**ACTION:** Final rule; technical amendment.

**SUMMARY:** The Board is publishing amendments to Regulation B (Equal Credit Opportunity Act) to update the address where questions should be directed concerning creditors for which the Office of Thrift Supervision administers compliance with the regulation.

**DATES:** *Effective Date:* October 17, 2008. Compliance is optional until September 17, 2009.

**FOR FURTHER INFORMATION CONTACT:** Jamie Z. Goodson, Attorney, Division of Consumer and Community Affairs, Board of Governors of the Federal Reserve System, at (202) 452–3667. For the users of Telecommunications Device for the Deaf (''TDD'') only, contact (202) 263–4869.

**SUPPLEMENTARY INFORMATION:** The Equal Credit Opportunity Act (ECOA), 15 U.S.C. 1691–1691f, makes it unlawful for a creditor to discriminate against an applicant in any aspect of a credit transaction on the basis of the applicant's national origin, marital status, religion, sex, color, race, age (provided the applicant has the capacity to contract), receipt of public assistance benefits, or the good faith exercise of a right under the Consumer Credit Protection Act, 15 U.S.C. 1601 *et seq.* The ECOA is implemented by the Board's Regulation B.

In addition to the general prohibition against discrimination, Regulation B contains specific rules concerning the taking and evaluation of credit applications, including procedures and notices for credit denials and other adverse actions. Under section 202.9 of Regulation B, notification given to an applicant when adverse action is taken must contain the name and address of the federal agency that administers compliance with respect to the creditor. Appendix A of Regulation B contains the names and addresses of the enforcement agencies where questions concerning a particular creditor shall be directed. This amendment updates the address for the Office of Thrift Supervision. Creditors for which the Office of Thrift Supervision administers compliance with Regulation B must include this new address on their adverse action notices starting September 17, 2009.

**List of Subjects in 12 CFR Part 202**

Aged, Banks, Banking, Civil rights, Consumer protections, Credit, Discrimination, Federal Reserve System, Marital status discrimination, Penalties, Religious discrimination, Sex discrimination.

**Authority and Issuance**

■ For the reasons set forth in the preamble, the Board amends 12 CFR part 202 to read as follows:

## PART 202—EQUAL CREDIT OPPORTUNITY ACT (REGULATION B)

■ 1. The authority citation for part 202 continues to read as follows:

**Authority:** Section 15 U.S.C. 1691–1691f.

■ 2. Appendix A is amended by removing the fifth and sixth paragraphs and adding a new paragraph in their place to read as follows:

## APPENDIX A TO PART 202—FEDERAL ENFORCEMENT AGENCIES

* * * * *

*Savings institutions under the Savings Association Insurance Fund of the FDIC and federally chartered savings banks insured under the Bank Insurance Fund of the FDIC (but not including state-chartered savings banks insured under the Bank Insurance Fund):* Office of Thrift Supervision, Consumer Response Unit, 1700 G Street, NW., Washington, DC 20552.

* * * * *

By order of the Board of Governors of the Federal Reserve System, acting through the Secretary of the Board under delegated authority, September 11, 2008.

**Robert deV. Frierson,**
*Deputy Secretary of the Board.*

[FR Doc. E8–21629 Filed 9–16–08; 8:45 am]

**BILLING CODE 6210–01–P**

## DEPARTMENT OF HEALTH AND HUMAN SERVICES

### Food and Drug Administration

### 21 CFR Part 520

**[Docket No. FDA–2008–N–0039]**

### Oral Dosage Form New Animal Drugs; Sulfadiazine/Pyrimethamine Suspension

**AGENCY:** Food and Drug Administration, HHS.

**ACTION:** Final rule.

**SUMMARY:** The Food and Drug Administration (FDA) is amending the animal drug regulations to reflect approval of a supplemental new animal drug application (NADA) filed by Animal Health Pharmaceuticals, LLC. The supplemental NADA provides for a revised human food safety warning on labeling for an oral suspension of sulfadiazine and pyrimethamine used for the treatment of equine protozoal myeloencephalitis (EPM).

**DATES:** This rule is effective September 17, 2008.

**FOR FURTHER INFORMATION CONTACT:** Melanie R. Berson, Center for Veterinary Medicine (HFV–110), Food and Drug Administration, 7500 Standish Pl., Rockville, MD 20855, 240–276–8337, e-mail: *melanie.berson@fda.hhs.gov*.

**SUPPLEMENTARY INFORMATION:** Animal Health Pharmaceuticals, LLC, 1805 Oak Ridge Circle, suite 101, St. Joseph, MO 64506, filed a supplement to NADA 141–240 for use of REBALANCE (sulfadiazine/pyrimethamine) Antiprotozoal Oral Suspension for the treatment of EPM caused by *Sarcocystis neurona*. The supplement provides for a revised human food safety warning on labeling. The supplemental NADA is approved as of August 27, 2008, and 21 CFR 520.2215 is amended to reflect the approval.

Approval of this supplemental NADA did not require review of additional safety or effectiveness data or

information. Therefore, a freedom of information summary is not required.

The agency has determined under 21 CFR 25.33(a)(1) that this action is of a type that does not individually or cumulatively have a significant effect on the human environment. Therefore, neither an environmental assessment nor an environmental impact statement is required.

This rule does not meet the definition of ''rule'' in 5 U.S.C. 804(3)(A) because it is a rule of ''particular applicability.'' Therefore, it is not subject to the congressional review requirements in 5 U.S.C. 801–808.

**List of Subjects in 21 CFR Part 520**

Animal drugs.

■ Therefore, under the Federal Food, Drug, and Cosmetic Act and under authority delegated to the Commissioner of Food and Drugs and redelegated to the Center for Veterinary Medicine, 21 CFR part 520 is amended as follows:

## PART 520—ORAL DOSAGE FORM NEW ANIMAL DRUGS

■ 1. The authority citation for 21 CFR part 520 continues to read as follows:

**Authority:** 21 U.S.C. 360b.

■ 2. In 520.2215, revise paragraph (c)(3) to read as follows:

**§ 520.2215 Sulfadiazine/pyrimethamine suspension.**

* * * * *

(c) * * *

(3) *Limitations.* Do not use in horses intended for human consumption. Federal law restricts this drug to use by or on the order of a licensed veterinarian.

Dated: September 5, 2008.

**William T. Flynn,**

*Acting Director, Center for Veterinary Medicine.*

[FR Doc. E8–21625 Filed 9–16–08; 8:45 am]

BILLING CODE 4160–01–S

## DEPARTMENT OF HEALTH AND HUMAN SERVICES

### Food and Drug Administration

### 21 CFR Part 803

**[Docket No. FDA–2008–N–0310]**

### Medical Devices; Medical Device Reporting; Baseline Reports; Confirmation of Effective Date

**AGENCY:** Food and Drug Administration, HHS.

**ACTION:** Direct final rule; confirmation of effective date.

**SUMMARY:** The Food and Drug Administration (FDA) is confirming the effective date of October 27, 2008, for the final rule that appeared in the **Federal Register** of June 13, 2008 (73 FR 33692). The direct final rule amends the Medical Device Reporting regulation by removing the requirement for baseline reports. This document confirms the effective date of the direct final rule.

**DATES:** Effective date confirmed: October 27, 2008.

**FOR FURTHER INFORMATION CONTACT:** Howard A. Press, Center for Devices and Radiological Health (HFZ–531), Food and Drug Administration, 1350 Piccard Dr., Rockville, MD 20850, 240–276–3457.

**SUPPLEMENTARY INFORMATION:** In the **Federal Register** of June 13, 2008 (73 FR 33692), FDA solicited comments concerning the direct final rule for a 75-day period ending August 27, 2008. FDA stated that the effective date of the direct final rule would be on October 27, 2008, 60 days after the end of the comment period, unless any significant adverse comment was submitted to FDA during the comment period. FDA did not receive any significant adverse comments.

**Authority:** Therefore, under the Federal Food, Drug, and Cosmetic Act and the Public Health Service Act, and under authority delegated to the Commissioner of Food and Drugs, the amendments issued thereby become effective on October 27, 2008.

Dated: September 11, 2008.

**Jeffrey Shuren,**

*Associate Commissioner for Policy and Planning.*

[FR Doc. E8–21756 Filed 9–16–08; 8:45 am]

BILLING CODE 4160–01–S

## MILLENNIUM CHALLENGE CORPORATION

### 22 CFR Part 1304

### Regulations Implementing the Freedom of Information Act

**AGENCY:** Millennium Challenge Corporation.

**ACTION:** Final rule.

**SUMMARY:** The Millennium Challenge Corporation is issuing a final rule to update its Freedom of Information Act regulations. The purpose of this final rule is to outline the procedures by which the Millennium Challenge Corporation proposes to implement the relevant provisions of the Freedom of Information Act as required under that statute. This document will assist interested parties in obtaining access to Millennium Challenge Corporation public records.

**DATES:** This final rule is effective on September 17, 2008.

**ADDRESSES:** Send comments to John Mantini, FOIA Officer, Office of the General Counsel, Millennium Challenge Corporation, 875 Fifteenth Street, NW., Washington, DC 20005–2221.

**FOR FURTHER INFORMATION CONTACT:** John Mantini, FOIA Officer, 202–521–3863.

**SUPPLEMENTARY INFORMATION:** The Millennium Challenge Act (MCA) of 2003 established a new federal agency called the Millennium Challenge Corporation. Congress enacted the Freedom of Information Act (FOIA) in 1966 and last modified it with the Electronic Freedom of Information Act amendments of 1996. On August 28, 2007, the Millennium Challenge Corporation published a proposed rule in the **Federal Register**, 72 FR 49238, Aug. 28, 2007 to outline its procedures to implement the FOIA regulations and requested public comments. The Millennium Challenge Corporation received no comments during the 60-day comment period. The Millennium Challenge Corporation's final regulations are identical to those in the proposed rule.

This final rule addresses electronically available documents, procedures for making requests, agency handling of requests, records not disclosed, changes in fees, and public reading rooms as well as other related provisions.

**List of Subjects in 22 Part 1304**

Freedom of Information Act Procedures.

■ For the reasons set forth in the preamble, the Millennium Challenge Corporation adds 22 CFR part 1304 as follows:

## PART 1304—FREEDOM OF INFORMATION ACT PROCEDURES

Sec.

1304.1 General Provisions.
1304.2 Definitions.
1304.3 Records available to the public.
1304.4 Requests for records.
1304.5 Responsibility for responding to requests.
1304.6 Records not disclosed.
1304.7 Confidential commercial information.
1304.8 Appeals.
1304.9 Fees.

**Authority:** 5 U.S.C. 552, as amended.

**§ 1304.1 General Provisions.**

This part contains the regulations the Millennium Challenge Corporation (MCC) follows in implementing the

Freedom of Information Act (FOIA) (5 U.S.C. 552) as amended. These regulations provide procedures by which you may obtain access to records compiled, created, and maintained by MCC, along with the procedures that MCC must follow in response to such requests for records. These regulations should be read together with the FOIA, which provides additional information about access to records maintained by MCC.

**§ 1304.2 Definitions.**

*Agency* has the meaning set forth in 5 U.S.C. 552(f)(1).

*Commercial use requester* means a requester seeking information for a use or purpose that furthers the commercial, trade, or profit interests of himself or the person on whose behalf the request is made, which can include furthering those interests through litigation. In determining whether a request properly belongs in this category, the FOIA Officer shall determine the use to which the requester will put the documents requested. Where the FOIA Officer has reasonable cause to doubt the use to which the requester will put the records sought, or where that use is not clear from the request itself, the FOIA Officer shall contact the requester for additional clarification before assigning the request to a specific category.

*Confidential commercial information* means records provided to the government by a submitter that arguably contains material exempt from disclosure under Exemption 4 of the FOIA, because disclosure could reasonably be expected to cause substantial competitive harm.

*Direct costs* mean those expenditures by MCC actually incurred in searching for and duplicating records in response to the FOIA request. These costs include the salary of the employee(s) performing the work (basic rate of pay plus a percentage of that rate to cover benefits) and the cost of operating duplicating machinery. Direct costs do not include overhead expenses, such as the cost of space, heating, or lighting of the facility in which the records are stored.

*Duplication* means the process of making a copy of a record in order to respond to a FOIA request, including paper copies, microfilm, audio-video materials, and computer diskettes or other electronic copies.

*Educational institution* refers to a preschool, a public or private elementary or secondary school, an institute of undergraduate higher education, an institute of graduate higher education, an institute of professional education, or an institute of vocational education which operates a program of scholarly research. To qualify for this category, the requester must show that the request is authorized by and is made under the auspices of a qualifying institution and that the records are not sought for a commercial use, but are sought to further scholarly research.

*FOIA* means the Freedom of Information Act, as amended (5 U.S.C. 552).

*FOIA Officer* means the MCC employee who is authorized to make determinations as provided in this part. The mailing address for the FOIA Officer is: Millennium Challenge Corporation, Attn: FOIA Officer, 875 Fifteenth Street, NW., Washington, DC 20005.

*Non-commercial scientific institution* refers to an institution that is not operated on a ''commercial'' basis as that term is used in paragraph (a) of this section, and which is operated solely for the purpose of conducting scientific research the results of which are not intended to promote any particular product or industry. To qualify for this category, the requester must show that the request is authorized by and is made under the auspices of a qualifying institution and that the records are not sought for a commercial use, but are sought to further scholarly research.

*Record* means information or documentary material MCC maintains in any form or format, including an electronic form or format, which MCC:

(1) Made or received under federal law or in connection with the transaction of public business;

(2) Preserved or determined is appropriate for preservation as evidence of MCC operations or activities or because of the value of the information it contains; and

(3) Controls at the time it receives a request.

*Representative of the news media* means any person actively gathering news for an entity that is organized and operated to publish or broadcast news to the public. The term ''news'' means information that is about current events or that would be of current interest to the public. For a ''freelance journalist'' to be regarded as working for a news organization, the requester must demonstrate a solid basis for expecting publication through that organization, such as a publication contract. Absent such showing, the requester may provide documentation establishing the requester's past publication record. To qualify for this category, the requester must not be seeking the requested records for a commercial use. However, a request for records supporting a news-dissemination function shall not be considered to be for a commercial use.

*Requester* means any person, including an individual, corporation, firm, organization, or other entity, who makes a request to MCC under FOIA for records.

*Review* means the process of examining a record to determine whether all or part of the record may be withheld, and includes redacting or otherwise processing the record for disclosure to a requester. It does not include time spent:

(1) Resolving legal or policy issues regarding the application of exemptions to a record; or

(2) At the administrative appeal level, unless MCC determines that the exemption under which it withheld records does not apply and the records are reviewed again to determine whether a different exemption may apply.

*Search* means the time spent locating records responsive to a request, manually or by electronic means, including page-by-page or line-by-line identification of responsive material within a record.

*Submitter* means any person or entity which provides information directly or indirectly to MCC. The term includes, but is not limited to, corporations, state governments and foreign governments.

*Working day* means a Federal workday that does not include Saturdays, Sundays, or Federal holidays.

**§ 1304.3 Records available to the public.**

(a) *General.* (1) It is the policy of MCC to respond promptly to all FOIA requests.

(2) MCC may disclose records that were previously published or disclosed or are customarily furnished to the public in the course of the performance of official duties without complying with this part. These records include, but are not limited to, the annual report that MCC submits to Congress pursuant to section 613(a) of the Millennium Challenge Act of 2003 (22 U.S.C. 7701), press releases, MCC forms, and materials published in the **Federal Register**. MCC should first determine whether the information requested is already available on its Web site, which contains information readily accessible to the public. In such an event, MCC will contact the requesting party, either orally or in writing, to advise the individual of the availability of the information on the public Web site. MCC should document this request and the manner in which it handled the file. Where MCC makes the determination that the information requested is not

already publicly accessible, MCC should adhere to the procedures outlined in this part for processing a FOIA request and any administrative appeals received.

(b) *Public Reading room.* (1) Records that are required to be maintained by MCC shall be available for public inspection and copying at 875 Fifteenth Street, NW., Washington, DC 20005. Reading room records created on or after November 1, 1996 shall be made available electronically via the Web site at *http://www.mcc.gov.*

(2) MCC shall assess fees for searching, reviewing, or duplicating reading room records in accordance with § 1304.9.

**§ 1304.4 Requests for records.**

(a) *Request requirements.* Requests for access to, or copies of, MCC records shall be in writing and addressed to the FOIA Officer. Each request shall include the following:

(1) A description of the requested record that provides sufficient detail to enable MCC to locate the record with a reasonable amount of effort;

(2) The requestor's full name, mailing address, and a telephone number where the requester can be reached during normal business hours;

(3) A statement that the request is made pursuant to FOIA; and

(4) At the discretion of the requestor, a dollar limit on the fees MCC may incur to respond to the request for records. MCC shall not exceed such limit.

(b) *Incomplete Requests.* If a request does not meet all of the requirements of paragraph (a) of this section, the FOIA Officer may advise the requester that additional information is needed. If the requester submits a corrected request, the FOIA Officer shall treat the corrected request as a new request.

**§ 1304.5 Responsibility for responding to requests.**

(a) *General.* In determining which records are responsive to a request, MCC ordinarily will include only records in its possession as of the date it begins its search for records. If any other date is used, the FOIA Officer shall inform the requester of that date.

(b) *Authority to grant or deny requests.* The FOIA Officer shall make initial determinations either to grant or deny in whole or in part a request for records. When the FOIA Officer denies the request in whole or in part, the FOIA Officer shall notify the requester of the denial, the grounds for the denial, and the procedures for appeal of the denial under § 1304.8.

(c) *Consultations and referrals.* When a requested record has been created by another Federal Government agency, that record shall be referred to the originating agency for direct response to the requester. The requester shall be informed of the referral. As this is not a denial of a FOIA request, no appeal rights are afforded to the requester. When a requested record is identified as containing information originating with another Federal Government agency, the record shall be referred to the originating agency for review and recommendation on disclosure.

(d) *Timing and deadlines.* (1) The FOIA Officer ordinarily shall respond to requests according to their order of receipt.

(2) The FOIA Officer may use multi-track processing in responding to requests. This process entails separating simple requesters that require rather limited review from more lengthy and complex requests. Requests in each track are then processed according to paragraph (d)(1) of this section in their respective track.

(3) The FOIA Officer may provide requesters in the slower track an opportunity to limit the scope of their requests in order to decrease the processing time required. The FOIA Officer may provide such an opportunity by contacting the requester by letter or telephone.

(4) The FOIA Officer shall make an initial determination regarding access to the requested information and notify the requester within twenty (20) working days after receipt of the request. This 20 day period may be extended if unusual circumstances arise. If an extension is necessary, the FOIA Officer shall promptly notify the requester of the extension, briefly providing the reasons for the extension, the date by which a determination is expected, and providing the requester with the opportunity to modify the request so that the FOIA Officer may process it in accordance with the 20 day period. Unusual circumstances warranting extension are:

(i) The need to search for and collect the requested records from field facilities or other establishments that are separate from the officeprocessing the request;

(ii) The need to search for, collect, and appropriately examine a lengthy amount of records which are demanded in a single request; or

(iii) The need for consultation with another agency having a substantial interest in the determination of the request, which consultation shall be conducted with all practicable speed.

(iv) If the FOIA Officer has a reasonable basis to conclude that a requester or group of requesters has divided a request into a series of requests on a single subject or related subject to avoid fees, the requests may be aggregated and fees charged accordingly. Multiple requests involving unrelated matters will not be aggregated.

(5) If no initial determination has been made at the end of the 20 day period provided for in paragraph (d)(4) of this section, including any extension, the requester may appeal the action to the FOIA Appeals Officer.

(e) *Expedited processing of request.* The FOIA Officer must determine whether to grant a request for expedited processing within 10 calendar days of its receipt. Requests will receive expedited processing if one of the following listed compelling reasons is met:

(1) The requester can establish that failure to receive the records quickly could reasonably be expected to pose an imminent threat to the life or physical safety of an individual; or

(2) The requester is primarily engaged in disseminating information and can demonstrate that an urgency to inform the public concerning actual or alleged Federal Government activity exists.

(f) *Providing responsive records.* The FOIA Officer shall provide one copy of a record to a requester in any form or format requested if the record is readily reproducible by MCC in that form or format by regular U.S. mail to the address indicated in the request, unless other arrangements are made. At the option of the requester and upon the requester's agreement to pay fees in accordance with § 1304.9, the FOIA Officer shall provide copies by facsimile transmission or other express delivery methods.

**§ 1304.6 Records not disclosed.**

(a) *Records exempt from disclosure.* Except as otherwise provided in this part, MCC shall not disclose records that are:

(1) Specifically authorized under criteria established by an Executive order to be kept secret in the interest of national defense or foreign policy and are in fact properly classified pursuant to such Executive order.

(2) Related solely to the MCC's internal personnel rules and practices.

(3) Specifically exempted from disclosure by a statute other than FOIA if such statute requires the record to be withheld from the public in such a manner as to leave no discretion on the issue, establishes particular criteria for withholding, or refers to particular types of records to be withheld.

(4) Trade secrets and commercial or financial information obtained from a person and privileged or confidential.

(5) Inter- or intra-agency memorandums or letters that would not be available by law to a party other than an agency in litigation with MCC.

(6) Personnel, medical, or similar files the disclosure of which would constitute a clearly unwarranted invasion of personal privacy.

(7) Compiled for law enforcement purposes, but only to the extent that the production of such law enforcement records or information:

(i) Could reasonably be expected to interfere with enforcement proceedings;

(ii) Would deprive a person of a right to a fair trial or an impartial adjudication;

(iii) Could reasonably be expected to constitute an unwarranted invasion of personal privacy;

(iv) Could reasonably be expected to disclose the identity of a confidential source, including a State, local, or foreign agency or authority, any private institution, or a Bank, which furnished information on a confidential basis, and, in the case of a record compiled by criminal law enforcement authority in the course of a criminal investigation or by an agency conducting a lawful national security investigation, information furnished by a confidential source;

(v) Would disclose techniques and procedures for law enforcement investigations or prosecutions, or would disclose guidelines for law enforcement investigations or prosecutions if such disclosure could reasonably be expected to risk circumvention of the law; or

(vi) Could reasonably be expected to endanger the life or physical safety of any individual.

(8) Contained in or related to examination, operating, or condition reports prepared by, on behalf of, or for the use of an agency responsible for the regulation or supervision of financial institutions; or

(9) Geological and geophysical information and data, including maps, concerning wells.

(b) *Reasonably segregable portions.* (1) MCC shall provide a requester with any reasonably segregable portion of a record after deleting the portions that are exempt from disclosure under paragraph (a) of this section.

(2) MCC shall make a reasonable effort to estimate the volume of removed information and provide that information to the requester unless providing the estimate would harm an interest protected by the exemption under which the removal is made.

(3) MCC shall indicate the estimated volume of removed information on the released portion of the record unless providing the estimate would harm an interest protected by the exemption under which the removal is made. If technically feasible, MCC shall make the indication at the place in the record where the removal is made.

(c) *Public interest.* MCC may disclose records it has authority to withhold under paragraph (a) of this section upon a determination that disclosure would be in the public interest.

**§ 1304.7 Confidential commercial information.**

(a) *Notice to submitters.* The FOIA Officer shall, to the extent permitted by law, provide a submitter who provides confidential commercial information to the FOIA Officer, with prompt notice of a FOIA request or administrative appeal encompassing the confidential commercial information if the Commission may be required to disclose the information under the FOIA. Such notice shall either describe the exact nature of the information requested or provide copies of the records or portions thereof containing the confidential commercial information. The FOIA Officer shall also notify the requester that notice and an opportunity to object has been given to the submitter.

(b) *Where notice is required.* Notice shall be given to a submitter when:

(1) The information has been designated by the submitter as confidential commercial information protected from disclosure. Submitters of confidential commercial information shall use good faith efforts to designated either at the time of submission or a reasonable time thereafter, those portions of their submissions they deem protected from disclosure under Exemption 4 of the FOIA because disclosure could reasonably be expected to cause substantial competitive harm. Such designation shall be deemed to have expired ten years after the date of submission, unless the requester provides reasonable justification for a designation period of greater duration; or

(2) The FOIA Officer has reason to believe that the information may be protected from disclosure under Exemption 4 of the FOIA.

(c) *Opportunity to object to disclosure.* The FOIA Officer shall afford a submitter a reasonable period of time to provide the FOIA Officer with a detailed written statement of any objection to disclosure. The statement shall specify all grounds for withholding any of the information under any exemption of the FOIA, and if Exemption 4 applies, shall demonstrate the reasons the submitter believes the information to be confidential commercial information that is exempt from disclosure. Whenever possible, the submitter's claim of confidentiality shall be supported by a statement or certification by an officer or authorized representative of the submitter. In the event a submitter fails to respond to the notice in the time specified, the submitter will be considered to have no objection to the disclosure of the information. Information provided by the submitter that is received after the disclosure decision has been made will not be considered. Information provided by a submitter pursuant to this paragraph may itself be subject to disclosure under the FOIA.

(d) *Notice of intent to disclose.* The FOIA Officer shall carefully consider a submitter's objections and specific grounds for nondisclosure prior to determining whether to disclose the information requested. Whenever the FOIA Officer determines that disclosure is appropriate, the FOIA Officer shall, within a reasonable number of days prior to disclosure, provide the submitter with written notice of the intent to disclose which shall include a statement of the reasons for which the submitter's objections were overruled, a description of the information to be disclosed, and a specific disclosure date. The FOIA Officer shall also notify the requester that the requested records will be made available.

(e) *Notice of lawsuit.* If the requester files a lawsuit seeking to compel disclosure of confidential commercial information, the FOIA Officer shall promptly notify the submitter of this action. If a submitter files a lawsuit seeking to prevent disclosure of confidential commercial information, the FOIA Officer shall notify the requester.

(f) *Exceptions to the notice requirements under this section.* The notice requirements under paragraphs (a) and (b) of this section shall not apply if:

(1) The FOIA Officer determines that the information should not be disclosed pursuant to Exemption 4 and/or any other exemption of the FOIA;

(2) The information lawfully has been published or officially made available to the public;

(3) Disclosure of the information is required by law (other than the FOIA);

(4) The information requested is not designated by the submitter as exempt from disclosure in accordance with this part, when the submitter had the opportunity to do so at the time of submission of the information or within a reasonable time thereafter, unless the agency has substantial reason to believe that disclosure of the information would result in competitive harm; or

(5) The designation made by the submitter in accordance with this part appears obviously frivolous. When the FOIA Officer determines that a submitter was frivolous in designating information as confidential, the FOIA Officer must provide the submitter with written notice of any final administrative disclosure date, but no opportunity to object to disclosure will be offered.

**§ 1304.8 Appeals.**

(a) *Right of appeal.* The requester has the right to appeal to the FOIA Appeals Officer any adverse determination.

(b) *Notice of appeal*—(1) *Timing for appeal.* An appeal must be received no later than thirty (30) working days after notification of denial of access to records or after the time limit for response by the FOIA Officer has expired. Prior to submitting an appeal any outstanding fees related to FOIA requests must be paid in full.

(2) *Method of appeal.* An appeal shall be initiated by filing a written notice of appeal. The notice shall be accompanied by copies of the original request and initial denial of access to records. To expedite the appellate process and give the requester an opportunity to present his or her arguments, the notice should contain a brief statement of the reasons why the requester believes the initial denial of access to records was in error. The appeal shall be addressed to the Millennium Challenge Corporation, *Attn:* FOIA Appeals Officer, 875 Fifteenth Street, NW., Washington, DC 20005.

(c) *Final agency determinations.* The FOIA Appeals Officer shall issue a final written determination, stating the basis for his or her decision, within twenty (20) working days after receipt of a notice of appeal. If the determination is to provide access to the requested records, the FOIA Officer shall make those records immediately available to the requester. If the determination upholds the denial of access to the requested records, the FOIA Appeals Officer shall notify the requester of the determination.

**§ 1304.9 Fees.**

(a) *General.* Fees pursuant to the FOIA shall be assessed according to the schedule contained in paragraph (b) of this section for services rendered by MCC in response to requests for records under this part. MCC's fee practices are governed by the FOIA and by the Office of Management and Budget's Uniform Freedom of Information Act Fee Schedule and Guidelines. All fees shall be charged to the requester, except where the charging of fees is limited under paragraph (d) of this section or where a waiver or reduction of fees is granted under paragraph (c) of this section. Payment of fees should be in U.S. Dollars in the form of either a check or bank draft drawn on a bank in the United States or a money order. Payment should be made payable to the Treasury of the United States and mailed to the Millennium Challenge Corporation, 875 Fifteenth Street, NW., Washington, DC 20005.

(b) *Charges for responding to FOIA requests.* The following fees shall be assessed in responding to requests for records submitted under this part, unless a waiver or reduction of fees has been granted pursuant to paragraph (c) of this section:

(1) *Duplications.* The FOIA Officer shall charge $0.20 per page for copies of documents up to 8½ x 14. For copies prepared by computer, the FOIA Officer will charge actual costs of production of the computer printouts, including operator time. For other methods of reproduction, the FOIA Officer shall charge the actual costs of producing the documents.

(2) *Searches*—(i) *Manual searches.* Search fees will be assessed at the rate of $25.30 per hour. Charges for search time less than a full hour will be in increments of quarter hours.

(ii) *Computer searches.* The FOIA Officer will charge the actual direct costs of conducting computer searches. These direct costs shall include the cost of operating the central processing unit for that portion of operating time that is directly attributable to searching for requested records, as well as the costs of operator/programmer salary apportionable to the search. MCC is not required to alter or develop programming to conduct searches.

(3) *Review fees.* Review fees shall be assessed only with respect to those requesters who seek records for a commercial use under paragraph (d)(1) of this section. Review fees shall be assessed at the rate of $43.63 per hour. Review fees shall be assessed only for the initial record review, for example, review undertaken when the FOIA Officer analyzes the applicability of a particular exemption to a particular record or portion thereof at the initial request level. No charge shall be assessed at the administrative appeal level of an exemption already applied.

(c) *Statutory waiver.* Documents shall be furnished without charge or at a charge below that listed in paragraph (b) of this section where it is determined, based upon information provided by a requester or otherwise made known to the FOIA Officer, that disclosure of the requested information is in the public interest. Disclosure is in the public interest if it is likely to contribute significantly to public understanding of government operations and is not primarily for commercial purposes. Requests for a waiver or reduction of fees shall be considered on a case-by-case basis. In order to determine whether the fee waiver requirement is met, the FOIA Officer shall consider the following six factors:

(1) The subject of the request. Whether the subject of the requested records concerns the operations or activities of the government;

(2) The informative value of the information to be disclosed. Whether disclosure is likely to contribute to an understanding of government operations or activities;

(3) The contribution to an understanding of the subject by the general public likely to result from disclosure. Whether disclosure of the requested information will contribute to public understanding;

(4) The significance of the contribution to public understanding. Whether the disclosure is likely to contribute significantly to public understanding of government operations or activities;

(5) The existence and magnitude of commercial interest. Whether the requester has a commercial interest that would be furthered by the requested disclosure; and, if so

(6) The primary interest in disclosure. Whether the magnitude of the identified commercial interest of the requester is sufficiently large, in comparison with the public interest in disclosure, that disclosure is primarily in the commercial interest of the requester.

(d) *Types of requesters.* There are four categories of FOIA requesters: Commercial use requesters; educational and non-commercial scientific institutional requesters; representatives of the news media; and all other requesters. These terms are defined in § 1304.2. The following specific levels of fees are prescribed for each of these categories:

(1) *Commercial use requesters.* The FOIA Officer shall charge commercial use requesters the full direct costs of searching for, reviewing, and duplicating requested records.

(2) *Educational and non-commercial scientific institution requesters.* The FOIA Officer shall charge educational and non-commercial scientific institution requesters for document duplication only, except that the first 100 pages of paper copies shall be provided without charge.

(3) *News media requesters.* The FOIA Officer shall charge news media requesters for document duplication costs only, except that the first 100 pages of paper copies shall be provided without charge.

(4) *All other requesters.* The FOIA Officer shall charge requesters who do not fall into any of the categories in paragraphs (d)(1) through (3) of this section fees which recover the full reasonable direct costs incurred for searching for and reproducing records if that total cost exceeds $14.99, except that the first 100 pages of duplication and the first two hours of manual search time shall not be charged.

(e) *Charges for unsuccessful searches.* If the requester has been notified of the estimated cost of the search time and has been advised specifically that the requested records may not exist or may be withheld as exempt, fees may be charged.

(f) *Nonpayment of fees.* The FOIA Officer may assess interest charges on an unpaid bill, accrued under previous FOIA request(s), starting the thirty-first (31st) day following the day on which the bill was sent to the requester. Interest will be at the rate prescribed in 31 U.S.C. 3717. MCC will require the requester to pay the full amount owed plus any applicable interest as provided above, and to make an advance payment of the full amount of the remaining estimated fee before MCC will begin to process a new request or continue processing a then-pending request from the requester. The administrative response time limits prescribed in subsection (a)(6) of the FOIA will begin only after MCC has received fee payments described in this section.

(g) *Aggregating requests.* The requester or a group of requesters may not submit multiple requests at the same time, each seeking portions of a document or documents solely in order to avoid payment of fees. When the FOIA Officer reasonably believes that a requester is attempting to divide a request into a series of requests to evade an assessment of fees, the FOIA Officer may aggregate such request and charge accordingly.

(h) *Advance payment of fees.* Fees may be paid upon provision of the requested records, except that payment will be required prior to that time if the requester has previously failed to pay fees or if the FOIA Officer determines the total fee will exceed $250.00. When payment is required in advance of the processing of a request, the time limits prescribed in § 1304.5 shall not be deemed to begin until the FOIA Officer has received payment of the assessed fee. Where it is anticipated that the cost of providing the requested record will exceed $25.00 but fall below $250.00 after the free duplication and search time has been calculated, MCC may, in its discretion may require either:

(1) An advance deposit of the entire estimated charges; or

(2) Written confirmation of the requester's willingness to pay such charges.

Dated: September 5, 2008.

**John C. Mantini,**

*Chief FOIA Officer, Millennium Challenge Corporation.*

[FR Doc. E8–21335 Filed 9–16–08; 8:45 am]

BILLING CODE 9211–03–P

## DEPARTMENT OF HOMELAND SECURITY

## Coast Guard

## 33 CFR Part 138

**[Docket No. USCG–2005–21780]**

**RIN 1625–AA98**

## Financial Responsibility for Water Pollution (Vessels) and OPA 90 Limits of Liability (Vessels and Deepwater Ports)

**AGENCY:** Coast Guard, DHS.

**ACTION:** Final rule.

**SUMMARY:** The Coast Guard is amending the regulatory requirements, under the Oil Pollution Act of 1990 and the Comprehensive Environmental Response, Compensation and Liability Act, for vessel operators (as defined in the rule) to establish and maintain evidence of financial responsibility. The amendments ensure that the amounts of financial responsibility that must be demonstrated by vessel operators are consistent with recent statutory increases, and future mandated increases, to the limits of liability under the Oil Pollution Act of 1990. The amendments also implement changes in the Coast Guard's administration of the certificate of financial responsibility program, and clarify the current rule.

**DATES:** This final rule is effective October 17, 2008.

**ADDRESSES:** Comments and material received from the public, as well as documents mentioned in this preamble as being available in the docket, are part of docket USCG–2005–21780 and are available for inspection or copying at the Docket Management Facility (M–30), U.S. Department of Transportation, West Building Ground Floor, Room W12–140, 1200 New Jersey Avenue, SE., Washington, DC 20590, between 9 a.m. and 5 p.m., Monday through Friday, except Federal holidays. You may also find this docket on the Internet at *http://www.regulations.gov.*

**FOR FURTHER INFORMATION CONTACT:** If you have questions on this rule, call Benjamin White, National Pollution Funds Center, Coast Guard, telephone 202–493–6863. If you have questions on viewing the docket, call Renee V. Wright, Program Manager, Docket Operations, telephone 202–366–9826.

**SUPPLEMENTARY INFORMATION:**

### I. Acronyms

CERCLA Title I of the Comprehensive Environmental Response, Compensation, and Liability Act of 1980, as amended (42 U.S.C. 9601–9675).

CFR Code of Federal Regulations.

COFR Certificate of Financial Responsibility.

DPA Deepwater Port Act of 1974, as amended (33 U.S.C. 1501 *et seq.*).

DRPA Delaware River Protection Act of 2006, Title VI of the Coast Guard and Maritime Transportation Act of 2006, Public Law 109–241, July 11, 2006, 120 Stat. 516.

FRFA Final Regulatory Flexibility Analysis.

FR Federal Register.

Fund Oil Spill Liability Trust Fund.

IRFA Initial Regulatory Flexibility Analysis.

LOOP Louisiana Offshore Oil Port.

MODU Mobile Offshore Drilling Unit.

NEPA National Environmental Policy Act of 1969 (42 U.S.C. 4321–4370f).

NPRM Notice of Proposed Rulemaking.

OPA 90 The Oil Pollution Act of 1990, as amended (33 U.S.C. 2701, *et seq.*).

U.S.C. United States Code.

U.S.C.C.A.N. United States Code Congressional and Administrative News.

### II. Regulatory History

On August 18, 2006, before initiating this rulemaking, we published a notice of policy in the **Federal Register** (71 FR 47737) entitled ''New Oil Pollution Limits of Liability for Vessels—Delaware River Protection Act of 2006 Amendment to the Oil Pollution Act of 1990'' (hereafter the ''Notice of Policy'').

On February, 5, 2008, we published a notice of proposed rulemaking (NPRM) in the **Federal Register** (73 FR 6642), entitled ''Financial Responsibility for Water Pollution (Vessels) and OPA 90 Limits of Liability (Vessels and Deepwater Ports)''.

On February 13, 2008, we published corrections to the NPRM in the **Federal Register** (73 FR 8250), to clarify the proposed effective date of the rule and the distinction between the financial responsibility applicable amounts of § 138.80(f) and the OPA 90 limits of liability in proposed Subpart B.

We received seven letters during the public comment period raising 13

issues, and one additional letter after the public comment period closed on May 5, 2008, raising one issue. No public meeting was requested and none was held.

## III. Background and Purpose

In general, under the Oil Pollution Act of 1990, as amended (33 U.S.C. 2701, *et seq.*) (OPA 90), responsible parties (i.e., the owners and operators, including demise charterers) for a vessel or a facility from which oil is discharged, or which poses the substantial threat of a discharge of oil, into or upon the navigable waters or adjoining shorelines or the exclusive economic zone are liable for the removal costs and damages specified in OPA 90 that result from such incident, up to prescribed limits of liability. (33 U.S.C. 2702(a); 33 U.S.C. 2704). Embodying the polluter pays principle, this liability is strict, joint and several.[1] Similar requirements apply under Section 107 of the Comprehensive Environmental Response, Compensation and Liability Act of 1980, as amended (42 U.S.C. 9607) (CERCLA) to owners and operators of vessels and facilities that release or threaten to release hazardous substances.

The OPA 90 limits of liability are set out in 33 U.S.C. 2704(a). The CERCLA limits of liability are set out in 42 U.S.C. 9607.

In addition to the limit of liability provisions, 33 U.S.C. 2716(a) of OPA 90 and 42 U.S.C. 9608(a) of CERCLA require that the owners and operators, including demise charterers, of certain vessels establish and maintain evidence of financial responsibility (i.e., ability to pay) sufficient to meet the maximum amount of liability to which they could be subjected under 33 U.S.C. 2704 and 42 U.S.C. 9607.

According to 33 U.S.C. 2716(a)(1) and (2), the evidence of financial responsibility requirements apply, in relevant part for purposes of OPA 90, to responsible parties for: Any vessel over 300 gross tons (except a non-self propelled vessel that does not carry oil as cargo or fuel) using any place subject to the jurisdiction of the United States; and any vessel using the waters of the exclusive economic zone to transship or lighter oil destined for a place subject to the jurisdiction of the United States. OPA 90, at 33 U.S.C. 2716(c), also imposes evidence of financial responsibility requirements on offshore facilities and deepwater ports. This rulemaking, however, only concerns the OPA 90 evidence of financial responsibility requirements that must be met by vessels under 33 U.S.C. 2716(a).

The OPA 90 limits of liability are subject to amendment both by statute and, under 33 U.S.C. 2704(d), by regulation, and when the limits of liability are amended the financial responsibility requirements must be adjusted by regulation. On July 11, 2006, the President signed the Delaware River Protection Act of 2006, Title VI of the Coast Guard and Maritime Transportation Act of 2006, Public Law 109–241, July 11, 2006, 120 Stat. 516 (DRPA). Section 603(a) of DRPA amended the OPA 90 limits of liability for vessels at 33 U.S.C. 2704(a).

The following table shows the OPA 90 limits of liability in effect before DRPA, and the new limits of liability under OPA 90 as amended by DRPA Section 603(a), by vessel type:

CHANGES TO OPA 90 VESSEL LIMITS OF LIABILITY [2]

| If the vessel is a | The original limit of liability limit was the greater of— | The amended limit of liability is the greater of— |
|---|---|---|
| Tank vessel greater than 3,000 gross tons with a single hull, with double sides only, or with a double bottom only. | $1,200 per gross ton or $10,000,000 | $3,000 per gross ton or $22,000,000. |
| Tank vessel less than or equal to 3,000 gross tons with a single hull, with double sides only, or with a double bottom only. | $1,200 per gross ton or $2,000,000 | $3,000 per gross ton or $6,000,000. |
| Tank vessel greater than 3,000 gross tons with a double hull. | $1,200 per gross ton or $10,000,000 | $1,900 per gross ton or $16,000,000. |
| Tank vessel less than or equal to 3,000 gross tons with a double hull. | $1,200 per gross ton or $2,000,000 | $1,900 per gross ton or $4,000,000. |
| Any vessel other than a tank vessel | $600 per gross ton or $500,000 | $950 per gross ton or $800,000. |

[2] Sources: 33 U.S.C. 2704(a) immediately prior to amendment by DRPA, and 33 U.S.C. 2704(a) as amended by DRPA Section 603(a). Although the original and current versions of 33 U.S.C. 2704(a) both distinguish between vessels on the basis of their gross tonnage and whether they are tank vessels, 33 U.S.C. 2704(a) as amended by DRPA Section 603(a) now also distinguishes between single-hulled and double-hulled tank vessels.

On August 18, 2006, before initiating this rulemaking, we published a Notice of Policy in the **Federal Register** (71 FR 47737, see, Regulatory History) explaining:

- That the OPA 90 limits of liability for vessels were changed by DRPA effective July 11, 2006 for non-tank vessels, and effective October 9, 2006 for tank vessels;
- The amounts of the new OPA 90 vessel limits of liability;
- That the OPA 90 proof of financial responsibility (applicable amount) requirements for vessels at 33 CFR part 138 would stay at the applicable amount levels in effect prior to the DRPA amendments until changed by rulemaking; and
- That a rulemaking project would be initiated to require vessel owners and operators to provide evidence of financial responsibility applicable amounts under 33 CFR part 138 to the amended OPA 90 limits of liability.

*Scope of the Rule*

This rulemaking was initiated, as contemplated in the Notice of Policy, to ensure that the owners and operators (including demise charterers, hereafter referred to jointly as the operators) of any vessel required to have a certificate of financial responsibility under 33 U.S.C. 2716, demonstrate that they are

[1] See, *Oil Pollution Desk Book,* Environmental Law Institute 1991, hereinafter OPA 90 Desk Book, p. 88, H.R. Conf. Report 101–653, at p. 102, reprinted in 1990 U.S.C.C.A.N. 779, 780 [''The term 'liable' or 'liability' * * * is to be construed to be the standard of liability * * * under section 311 of the [Federal Water Pollution Control Act, 33 U.S.C. 1321] * * *. That standard of liability has been determined repeatedly to be strict, joint and several liability.'']; OPA 90 Desk Book p. 93, H.R. Conf. Report 101–653, at 118, 1990 U.S.C.C.A.N., at 797 (Aug. 3, 1990) [''[T]he primary responsibility to compensate victims of oil pollution rests with the person responsible for the source of the pollution[.]'']

financially able to meet their potential liability under OPA 90, 33 U.S.C. 2704, under the new limits of liability as amended by DRPA, in the event of an incident where an OPA 90 limit of liability applies. The rulemaking amends 33 CFR part 138 to ensure consistency between the OPA 90 vessel evidence of financial responsibility applicable amounts at § 138.80(f)(1) and the OPA 90 vessel limits of liability as amended by DRPA.[3]

This rulemaking also establishes the framework for ensuring consistency when regulatory changes to the OPA 90 limits of liability for vessels and deepwater ports are promulgated in the future under 33 U.S.C. 2704(d).

Specifically, the rulemaking divides part 138 of Title 33 CFR into two subparts. The vessel financial responsibility requirements, former 33 CFR part 138, as amended by this rulemaking now appears under 33 CFR part 138, new subpart A. In addition, a new subpart has been created, at 33 CFR part 138, subpart B, to set forth the OPA 90 limits of liability for vessels and deepwater ports, and reserving paragraphs for other oil spill source categories that are regulated by the Coast Guard. Last, rather than specifically enumerating the OPA 90 financial responsibility applicable amounts for vessels in § 138.80(f)(1), that section now cross-references to the OPA 90 limits of liability for vessels as amended by DRPA or hereafter by regulation, as set forth in new subpart B. This change ensures that the OPA 90 financial responsibility applicable amounts that must be proven by vessel operators, under 33 CFR part 138, subpart A, will always be consistent with the OPA 90 limits of liability set forth in 33 CFR part 138, subpart B.

This rulemaking also eliminates the requirement in former § 138.65 that an original Certificate of Financial Responsibility (Certificate or COFR), or an authorized copy thereof, be carried aboard covered vessels. Improved technology now enables the Coast Guard to view vessel COFRs electronically, which is more cost effective than tasking inspectors to view a paper Certificate on board each vessel.

In addition, the rule increases the COFR application and certification fees found in § 138.130. The prior fee amounts were established in 1994 in the interim rule entitled ''Financial Responsibility for Water Pollution (Vessels)'' (59 FR 34210), and the amounts had not been increased since that time. The new fee amounts established by this rulemaking approximate the fluctuations to the Consumer Price Index occurring as a result of inflation since 1994.

Finally, this rulemaking revises the definition of ''owner'' in § 138.20 to reflect amendments to OPA 90 by the Coast Guard and Maritime Transportation Act of 2004, Public Law 108–293, August 9, 2004, 118 Stat. 1045.

## IV. Discussion of Comments and Changes

We received seven letters raising 13 issues during the public comment period for the proposed rule (73 FR 6642 and 73 FR 8250), and one additional letter raising one issue after the public comment period closed on May 5, 2008. The letters we received during the public comment period were from a private citizen, three COFR guarantors, a proposed liquid natural gas (LNG) deepwater port developer, a State environmental agency, and an association of oil spill regulatory agencies from Alaska, British Columbia, Washington, Oregon, Hawaii and California. The letter received after the public comment period closed was from an offshore drilling association. The following discussion summarizes the public comments we received and our responses to the comments.

One commenter was concerned with an oil spill off the coast of New Jersey more than one year ago where the responsible party was never identified, and proposed that, to improve security and prevent pollution, the U.S. have information on every ship carrying any cargo that enters any U.S. waters at any time. This rulemaking only addresses the requirements under 33 U.S.C. 2716 for vessels to provide evidence of financial responsibility. The comment is therefore beyond the scope of this rulemaking, and no change has been made in the final rule in response to this comment. The Coast Guard, however, agrees that maritime domain awareness is important to our national security and efforts to reduce pollution, and is taking steps to improve vessel tracking systems.

The same commenter proposed that the Coast Guard establish a requirement for vessels to post a five million dollar bond to pay for any damage in the event of an oil spill incident. This comment is beyond the scope of this rulemaking. OPA 90 does not authorize the Coast Guard to impose a bonding requirement on vessels including cargo vessels. Therefore, no change has been made to the final rule in response to this comment. OPA 90 does, however, establish limits of liability at 33 U.S.C. 2704(a), applicable to all vessels. Those limits are generally more than five million dollars for tank vessels, and for most large ocean-going vessels. Furthermore, at 33 U.S.C. 2716 and in these regulations, OPA 90 requires that all vessels—including cargo vessels—over 300 gross tons establish and maintain evidence of financial responsibility sufficient to meet the maximum amount of liability to which the responsible party could be subjected under 33 U.S.C. 2704(a).

Two commenters recommended adding the following proviso at the end of the first sentence of § 138.80(d)(2) *Limitation on guarantor liability:* '', provided that the guarantor was immediately notified as required by 33 U.S.C. 2714 and given the same opportunity to respond to an incident or a release or threatened release, as that given to the responsible party.'' This comment is beyond the scope of this rulemaking. This rulemaking only addresses the requirements under 33 U.S.C. 2716 for vessels to provide evidence of financial responsibility. The provisions of OPA 90 concerning designation of sources, and notification of responsible parties and guarantors, are set forth in 33 U.S.C. 2714(a), and are detailed further in regulations at 33 CFR part 136, subpart D (33 CFR 136.305(a)).

Furthermore, there is no provision in 33 U.S.C. 2714(a) or elsewhere in OPA 90 that limits a guarantor's liability for removal costs and damages in the event the government does not notify the responsible party or guarantor of a source designation. A failure to notify only affects the responsible party's and guarantor's obligations concerning advertisement to potential claimants, under 33 U.S.C. 2714(b) and implementing regulations at 33 CFR part 136. The Coast Guard therefore disagrees with the proposed change to § 138.80(d).

One commenter recommended changing the reference to the Louisiana Offshore Oil Port (LOOP) in § 138.220(b), to encompass any limit of liability established under 33 U.S.C. 2704(d)(2)(A)–(C). We agree that the wording in the proposed regulatory text was unnecessarily narrow and have amended § 138.220(b) accordingly.

One commenter asked that § 130.220(b) be expanded to describe the nature of any studies that might be required of deepwater port license applicants or license holders and the specific administrative process to be followed under 33 U.S.C. 2704(d)(2) for seeking adjustments to the limits of liability for deepwater ports under 33

[3] This rulemaking does not change the limits of liability or applicable amount provisions for vessels under CERCLA at 42 U.S.C. 9607(c), 42 U.S.C. 9608(a), and § 138.80(f)(2).

U.S.C. 2704(a). This comment concerns issues that go beyond the scope of this rulemaking. This rulemaking identifies the existing limits of liability for vessels and deepwater ports, but it does not adjust any limits of liability. Nor does it concern the studies and other criteria under 33 U.S.C. 2704(d) for adjusting the limits. Instead, it primarily concerns the evidence of financial responsibility requirements applicable to vessels under 33 U.S.C. 2716.

One commenter asked several questions concerning how the Coast Guard determines a vessel's category for purposes of implementation of the COFR rule. First, the commenter wanted to know what documents will serve as a reference point for the Coast Guard to determine whether a vessel has a single or double hull, and whether the Coast Guard would use a classification society survey or some other official document that is generally accepted as an accurate record of the hull construction. The same commenter asked what document will be used by the Coast Guard as the reference point for classifying a vessel in circumstances where a vessel has changed type (e.g., from a Very-large Crude Carrier tanker to a dry cargo vessel).

The Coast Guard may confirm vessel details provided in the application for a certificate of financial responsibility, including any guarantee schedule, by referring to certificates of inspection and other normally available information sources such as Class Society surveys, Lloyds List, and Protection & Indemnity Club information. We have clarified the rule in response to these questions, consistent with legislative intent, by replacing the words ''other than a vessel referred to in § 138.220(a)(1),'' in § 138.220(a)(2) and (4), with the term ''double hull'', and by adding at the end of § 138.220(a) that the term ''double hull'' has the meaning used in 33 CFR part 157 and that the term ''single hull'' means any hull that is not a ''double hull''. (See, 152 Cong. Rec. H1640, H1663).

The commenter also asked how the Coast Guard intends to enforce the imminent phase-out of single-hull tank vessels? Specifically, the commenter asked, in a hypothetical instance where a single-hull tank vessel owner misstates in an application for a guaranty that the vessel is double hulled: How would the Coast Guard determine that the vessel should not enter the U.S. Exclusive Economic Zone? What would the consequence be to the vessel owner? Would there be any consequence for the guarantor? Enforcement of the phase-out of single-hull tankers is outside the scope of this rulemaking. Furthermore, the consequences of any illegal vessel entry would depend in part on the circumstances of the entry and the applicable law(s). No change is made to the rule in response to these questions.

Two commenters noted that the rulemaking did not increase the OPA 90 limits of liability, under 33 U.S.C. 2704(d), to reflect significant increases in the Consumer Price Index. One of the commenters noted that the notice of proposed rulemaking did not increase the limits of liability for facilities under the Coast Guard's jurisdiction for inflation. The same commenter also stated that ''the proposed increases for vessels, including tank barges, is at the 2006 DRPA level only: No [Consumer Price Index] increases since 2006 are reflected in the proposed rule[,]'' and noted that DRPA also amended the provision 33 U.S.C. 2704(d) authorizing increases to limits of liability based on the Consumer Price Index.

The other commenter stated that ''the limits of liability for non-tank vessels should be increased''. The same commenter stated that the ''proposed rulemaking fails to address the issue of limits of liability for oil handling facilities'', and erroneously characterized the NPRM as proposing to change the limits of liability for vessels ''based on the consumer price index''.

These commenters misunderstand the scope of this rulemaking. This rulemaking does not adjust the OPA 90 limits of liability for any source category. Nor does this rulemaking adjust any limits of liability for inflation. This rulemaking is primarily intended to conform the OPA 90 financial responsibility ''applicable amounts'' for vessels under 33 U.S.C. 2716 (at 33 CFR part 138, subpart A, § 138.80(f)), to the limits of liability for vessels under OPA 90 as amended by DRPA.

Although the rulemaking establishes a new subpart B setting forth the OPA 90 limits of liability for vessels and deepwater ports, and establishes the framework for future regulatory changes to the OPA 90 limits of liability, including adjustments for inflation, the primary purpose of this rulemaking is to ensure consistency between the OPA 90 vessel financial responsibility applicable amounts at § 138.80(f) and the OPA 90 limits of liability now in effect and as may hereafter be amended by regulation. Consumer Price Index increases to the OPA 90 limits of liability for Coast Guard delegated source categories, including oil handling facilities, other facilities, tank barges and other vessels, will be promulgated by regulation, in accordance with 33 U.S.C. 2704(d), in separate rulemakings.

To eliminate some of the confusion concerning the scope of this rulemaking, we have eliminated the reference to the Consumer Price Index that appeared in proposed § 138.200. We also have edited the regulatory text of § 138.85 to clarify the distinction between the effective date of this rule and the date by which operators must establish evidence of financial responsibility in an amount equal to or greater than the new applicable amounts. Finally we have amended subpart B for clarity and to reserve space for future regulatory adjustments to the limits of liability under 33 U.S.C. 2704(d), including adjustments to reflect significant increases in the Consumer Price Index.

One commenter commented favorably that the rulemaking would ''eliminate the requirement for vessel operators to maintain their certificates of financial responsibility (COFR) on board ships. We support this direction towards electronic certification. We currently use the USCG online database for vessel contingency plans. In addition the addition of the online COFR database will prove to be beneficial for cross-agency partnership work.'' No changes have been made to the rule in response to this comment.

One commenter, who submitted a comment after the close of the public comment period, asked for a supplemental rulemaking to treat all mobile offshore drilling units (MODUs) as double hull tank vessels for purposes of the financial responsibility requirements of 33 CFR part 138, subpart A. OPA 90 at 33 U.S.C. 2716(a) requires that evidence of financial responsibility be provided up to the applicable limits of liability. OPA 90 at 33 U.S.C. 2704(b), in turn, provides that when a MODU is used as an offshore facility it is generally treated as a tank vessel for purposes of OPA 90. There, however, is no provision in OPA 90 authorizing treatment of single-hulled MODUs when used as offshore facilities as double-hulled tank vessels for purposes of determining the applicable limit of liability or the financial responsibility requirements. The Coast Guard therefore will not initiate a supplemental rulemaking in response to this comment.

## V. Regulatory Analyses

We developed this rule after considering numerous statutes and executive orders related to rulemaking. Below we summarize our analyses based on 13 of these statutes or executive orders.

*A. Regulatory Planning and Review*

This rule is not a significant regulatory action under section 3(f) of Executive Order 12866, Regulatory Planning and Review, and does not require an assessment of potential costs and benefits under section 6(a)(3) of that Order. The Office of Management and Budget has not reviewed it under that Order. A final Regulatory Assessment is available in the docket as indicated under **ADDRESSES**. A summary of the Regulatory Assessment follows:

On February 5, 2008, an NPRM was published (73 FR 6642) which included a supplemental Preliminary Regulatory Assessment of the costs and benefits of the proposed rule. The comment period ended on May 5, 2008. No comments were received on the Preliminary Regulatory Assessment. Prior to developing the Final Regulatory Assessment, we confirmed that the data contained in the Preliminary Regulatory Assessment had not changed.

There are two regulatory costs of this rule:

*Regulatory Cost 1:* The rule increases the cost to responsible parties associated with application for and certification of COFRs. This rule increases the cost per application from $150 to $200 and the cost per certification from $80 to $100. We estimate that there will be 1,600 COFR application fees submitted per year and 8,600 COFR certification fees submitted per year for the foreseeable future. The aggregated annual increase in cost due to these fee increases is approximately $252,000 per year.

*Regulatory Cost 2:* The rule increases the cost associated with establishing financial responsibility under 33 CFR part 138. This occurs in two ways: Responsible parties using commercial insurance as their method of guaranty will incur higher insurance premiums; and, responsible parties using self-insurance as their method of guaranty will need to seek out and acquire commercial insurance for vessels they operate that are no longer eligible for self-insurance based on their working capital and net worth.

There are approximately 16,982 vessels using commercial insurance and 823 vessels using self insurance methods of guaranty. The 10-year present value of this regulatory cost at a 3 percent discount rate is between $73.8 million and $83.4 million. The 10-year present value of this regulatory cost at a 7 percent discount rate is between $63.3 million and $71.9 million. The ranges reflect two vessel profiles that were developed and analyzed separately to account for the uncertainty, due to data gaps, of when existing single-hulled tank vessels will be phased out.

The 10-year present value of the total cost of the rule (Regulatory Cost 1 + Regulatory Cost 2) at a 3 percent discount rate is between $76 million and $85.6 million. The 10-year present value of the total cost of the rule (Regulatory Cost 1 + Regulatory Cost 2) at a 7 percent discount rate is between $65.2 million and $73.8 million.

There are two regulatory benefits of this rule: First, the rule aligns the financial responsibility amounts for vessels in 33 CFR part 138 in subpart A with the amended statutory limits of liability under OPA 90, as specified in 33 U.S.C. 2704. This ensures the ability of responsible parties to meet their maximum liability limit under OPA 90 in the event of an incident. Second, the rule eliminates the burden on owners and operators of maintaining COFRs onboard vessels.

*B. Small Entities*

Under the Regulatory Flexibility Act (5 U.S.C. 601–612), we have considered whether this rule would have a significant economic impact on a substantial number of small entities. The term ''small entities'' comprises small businesses, not-for-profit organizations that are independently owned and operated and are not dominant in their fields, and governmental jurisdictions with populations of less than 50,000.

A Final Regulatory Flexibility Analysis (FRFA) discussing the impact of this rule on small entities is available in the docket where indicated under the **ADDRESSES** section of this preamble.

The NPRM for this rulemaking published on February 5, 2008 (73 FR 6642) included an Initial Regulatory Flexibility Analysis (IRFA) which quantified the economic impacts to small entities of the proposed rule. The comment period ended on May 5, 2008. No comments were received on either the IRFA or with respect to any aspects of the NPRM that might concern small entities. Prior to developing the FRFA, we confirmed that the data contained in the IRFA had not changed.

In our analysis, we researched vessel operator size and revenue data using public and proprietary business databases. We then determined which entities were small based on the U.S. Small Business Administration's criteria as they pertain to business size standards for all sectors of the North American Industry Classification System (NAICS).

There are an estimated 600 small entities affected by this rule. We found that 82 distinct NAICS codes are represented in the population of small entities (of which 32 contained more than 5 entities). The available data indicate that: increases in insurance premiums will result in an average annual cost of $523 per vessel, increases in self-insurer costs will result in an average annual cost of $7,200 per vessel, and increases in COFR application fees will result in an average annual cost of $12 per vessel.

The data further indicate that, of the small entities impacted, 92 percent will experience an annual economic impact that is less than 1 percent of their annual sales. Furthermore, 98 percent of the small entities will experience an economic impact less than 3 percent of their total sales. Two percent will experience an annual economic impact that is equal to or greater than 3 percent of their annual sales and none will experience an annual economic annual impact greater than 10 percent of their annual sales. Based on this analysis, we believe that implementation of this rule would not have a significant economic impact on a substantial number of small entities under 5 U.S.C. 605(b). Therefore, the Coast Guard certifies under 5 U.S.C. 605(b) that this final rule will not have a significant economic impact on a substantial number of small entities.

*C. Assistance for Small Entities*

Under section 213(a) of the Small Business Regulatory Enforcement Fairness Act of 1996 (Pub. L. 104–121), we offered in the NPRM to assist small entities in understanding the rule so that they could better evaluate its effects on them and participate in the rulemaking. No assistance was requested from small entities.

Small businesses may send comments on the actions of Federal employees who enforce, or otherwise determine compliance with, Federal regulations to the Small Business and Agriculture Regulatory Enforcement Ombudsman and the Regional Small Business Regulatory Fairness Boards. The Ombudsman evaluates these actions annually and rates each agency's responsiveness to small business. If you wish to comment on actions by employees of the Coast Guard, call 1–888–REG–FAIR (1–888–734–3247).

*D. Collection of Information*

This rule calls for a new collection of information under the Paperwork Reduction Act of 1995 (44 U.S.C. 3501–3520). As defined in 5 CFR 1320.3(c), ''collection of information'' comprises reporting, recordkeeping, monitoring, posting, labeling, and other, similar actions. The title and description of the

information collections, a description of those who must collect the information, and an estimate of the total annual burden follow. The estimate covers the time for reviewing instructions, searching existing sources of data, gathering and maintaining the data needed, and completing and reviewing the collection.

*Title:* Financial Responsibility for Water Pollution (Vessels) and Limits of Liability.

*Summary of the Collection of Information:* Not later than 90 days after the effective date of this regulation, operators are required to establish evidence of financial responsibility to the amended applicable amounts in § 138.80(f).

This rule eliminates the existing recordkeeping burden associated with 33 CFR part 138, and revises the current information collection entitled, *Financial Responsibility for Water Pollution (Vessels)* (Office of Management and Budget control number 1625–0046, approved December 7, 2006).

*Need for Information:* This information collection is necessary to enforce this rule. Without this collection, it would not be possible for the Coast Guard to know which operators were in compliance with the amended financial responsibility applicable amounts determined under § 138.80(f), and which were not. Vessels not in compliance will be subject to the penalties provided under § 138.140.

*Use of Information:* The Coast Guard will use this information to verify that vessel operators have established evidence of financial responsibility to reflect the amended financial responsibility applicable amounts determined under § 138.80(f).

*Description of the Respondents:* Operators, as this term is defined in 33 CFR part 138, subpart A, and guarantors of vessels that require COFRs under 33 CFR part 138, Subpart A.

*Number of Respondents:* There are approximately 900 United States operators, 9,000 foreign operators and 100 guarantors of vessels that will submit information to the Coast Guard.

*Frequency of Response:* This is a one-time submission occurring not later than 90 days after the effective date of this regulation. Subsequent submissions that may be required as a result of regulatory changes to limits of liability under 33 U.S.C. 2704(d) are not included here because they will be addressed in future rulemakings.

*Burden of Response:*

*Increased burden associated with reporting requirements:* 10,000 respondents × 1.0 hours per response = 10,000 hours.

*Reduced burden associated with recordkeeping requirements:* 9,900 respondents × 0.0138 hours/respondent = 137 hours.

*Estimate of Total Annual Burden:* We used the ''All Occupations'' average hourly wage of $18.21 per hour, found in the May 2005 *National Occupational Employment and Wage Estimates United States,* published by the Department of Labor's Bureau of Labor Statistics, and applied a 43 percent overhead factor to estimate employee benefits to calculate the burdened labor rate. Bureau of Labor Statistics data show that total employee benefits is approximately 30 percent of total compensation. By applying a benefit factor of 43 percent to the hourly wage, we calculated total compensation: $18.21 per hour + ($18.21 per hour × 43 percent) = $26 per hour.

We then multiplied the number of net burden hours by the burdened labor rate calculated above.

*Increased burden associated with reporting requirements:* 10,000 hours × $26 per hour = $260,000.

*Reduced burden associated with recordkeeping requirements:* 137 hours × $26 per hour = $3,562.

As required by 44 U.S.C. 3507(d), we submitted a copy of the proposed rule to the Office of Management and Budget (OMB) for its review of the collection of information. OMB has yet to complete its review of this collection. Therefore, § 138.85 may not be enforced until this collection is approved by OMB. We will publish notice in the **Federal Register** of OMB's decision to approve, modify, or disapprove the collection.

You are not required to respond to a collection of information unless it displays a currently valid OMB control number.

*E. Federalism*

A rule has implications for federalism under Executive Order 13132, Federalism, if it has a substantial direct effect on State or local governments and would either preempt State law or impose a substantial direct cost of compliance on them. We have analyzed this rule under that Order and have determined that it does not have implications for federalism.

*F. Unfunded Mandates Reform Act*

The Unfunded Mandates Reform Act of 1995 (2 U.S.C. 1531–1538) requires Federal agencies to assess the effects of their discretionary regulatory actions. In particular, the Act addresses actions that may result in the expenditure by a State, local, or tribal government, in the aggregate, or by the private sector of $100,000,000 or more in any one year. Though this rule will not result in such an expenditure, we do discuss the effects of this rule elsewhere in this preamble.

*G. Taking of Private Property*

This rule will not effect a taking of private property or otherwise have taking implications under Executive Order 12630, Governmental Actions and Interference with Constitutionally Protected Property Rights.

*H. Civil Justice Reform*

This rule meets applicable standards in sections 3(a) and 3(b)(2) of Executive Order 12988, Civil Justice Reform, to minimize litigation, eliminate ambiguity, and reduce burden.

*I. Protection of Children*

We have analyzed this rule under Executive Order 13045, Protection of Children from Environmental Health Risks and Safety Risks. This rule is not an economically significant rule and does not create an environmental risk to health or risk to safety that may disproportionately affect children.

*J. Indian Tribal Governments*

This rule does not have tribal implications under Executive Order 13175, Consultation and Coordination with Indian Tribal Governments, because it does not have a substantial direct effect on one or more Indian tribes, on the relationship between the Federal Government and Indian tribes, or on the distribution of power and responsibilities between the Federal Government and Indian tribes.

*K. Energy Effects*

We have analyzed this rule under Executive Order 13211, Actions Concerning Regulations That Significantly Affect Energy Supply, Distribution, or Use. We have determined that it is not a ''significant energy action'' under that order because it is not a ''significant regulatory action'' under Executive Order 12866 and is not likely to have a significant adverse effect on the supply, distribution, or use of energy.

*L. Technical Standards*

The National Technology Transfer and Advancement Act (NTTAA) (15 U.S.C. 272 note) directs agencies to use voluntary consensus standards in their regulatory activities unless the agency provides Congress, through the Office of Management and Budget, with an explanation of why using these standards would be inconsistent with

applicable law or otherwise impractical. Voluntary consensus standards are technical standards (*e.g.*, specifications of materials, performance, design, or operation; test methods; sampling procedures; and related management systems practices) that are developed or adopted by voluntary consensus standards bodies.

This rule does not use technical standards. Therefore, we did not consider the use of voluntary consensus standards.

*M. Environment*

We have analyzed this rule under Commandant Instruction M16475.lD and Department of Homeland Security Management Directive 5100.1, which guide the Coast Guard in complying with the National Environmental Policy Act of 1969 (NEPA) (42 U.S.C. 4321–4370f), and have concluded that there are no factors in this case that would limit the use of a categorical exclusion under section 2.B.2 of the Instruction. Therefore, this rule is categorically excluded, under figure 2–1, paragraph (34)(a), of the Instruction, from further environmental documentation. This rulemaking only addresses the requirements under 33 U.S.C. 2716 for vessels to provide evidence of financial responsibility. It has no effect on the environment. A final environmental analysis checklist and a final categorical exclusion determination are available in the docket where indicated under **ADDRESSES**.

**List of Subjects in 33 CFR Part 138**

Hazardous materials transportation, Insurance, Oil pollution, Reporting and recordkeeping requirements, Water pollution control.

■ For the reasons discussed in the preamble, the Coast Guard revises 33 CFR part 138 as follows:

## PART 138—FINANCIAL RESPONSIBILITY FOR WATER POLLUTION (VESSELS) AND OPA 90 LIMITS OF LIABILITY (VESSELS AND DEEPWATER PORTS)

### Subpart A—Financial Responsibility for Water Pollution (Vessels)

Sec.
138.10 Scope.
138.15 Applicability.
138.20 Definitions.
138.30 General.
138.40 Forms.
138.45 Where to apply for and renew Certificates.
138.50 Time to apply.
138.60 Applications, general instructions.
138.65 Issuance of Certificates.
138.70 Renewal of Certificates.
138.80 Financial responsibility, how established.
138.85 Implementation schedule for amendments to applicable amounts by regulation.
138.90 Individual and Fleet Certificates.
138.100 Non-owning operator's responsibility for identification.
138.110 Master Certificates.
138.120 Certificates, denial or revocation.
138.130 Fees.
138.140 Enforcement.
138.150 Service of process.

### Subpart B—OPA 90 Limits of Liability (Vessels and Deepwater Ports)

138.200 Scope.
138.210 Applicability.
138.220 Limits of liability.

**Authority:** 33 U.S.C. 2716, 2716a; 42 U.S.C. 9608, 9609; Sec. 1512 of the Homeland Security Act of 2002, Pub. L. 107–296 , Title XV, Nov. 25, 2002, 116 Stat. 2310 (6 U.S.C. 552); E.O. 12580, Sec. 7(b), 3 CFR, 1987 Comp., p. 198; E.O. 12777, 3 CFR, 1991 Comp., p. 351; E.O. 13286, Sec. 89 (68 FR 10619, Feb. 28, 2003); Department of Homeland Security Delegation Nos. 0170.1 and 5110. Section 138.30 also issued under the authority of 46 U.S.C. 2103, 46 U.S.C. 14302.

### Subpart A—Financial Responsibility for Water Pollution (Vessels)

#### § 138.10 Scope.

This subpart sets forth the procedures by which an operator of a vessel must establish and maintain, for itself and for the owners and demise charterers of the vessel, evidence of financial responsibility required by Section 1016(a) of the Oil Pollution Act of 1990, as amended (OPA 90) (33 U.S.C. 2716), and Section 108 of the Comprehensive Environmental Response, Compensation, and Liability Act of 1980, as amended (CERCLA) (42 U.S.C. 9608), equal to the total applicable amount determined under this subpart and sufficient to cover their liability arising under—

(a) Sections 1002 and 1004 of OPA 90 (33 U.S.C. 2702, 2704); and

(b) Section 107 of CERCLA (42 U.S.C. 9607).

#### § 138.15 Applicability.

(a) This subpart applies to the operator as defined herein of —

(1) A tank vessel of any size, and a foreign-flag vessel of any size, using the waters of the exclusive economic zone to transship or lighter oil (whether delivering or receiving) destined for a place subject to the jurisdiction of the United States; and

(2) Any vessel using the navigable waters of the United States or any port or other place subject to the jurisdiction of the United States, including a vessel using an offshore facility subject to the jurisdiction of the United States, except—

(i) A vessel that is 300 gross tons or less; or

(ii) A non-self-propelled barge that does not carry oil as cargo or fuel and does not carry hazardous substances as cargo.

(b) For the purposes of financial responsibility under OPA 90, a mobile offshore drilling unit is treated as a tank vessel when it is being used as an offshore facility and there is a discharge, or a substantial threat of a discharge, of oil on or above the surface of the water. A mobile offshore drilling unit is treated as a vessel other than a tank vessel when it is not being used as an offshore facility.

(c) In addition to a non-self-propelled barge over 300 gross tons that carries hazardous substances as cargo, for the purposes of financial responsibility under CERCLA, this subpart applies to a self-propelled vessel over 300 gross tons, even if it does not carry hazardous substances.

(d) This subpart does not apply to operators of public vessels.

#### § 138.20 Definitions.

(a) As used in this subpart, the following terms have the meaning as set forth in—

(1) Section 1001 of the Oil Pollution Act of 1990 (33 U.S.C. 2701), respecting the financial responsibility referred to in § 138.10(a): *claim, claimant, damages, discharge, exclusive economic zone, liable, liability, navigable waters, mobile offshore drilling unit, natural resources, offshore facility, oil, owner or operator, person, remove, removal, removal costs, security interest,* and *United States;* and

(2) Section 101 of the Comprehensive Environmental Response, Compensation, and Liability Act (42 U.S.C. 9601), respecting the financial responsibility referred to in § 138.10(b): *claim, claimant, damages, environment, hazardous substance, liable, liability, navigable waters, natural resources, offshore facility, owner or operator, person, release, remove, removal, security interest,* and *United States.*

(b) As used in this subpart —

*Acts* means OPA 90 and CERCLA.

*Applicable amount* means an amount of financial responsibility that must be demonstrated under this subpart, determined under § 138.80(f)(1) for OPA 90 or § 138.80(f)(2) for CERCLA.

*Applicant* means an operator who has applied for a Certificate or for the renewal of a Certificate under this subpart.

*Application* means an Application for Vessel Certificate of Financial Responsibility (Water Pollution) (Form CG–5585), which can be obtained from the U.S. Coast Guard National Pollution

Funds Center as provided in §§ 138.40 and 138.45.

*Cargo* means goods or materials on board a vessel for purposes of transportation, whether proprietary or nonproprietary. A hazardous substance or oil carried solely for use aboard the carrying vessel is not Cargo.

*CERCLA* means title I of the Comprehensive Environmental Response, Compensation, and Liability Act of 1980, as amended (42 U.S.C. 9601–9675).

*Certificant* means an operator who has a current Certificate issued by the U.S. Coast Guard National Pollution Funds Center (NPFC) under this subpart.

*Certificate* means a Vessel Certificate of Financial Responsibility (Water Pollution) (Form CG–5585) issued by the NPFC under this subpart, as provided in § 138.65.

*Day* or *days* means calendar days. If a deadline specified in this subpart falls on a weekend or Federal holiday, the deadline will occur on the next working day. Compliance with a submission deadline will be determined based on the day the submission is received by NPFC.

*Director, NPFC* means the head of the NPFC.

*E–COFR* means the Electronic Certificate of Financial Responsibility web-based process located on the NPFC Web site (*http://www.npfc.gov/cofr*), which may be used by operators to apply for and renew Certificates.

*Financial guarantor* means a guarantor who provides a financial guaranty under § 138.80(b)(4), and is distinct from an insurer, a self-insurer or a surety.

*Financial responsibility* means the statutorily required financial ability to meet a responsible party's liability under the Acts.

*Fish tender vessel* and *fishing vessel* have the same meaning as set forth in 46 U.S.C. 2101.

*Fuel* means any oil or hazardous substance used or capable of being used to produce heat or power by burning, including power to operate equipment. A hand-carried pump with not more than five gallons of fuel capacity, that is neither integral to nor regularly stored aboard a non-self-propelled barge, is not equipment.

*Guarantor* means any person, other than a responsible party, who provides evidence of financial responsibility under the Acts on behalf of a vessel's responsible parties. A responsible party who can qualify as a self-insurer under § 138.80(b)(3) may act as both a self-insurer of vessels owned, operated or demise chartered by the responsible party, and as a financial guarantor for the responsible parties of other vessels under § 138.80(b)(4).

*Hazardous material* means a liquid material or substance that is—

(1) Flammable or combustible;

(2) A hazardous substance designated under Section 311(b) of the Federal Water Pollution Control Act (33 U.S.C. 1321(b)); or

(3) Designated a hazardous material under the Hazardous Materials Transportation Act, Section 104 (46 U.S.C. 5103(a)) (1994).

*Incident* means any occurrence or series of occurrences having the same origin, involving one or more vessels, facilities, or any combination thereof, resulting in the discharge or substantial threat of discharge of oil into or upon the navigable waters or adjoining shorelines or the exclusive economic zone.

*Insurer* is a type of guarantor and means one or more insurance companies, associations of underwriters, ship owners' protection and indemnity associations, or other persons, each of which must be acceptable to the Director, NPFC.

*Master Certificate* means a Certificate issued under this subpart to a person who is a builder, repairer, scrapper, lessor, or seller of a vessel and is acting as the vessel's operator.

*Offshore supply vessel* has the same meaning as set forth in 46 U.S.C. 2101.

*OPA 90* means the Oil Pollution Act of 1990 (33 U.S.C. 2701, *et seq.*).

*Operator* means a person who is an owner, a demise charterer, or other contractor, who conducts the operation of, or who is responsible for the operation of, a vessel. A builder, repairer, scrapper, lessor, or seller who is responsible, or who agrees by contract to become responsible, for a vessel is an operator. A time or voyage charterer that does not assume responsibility for the operation of a vessel is not an operator for the purposes of this subpart.

*Owner* means any person holding legal or equitable title to a vessel. In a case where a U.S. Coast Guard Certificate of Documentation or equivalent document has been issued, the owner is considered to be the person or persons whose name or names appear thereon as owner. Owner does not include a person who, without participating in the management of a vessel, holds indicia of ownership primarily to protect the owner's security interest in the vessel.

*Public vessel* means a vessel owned or bareboat chartered by the United States, or by a State or political subdivision thereof, or by a foreign nation, except when the vessel is engaged in commerce.

*Responsible party,* for purposes of OPA 90 financial responsibility has the same meaning as defined at 33 U.S.C. 2701(32), and for purposes of CERCLA financial responsibility means any person who is an owner or operator, as defined at 42 U.S.C. 9601(20), including any person chartering a vessel by demise.

*Self-elevating lift vessel* means a vessel with movable legs capable of raising its hull above the surface of the sea and that is an offshore work boat (such as a work barge) that does not engage in drilling operations.

*Tank vessel* means a vessel (other than an offshore supply vessel, a fishing vessel or a fish tender vessel of 750 gross tons or less that transfers fuel without charge to a fishing vessel owned by the same person, or a towing or pushing vessel (tug) simply because it has in its custody a tank barge) that is constructed or adapted to carry, or that carries, oil or liquid hazardous material in bulk as cargo or cargo residue, and that—

(1) Is a vessel of the United States;

(2) Operates on the navigable waters; or

(3) Transfers oil or hazardous material in a place subject to the jurisdiction of the United States.

*Total applicable amount* means the amount determined under § 138.80(f)(3).

*Vessel* means every description of watercraft or other artificial contrivance used, or capable of being used, as a means of transportation on water.

**§ 138.30 General.**

(a) The regulations in this subpart set forth the procedures for an operator of a vessel subject to this subpart to demonstrate that the responsible parties of the vessel are financially able to meet their potential liability for costs and damages in the applicable amounts set forth in this subpart at § 138.80(f). Although the owners, operators, and demise charterers of a vessel are strictly, jointly and severally liable under OPA 90 and CERCLA for the costs and damages resulting from each incident or release or threatened release, together they need only establish and maintain evidence of financial responsibility under this subpart equal to the combined OPA 90 and CERCLA limits of liability arising from a single incident and a single release, or threatened release. Only that portion of the total applicable amount of financial responsibility demonstrated under this subpart with respect to—

(1) OPA 90 is required to be made available by a vessel's responsible parties and guarantors for the costs and damages related to an incident where

there is not also a release or threatened release; and

(2) CERCLA is required to be made available by a vessel's responsible parties and guarantors for the costs and damages related to a release or threatened release where there is not also an incident. A guarantor (or a self-insurer for whom the exceptions to limitations of liability are not applicable), therefore, is not required to apply the entire total applicable amount of financial responsibility demonstrated under this subpart to an incident involving oil alone or a release or threatened release involving a hazardous substance alone.

(b) Where a vessel is operated by its owner or demise charterer, or the owner or demise charterer is responsible for its operation, the owner or demise charterer is considered to be the operator for purposes of this subpart, and must submit the Application and requests for renewal for a Certificate. In all other cases, the vessel operator must submit the Application or requests for renewal.

(c) For a United States-flag vessel, the applicable gross tons or gross tonnage, as referred to in this part, is determined as follows:

(1) For a documented U.S. vessel measured under both 46 U.S.C. Chapters 143 (Convention Measurement) and 145 (Regulatory Measurement). The vessel's regulatory gross tonnage is used to determine whether the vessel exceeds 300 gross tons where that threshold applies under the Acts. If the vessel's regulatory gross tonnage is determined under the Dual Measurement System in 46 CFR part 69, subpart D, the higher gross tonnage is the regulatory gross tonnage for the purposes of determining whether the vessel meets the 300 gross ton threshold. The vessel's gross tonnage as measured under the International Convention on Tonnage Measurement of Ships, 1969 (Convention), is used to determine the vessel's required applicable amounts of financial responsibility, and limit of liability under Section 1004 of OPA 90 (33 U.S.C. 2704), including subpart B of this part, and Section 107 of CERCLA (42 U.S.C. 9607).

(2) For all other United States vessels. The vessel's gross tonnage under 46 CFR part 69 is used for determining the vessel's 300 gross ton threshold, the required applicable amounts of financial responsibility, and limits of liability under Section 1004 of OPA 90 (33 U.S.C. 2704), including subpart B of this part, and Section 107 of CERCLA (42 U.S.C. 9607). If the vessel's gross tonnage is determined under the Dual Measurement System, the higher gross tonnage is used in all determinations.

(d) For a vessel of a foreign country that is a party to the Convention, gross tons or gross tonnage, as referred to in this part, is determined as follows:

(1) For a vessel assigned, or presently required to be assigned, gross tonnage under Annex I of the Convention. The vessel's gross tonnage as measured under Annex I of the Convention is used for determining the 300 gross ton threshold, if applicable, the required applicable amounts of financial responsibility, and limits of liability under Section 1004(a) of OPA 90 (33 U.S.C. 2704), including subpart B of this part, and under Section 107 of CERCLA (42 U.S.C. 9607).

(2) For a vessel not presently required to be assigned gross tonnage under Annex I of the Convention. The highest gross tonnage that appears on the vessel's U.S. Coast Guard Certificate of Documentation or equivalent document and that is acceptable to the Coast Guard under 46 U.S.C. chapter 143 is used for determining the 300 gross ton threshold, if applicable, the required applicable amounts of financial responsibility, and limits of liability under Section 1004 of OPA 90 (33 U.S.C. 2704), including subpart B of this part, and Section 107 of CERCLA (42 U.S.C. 9607). If the vessel has no document, or the gross tonnage appearing on the document is not acceptable under 46 U.S.C. chapter 143, the vessel's gross tonnage is determined by applying the Convention Measurement System under 46 CFR part 69, subpart B, or if applicable, the Simplified Measurement System under 46 CFR part 69, subpart E. The measurement standards applied are subject to applicable international agreements to which the United States Government is a party.

(e) For a vessel of a foreign country that is not a party to the Convention, gross tons or gross tonnage, as referred to in this part, is determined as follows:

(1) For a vessel measured under laws and regulations found by the Commandant to be similar to Annex I of the Convention. The vessel's gross tonnage under the similar laws and regulations is used for determining the 300 gross ton threshold, if applicable, the required applicable amounts of financial responsibility, and limits of liability under Section 1004 of OPA 90 (33 U.S.C. 2704), including subpart B of this part, and Section 107 of CERCLA (42 U.S.C. 9607). The measurement standards applied are subject to applicable international agreements to which the United States Government is a party.

(2) For a vessel not measured under laws and regulations found by the Commandant to be similar to Annex I of the Convention. The vessel's gross tonnage under 46 CFR part 69, subpart B, or, if applicable, subpart E, is used for determining the 300 gross ton threshold, if applicable, the required applicable amount of financial responsibility, and the limits of liability under Section 1004 of OPA 90 (33 U.S.C. 2704), including subpart B of this part, and Section 107 of CERCLA (42 U.S.C. 9607). The measurement standards applied are subject to applicable international agreements to which the United States is a party.

(f) A person who agrees to act as a guarantor or a self-insurer is bound by the vessel's gross tonnage as determined under paragraphs (c), (d), or (e) of this section, regardless of what gross tonnage is specified in an Application or guaranty form submitted under this subpart. Guarantors, however, may limit their liability under a guaranty of financial responsibility to the applicable gross tonnage appearing on a vessel's International Tonnage Certificate or other official, applicable certificate of measurement and will not incur any greater liability with respect to that guaranty, except when the guarantors knew or should have known that the applicable tonnage certificate was incorrect.

### § 138.40 Forms.

All forms referred to in this subpart may be obtained from NPFC by requesting them in writing at the address given in § 138.45(a) or by clicking on the Forms link at the NPFC E–COFR Web site, *http://www.npfc.gov/cofr.*

### § 138.45 Where to apply for and renew Certificates.

(a) An operator must submit all Applications for a Certificate and all requests for renewal of a Certificate, together with all evidence of financial responsibility required under § 138.80 and all fees required under § 138.130, to the NFPC at the following address: U.S. Coast Guard, National Pollution Funds Center (Cv), 4200 Wilson Boulevard, Suite 1000, Arlington, VA 22203–1804, telephone (202) 493–6780, Telefax (202) 493–6781; or electronically using NPFC's E–COFR Web-based process at *http://www.npfc.gov/cofr.*

(b) All requests you have for assistance in completing Applications, requests for renewal and other submissions under this subpart, including telephone inquiries, should be directed to the U.S. Coast Guard

NPFC at the addresses in paragraph (a) of this section.

**§ 138.50 Time to apply.**

(a) A vessel operator who wishes to obtain a Certificate must submit a completed Application form and all required supporting evidence of financial responsibility, and must pay all applicable fees, at least 21 days prior to the date the Certificate is required. The Director, NPFC, may grant an extension of this 21-day deadline upon written request and for good cause shown. An applicant seeking an extension of this deadline must set forth the reasons for the extension request and deliver the request to the Director, NPFC, at least 15 days before the deadline. The Director, NPFC, will not consider a request for an extension of more than 60 days.

(b) The Director, NPFC, generally processes Applications and requests for renewal in the order in which they are received at the NPFC.

**§ 138.60 Applications, general instructions.**

(a) You may obtain an Application for Vessel Certificate of Financial Responsibility (Water Pollution) (Form CG–5585) by following the instructions in §§ 138.40 and 138.45.

(b) Your Application and all supporting documents must be in English, and express all monetary terms in United States dollars.

(c) An authorized official of the applicant must sign the signature page of the Application. The title of the signer must be shown in the space provided on the Application. The operator must submit the original signature page of the Application to NPFC in hard copy.

(d) If the signer is not identified on the Application as an individual (sole proprietor) applicant, a partner in a partnership applicant, or a director, chief executive officer, or any other duly authorized officer of a corporate applicant, the Application must be accompanied by a written statement certifying the signer's authority to sign on behalf of the applicant.

(e) If, before the issuance of a Certificate, the applicant becomes aware of a change in any of the facts contained in the Application or supporting documentation, the applicant must, within 5 business days of becoming aware of the change, notify the Director, NPFC, in writing, of the changed facts.

**§ 138.65 Issuance of Certificates.**

Upon the satisfactory demonstration of financial responsibility and payment of all fees due, the Director, NPFC, will issue a Vessel Certificate of Financial Responsibility (Water Pollution) (Form CG–5585) in electronic form. Copies of the Certificate may be downloaded from NPFC's E–COFR Web site.

**§ 138.70 Renewal of Certificates.**

(a) The operator of a vessel required to have a Certificate under this subpart must submit a written or E–COFR request for renewal of the Certificate to the NPFC at least 21 days, but not earlier than 90 days, before the expiration date of the Certificate. A letter may be used for this purpose. The request for renewal must comply in all other respects with the requirements in § 138.60 concerning Applications. The Director, NPFC, may waive this 21-day requirement for good cause shown.

(b) The operator must identify in the request for renewal any changes which have occurred since the original Application for a Certificate was filed, and must set forth the correct information in full.

**§ 138.80 Financial responsibility, how established.**

(a) General. In addition to submitting an Application, requests for renewal, and fees, an applicant must file, or cause to be filed, with the Director, NPFC, evidence of financial responsibility acceptable to the Director, NPFC, in an amount equal to the total applicable amount determined under § 138.80(f)(3). A guarantor may file the evidence of financial responsibility on behalf of the applicant directly with the Director, NPFC.

(b) Methods. An applicant or certificant must establish and maintain evidence of financial responsibility by one or more of the following methods:

(1) Insurance. By filing with the Director, NPFC, an Insurance Guaranty (Form CG–5586) or, when applying for a Master Certificate under § 138.110, a Master Insurance Guaranty (Form CG–5586–1), executed by not more than four insurers that have been found acceptable by, and remain acceptable to, the Director, NPFC, for purposes of this subpart.

(2) Surety bond. By filing with the Director, NPFC, a Surety Bond Guaranty (Form CG–5586–2), executed by not more than 10 acceptable surety companies certified by the United States Department of the Treasury with respect to the issuance of Federal bonds in the maximum penal sum of each bond to be issued under this subpart.

(3) Self-insurance. By filing with the Director, NPFC, the financial statements specified in paragraph (b)(3)(i) of this section for the applicant's fiscal year preceding the date of Application and by demonstrating that the applicant or certificant maintains, in the United States, working capital and net worth each in amounts equal to or greater than the total applicable amount determined under § 138.80(f)(3), based on a vessel carrying hazardous substances as cargo. As used in this paragraph, working capital means the amount of current assets located in the United States, less all current liabilities anywhere in the world; and net worth means the amount of all assets located in the United States, less all liabilities anywhere in the world. For each fiscal year after the initial filing, the applicant or certificant must also submit statements as follows:

(i) Initial and annual filings. An applicant or certificant must submit annual, current, and audited non-consolidated financial statements prepared in accordance with Generally Accepted Accounting Principles, and audited by an independent Certified Public Accountant in accordance with Generally Accepted Auditing Standards. These financial statements must be accompanied by an additional statement from the Treasurer (or equivalent official) of the applicant or certificant certifying both the amount of current assets and the amount of total assets included in the accompanying balance sheet, which are located in the United States. If the financial statements cannot be submitted in non-consolidated form, a consolidated statement may be submitted if accompanied by an additional statement prepared by the same Certified Public Accountant, verifying the amount by which the applicant's or certificant's—

(A) Total assets located in the United States exceed its total (i.e., worldwide) liabilities; and

(B) Current assets located in the United States exceed its total (i.e., worldwide) current liabilities. This additional Certified Public Accountant statement must specifically name the applicant or certificant, indicate that the amounts so verified relate only to the applicant or certificant, apart from any other affiliated entity, and identify the consolidated financial statement to which it applies.

(ii) Semiannual self-insurance submissions. When the self-insuring applicant's or certificant's demonstrated net worth is not at least ten times the total applicable amount of financial responsibility determined under § 138.80(f)(3), the applicant's or certificant's Treasurer (or equivalent official) must file affidavits with the Director, NPFC, covering the first six months of the applicant's or certificant's current fiscal year. The affidavits must state that neither the working capital

nor the net worth have, during the first six months of the current fiscal year, fallen below the applicant's or certificant's required total applicable amount of financial responsibility as determined under this subpart.

(iii) Additional self-insurance submissions. A self-insuring applicant or certificant—

(A) Must, upon request of the Director, NPFC, within the time specified in the request, file additional financial information; and

(B) Must notify the Director, NPFC, within 5 business days of the date the applicant or certificant knows, or has reason to know, that its working capital or net worth has fallen below the total applicable amounts required by this subpart.

(iv) Time for self-insurance filings. All required annual financial statements must be received by the Director, NPFC, within 90 days after the close of the applicant's or certificant's fiscal year, and all affidavits required by paragraph (b)(3)(ii) of this section must be received by the Director, NPFC, within 30 days after the close of the applicable six-month period. The Director, NPFC, may grant an extension of the time limits for filing the annual financial statements, semi-annual affidavits or additional financial information upon written request and for good cause shown. An applicant or certificant seeking an extension of any deadline must set forth the reasons for the extension request and deliver the request to the Director, NPFC, at least 15 days before the annual financial statements, affidavits or additional information are due. The Director, NPFC, will not consider a request for an extension of more than 60 days.

(v) Failure to submit. The Director, NPFC, may deny or revoke a Certificate for failure of the applicant or certificant to timely file any statement, data, notification, or affidavit required by paragraph (b)(3) of this section.

(vi) Waiver of working capital. The Director, NPFC, may waive the working capital requirement for any applicant or certificant that—

(A) Is a regulated public utility, a municipal or higher-level governmental entity, or an entity operating solely as a charitable, non-profit organization qualifying under Section 501(c) Internal Revenue Code. The applicant or certificant must demonstrate in writing that the grant of a waiver would benefit a local public interest; or

(B) Demonstrates in writing that working capital is not a significant factor in the applicant's or certificant's financial condition. An applicant's or certificant's net worth in relation to the amount of its required total applicable amount of financial responsibility and a history of stable operations are the major elements considered by the Director, NPFC.

(4) Financial Guaranty. By filing with the Director, NPFC, a Financial Guaranty (Form CG–5586–3), or, when applying for a Master Certificate, a Master Financial Guaranty (Form CG–5586–4), executed by not more than four financial guarantors, including, but not limited to, a parent or affiliate acceptable to the Director, NPFC. A financial guarantor must comply with all of the self-insurance provisions of paragraph (b)(3) of this section. In addition, a person who is a financial guarantor for more than one applicant or certificant must have working capital and net worth no less than the aggregate total applicable amounts of financial responsibility determined under § 138.80(f)(3) provided as a financial guarantor for each applicant or certificant, plus the total applicable amount required to be demonstrated by a self-insurer under this subpart if the financial guarantor is also acting as a self-insurer.

(5) Other evidence of financial responsibility. The Director, NPFC, will not accept a self-insurance method other than the one described in paragraph (b)(3) of this section. An applicant may in writing request that the Director, NPFC, accept a method different from one described in paragraph (b)(1), (2), or (4) of this section to demonstrate evidence of financial responsibility. An applicant submitting a request under this paragraph must submit the request to the Director, NPFC, at least 45 days prior to the date the Certificate is required. The applicant must describe in detail the method proposed, the reasons why the applicant does not wish to use or is unable to use one of the methods described in paragraph (b)(1), (2), or (4) of this section, and how the proposed method assures that the responsible parties for the vessel are able to fulfill their obligations to pay costs and damages in the event of an incident or a release or threatened release. The Director, NPFC, will not accept a method under this paragraph that merely deletes or alters a provision of one of the methods described in paragraph (b)(1), (2), or (4) of this section (for example, one that alters the termination clause of the Insurance Guaranty (Form CG–5586). An applicant that makes a request under this paragraph must provide the Director, NPFC, a proposed guaranty form that includes all the elements described in paragraphs (c) and (d) of this section. A decision of the Director, NPFC, not to accept a method requested by an applicant under this paragraph is final agency action.

(c) Forms—(1) Multiple guarantors. Four or fewer insurers (a lead underwriter is considered to be one insurer) may jointly execute an Insurance Guaranty (Form CG–5586) or a Master Insurance Guaranty (Form CG–5586–1). Ten or fewer sureties (including lead sureties) may jointly execute a Surety Bond Guaranty (Form CG–5586–2). Four or fewer financial guarantors may jointly execute a Financial Guaranty (Form CG–5586–3). If more than one insurer, surety, or financial guarantor executes the relevant form—

(i) Each is bound for the payment of sums only in accordance with the percentage of vertical participation specified on the relevant form for that insurer, surety, or financial guarantor. Participation in the form of layering (tiers, one in excess of another) is not acceptable; only vertical participation on a percentage basis and participation with no specified percentage allocation is acceptable. If no percentage of participation is specified for an insurer, surety, or financial guarantor, the liability of that insurer, surety, or financial guarantor is joint and several for the total of the unspecified portions; and

(ii) The guarantors must designate a lead guarantor having authority to bind all guarantors for actions required of guarantors under the Acts, including but not limited to receipt of designation of source, advertisement of a designation, and receipt and settlement of claims.

(2) Operator name. An applicant or certificant must ensure that each form submitted under this subpart sets forth in full the correct legal name of the vessel operator to whom a Certificate is to be issued.

(d) Direct Action—(1) Acknowledgment. Any evidence of financial responsibility filed with the Director, NPFC, under this subpart must contain an acknowledgment by each insurer or other guarantor that an action in court by a claimant (including a claimant by right of subrogation) for costs or damages arising under the provisions of the Acts, may be brought directly against the insurer or other guarantor. The evidence of financial responsibility must also provide that, in the event an action is brought under the Acts directly against the insurer or other guarantor, the insurer or other guarantor may invoke only the following rights and defenses:

(i) The incident, release, or threatened release was caused by the willful

misconduct of the person for whom the guaranty is provided.

(ii) Any defense that the person for whom the guaranty is provided may raise under the Acts.

(iii) A defense that the amount of a claim or claims, filed in any action in any court or other proceeding, exceeds the amount of the guaranty with respect to an incident or with respect to a release or threatened release.

(iv) A defense that the amount of a claim or claims that exceeds the amount of the guaranty, which amount is based on the gross tonnage of the vessel as entered on the vessel's International Tonnage Certificate or other official, applicable certificate of measurement, except when the guarantor knew or should have known that the applicable tonnage certificate was incorrect.

(v) The claim is not one made under either of the Acts.

(2) Limitation on guarantor liability. A guarantor that participates in any evidence of financial responsibility under this subpart will be liable because of that participation, with respect to an incident or a release or threatened release, in any proceeding only for the amount and type of costs and damages specified in the evidence of financial responsibility. A guarantor will not be considered to have consented to direct action under any law other than the Acts, or to unlimited liability under any law or in any venue, solely because of the guarantor's participation in providing any evidence of financial responsibility under this subpart. In the event of any finding that liability of a guarantor exceeds the amount of the guaranty provided under this subpart, that guaranty is considered null and void with respect to that excess.

(e) Public access to data. Financial data filed with the Director, NPFC, by an applicant, certificant, and any other person is considered public information to the extent required by the Freedom of Information Act (5 U.S.C. 552) and permitted by the Privacy Act (5 U.S.C. 552a).

(f) Total applicable amount. The total applicable amount is determined as follows:

(1) The applicable amount under OPA 90 is equal to the applicable vessel limit of liability, which is determined as provided in subpart B of this part.

(2) The applicable amount under CERCLA is determined as follows:

(i) For a vessel over 300 gross tons carrying a hazardous substance as cargo, the greater of $5,000,000 or $300 per gross ton.

(ii) For any other vessel over 300 gross tons, the greater of $500,000 or $300 per gross ton.

(3) The total applicable amount is the applicable amount determined under paragraph (f)(1) of this section plus the applicable amount determined under paragraph (f)(2) of this section.

**§ 138.85 Implementation schedule for amendments to applicable amounts by regulation.**

Each operator of a vessel described in § 138.15 must establish evidence of financial responsibility acceptable to the Director, NPFC, in an amount equal to or greater than the total applicable amounts determined under § 138.80(f), by not later than January 15, 2009. In the event an applicable amount determined under § 138.80(f) is thereafter amended by regulation, each operator of a vessel described in § 138.15 must establish evidence of financial responsibility acceptable to the Director, NPFC, in an amount equal to or greater than the amended total applicable amount, by not later than 90 days after the effective date of the final rule, unless another date is required by statute or specified in the amending regulation.

**§ 138.90 Individual and Fleet Certificates.**

(a) The Director, NPFC, issues an individual Certificate for each vessel listed on a completed Application or request for renewal when the Director, NPFC, determines that acceptable evidence of financial responsibility has been provided and appropriate fees have been paid, except where a Fleet Certificate is issued under this section or where a Master Certificate is issued under § 138.110. Each Certificate of any type issued under this subpart is issued only in the name of a vessel operator and is effective for not more than 3 years from the date of issuance, as indicated on each Certificate. An authorized official of the applicant may submit to the Director, NPFC, a letter requesting that additional vessels be added to a previously submitted Application for an individual Certificate. The letter must set forth all information required in item 5 of the Application form. The authorized official must also file, or cause to be filed with the Director, NPFC, acceptable evidence of financial responsibility, if required, and must pay all applicable certification fees for the additional vessels.

(b) An operator of a fleet of two or more barges that are not tank vessels and that from time to time may be subject to this subpart (*e.g.*, a hopper barge over 300 gross tons when carrying oily metal shavings or similar cargo) may apply to the Director, NPFC, for issuance of a Fleet Certificate, so long as the operator of such a fleet is a self-insurer or arranges with an acceptable guarantor to cover, automatically, all such barges for which the operator may from time to time be responsible.

(c) A person must not make any alteration on any copy of a Certificate issued under this subpart.

(d) If, at any time after a Certificate has been issued, a certificant becomes aware of a change in any of the facts contained in the Application or supporting documentation, the certificant must notify the Director, NPFC, in writing within 10 days of becoming aware of the change. A vessel or operator name change or change of a guarantor must be reported by the operator as soon as possible by telefax or other electronic means to the Director, NPFC, and followed by a written notice sent within 3 business days. (See, § 138.45, Where to apply for and renew Certificates, for contact information).

(e) Except as provided in § 138.90(f), at the moment a certificant ceases to be the operator of a vessel for any reason, including a vessel that is scrapped or transferred to a new operator, the individual Certificate naming the vessel is void and its further use is prohibited. In that case, the certificant must, within 10 business days of the Certificate becoming void, submit the following information in writing to the Director, NPFC:

(1) The number of the individual Certificate and the name of the vessel.

(2) The date and reason why the certificant ceased to be the operator of the vessel.

(3) The location of the vessel on the date the certificant ceased to be the operator.

(4) The name and mailing address of the person to whom the vessel was sold or transferred.

(f) In the event of the temporary transfer of custody of an unmanned barge with a Certificate under this subpart, where the certificant transferring the barge continues to be liable under the Acts and continues to maintain on file with the Director, NPFC, acceptable evidence of financial responsibility with respect to the barge, the existing Certificate remains in effect in respect to that vessel, and a temporary new Certificate is not required for the vessel. The temporary transferee is encouraged to require the transferring certificant to acknowledge in writing that the transferring certificant agrees to remain responsible for pollution liabilities.

**§ 138.100 Non-owning operator's responsibility for identification.**

(a) Each operator that is not an owner of a vessel with a Certificate under this subpart, other than an unmanned barge, must ensure that the original or a legible copy of the demise charter-party (or other written document on the owner's letterhead, signed by the vessel owner, which specifically identifies the vessel operator named on the Certificate) is maintained on board the vessel.

(b) The demise charter-party or other document required by paragraph (a) of this section must be presented, upon request, for examination and copying, to a United States Government official.

**§ 138.110 Master Certificates.**

(a) A contractor or other person who is responsible for a vessel in the capacity of a builder, scrapper, lessor, or seller (including a repairer who agrees to be responsible for a vessel under its custody) may apply for a Master Certificate instead of applying for an individual Certificate or Fleet Certificate for each vessel. A Master Certificate covers all of the vessels subject to this subpart held by the applicant solely for purposes of construction, repair, scrapping, lease, or sale. A vessel which is being operated commercially in any business venture, including the business of building, repairing, scrapping, leasing, or selling (e.g., a slop barge used by a shipyard) cannot be covered by a Master Certificate. Any vessel for which a Certificate is required, but which is not eligible for a Master Certificate, must be covered by either an individual Certificate or a Fleet Certificate.

(b) An applicant for a Master Certificate must submit an Application form in the manner prescribed by §§ 138.40 through 138.60. An applicant must establish evidence of financial responsibility in accordance with § 138.80, by submission, for example, of an acceptable Master Insurance Guaranty Form, Surety Bond Guaranty Form, Master Financial Guaranty Form, or acceptable self-insurance documentation. An Application for a Master Certificate must be completed in full, except for Item 5. The applicant must make the following statement in Item 5: ''This is an application for a Master Certificate. The largest tank vessel to be covered by this application is [insert applicable gross tons] gross tons. The largest vessel other than a tank vessel is [insert applicable gross tons] gross tons.'' The dollar amount of financial responsibility evidenced by the applicant must be sufficient to meet the amount required under this subpart.

(c) Each Master Certificate issued by the Director, NPFC, indicates—

(1) The name of the applicant (i.e., the builder, repairer, scrapper, lessor, or seller);

(2) The date of issuance and termination, encompassing a period of not more than 3 years; and

(3) The gross tons of the largest tank vessel and gross tons of the largest vessel other than a tank vessel eligible for coverage by that Master Certificate. (The Master Certificate does not identify the name of each vessel covered by the Certificate.)

(d) Each additional vessel which does not exceed the respective tonnages indicated on the Master Certificate and which is eligible for coverage by a Master Certificate is automatically covered by that Master Certificate. Before acquiring a vessel, by any means, including conversion of an existing vessel, that would have the effect of increasing the certificant's required applicable amount of financial responsibility (above that provided for issuance of the existing Master Certificate), the certificant must submit to the Director, NPFC, the following:

(1) Evidence of increased financial responsibility.

(2) A new certification fee.

(3) Either a new Application or a letter amending the existing Application to reflect the new gross tonnage which is to be indicated on a new Master Certificate.

(e) A person to whom a Master Certificate has been issued must submit to the Director, NPFC, every six months beginning the month after the month in which the Master Certificate is issued, a report indicating the name, previous name, type, and gross tonnage of each vessel covered by the Master Certificate during the preceding six-month reporting period and indicating which vessels, if any, are tank vessels.

**§ 138.120 Certificates, denial or revocation.**

(a) The Director, NPFC, may deny a Certificate when an applicant—

(1) Willfully or knowingly makes a false statement in connection with an Application or other submission or filing under this subpart for an initial or renewal Certificate;

(2) Fails to establish acceptable evidence of financial responsibility as required by this subpart;

(3) Fails to pay the required Application or certification fees;

(4) Fails to comply with or respond to lawful inquiries, regulations, or orders of the Coast Guard pertaining to the activities subject to this subpart; or

(5) Fails to timely file with the Director, NPFC, required statements, data, notifications, or affidavits.

(b) The Director, NPFC, may revoke a Certificate when a certificant—

(1) Willfully or knowingly makes a false statement in connection with an Application for an initial or a renewal Certificate, or in connection with any other filing required by this subpart;

(2) Fails to comply with or respond to lawful inquiries, regulations, or orders of the Coast Guard pertaining to the activities subject to this subpart; or

(3) Fails to timely file with the Director, NPFC, required statements, data, notifications, or affidavits.

(c) A Certificate is immediately invalid, and considered revoked, without prior notice, when the certificant—

(1) Fails to maintain acceptable evidence of financial responsibility as required by this subpart;

(2) Is no longer the responsible operator of the vessel or fleet in question; or

(3) Alters any copy of a Certificate.

(d) The Director, NPFC, will advise the applicant or certificant, in writing, of the intention to deny or revoke a Certificate under paragraph (a) or (b) of this section and will state the reason for the decision. Written advice from the Director, NPFC, that an incomplete Application will be considered withdrawn unless it is completed within a stated period, is the equivalent of a denial.

(e) If the intended revocation under paragraph (b) of this section is based on failure to timely file required financial statements, data, notifications, or affidavits with the Director, NPFC, the revocation is effective 10 days after the date of the notice of intention to revoke, unless, before the effective date of the revocation, the certificant demonstrates to the satisfaction of the Director, NPFC, that the required documents were timely filed or have been filed.

(f) If the intended denial is based on paragraph (a)(1) or (a)(4) of this section, or the intended revocation is based on paragraph (b)(1) or (b)(2) of this section, the applicant or certificant may request, in writing, an opportunity to present information for the purpose of showing that the applicant or certificant is in compliance with the subpart. The request must be received by the Director, NPFC, within 10 days after the date of the notification of intention to deny or revoke. A Certificate subject to revocation under this paragraph remains valid until the Director, NPFC, issues a written decision revoking the Certificate.

(g) An applicant or certificant whose Certificate has been denied under paragraph (a) of this section or revoked under paragraph (b) or (c) of this section

may request the Director, NPFC, to reconsider the denial or revocation. The certificant must submit a request for reconsideration, in writing, to the Director, NPFC, within 20 days of the date of the denial or revocation. The certificant must state the reasons for requesting reconsideration. The Director, NPFC, will generally issue a written decision on the request within 30 days of receipt, provided that, if the Director, NPFC, does not issue a decision within 30 days, the request for reconsideration will be deemed to have been denied, and the denial or revocation will be deemed to have been affirmed. Unless the Director, NPFC, issues a decision reversing the revocation, a revoked Certificate remains invalid. A decision by the Director, NPFC, affirming a denial or revocation, is final agency action.

**§ 138.130 Fees.**

(a) The Director, NPFC, will not issue or renew a Certificate until the fees set forth in paragraphs (c) and (d) of this section have been paid.

(b) For those using E-COFR, credit card payment is required. Otherwise, fees must be paid in United States currency by check, draft, or postal money order made payable to the ''U.S. Coast Guard''.

(c) An applicant who submits an Application under this subpart must pay a non-refundable Application fee of $200 for each Application (i.e., individual Certificate, Fleet Certificate, or Master Certificate), except as follows:

(1) An Application for an additional (i.e., supplemental) individual Certificate,

(2) A request to amend or renew an existing Certificate, or

(3) An Application submitted within 90 days following a revocation or other invalidation of a Certificate.

(d) In addition to the Application fee of $200, an applicant must pay a certification fee of $100 for each vessel for which a Certificate is requested. An applicant must pay the $100 certification fee for each vessel listed in, or later added to, an Application for an individual Certificate(s). An applicant must pay the $100 certification fee to renew or to reissue a Certificate for any reason, including, but not limited to, a vessel or operator name change.

(e) A certification fee is refunded, upon receipt of a written request, if the Application is denied or withdrawn before issuance of the Certificate. Overpayments of Application and certification fees are refunded, on request, only if the refund is for $100 or more. However, any overpayments not refunded will be credited, for a period of 3 years from the date of receipt of the monies by the Coast Guard, for the applicant's possible future use or transfer to another applicant under this subpart.

**§ 138.140 Enforcement.**

(a) Any person who fails to comply with this subpart with respect to evidence of financial responsibility under Section 1016 of OPA 90 (33 U.S.C. 2716) is subject to a civil penalty under Section 4303(a) of OPA 90 (33 U.S.C. 2716a(a)). In addition, under Section 4303(b) of OPA 90 (33 U.S.C. 2716a(b)), the Attorney General may secure such relief as may be necessary to compel compliance with the OPA 90 requirements of this subpart, including termination of operations. Further, any person who fails to comply with this subpart with respect to evidence of financial responsibility under Section 108(a) of CERCLA (42 U.S.C. 9608(a)), is subject to a Class I administrative civil penalty, a Class II administrative civil penalty or a judicial penalty under Section 109 of CERCLA (42 U.S.C. 9609).

(b) The Secretary of the Department in which the U.S. Coast Guard is operating will withhold or revoke the clearance required by 46 U.S.C. 60105 to any vessel subject to this subpart that has not provided the evidence of financial responsibility required by this subpart.

(c) The Coast Guard may deny entry to any port or place in the United States or the navigable waters of the United States, and may detain at a port or place in the United States in which it is located, any vessel subject to this subpart, which has not provided the evidence of financial responsibility required by this subpart.

(d) Any vessel subject to this subpart which is found operating in the navigable waters without having been issued a Certificate or maintained the necessary evidence of financial responsibility as required by this subpart is subject to seizure by, and forfeiture to, the United States.

(e) Knowingly and willfully using an altered copy of a Certificate, or using a copy of a revoked, expired or voided Certificate for anything other than recordkeeping purposes, is prohibited. If a Certificate is revoked, has expired or is rendered void for any reason, the certificant must cease using all copies of the Certificate for anything other than the operator's own historical recordkeeping purposes.

**§ 138.150 Service of process.**

(a) When executing the forms required by this subpart, each applicant, certificant and guarantor must designate thereon a person located in the United States as its agent for service of process for purposes of this subpart and for receipt of notices of responsible party designations and presentations of claims under the Acts (collectively referred to herein as ''service of process''). Each designated agent must acknowledge the agency designation in writing unless the agent has already furnished the Director, NPFC, with a master (i.e., blanket) agency acknowledgment showing that the agent has agreed in advance to act as the United States agent for service of process for the applicant, certificant, or guarantor in question.

(b) If any applicant, certificant, or guarantor desires, for any reason, to change any designated agent, the applicant, certificant, or guarantor must notify the Director, NPFC, of the change. If a master agency acknowledgment for the new agent is not on file with NPFC, the applicant, certificant, or guarantor must furnish to the Director, NPFC, all the relevant information, including the new agent's acknowledgment, required in accordance with paragraph (a) of this section. In the event of death, disability, unavailability, or similar event of a designated agent, the applicant, certificant, or guarantor must designate another agent in accordance with paragraph (a) of this section within 10 days of knowledge of any such event. The applicant, certificant, or guarantor must submit the new designation to the Director, NPFC. The Director, NPFC, may deny or revoke a Certificate if an applicant, certificant, or guarantor fails to designate and maintain an agent for service of process.

(c) If a designated agent cannot be served because of death, disability, unavailability, or similar event, and another agent has not been designated under this section, then service of process on the Director, NPFC, will constitute valid service of process. Service of process on the Director, NPFC, will not be effective unless the server—

(1) Sends the applicant, certificant, or guarantor, as applicable (by registered mail, at the last known address on file with the Director, NPFC), a copy of each document served on the Director, NPFC; and

(2) Attests to this registered mailing, at the time process is served upon the Director, NPFC, indicating that the intent of the mailing is to effect service of process on the applicant, certificant, or guarantor and that service on the designated agent is not possible, stating the reason why.

## Subpart B—OPA 90 Limits of Liability (Vessels and Deepwater Ports)

### § 138.200 Scope.

This subpart sets forth the limits of liability for vessels and deepwater ports under section 1004 of the Oil Pollution Act of 1990, as amended (33 U.S.C. 2704) (OPA 90), including adjustments pursuant to section 1004(d) of OPA 90 (33 U.S.C. 2704(d)).

### § 138.210 Applicability.

This subpart applies to you if you are a responsible party for a vessel as defined under Section 1001(37) of OPA 90 (33 U.S.C. 2701(37)) or a deepwater port as defined under Section 1001(6) of OPA 90 (33 U.S.C. 2701(6)), unless your OPA 90 liability is unlimited under Section 1004(c) of OPA 90 (33 U.S.C. 2704(c)).

### § 138.220 Limits of liability.

(a) Vessels. (1) The OPA 90 limits of liability for vessels are—

(i) For a tank vessel greater than 3,000 gross tons with a single hull, including a single-hull vessel fitted with double sides only or a double bottom only, the greater of $3,000 per gross ton or $22,000,000;

(ii) For a tank vessel greater than 3,000 gross tons with a double hull, the greater of $1,900 per gross ton or $16,000,000.

(iii) For a tank vessel less than or equal to 3,000 gross tons with a single hull, including a single-hull vessel fitted with double sides only or a double bottom only, the greater of $3,000 per gross ton or $6,000,000.

(iv) For a tank vessel less than or equal to 3,000 gross tons with a double hull, the greater of $1,900 per gross ton or $4,000,000.

(v) For any other vessel, the greater of $950 per gross ton or $800,000.

(2) As used in this paragraph (a), the term *double hull* has the meaning set forth in 33 CFR part 157 and the term *single hull* means any hull other than a double hull.

(b) Deepwater ports. The OPA 90 limits of liability for deepwater ports are—

(1) Generally. For any deepwater port other than a deepwater port with a limit of liability established by regulation under Section 1004(d)(2) of OPA 90 (33 U.S.C. 2704(d)(2)) and set forth in paragraph (b)(2) of this section, $350,000,000; and

(2) For deepwater ports with limits of liability established by regulation under Section 1004(d)(2) of OPA 90 (33 U.S.C. 2704(d)(2)):

(i) For the Louisiana Offshore Oil Port (LOOP), $62,000,000;

(ii) [Reserved].

(c) [Reserved].

Dated: September 3, 2008.

**Craig A. Bennett,**

*Director, National Pollution Funds Center, United States Coast Guard.*

[FR Doc. E8–21554 Filed 9–16–08; 8:45 am]

BILLING CODE 4910–15–P

## DEPARTMENT OF AGRICULTURE

## Forest Service

## 36 CFR Parts 215 and 218

**RIN 0596–AC15**

## Predecisional Administrative Review Process for Hazardous Fuel Reduction Projects Authorized Under the Healthy Forests Restoration Act of 2003

**AGENCY:** Forest Service, USDA.

**ACTION:** Final rule.

**SUMMARY:** This document makes final the interim rule that was published on January 9, 2004, with minor changes to both parts 215 and 218. This rule establishes a process by which the public may file objections to seek administrative review of proposed hazardous fuel reduction projects authorized by the Healthy Forests Restoration Act of 2003 (HFRA), Public Law 108–148. Section 105 of the act directs the Secretary of Agriculture to publish final regulations following public comment on the interim final regulations. This final rule refines the HFRA objection procedures based on public comment and agency experience applying the interim final rule. These changes add clarity to the procedural direction, describe authorized hazardous fuel reduction projects not subject to objection, clarify notification requirements, clarify the eligibility criteria for who may file an objection, provide for the incorporation of certain documents into objections by reference, and clarify how timeliness of objection filing will be determined.

**DATE:** *Effective Date:* This rule is effective October 17, 2008.

**ADDRESSES:** The Forest Service objection procedures for proposed hazardous fuel reduction projects authorized by the HFRA are set out in 36 CFR part 218, which is available electronically on the World Wide Web at *http://www.fs.fed.us/objections/objections_related.php#app_work* . Single paper copies are available by contacting Kevin Lawrence, Forest Service-USDA, Ecosystem Management Coordination Staff (Mail Stop 1104), 1400 Independence Avenue, SW., Washington, DC 20250–1104. Additional information can be found at *http://www.fs.fed.us/emc/applit/.*

**FOR FURTHER INFORMATION CONTACT:** Assistant Director for Appeals and Litigation Deborah Beighley at (202) 205–1277 or Appeal Specialist Kevin Lawrence at (202) 205–2613. Individuals who use telecommunication devices for the deaf may call the Federal Information Relay Service at 1–800–877–8339 between 8 a.m. and 8 p.m. Eastern Standard Time, Monday through Friday.

**SUPPLEMENTARY INFORMATION:** On December 3, 2003, President George W. Bush signed into law the Healthy Forests Restoration Act of 2003 (HFRA) to reduce the threat of destructive wildfires while upholding environmental standards and encouraging early public input during planning processes.

One of the provisions of the Act (section 105) required the Secretary of Agriculture to issue an interim final rule to establish a predecisional administrative review process for hazardous fuel reduction projects authorized by the HFRA and to promulgate final regulations after providing for public comments.

On January 9, 2004, the Forest Service published an interim final rule and request for comments (69 FR 1529). The interim final rule established a predecisional administrative review process at 36 CFR part 218, subpart A, and 36 CFR part 215 was amended to exempt hazardous fuel reduction projects authorized by the HFRA from the notice, comment, and appeal procedures set out at part 215.

In giving direct notice of the interim final rule, the Department also set a 90-day comment period and invited comments from individuals, industry, national organizations, and Federal agencies. A total of 67 comment letters were received from individuals, representatives of State government agencies, environmental groups, professional organizations, and industry. Each comment received consideration in the development of the final rule.

The Department has also used the intervening time since the comment period on the interim final rule to gain additional experience with its implementation. Forest Service records indicate approximately 80 decisions have been issued for fuels reduction projects under HFRA Title I authority since the beginning of 2005. The Agency's application of the pre-decisional objection process to these projects has provided valuable insight to

how the interim final rule functions in practice, including where it might be improved. The lessons learned from this experience are reflected in several of the changes made in the final rule.

The following is a summary of public comments and the Department's responses, including changes from the interim final rule.

**General Comments**

The Forest Service received some comments related to support for, or opposition to, the HFRA. These comments are not directly relevant to this rulemaking. They were read and considered, but are not being discussed in this notice.

**Comments in Response to Specific Sections**

Set out below are discussions and responses to public comments received on specific sections in 36 CFR part 218 during the comment period on the interim final rule. The discussion identifies differences between the interim final rule and the final rule and why these changes were made. The final rule has been reorganized and, for the reader's convenience, new titles and new designations are set out in the table below. In addition, references to ''land and resource management plans'' in part 218 and the amended section 215.3(a) of the interim final rule have been shortened to ''land management plans'' to reflect the wording in the recently published 36 CFR part 219 final rule for National Forest System Land Management Planning (73 FR 21468).

| Interim rule section number and title | Final section number and title |
|---|---|
| § 218.1 Purpose and scope | § 218.1 Purpose and scope. |
| § 218.2 Definitions | § 218.2 Definitions. |
| § 218.3 Authorized hazardous fuel reduction projects subject to the objection process. | § 218.3 Authorized hazardous fuel reduction projects subject to objection. |
| | § 218.4 Authorized hazardous fuel reduction projects not subject to objection. |
| § 218.4 Legal notice of objection process for proposed authorized hazardous fuel reduction projects. | § 218.5 Giving notice of objection process for proposed authorized hazardous fuel reduction projects subject to objection. |
| § 218.5 Reviewing officer | § 218.6 Reviewing officer. |
| § 218.6 Who may file an objection | § 218.7 Who may file an objection. |
| § 218.7 Filing an objection | § 218.8 Filing an objection. |
| § 218.8 Objections set aside from review | § 218.9 Objections set aside from review. |
| § 218.9 Objection time periods and process | § 218.10 Objection time periods and process. |
| § 218.10 Resolution of objections | § 218.11 Resolution of objections. |
| § 218.11 Timing of authorized hazardous fuel reduction project decision. | § 218.12 Timing of authorized hazardous fuel reduction project decision. |
| § 218.12 Secretary's authority | § 218.13 Secretary's authority. |
| § 218.13 Judicial proceedings | § 218.14 Judicial proceedings. |
| § 218.14 Information collection requirements | § 218.15 Information collection requirements. |
| § 218.15 Applicability and effective date | § 218.16 Applicability and effective date. |

Section 218.1 Purpose and scope. This section describes the purpose and scope of the rule. There were no comments on section 218.1, and no changes were made to this section in the final rule.

Section 218.2 Definitions. This section defines some of the commonly used terms and phrases in the final rule. In addition to the changes made in response to public comment as described below, a sentence has been added to the end of the definition for ''objection period'' to specify that when the Chief is the responsible official the objection period begins following publication of a notice in the **Federal Register**. This addition reflects a change made at section 218.5(c) of the final rule.

*Comment:* Definition of Lead Objector. One respondent stated the section 218.2 definition for lead objector, under which the objection reviewing officer could choose one person to represent all parties participating in a multi-party objection, is ill advised. The respondent believed all objectors should have the right to communicate with the Forest Service during the informal disposition process and at any other time when communication between objectors and the Forest Service is appropriate or necessary.

*Response:* The interim final rule does not state that the lead objector is appointed by the objection reviewing officer. Section 218.7(d) of the interim final rule (section 218.8(c) in the final rule) describes the minimum content requirements of an objection and one of those requirements is ''(3) When multiple names are listed on an objection, identification of the lead objector (§ 218.2).'' This is required by the Department so that a lead objector speaks for one objection filed by multiple parties. A lead objector has been so defined at section 218.2.

Identification of a lead objector is important for timely and effective communication. The regulations also state that the objector may request to meet to discuss issues raised in the objection, and the regulations state that all meetings are open to the public. If the lead objector of a multi-party objection requests a meeting, the meeting would be open to all the parties.

*Comment:* Definition of Objector. Some respondents commented that the rules for who could object were not consistent throughout part 218. They felt terminology should be used that would clarify whether objectors had to comment during scoping or during a comment period.

*Response:* The criteria for qualifying as an objector have been clarified in section 218.7(a) of the final rule, and that section is now specifically referenced in the definition of an objector in section 218.2. For proposed authorized hazardous fuel reduction projects described in a draft environmental impact statement (EIS), such opportunity for public comment will be fulfilled during scoping, the comment period on the draft EIS in accordance with procedures in 40 CFR 1506.10, or any other periods where public comment is specifically requested. For proposed authorized hazardous fuel reduction projects described in an environmental assessment (EA), such opportunity for public comment will be fulfilled during scoping or any other periods where public comment is specifically requested.

*Comment:* Definition of Reviewing Officer. Some respondents commented that the reviewing officer should be someone other than an agency employee who they allege may have a conflict of interest or financial bias in the decision. Some respondents felt that the reviewing officer should have some ''distance'' from the decision. They felt a reviewing officer for a district ranger decision should be at the regional level and not a forest supervisor who has a supervisory interest in the district ranger decision. Other respondents felt the reviewing officer should be an independent administrative law judge appointed by the Secretary of Agriculture.

*Response:* Those alleging a potential for financial bias on the part of a higher-level agency official contend that hazardous fuel reduction projects may result in revenue retained by the Forest Service (e.g., deposits made to the Salvage Sale Fund, Knutson-Vandenberg Fund, Brush-Disposal Fund, or other Forest Service account), and that the Constitution requires that adjudicators employed independently of the Forest Service decide objections to this class of projects. It is correct that receipts generated from the sale of timber products generated by hazardous fuel reduction projects may be directed into any of a number of special fund accounts. The Forest Service annually reports to Congress, as part of the President's Budget, all its receipts, including those from timber sales, and how those receipts are disbursed—disbursed to the states and counties where National Forest System lands are located, returned to the U.S. Treasury, or deposited to the Knutson-Vandenberg Fund, the Brush-Disposal Fund, etc. The Forest Service must use the receipts that it keeps from timber sales for tightly defined purposes, as required by the statutes authorizing the special fund accounts. This information is available to Congress as it develops the annual budget appropriation for the Forest Service. The statutes authorizing collection of these funds and the budget process clearly demonstrate that Congress understands that money is generated from the sale of timber from the national forests, and that a portion of that money may be used for specific forest management purposes.

This issue is closely related to one discussed in the final rule at 36 CFR 215, Notice, Comment, and Appeal Procedures for National Forest System Projects and Activities (60 FR 33582, June 4, 2003). The Department decided for project-level appeals that it was appropriate that the position deciding an appeal should be at the field level. With the Agency's decentralized organization, review by the decisionmaker's direct supervisor creates a healthy relationship in the chain of command and creates incentives for collaboration at the decisionmaking level. The Department feels that this level of review has been successful in the part 215 rule for administrative appeals and; therefore, the part 218 rule for a predecisional administrative review process follows the same procedure.

Section 218.3 Authorized hazardous fuel reduction projects subject to objection. This section describes hazardous fuel reduction projects subject to the objection process. In addition to the change made in response to public comment as described below, the title of the section has been changed slightly to be more concise and consistent with the corresponding section in the part 215 rule for administrative appeals of project decisions.

*Comment:* Some respondents commented that non-significant amendments to a land management plan for HFRA projects should also use the objection process.

*Response:* The Department agrees that non-significant amendments to a land management plan, when approved for a specific HFRA project at the same time the project decision is made, should be subject to the predecisional review process. This is consistent with the administrative review of non-significant amendments associated with non-HFRA projects (36 CFR part 215) and the objection process under the planning regulations at 36 CFR part 219. Section 218.3(b) has been added to the final rule to clarify that such amendments are subject to the objection process.

New Section 218.4 Authorized hazardous fuel reduction projects not subject to objection. This section has been added in response to public comment. It explains when authorized hazardous fuel reduction projects are not subject to objection.

*Comment:* A comment was received that a project does not need to be subject to objection if there were no written comments or if written comments were supportive, similar to administrative appeal regulations at part 215.

*Response:* The Department agrees that the objection process is not needed when written comments were not received. Clearly, if no one has established their eligibility to object pursuant to section 218.7, there is no need to provide an opportunity to file objections.

The Department does not agree that the objection process is not needed if only supportive comments were received. The HFRA (section 105(a)(3)) directs that those who submit specific written comments that relate to the proposed action are eligible to participate in the objection process. No distinction is made between supportive and critical comments; eligibility is extended in either case. Because eligibility to participate can be gained through the proper submittal of supportive comments, it is appropriate to preserve the procedural opportunity for those who participated in project planning, even where the filing of objections may be unlikely.

A provision has been added at section 218.4 for making authorized hazardous fuel reduction projects not subject to objection when no written comments were received.

Section 218.5 (was section 218.4 in interim final rule) Giving notice of proposed authorized hazardous fuel reduction projects subject to objection. This section establishes the requirements for giving public notice of the opportunity to file an objection to a proposed authorized hazardous fuel reduction project. In addition to the changes made in response to public comment as described below, several changes were made based on additional agency review of the interim final rule and the Agency's experience with implementing that rule.

The title of the section was modified to more clearly reflect its purpose and content.

Section 218.5(b) was reworded to specify that the responsible official must promptly ''distribute'' the final EIS or EA, rather than ''mail'' the documents as stated in the interim final rule. The change was made to more clearly allow for dissemination of the documents by means other than just the mail, for example by e-mail. The description of who should be provided the documents was also changed to remove the reference to those on a project mailing list and to provide specific reference to the section of the rule describing who may file an objection. The reference to a project mailing list was removed so as not to imply that such a list must be maintained.

An addition was made at section 218.5(c)(1) to require, as part of the objection content, a concise description of any proposed land management plan amendments that were proposed along with the project. This wording was added to provide more consistency with the change at section 218.3(b) that makes authorized hazardous fuel reduction projects approved contemporaneously with a plan amendment subject to objection.

An addition was made in section 218.5(c)(2)(iv) requiring notices of objection opportunities to specify that incorporation of documents by reference is permitted only as provided for at section 218.8(b).

*Comment:* Some respondents commented that it would be hard for interested parties to know the objection deadline because it is published in local newspapers. Some respondents commented that notices of HFRA projects should be published and publicly available on stable Web sites on the internet, as well as in newspapers of record.

*Response:* The requirement for publishing the legal notice in the newspaper of record is consistent with how notification under the project-level appeal regulations at 36 CFR part 215 has been conducted since 1993. The Department believes the rule as stated is the most accurate method for potential appellants to know the filing end date.

One portion of this section was found upon further review to be potentially confusing. Section 218.5(b) of the interim final rule included a requirement, upon completion and mailing of a final EIS or EA for an authorized hazardous fuel project, to publish legal notice of the opportunity to object in the applicable newspaper of record. The section went on to state, ''When the Chief is the Responsible Official, notice shall also be published in the **Federal Register**.'' The use of the word ''also'' suggests in these instances a notice is to be published in a newspaper of record and the **Federal Register** even though there is no provision in the rule for the Chief establishing a newspaper of record. Furthermore, given the broad geographic scope of interest in many decisions made by the Chief, it makes little sense to rely on any one newspaper for providing public notice. This requirement has, therefore, been modified to remove the word ''also'' so that the **Federal Register** will be the only required location for published notice of an opportunity to object when the Chief is the responsible official. The option to publish additional notices in one or more newspapers, as appropriate, will always exist.

At one time, the part 215 rule for project-level appeals directed that the deadline for filing appeals be published with the notice. As a result, the Agency had to estimate the date of publication when preparing notices. Although the Agency can request that newspapers publish notices on a certain date, a publication date is not guaranteed. When publication occurs on a different date than estimated, the result has been conflicting dates and confusion. The Department believes that removing this requirement resolved the potential for conflicts and leaves all parties with the same information. The Department believes that the matter is best addressed by having the appellant calculate the appeal filing deadline from the published notice.

The Department also recognizes that those participants eligible to object to a given decision will be made aware of that opportunity when they receive a copy of the final EIS or EA that must be distributed (section 218.5(b) of the final rule; section 218.4(a) of the interim final rule).

*Comment:* Some respondents stated that for an EA the public would not have the opportunity to review and comment on a draft EA, and that commenting during scoping is difficult because the project plans are vague. The first time the public would see the EA is when it is distributed for the 30-day objection process.

*Response:* Section 104 of the HFRA requires public notice of each project, a public meeting during the preparation stage of each project, and collaboration in order to ''encourage meaningful public participation during preparation of projects.'' The Department believes these requirements serve to assure ample opportunities for involvement are provided for those interested in HFRA projects.

There is no precedent for a requirement to take comment on a draft EA because circulation of a draft EA is not required for projects falling outside HFRA authority. It is not required by the National Environmental Policy Act (NEPA; 42 U.S.C. 4321, *et seq.*), the Appeal Reform Act (Pub. L. 102–381, 106 Stat. 419), or their implementing regulations (40 CFR parts 1500 through 1508 and 36 CFR part 215, respectively). Section 218.5 of the final rule does require the responsible official to distribute a final EIS or EA prior to making a decision so that those eligible to file an objection (section 218.7) have an opportunity to do so.

Given these factors, the Department does not feel that requiring circulation of a draft EA for HFRA-authorized projects is warranted. Responsible officials have the option of circulating a draft EA if they deem it appropriate, but it is not required.

*Comment:* Some respondents commented that the public must be informed at the beginning of a project whether it is an HFRA project and falls under the objection procedure set out in part 218. The public needs and deserves to know in advance what opportunities will be available for further comment after scoping.

*Response:* The final rule requires notification that an authorized hazardous fuel reduction project is subject to the objection process in the required newspaper legal notice or **Federal Register** notice. However, the public notices, public meetings, and collaboration required under HFRA will also provide multiple opportunities for public involvement that will inform the participants early in the process that the project is an HFRA project. The Department believes an additional requirement to provide early disclosure that a proposed project is authorized under HFRA is not warranted; however, paragraph (a) has been added in the final rule at section 218.5 to clarify that it is advisable that such disclosure be made during scoping and in the EIS or EA.

Section 218.6 (was section 218.5 in interim final rule) Reviewing officer. This section describes the role and authority of the reviewing officer. No comments were received on section 218.5 of the interim final rule and no changes were made other than the section designation.

Section 218.7 (was section 218.6 in interim final rule) Who may file an objection. This section describes who may file an objection, including the type and timing of participation in the project planning process that is required to be recognized as an objector.

*Comment:* Some respondents commented that not allowing the public to comment on draft EAs violates NEPA.

*Response:* This assertion is incorrect. NEPA does not require a draft EA or a comment opportunity on a draft EA. Implementing regulations for NEPA merely require agencies to ''involve environmental agencies, applicants, and the public, to the extent practicable, in preparing assessments'' (40 CFR 1501.4(b)).

*Comment:* Some respondents commented that prohibiting individuals of an organization from filing an objection as a member of that organization undermines case law regarding organizational standing.

*Response:* Caselaw on organizational standing defines when an organization may sue in court and assert the rights of the organization's members in accordance with Article III of the Constitution. This rule defines the prerequisites for an administrative review under the HFRA. The two concepts are related, but have separate legal foundations and need not be identical.

Any number of members of an organization can submit written

comments. Under this rule, if one comment was submitted by one authorized representative of the organization, the organization may object, but the Agency will not accept objections from multiple members of the organization who did not participate during the process. An organization represents all its members but does not give standing to each member to file individual objections. This is the same approach used with project-level appeal regulations at 36 CFR part 215 that state, ''Comments received from an authorized representative(s) of an organization are considered those of the organization only; individual members of that organization do not meet appeal eligibility solely on the basis of membership in an organization; the member(s) must submit substantive comments as an individual in order to meet appeal eligibility'' (36 CFR 215.13(a)).

*Comment:* Some respondents commented that anyone should be able to file an objection. Restricting who can object seems to be an attempt on the part of the Agency to shortchange the public.

*Response:* The HFRA specifically states that to be eligible to participate in the administrative review process for an authorized hazardous fuels reduction project a person must submit specific written comments that relate to the proposed action (section 105(a)(3)). Congress intended for interested persons to participate early in the project planning process and not wait until the documentation has been finalized or after the decision has been issued to become involved. Although the administrative review process is an opportunity to voice concerns, it is more advantageous to both the responsible official and the public when those who have helpful and important information that could affect a decision bring it forward during project planning.

Section 218.8 (was section 218.7 in interim final rule) Filing an objection. This section describes how to file an objection, including content requirements and limitations. In addition to the change made in response to public comment as described below, another change was made based on additional Agency review of the interim final rule. The direction in the interim final rule at section 218.7(b) describing the objector's responsibility for including sufficient narrative in an objection has been moved to section 218.8(c)(5) in the final rule because it is more appropriately included with the other content requirements for an objection.

*Comment:* Some respondents commented that objections should be limited to issues raised in specifically written comments. They believe the Agency should have a fair chance to address and document significant issues prior to the initiation of administrative review.

*Response:* The Department interprets HFRA's requirements to provide an opportunity for public comment, conduct a public meeting, and facilitate collaboration during preparation of the project as sufficient to insure issues surface early in the planning process. While it is most effective to the planning effort if issues are surfaced early in the process, it is most important that they be identified and addressed before the decision is made. Therefore, the Department believes it is unnecessary to limit objections to issues previously raised in written comments.

*Comment:* Several respondents commented that the provision that ''incorporation of documents by reference shall not be allowed'' exceeds what is reasonable. Most respondents to this section recommended that the regulation be revised to prohibit incorporation by reference of documents outside the existing record. They assert the requirement in the interim final rule would necessitate the submittal of large volumes of material and could make faxing or e-mailing comments difficult or impossible if they could not incorporate relevant documents by reference. The respondents contend objectors who have submitted certain documents with previous comments on the project would have to re-submit them with the objection, even though incorporation by reference is a standard writing technique in both the scientific and legal professions and is standard practice by the agencies of the Federal Government, including the Forest Service.

*Response:* The Department agrees that there is no need to receive volumes of information already in the project record, but experience shows there have also been examples of reference made to studies or documents that the Agency could not locate or are not readily available to the reviewing officials. The Department has made changes at section 218.8(b) to list exceptions to the limitation on incorporating documents by reference, including Federal laws and regulations, Forest Service directives and land management plans, documents referenced by the Forest Service in the project documentation, and written comments previously provided to the Forest Service by the objector during the project comment period.

*Comment:* Some respondents requested a provision that allows for third-party intervention during the objection process so that those persons who were satisfied with the HFRA project as proposed remain involved and aware of possible changes that might occur through the objection process.

*Response:* Section 218.11 states that all meetings with objectors are open to the public. Anyone may attend these meetings and remain informed.

Section 218.9 (was section 218.8 in interim final rule) Objections set aside from review. This section defines what criteria allow the objection to be set aside and not reviewed.

*Comment:* Section 218.8(a)(6) errantly refers to section 218.7(c)(1) instead of section 218.7(d)(2).

*Response:* This error has been corrected.

Section 218.10 (was section 218.9 in interim final rule) Objection time periods and process. This section describes the time period when objections must be filed, how those time periods are computed, what evidence will be used to determine timely filing, extensions of time periods, and the timeframe for issuing written responses to objectors. In addition to the changes made in response to public comment as described below, several changes were made for consistency with changes made elsewhere in the final rule. Specifically, changes were made at sections 218.10(a), (b)(2), and (b)(3) to reflect the fact that when the Chief is the responsible official notice of the EA or final EIS is to be published in the **Federal Register** (sec. 218.5(c)).

The description of methods for determining timeliness, listed at section 218.10(c) has been changed to avoid confusion. The rule now lists four methods of submittal: By mail (that is, sending via the U.S. Postal Service), electronic transmission (e-mail or facsimile), private carrier, and hand delivery. For the methods listed at (c)(1)–(3), the date the objection is sent will be determinative; for hand delivery ((c)(4)), the Agency's date stamp of receipt will be determinative.

It should be noted that, in reference to the method listed at (c)(1), the term ''postmark'' is a term that only applies to the date stamp applied by the U.S. Postal Service, but to be abundantly clear and avoid confusion for those who may not be aware of the narrow definition of the term, the rule refers to ''U.S. Postal Service postmark.''

*Comment:* Several respondents commented on the difficulty in obtaining the newspaper of record to calculate the end of the objection

period, asserting that the newspaper of record is sometimes a very small local or rural paper that is unfamiliar or has limited distribution. Some suggested that the appropriate forest office provide a copy of the formal legal notice to anyone requesting it in an immediate and timely fashion. Some suggested that the rule require the Forest Service to notify the public of due dates. Some respondents supported the requirement.

*Response:* The approach for publishing the legal notice in the newspaper of record is consistent with the Agency practice for administrative appeals. The Department believes a consistent approach will lead to less potential for confusion and provide the most accurate method for potential objectors to know the filing deadline.

The final rule at section 218.5(b) requires the responsible official to ''promptly distribute the final environmental impact statement (FEIS) or the environmental assessment (EA) to those who have requested the document or are eligible to file an objection in accordance with § 218.7(a).'' Participants eligible to object will receive the documents and be made aware of the process and timeframe for objecting.

*Comment:* Some respondents commented that the rule states there are no time extensions for objections, yet the precedent has always been that in extenuating circumstances the public has been allowed to request an extension of the comment deadline. Some respondents felt the objection period should be 120 days long.

*Response:* One of the purposes of the HFRA is to reduce the threat of destructive wildfires while upholding environmental standards and encouraging early public input during review and planning processes. The time periods were set to keep the analysis process timely. The intent is for interested persons to participate early in the project planning process and not wait until after the decision has been issued to become involved.

*Comment:* Some respondents felt that the objector should not be required to ensure receipt of their electronically submitted objections. They expressed frustration with failures in the electronic filing system in various locations. One suggestion was that the Forest Service should acknowledge receipt of electronically submitted comments or objections.

*Response:* As a general practice, e-mail inboxes set up to receive appeals and objections are configured to provide an automated return receipt; however, as the respondents noted in their comments, these systems are not infallible and confusion has sometimes resulted. Because the Agency cannot know when an objection has been e-mailed but not received, the reference to automated electronic acknowledgement of e-mailed objections has been removed in the final rule. A statement is added at section 218.10(c) emphasizing that the responsibility for assuring timely submittal of an objection is with the objector.

Section 218.11 (was section 218.10 in interim final rule) Resolution of objections. This section describes the objection resolution process, including resolution meetings and written responses to objections.

*Comment:* Some respondents commented that the reviewing officer's response should reply to every point made by the citizens; that a point-by-point review of an objection should be required. Some felt that allowing the officer to only ''set forth the reasons for the response'' and consolidate multiple objections to answer with a single response will not meet the intent of having meaningful public participation.

*Response:* It is the intent of the Department that all issues raised through objection will be reviewed, although the responses may not necessarily address them individually. To clarify this intent the wording at section 218.11(b)(1) has been changed to specify a ''point-by-point response'' is not necessary, rather than a ''point-by-point review'' as stated in section 218.10(b)(1) of the interim final rule.

The provision stating that the reviewing officer shall ''set forth the reasons for the response'' means that the response cannot just say whether or not the objection will lead to a change, but must also explain why. Consolidating multiple objections and answering with a single response is appropriate for objections of a similar nature. One response to all objectors can be entirely appropriate. Consolidated responses allow same or similar issues to be examined and reported on efficiently. Duplicating the same response to several objectors is inefficient and not necessary.

*Comment:* Some respondents stated section 218.10 of the interim final rule allows the reviewing officer to give instructions to the responsible official that could, in effect, change the original decision. This change could have serious consequences that are not analyzed in the NEPA document, so this changed decision must be sent back for NEPA review and a new decision.

*Response:* The objection process provides a pre-decisional opportunity for administrative review. There is no ''original'' decision and, therefore, no ''new'' decision that could be issued as a result of instructions given to the responsible official. The respondents overlook that Congress selected a pre-decisional review model to encourage early participation and assure that the Agency has the flexibility to make changes and accommodations before a decision is made.

*Comment:* Some respondents commented that there is nothing in the interim final regulations to prevent the reviewing officer consolidating two divergent appeals, appointing a representative with interests quite antithetical to one or the other party, and then deciding the consolidated objections based on the participation of the appointed representative.

*Response:* Part 218 does not state that the lead objector is appointed by the reviewing officer. The Department requires, in instances where multiple names are listed on a single objection, that the objectors identify their lead objector. This requirement is found at section 218.8(c)(3) of the final rule. For communication efficiency, a lead objector is the point of contact for one objection that has been signed by multiple parties. Separate objections from different parties may be consolidated for purposes of the Agency response, but are not represented by one lead objector.

*Comment:* A respondent commented that section 218.10(b)(2) of the interim final rule appears to disallow any review of the Forest Service's response to objections. This appears to conflict with the Inspector General laws, whistleblower protection laws, and the Data Quality Act.

*Response:* This rule only defines the administrative review permitted under the HFRA. It does not affect rights under any other statutory or regulatory structure.

Section 218.12 (was section 218.11 in interim final rule) Timing of authorized hazardous fuel reduction project decision. This section describes when a responsible official may make a final decision regarding a proposed authorized hazardous fuel reduction project pursuant to the HFRA.

*Comment:* A respondent commented that section 218.11 should be specific about when implementation may begin.

*Response:* The part 218 regulations establish a pre-decisional administrative review process as required by the HFRA. Direction pertaining to implementation of a decision once it is made will be found in the NEPA regulations and Agency directives. To clarify the relationship with the NEPA regulation requirements for decisions made after preparation of a final EIS, a

reference to the relevant section of those regulations has been added at section 218.12(b) of the final rule.

*Comment:* A respondent commented that section 218.11(a) provides that the Forest Service ''may not issue a Record of Decision (ROD) or Decision Notice (DN) concerning an authorized hazardous fuels reduction project until the Reviewing Officer has responded to all pending objections.'' However, section 218.9(e) states that the ''Reviewing Officer shall issue a written response to the objector(s) within 30 days following the end of the objection-filing period.'' The respondent was concerned that the combined effect of these two provisions could be to delay issuance of a final decision of the project if the ''written response'' is not a decision on the objection and urged clarification that a ''written response'' is the final resolution of the objection.

*Response:* The ROD and DN are decision documents prepared in accordance with the NEPA, are signed by the responsible official, and are directly related to the project itself and how it will be implemented. The written objection response is the final resolution of the objection and is written by the reviewing officer. The objection process is predecisional, meaning it occurs before the project decision is written by the responsible official. This differs from the project appeal process at part 215 where appeals are made after the project decision is made. Under this rule, the EIS or EA is noticed and distributed, followed by a 30-day period for eligible parties to file objections. Objections are then resolved within 30 days through a written response, and then the project decision can be signed by the responsible official.

Section 218.13 (was section 218.12 in interim final rule) Secretary's authority. This section describes the Secretary's authority and establishes that authorized hazardous fuel reduction projects proposed by the Secretary of Agriculture or the Under Secretary for Natural Resources and Environment are not subject to the objection procedures of this part.

*Comment:* Several respondents were opposed to the exemption of hazardous fuel reduction projects proposed by the Secretary or Under Secretary of Agriculture from the provisions of this rule saying this provision is not authorized by the HFRA and ignores judicial rulings including interpretations of the Appeal Reform Act. Some respondents felt that fuel reduction projects are in relatively small local areas and approval by the Secretary or Under Secretary, in other words, an officer several levels above the local district ranger or forest supervisor, would be inappropriate.

*Response:* Nothing in the HFRA alters the Secretary's long-established authority to make decisions affecting the Forest Service. The Department's position has always been that secretarial decisions are not subject to an administrative review or appeal process under any of the Forest Service's administrative review systems, and there is no indication that Congress intended to make such a change through the HFRA.

*Comment:* A respondent stated that section 218.12 of the interim final rule is not clear because it states that authorized hazardous fuel reduction projects ''proposed'' by the Secretary of Agriculture or the Under Secretary for Natural Resources and Environment are not subject to the objection procedures of part 218. The respondent questioned whether it means that a project is exempt from the objection procedure if the Under Secretary merely proposes a project but does not make the final decision.

*Response:* The Secretary or Under Secretary would be the responsible official for any authorized hazardous fuel reduction projects they propose and would, therefore, be the decisionmaker for those proposals.

Section 218.14 (was section 218.13 in interim final rule) Judicial proceedings. This section describes when judicial proceedings are appropriate.

*Comment:* A respondent commented that judicial review must not be artificially limited, that the scope of judicial review should be for Congress and the courts to decide, and that Congress did not create any new limitations with the HFRA.

*Response:* For purposes of these regulations, section 105(c)(1) of the HFRA provides that civil action challenging an authorized hazardous fuel reduction project in Federal district court may only be brought if the person has exhausted their administrative remedies by using the administrative review process established in the Act and part 218. The Act also specifies (105(c)(2)) that an issue may be considered during the judicial review of an authorized hazardous fuel reduction project only if the issue was raised in the administrative review processes previously described. Exceptions to the requirement of exhausting the administrative review process before seeking judicial review are provided in the act at section 105(c)(3). Section 218.13 of the interim final rule is fully consistent with the exhaustion requirements established by Congress when it enacted the HFRA.

Section 218.15 (was section 218.14 in interim final rule) Information collection requirements. This section explains that the rule contains information collection requirements as defined in 5 CFR part 1320 by specifying the information that objectors must supply in an objection.

*Comment:* A respondent suggested that this section should also contain a stipulation that all Agency records on any of these projects must be immediately available for public inspection and investigation.

*Response:* Federal regulations at 5 CFR part 1320, Controlling Paperwork Burdens on the Public, implement the provisions of the Paperwork Reduction Act of 1995, as amended (44 U.S.C. 3501, *et seq.*) concerning collections of information from the public. The regulation is designed to reduce, minimize, and control the burden on the public associated with public information collections. The Office of Management and Budget (OMB) approves qualifying collections of information from the public, and the purpose of section 218.15 is simply to disclose that the information collection requirements associated with filing objections are subject to the requirements of 5 CFR part 1320 and have been assigned a control number by OMB.

The availability to the public of records associated with the planning and analysis of HFRA-authorized projects are governed by the requirements of the NEPA regulations (40 CFR parts 1500–1508), these regulations (36 CFR part 218), and the Freedom of Information Act.

Section 218.16 (was section 218.15 in interim final rule) Applicability and effective date. This section sets out the effective date of this final rule. There were no comments on this section.

## Regulatory Certifications

### *Regulatory Impact*

This final rule has been reviewed under USDA procedures and Executive Order 12866 on Regulatory Planning and Review. It has been determined that this is not a significant rule. This final rule will not have an annual effect of $100 million or more on the economy nor adversely affect productivity, competition, jobs, the environment, public health or safety, nor State or local governments. This final rule will not interfere with an action taken or planned by another agency nor raise new legal or policy issues. Finally, this action will not alter the budgetary

impact of entitlements, grants, user fees, or loan programs, or the rights and obligations of recipients of such programs.

Moreover, this final rule has been considered in light of the Regulatory Flexibility Act (5 U.S.C. 601 *et seq.*), and it has been determined that this action will not have a significant economic impact on a substantial number of small entities as defined by that act. Therefore, a regulatory flexibility analysis is not required for this final rule.

*Environmental Impacts*

This final rule establishes a predecisional administrative review process for authorized hazardous fuel reduction projects on National Forest System lands pursuant to section 105 of the Healthy Forests Restoration Act of 2003. Section 31.1b of Forest Service Handbook 1909.15 (57 FR 43168; September 18, 1992) excludes from documentation in an EA or EIS ''rules, regulations, or policies to establish Service-wide administrative procedures, program processes, or instruction.'' This final rule clearly falls within this category of actions, and no extraordinary circumstances exist that would require preparation of an EA or an EIS.

*Energy Effects*

This final rule has been reviewed under Executive Order 13211 of May 18, 2001, ''Actions Concerning Regulations That Significantly Affect Energy Supply, Distribution, or Use.'' It has been determined that this rule does not constitute a significant energy action as defined in the Executive order.

*Controlling Paperwork Burdens on the Public*

This final rule represents an information collection requirement as defined in 5 CFR part 1320, Controlling Paperwork Burdens on the Public. In accordance with those rules and the Paperwork Reduction Act of 1995, as amended (44 U.S.C. 3501, *et seq.*), the Forest Service was granted approval from the Office of Management and Budget (OMB) on December 18, 2003, for the new information collection required by the interim final rule. That approval has been extended twice, most recently on December 28, 2007. The current approval expires on December 31, 2010. The information to be collected from those who choose to participate in the predecisional administrative review process for hazardous fuel reduction projects authorized under the HFRA is the minimum needed for the reviewing officer to make an informed decision on an objection filed under the HFRA.

*Federalism*

The Agency has considered this final rule under the requirements of Executive Order 13132, Federalism, and Executive Order 12875, Government Partnerships. The Agency has made a preliminary assessment that the final rule conforms with the federalism principles set out in these Executive orders; would not impose any compliance costs on the States; and would not have substantial direct effects on the States, on the relationship between the national Government and the States, or on the distribution of power and responsibilities among the various levels of government. Comments received on the interim final rule were considered, and the Agency determined that no additional consultation was needed with State and local governments prior to adopting the final rule.

*Consultation and Coordination With Indian Tribal Governments*

This final rule does not have Tribal implications as defined in Executive Order 13175, Consultation and Coordination with Indian Tribal Governments, and, therefore, advance consultation with tribes is not required.

*No Takings Implications*

This final rule has been analyzed in accordance with the principles and criteria contained in Executive Order 12630. It has been determined that the final rule does not pose the risk of a taking of private property.

*Civil Justice Reform*

This final rule has been reviewed under Executive Order 12988 on civil justice reform. After adoption of this final rule, (1) all State and local laws and regulations that conflict with this final rule or that impede its full implementation will be preempted; (2) no retroactive effect will be given to this final rule; and (3) it will not require administrative proceedings before parties may file suit in court challenging its provisions.

*Unfunded Mandates*

Pursuant to Title II of the Unfunded Mandates Reform Act of 1995 (2 U.S.C. 1531–1538), which the President signed into law on March 22, 1995, the Agency has assessed the effects of this final rule on State, local, and Tribal governments and the private sector. This final rule does not compel the expenditure of $100 million or more by any State, local, or Tribal governments or anyone in the private sector. Therefore, a statement under section 202 of the act is not required.

**List of Subjects**

*36 CFR Part 215*

Administrative practice and procedure, National forests.

*36 CFR Part 218*

Administrative practice and procedure, National forests.

■ Therefore, for the reasons set forth in the preamble, the Forest Service adopts as final the interim final rule published at 69 FR 1529, January 9, 2004, with the following changes:

## PART 215—NOTICE, COMMENT, AND APPEAL PROCEDURES FOR NATIONAL FOREST SYSTEM PROJECTS AND ACTIVITIES

■ 1. The authority citation for part 215 continues to read as follows:

**Authority:** 16 U.S.C. 472, 551; sec. 322, Public Law 102–381 (Appeals Reform Act), 106 Stat. 1419 (16 U.S.C. 1612 note).

■ 2. Amended § 215.3 by revising paragraph (a) to read as follows:

**§ 215.3 Proposed actions subject to legal notice and opportunity to comment.**

* * * * *

(a) Proposed projects and activities implementing land management plans (§ 215.2) for which an environmental assessment (EA) is prepared, except hazardous fuel reduction projects conducted under provisions of the Healthy Forests Restoration Act (HFRA), as set out at part 218, subpart A, of this title.

* * * * *

## PART 218—PREDECISIONAL ADMINISTRATIVE REVIEW PROCESSES

■ 3. The authority citation for part 218 continues to read as follows:

**Authority:** Public Law 108–148, 117 Stat. 1887 (Healthy Forests Restoration Act of 2003).

■ 4. Revise subpart A to part 218 to read as follows:

### Subpart A—Predecisional Administrative Review Process for Hazardous Fuel Reduction Projects Authorized by the Healthy Forests Restoration Act of 2003

Sec.

218.1 Purpose and scope.
218.2 Definitions.
218.3 Authorized hazardous fuel reduction projects subject to objection.

218.4 Authorized hazardous fuel reduction projects not subject to objection.
218.5 Giving notice of proposed authorized hazardous fuel reduction projects subject to objection.
218.6 Reviewing officer.
218.7 Who may file an objection.
218.8 Filing an objection.
218.9 Objections set aside from review.
218.10 Objection time periods and process.
218.11 Resolution of objections.
218.12 Timing of authorized hazardous fuel reduction project decision.
218.13 Secretary's authority.
218.14 Judicial proceedings.
218.15 Information collection requirements.
218.16 Applicability and effective date.

### § 218.1 Purpose and scope.

This subpart establishes a predecisional administrative review (hereinafter referred to as ''objection'') process for proposed authorized hazardous fuel reduction projects as defined in the Healthy Forests Restoration Act of 2003 (HFRA). The objection process is the sole means by which administrative review of a proposed authorized hazardous fuel reduction project on National Forest System land may be sought. This subpart identifies who may file objections to those proposed authorized hazardous fuel reduction projects, the responsibilities of the participants in an objection, and the procedures that apply for review of the objection.

### § 218.2 Definitions.

*Address:* An individual's or organization's current physical mailing address. An e-mail address is not sufficient.

*Authorized hazardous fuel reduction project:* A hazardous fuel reduction project authorized by the Healthy Forests Restoration Act of 2003 (HFRA).

*Comments:* Specific written comments related to a proposed authorized hazardous fuel reduction project pursuant to the HFRA.

*Decision notice (DN):* A concise written record of a responsible official's decision based on an environmental assessment and a finding of no significant impact (FONSI) (40 CFR 1508.13; Forest Service Handbook (FSH) 1909.15, chapter 40).

*Environmental assessment (EA):* A public document that provides sufficient evidence and analysis for determining whether to prepare an environmental impact statement (EIS) or a finding of no significant impact (FONSI), aids an agency's compliance with the National Environmental Policy Act (NEPA) when no EIS is necessary, and facilitates preparation of a statement when one is necessary (40 CFR 1508.9; FSH 1909.15, Chapter 40).

*Environmental impact statement (EIS):* A detailed written statement as required by section 102(2)(C) of the National Environmental Policy Act (NEPA) of 1969 (40 CFR 1508.11; FSH 1909.15, Chapter 20).

*Forest Service line officer:* A Forest Service official who serves in a direct line of command from the Chief and who has the delegated authority to make and execute decisions approving hazardous fuel reduction projects subject to this subpart.

*Lead objector:* For an objection submitted with multiple individuals and/or organizations listed, the individual or organization identified to represent all other objectors for the purposes of communication, written or otherwise, regarding the objection.

*Name:* The first and last name of an individual or the name of an organization. An electronic username is insufficient for identification of an individual or organization.

*National Forest System land:* All lands, water, or interests therein administered by the Forest Service (§ 251.51).

*Newspaper(s) of record:* Those principal newspapers of general circulation annually identified in a list and published in the **Federal Register** by each regional forester to be used for publishing notices of projects and activities implementing land management plans.

*Objection:* The written document filed with a reviewing officer by an individual or organization seeking predecisional administrative review of a proposed authorized hazardous fuel reduction project as defined in the HFRA.

*Objection period:* The 30-calendar-day period following publication of the legal notice in the newspaper of record of an environmental assessment (EA) or final environmental impact statement (EIS) for a proposed authorized hazardous fuel reduction project during which an objection may be filed with the reviewing officer. When the Chief is the responsible official the objection period begins following publication of a notice in the **Federal Register**.

*Objection process:* Those procedures established for predecisional administrative review of proposed authorized hazardous fuel reduction projects subject to the HFRA.

*Objector:* An individual or organization filing an objection who submitted comments specific to the proposed authorized hazardous fuel reduction project during scoping or other opportunity for public comment as described in the HFRA. The use of the term ''objector'' applies to all persons who meet eligibility requirements associated with the filed objection (§ 218.7(a)).

*Record of decision (ROD):* A document signed by a responsible official recording a decision that was preceded by preparation of an environmental impact statement (EIS) (40 CFR 1505.2; FSH 1909.15, Chapter 20).

*Responsible official:* The Forest Service employee who has the delegated authority to make and implement a decision approving proposed authorized hazardous fuel reduction projects subject to this subpart.

*Reviewing officer:* The United States Department of Agriculture (USDA) or Forest Service official having the delegated authority and responsibility to review an objection filed under this subpart. The reviewing officer is the next higher level supervisor of the responsible official.

### § 218.3 Authorized hazardous fuel reduction projects subject to objection.

(a) Only authorized hazardous fuel reduction projects as defined by the HFRA, section 101(2), occurring on National Forest System lands that have been analyzed in an EA or EIS are subject to this subpart. Authorized hazardous fuel reduction projects processed under the provisions of the HFRA are not subject to the notice, comment, and appeal provisions set forth in part 215 of this chapter.

(b) When authorized hazardous fuel reduction projects are approved contemporaneously with a plan amendment that applies only to that project, the objection process of this part applies to both the plan amendment and the project.

### § 218.4 Authorized hazardous fuel reduction projects not subject to objection.

Projects are not subject to objection when no comments (§ 218.2) are received during the opportunity for public comment (§ 218.7(a)). The responsible official must issue an explanation with the record of decision (ROD) or decision notice (DN) that the project was not subject to objection.

### § 218.5 Giving notice of proposed authorized hazardous fuel reduction projects subject to objection.

(a) In addition to the notification required in paragraph (c) of this section, the responsible official should disclose during scoping and in the EA or EIS that the project is authorized under the HFRA and will therefore be subject to the objection procedure at 36 CFR 218, in lieu of the appeal procedure at 36 CFR 215.

(b) The responsible official must promptly distribute the final EIS or the EA to those who have requested the document or are eligible to file an objection in accordance with § 218.7(a).

(c) Upon completion and distribution mailing of the final EIS or EA, legal notice of the opportunity to object to a proposed authorized hazardous fuel reduction project must be published in the applicable newspaper of record identified (218.2) for each National Forest System unit. When the Chief is the responsible official, notice must be published in the **Federal Register**. The legal notice or **Federal Register** notice must

(1) Include the name of the proposed authorized hazardous fuel reduction project, a concise description of the preferred alternative and any proposed land management plan amendments, name and title of the responsible official, name of the forest and/or district on which the proposed authorized hazardous fuel reduction project will occur, instructions for obtaining a copy of the final EIS or EA, and instructions on how to obtain additional information on the proposed authorized hazardous fuel reduction project.

(2) State that the proposed authorized hazardous fuel reduction project is subject to the objection process pursuant to 36 CFR part 218, subpart A, and include the following:

(i) Name and address of the reviewing officer with whom an objection is to be filed. The notice must specify a street, postal, fax, and e-mail address, the acceptable format(s) for objections filed electronically, and the reviewing officer's office business hours for those filing hand-delivered objections.

(ii) A statement that objections will be accepted only from those who have previously submitted written comments specific to the proposed authorized hazardous fuel reduction project during scoping or other opportunity for public comment in accordance with § 218.7(a).

(iii) A statement that the publication date of the legal notice in the newspaper of record or **Federal Register** notice is the exclusive means for calculating the time to file an objection (§ 218.10(a)), and that those wishing to object should not rely upon dates or timeframe information provided by any other source. A specific date must not be included in the notice.

(iv) A statement that an objection, including attachments, must be filed (regular mail, fax, e-mail, hand-delivery, express delivery, or messenger service) with the appropriate reviewing officer (§ 218.8) within 30 days of the date of publication of the legal notice for the objection process. It should also be stated that incorporation of documents by reference is permitted only as provided for at § 218.8(b).

(v) A statement describing the minimum content requirements of an objection (§ 218.8(c)).

(vi) A statement that the proposed authorized hazardous fuel reduction project is not subject to the notice, comment, and appeal procedures found at part 215 of this chapter (§ 218.3).

(d) *Publication.* Through notice published annually in the **Federal Register**, each regional forester must advise the public of the newspaper(s) of record utilized for publishing legal notice required by this subpart.

### § 218.6 Reviewing officer.

The reviewing officer determines procedures to be used for processing objections when the procedures are not specifically described in this subpart, including such procedures as needed to be compatible to the extent practicable, with the administrative review processes of other Federal agencies, for authorized hazardous fuel reduction projects proposed jointly with other agencies. Such determinations are not subject to further administrative review.

### § 218.7 Who may file an objection.

(a) Individuals and organizations who have submitted specific written comments related to the proposed authorized hazardous fuel reduction project during the opportunity for public comment provided during preparation of an EA or EIS for the proposed authorized hazardous fuel reduction project as characterized in section 104(g) of the HFRA may file an objection. For proposed authorized hazardous fuel reduction projects described in a draft EIS, such opportunity for public comment will be fulfilled during scoping, by the comment period on the draft EIS in accordance with procedures in 40 CFR 1506.10, and any other periods public comment is specifically requested. For proposed authorized hazardous fuel reduction projects described in an EA, such opportunity for public comment will be fulfilled during scoping or any other periods public comment is specifically requested.

(b) Comments received from an authorized representative(s) of an organization are considered those of the organization only. Individual members of that organization do not meet objection eligibility requirements solely on the basis of membership in an organization. A member or an individual must submit comments independently in order to be eligible to file an objection in an individual capacity.

(c) When an objection lists multiple individuals or organizations, each individual or organization must meet the requirements of paragraph (a) of this section. Individuals or organizations listed on an objection that do not meet eligibility requirements must not be considered objectors. Objections from individuals or organizations that do not meet the requirements of paragraph (a) must not be accepted. This must be documented in the objection record.

(d) Federal agencies may not file objections.

(e) Federal employees who otherwise meet the requirements of this subpart for filing objections in a non-official capacity must comply with Federal conflict of interest statutes at 18 U.S.C. 202–209 and with employee ethics requirements at 5 CFR part 2635. Specifically, employees must not be on official duty nor use Government property or equipment in the preparation or filing of an objection. Further, employees must not incorporate information unavailable to the public, such as Federal agency documents that are exempt from disclosure under the Freedom of Information Act (5 U.S.C. 552(b)).

### § 218.8 Filing an objection.

(a) Objections must be filed with the reviewing officer in writing. All objections must be open to public inspection during the objection process.

(b) Incorporation of documents by reference is not allowed, except for the following list of items which may be provided by including date, page, and section of the cited document. All other documents must be included with the objection.

(1) All or any part of a Federal law or regulation,

(2) Forest Service directives and land management plans,

(3) Documents referenced by the Forest Service in the proposed HFRA project subject to objection,

(4) Comments previously provided to the Forest Service by the objector during the proposed HFRA project comment period.

(c) At a minimum, an objection must include the following:

(1) Objector's name and address (§ 218.2), with a telephone number, if available;

(2) Signature or other verification of authorship upon request (a scanned signature for electronic mail may be filed with the objection);

(3) When multiple names are listed on an objection, identification of the lead objector (§ 218.2). Verification of the

identity of the lead objector must be provided upon request;

(4) The name of the proposed authorized hazardous fuel reduction project, the name and title of the responsible official, and the name(s) of the national forest(s) and/or ranger district(s) on which the proposed authorized hazardous fuel reduction project will be implemented; and,

(5) Sufficient narrative description of those aspects of the proposed authorized hazardous fuel reduction project addressed by the objection, specific issues related to the proposed authorized hazardous fuel reduction project, and suggested remedies that would resolve the objection.

**§ 218.9 Objections set aside from review.**

(a) The reviewing officer must set aside and not review an objection when one or more of the following applies:

(1) Objections are not filed in a timely manner (§§ 218.5(c)(2)(iv), 218.10(c)).

(2) The proposed project is not subject to the objection procedures of this subpart (§§ 218.3, 218.4).

(3) The individual or organization did not submit written comments during scoping or other opportunity for public comment (§ 218.7(a)).

(4) The objection does not provide sufficient information as required by § 218.7(b) through (d) for the reviewing officer to review.

(5) The objector withdraws the objection.

(6) An objector's identity is not provided or cannot be determined from the signature (written or electronically scanned) and a reasonable means of contact is not provided (§ 218.8(c)(2)).

(7) The objection is illegible for any reason, including submissions in an electronic format different from that specified in the legal notice.

(b) The reviewing officer must give written notice to the objector and the responsible official when an objection is set aside from review and must state the reasons for not reviewing the objection. If the objection is set aside from review for reasons of illegibility or lack of a means of contact, the reasons must be documented in the project record.

**§ 218.10 Objection time periods and process.**

(a) *Time to file an objection.* Written objections, including any attachments, must be filed with the reviewing officer within 30 days following the publication date of the legal notice of the EA or final EIS in the newspaper of record or the publication date of the notice in the **Federal Register** when the Chief is the responsible official (§ 218.5(c)). It is the responsibility of objectors to ensure that their objection is received in a timely manner.

(b) *Computation of time periods.* (1) All time periods are computed using calendar days, including Saturdays, Sundays, and Federal holidays. However, when the time period expires on a Saturday, Sunday, or Federal holiday, the time is extended to the end of the next Federal working day as stated in the legal notice or to the end of the calendar day (11:59 p.m. in the time zone of the receiving office) for objections filed by electronic means such as e-mail or facsimile machine.

(2) The day after publication of the legal notice for this subpart of the EA or final EIS in the newspaper of record or **Federal Register** (§ 218.5(c)) is the first day of the objection-filing period.

(3) The publication date of the legal notice of the EA or final EIS in the newspaper of record or, when the Chief is the responsible official, the **Federal Register**, is the exclusive means for calculating the time to file an objection. Objectors may not rely on dates or timeframe information provided by any other source.

(c) *Evidence of timely filing.* It is the objector's responsibility to ensure timely filing of an objection. Timeliness must be determined by the following indicators:

(1) The date of the U.S. Postal Service postmark;

(2) The electronically generated date and time for e-mail and facsimiles;

(3) The shipping date for delivery by private carrier; or

(4) The official agency date stamp showing receipt of hand delivery.

(d) *Extensions.* Time extensions are not permitted.

(e) *Other timeframes.* The reviewing officer must issue a written response to the objector(s) concerning their objection(s) within 30 days following the end of the objection-filing period.

**§ 218.11 Resolution of objections.**

(a) *Meetings.* Prior to the issuance of the reviewing officer's written response, either the reviewing officer or the objector may request to meet to discuss issues raised in the objection and potential resolution. The reviewing officer has the discretion to determine whether or not adequate time remains in the review period to make a meeting with the objector practical.'' All meetings are open to the public.

(b) *Response to objections.* (1) A written response must set forth the reasons for the response, but need not be a point-by-point response and may contain instructions to the responsible official, if necessary. In cases involving more than one objection to a proposed authorized hazardous fuel reduction project, the reviewing officer may consolidate objections and issue one or more responses.

(2) There must be no further review from any other Forest Service or USDA official of the reviewing officer's written response to an objection.

**§ 218.12 Timing of authorized hazardous fuel reduction project decision.**

(a) The responsible official may not issue a ROD or DN concerning an authorized hazardous fuel reduction project subject to the provisions of this subpart until the reviewing officer has responded to all pending objections.

(b) When no objection is filed within the 30-day time period, the reviewing officer must notify the responsible official and approval of the authorized hazardous fuel reduction project in a ROD in accordance with 40 CFR 1506.10, or DN may occur on, but not before, the fifth business day following the end of the objection-filing period.

**§ 218.13 Secretary's authority.**

(a) Nothing in this section shall restrict the Secretary of Agriculture from exercising any statutory authority regarding the protection, management, or administration of National Forest System lands.

(b) Authorized hazardous fuel reduction projects proposed by the Secretary of Agriculture or the Under Secretary, Natural Resources and Environment, are not subject to the procedures set forth in this subpart. A decision by the Secretary or Under Secretary constitutes the final administrative determination of the Department of Agriculture.

**§ 218.14 Judicial proceedings.**

The objection process set forth in this subpart fully implements Congress' design for a predecisional administrative review process for proposed hazardous fuel reduction projects authorized by the HFRA. These procedures present a full and fair opportunity for concerns to be raised and considered on a project-by-project basis. Individuals and groups must structure their participation so as to alert the local agency officials making particular land management decisions of their positions and contentions. Further, any filing for Federal judicial review of an authorized hazardous fuel reduction project is premature and inappropriate unless the plaintiff has submitted specific written comments relating to the proposed action during scoping or other opportunity for public comment as prescribed by the HFRA, and the plaintiff has challenged the

authorized hazardous fuel reduction project by exhausting the administrative review process set out in this subpart. Further, judicial review of hazardous fuel reduction projects that are subject to these procedures is strictly limited to those issues raised by the plaintiff's submission during the objection process, except in exceptional circumstances such as where significant new information bearing on a specific claim only becomes available after conclusion of the administrative review.

**§ 218.15 Information collection requirements.**

The rules of this subpart specify the information that objectors must provide in an objection to a proposed authorized hazardous fuel reduction project as defined in the HFRA (§ 218.8). As such, these rules contain information collection requirements as defined in 5 CFR part 1320. These information requirements are assigned OMB Control Number 0596–0172.

**§ 218.16 Applicability and effective date.**

The provisions of this subpart are effective as of October 17, 2008 and apply to all proposed authorized hazardous fuel reduction projects conducted under the provisions of the HFRA for which scoping begins on or after October 17, 2008.

Dated: September 10, 2008.

**Mark Rey,**

*Under Secretary, NRE.*

[FR Doc. E8–21751 Filed 9–16–08; 8:45 am]

**BILLING CODE 3410–11–P**

## ENVIRONMENTAL PROTECTION AGENCY

## 40 CFR Part 52

**[EPA–R06–OAR–2006–0867; FRL–8715–7]**

## Approval and Promulgation of Air Quality Implementation Plans; Texas; Control of Air Pollution by Permits for New Construction or Modification

**AGENCY:** Environmental Protection Agency (EPA).

**ACTION:** Final rule.

**SUMMARY:** EPA is approving a revision to the Texas State Implementation Plan (SIP), submitted by the Texas Commission on Environmental Quality (TCEQ) on October 9, 2006. The SIP revision EPA is approving would require decreased newspaper notice for proposed air quality Standard Permits with statewide applicability to the following metropolitan areas: Austin, Dallas, Houston, and any other regional newspapers the TCEQ Executive Director designates on a case-by-case basis. TCEQ will publish notice of a proposed air quality Standard Permit in the *Texas Register* and will issue a press release. In addition, TCEQ may also use electronic means to inform state and local officials of a proposed air quality Standard Permit. EPA is approving this revision pursuant to section 110 of the Federal Clean Air Act (Act).

**DATES:** This rule is effective on *October 17, 2008*.

**ADDRESSES:** The EPA has established a docket for this action under Docket ID Number EPA–R06–OAR–2006–0867. All documents in the docket are listed on the *www.regulations.gov* Web site. Although listed in the index, some information is not publicly available, e.g., CBI or other information whose disclosure is restricted by statute. Certain other material, such as copyrighted material, is not placed on the internet and will be publicly available only in hard copy form. Publicly available docket materials are available either electronically through *www.regulations.gov* or in hard copy at the Air Permits Section (6PD–R), Environmental Protection Agency, 1445 Ross Avenue, Suite 700, Dallas, Texas 75202–2733. The file will be made available by appointment for public inspection in the Region 6 FOIA Review Room between the hours of 8:30 a.m. and 4:30 p.m. weekdays except for legal holidays. Contact the person listed in the **FOR FURTHER INFORMATION CONTACT** paragraph below to make an appointment. If possible, please make the appointment at least two working days in advance of your visit. There will be a 15 cent per page fee for making photocopies of documents. On the day of the visit, please check in at the EPA Region 6 reception area at 1445 Ross Avenue, Suite 700, Dallas, Texas.

The State submittal is also available for public inspection at the State Air Agency listed below during official business hours by appointment:

Texas Commission on Environmental Quality, Office of Air Quality, 12124 Park 35 Circle, Austin, Texas 78753.

**FOR FURTHER INFORMATION CONTACT:** Mr. Stanley M. Spruiell, Air Permits Section (6PD–R), Environmental Protection Agency, Region 6, 1445 Ross Avenue, Suite 700, Dallas, Texas 75202–2733, telephone (214) 665–7212; fax number 214–665–7263; e-mail address *spruiell.stanley@epa.gov*.

**SUPPLEMENTARY INFORMATION:** Throughout this document wherever ''we,'' ''us,'' or ''our'' is used, we mean the EPA.

**Outline**

I. What Action Is EPA Taking?
II. Final Action
III. Statutory and Executive Order Reviews

### I. What Action Is EPA Taking?

EPA is approving a revision to 30 Texas Administrative Code (TAC), Chapter 116 (Control of Air Pollution by Permits for New Construction or Modification), Subchapter F (Standard Permits), section 116.603 (Public Participation in Issuance of Standard Permits). TCEQ adopted a revision to this section on September 20, 2006, and submitted the proposed SIP revision to EPA on October 9, 2006 for approval.

The SIP revision requires that any proposed air quality Standard Permit with statewide applicability be published in the daily newspaper of largest general circulation within each of the following metropolitan areas: Austin, Dallas, Houston, and any other regional newspaper designated by the Executive Director on a case-by-case basis. The proposed revision also requires TCEQ to publish notice of a proposed Standard Permit in the *Texas Register* and issue a press release. However, the proposed revision changes the current EPA SIP-approved rule as it no longer requires TCEQ to issue newspaper notices for proposed Standard Permits with statewide applicability in the following metropolitan areas: Amarillo, Corpus Christi, El Paso, the Lower Rio Grande Valley, Lubbock, the Permian Basin, or Tyler. EPA approves the revision as meeting the federal requirements of the Act, Public Availability of Information, which requires ''. . . [n]otice by prominent advertisement in the area affected * * *.''

On May 15, 2008 (73 FR 28071), we published our proposed approval of this SIP revision. The proposal provided detailed information about the Texas SIP revision that we are approving today. The proposal also provided a detailed analysis of our rationale for approving the Texas SIP revision. In the proposal, we provided opportunity for public comment on the proposed action. The comment period for this proposed rulemaking ended June 16, 2008. We received no comments, adverse or otherwise, on the proposed rulemaking. We are therefore finalizing our proposed approval without changes. For more details on this submittal, please refer to the proposed rulemaking and to the Technical Support Document, which is in the docket for this action.

For the reasons discussed in the proposed rulemaking and in the Technical Support Document, EPA believes that the revision to Section

116.603 continues to ensure that the entire State of Texas is provided with adequate public notice of any proposed Standard Permit with statewide applicability and ensures that citizens in Texas are afforded the opportunity to comment on the proposed Standard Permit.

Section 110(l) of the CAA states that EPA cannot approve a SIP revision if the revision would interfere with any applicable requirements concerning attainment and reasonable further progress towards attainment of the National Ambient Air Quality Standards (NAAQS) or any other applicable requirements of the Act. Our review of the Texas SIP submittal discussed in this notice and the Technical Support Document demonstrated that although public notice for Standard Permits with Statewide applicability will be published in fewer newspapers, EPA believes that this SIP revision continues to meet the Federal requirements relating to public notice for new and modified sources. For these reasons we believe that the revision will not interfere with any applicable requirements concerning attainment and reasonable further progress towards attainment of the NAAQS or any other applicable requirements of the Act.

## II. Final Action

For the reasons discussed above, EPA is approving the changes to 30 TAC 116.603 (Public Participation in Issuance of Standard Permits) submitted October 9, 2006, as a revision to the Texas SIP.

## III. Statutory and Executive Order Reviews

Under the Clean Air Act, the Administrator is required to approve a SIP submission that complies with the provisions of the Act and applicable Federal regulations. 42 U.S.C. 7410(k); 40 CFR 52.02(a). Thus, in reviewing SIP submissions, EPA's role is to approve state choices, provided that they meet the criteria of the Clean Air Act. Accordingly, this action merely approves state law as meeting Federal requirements and does not impose additional requirements beyond those imposed by state law. For that reason, this final action:

- Is not a ''significant regulatory action'' subject to review by the Office of Management and Budget under Executive Order 12866 (58 FR 51735, October 4, 1993);
- Does not impose an information collection burden under the provisions of the Paperwork Reduction Act (44 U.S.C. 3501 *et seq.*);
- Is certified as not having a significant economic impact on a substantial number of small entities under the Regulatory Flexibility Act (5 U.S.C. 601 *et seq.*);
- Does not contain any unfunded mandate or significantly or uniquely affect small governments, as described in the Unfunded Mandates Reform Act of 1995 (Pub. L. 104–4);
- Does not have Federalism implications as specified in Executive Order 13132 (64 FR 43255, August 10, 1999);
- Is not an economically significant regulatory action based on health or safety risks subject to Executive Order 13045 (62 FR 19885, April 23, 1997);
- Is not a significant regulatory action subject to Executive Order 13211 (66 FR 28355, May 22, 2001);
- Is not subject to requirements of Section 12(d) of the National Technology Transfer and Advancement Act of 1995 (15 U.S.C. 272 note) because application of those requirements would be inconsistent with the Clean Air Act; and
- Does not provide EPA with the discretionary authority to address, as appropriate, disproportionate human health or environmental effects, using practicable and legally permissible methods, under Executive Order 12898 (59 FR 7629, February 16, 1994).

In addition, this rule does not have tribal implications as specified by Executive Order 13175 (65 FR 67249, November 9, 2000), because the SIP is not approved to apply in Indian country located in the state, and EPA notes that it will not impose substantial direct costs on tribal governments or preempt tribal law.

The Congressional Review Act, 5 U.S.C. 801 *et seq.*, as added by the Small Business Regulatory Enforcement Fairness Act of 1996, generally provides that before a rule may take effect, the agency promulgating the rule must submit a rule report, which includes a copy of the rule, to each House of the Congress and to the Comptroller General of the United States. EPA will submit a report containing this rule and other required information to the U.S. Senate, the U.S. House of Representatives, and the Comptroller General of the United States prior to publication of the rule in the **Federal Register**. A major rule cannot take effect until 60 days after it is published in the **Federal Register**. This action is not a ''major rule'' as defined by 5 U.S.C. 804(2).

Under section 307(b)(1) of the Clean Air Act, petitions for judicial review of this action must be filed in the United States Court of Appeals for the appropriate circuit by *November 17, 2008.* Filing a petition for reconsideration by the Administrator of this final rule does not affect the finality of this rule for the purposes of judicial review nor does it extend the time within which a petition for judicial review may be filed, and shall not postpone the effectiveness of such rule or action. This action may not be challenged later in proceedings to enforce its requirements. (See section 307(b)(2).)

## List of Subjects in 40 CFR Part 52

Environmental protection, Air pollution control, Carbon monoxide, Incorporation by reference, Intergovernmental relations, Lead, Nitrogen dioxide, Ozone, Particulate matter, Reporting and recordkeeping requirements, Sulfur oxides, Volatile organic compounds.

Dated: September 2, 2008.

**Richard E. Greene,**

*Regional Administrator, Region 6.*

■ 40 CFR part 52 is amended as follows:

## PART 52—[AMENDED]

■ 1. The authority citation for part 52 continues to read as follows:

**Authority:** 42 U.S.C. 7401 *et seq.*

## Subpart SS—Texas

■ 2. The table in § 52.2270(c) entitled ''EPA-Approved Regulations in the Texas SIP'' is amended by revising the entry for Section 116.603 to read as follows:

### § 52.2270 Identification of plan.

* * * * *

(c) * * *

EPA-APPROVED REGULATIONS IN THE TEXAS SIP

| State citation | Title/subject | State approval/submittal date | EPA approval date | Explanation |
|---|---|---|---|---|
| * | * | * | * | * |
| **Chapter 116 (Reg 6)—Control of Air Pollution by Permits for New Construction or Modification** | | | | |
| * | * | * | * | * |
| **Subchapter F—Standard Permits** | | | | |
| * | * | * | * | * |
| Section 116.603 ..... | Public Participation in Issuance of Standard Permits. | 09/20/06 | 9/17/08 [Insert FR page number where document begins]. | |
| * | * | * | * | * |

[FR Doc. E8–21490 Filed 9–16–08; 8:45 am]

**BILLING CODE 6560–50–P**

## ENVIRONMENTAL PROTECTION AGENCY

## 40 CFR Part 55

**[EPA–R01–OAR–2008–0112; A–1–FRL–8709–4]**

## Outer Continental Shelf Air Regulations Consistency Update for Massachusetts

**AGENCY:** Environmental Protection Agency (EPA).

**ACTION:** Final rule.

**SUMMARY:** EPA is finalizing the updates of the Outer Continental Shelf (OCS) Air Regulations proposed in the **Federal Register** on February 27, 2008. Requirements applying to OCS sources located within 25 miles of states' seaward boundaries must be updated periodically to remain consistent with the requirements of the corresponding onshore area (COA), as mandated by section 328(a)(1) of the Clean Air Act Amendments of 1990 (the Act). The portion of the OCS air regulations that is being updated pertains to the requirements for OCS sources in the Commonwealth of Massachusetts. The intended effect of approving the OCS requirements for the Commonwealth of Massachusetts is to regulate emissions from OCS sources in accordance with the requirements onshore.

**DATES:** *Effective Date:* This rule is effective on October 17, 2008. The incorporation by reference of certain publications listed in this rule is approved by the Director of the Federal Register as of October 17, 2008.

**ADDRESSES:** EPA has established a docket for this action under Docket Identification No. EPA–R01–OAR–2008–0112. All documents in the docket are listed on the *www.regulations.gov* Web site. Although listed in the index, some information is not publicly available, i.e., CBI or other information whose disclosure is restricted by statute. Certain other material, such as copyrighted material, is not placed on the Internet and will be publicly available only in hard copy form. Publicly available docket materials are available either electronically through *www.regulations.gov* or in hard copy at the Office of Ecosystem Protection, U.S. Environmental Protection Agency, EPA New England Regional Office, One Congress Street, Suite 1100, Boston, MA. EPA requests that if at all possible, you contact the contact listed in the **FOR FURTHER INFORMATION CONTACT** section to schedule your inspection. The Regional Office's official hours of business are Monday through Friday, 8:30 to 4:30, excluding legal holidays.

**FOR FURTHER INFORMATION CONTACT:** Ida E. McDonnell, Air Permits, Toxics and Indoor Air Unit, U.S. Environmental Protection Agency, EPA New England Regional Office, One Congress Street, Suite 1100 (CAP), Boston, MA 02114–2023, telephone number (617) 918–1653, fax number (617) 918–0653, e-mail *mcdonnell.ida@epa.gov.*

**SUPPLEMENTARY INFORMATION:** Throughout this document whenever ''we,'' ''us,'' or ''our'' is used, we mean EPA.

Organization of this document: The following outline is provided to aid in locating information in this preamble.

I. Background
II. Public Comment
III. EPA Action
IV. Statutory and Executive Order Reviews

### I. Background

Section 328(a) of the Clean Air Act (the Act) requires that EPA establish requirements to control air pollution from OCS sources located within 25 miles of states' seaward boundaries that are the same as onshore requirements. To comply with this statutory mandate, EPA must incorporate applicable rules of the corresponding onshore area (COA) into 40 CFR part 55.

On February 27, 2008 (73 FR 10406), EPA proposed to incorporate various Massachusetts air pollution control requirements into 40 CFR part 55. These requirements are being promulgated in response to the submittal of a Notice of Intent (NOI) on December 7, 2007 by Cape Wind Associates, LLC of Boston, Massachusetts. EPA has evaluated the proposed requirements to ensure that they are rationally related to the attainment or maintenance of federal or state ambient air quality standards or Part C of title I of the Act, that they are not designed expressly to prevent exploration and development of the OCS and that they are applicable to OCS sources. 40 CFR 55.1. EPA has also evaluated the rules to ensure that they are not arbitrary or capricious. 40 CFR 55.12(e). In addition, EPA has excluded administrative or procedural rules.

Section 328(a) of the Act and 40 CFR part 55 limit EPA's flexibility in deciding which requirements will be incorporated into part 55 and prevent

EPA from making substantive changes to the requirements it incorporates. As a result, EPA may be incorporating rules into part 55 that do not conform to all of EPA's state implementation plan (SIP) guidance or certain requirements of the Act. Consistency updates may result in the inclusion of state or local rules or regulations into part 55, even though the same rules may ultimately be disapproved for inclusion as part of the SIP. Inclusion in the OCS rule does not imply that a rule meets the requirements of the Act for SIP approval, nor does it imply that the rule will be approved by EPA for inclusion in the SIP.

**II. Public Comment**

EPA received comments on the proposed consistency update from Cape Wind Associates. Summaries of those comments and EPA's responses are as follows.

*Comment:* Cape Wind Associates (CWA) recognizes EPA's approach to the consistency review is to include all state requirements that could potentially apply to any OCS source. CWA wants EPA to confirm that the ultimate applicability of any specific rule to Cape Wind is to be determined on a case-by-case basis, consistent with the unique attributes of each OCS source, COA and the mandate to attain and maintain ambient air quality.

*Response:* Section 328 of the Act requires that for sources located within 25 miles of a state's seaward boundary, the requirements shall be the same as would be applicable if the sources were located in the corresponding onshore area. EPA's action specifies the OCS requirements that will apply to any OCS source for which Massachusetts is the COA. The intended effect of approving the OCS requirements is to regulate emissions from OCS sources in accordance with the requirements onshore, to the extent those requirements are applicable to OCS sources and as modified by the requirements of section 328 and 40 CFR part 55. In updating 40 CFR part 55, EPA reviewed the Commonwealth's rules to ensure that they are rationally related to the attainment or maintenance of federal or state ambient air quality standards or part C of title I of the Act, that they are not designed expressly to prevent exploration and development of the OCS and that they are applicable to OCS sources. By contrast, when permitting a source, EPA determines which requirements apply to that source. Therefore, upon receipt of a permit application for any proposed OCS source (including Cape Wind), EPA will determine which of the regulations included in part 55 apply to that OCS source.

*Comment:* CWA would like EPA in the consistency update to devote substantial attention to the nature and environmental policy implications of the type of construction-stage sources presented in the NOI, and the subsequent and resulting benefits of an operating renewable energy project to air quality attainment and maintenance.

*Response:* As stated above, the purpose of the consistency update is to establish OCS requirements that regulate emissions from OCS sources in accordance with the requirements onshore. Although the proposed consistency update was triggered by Cape Wind's Notice of Intent, a part 55 consistency update applies not just to the OCS source identified in the Notice of Intent, but rather any source located in the OCS for which the identified onshore area (in this case, Massachusetts) is the COA. Consequently, EPA does not consider the characteristics of particular proposed OCS sources in determining which state requirements are applicable on the OCS.

*Comment:* CWA suggests in its comments that the consistency update may conflict with regulations currently being developed by the Minerals Management Service (''MMS'') pursuant to the Energy Policy Act of 2005 (Pub. L. 109–58, codified in relevant part at 43 U.S.C. 1337(p)). CWA expresses general concern with the prospect of inconsistent regulatory actions and comments that the consistency update should be treated as a ''significant regulatory action'' under Executive Order 12866 (58 FR 51735) and a ''significant energy action'' under Executive Order 13211 (66 FR 28355).

*Response:* EPA has considered the potential for the consistency update to conflict with the actions of MMS and determined that the consistency update does not meet the definition of significant regulatory action under section 3 of Executive Order 12866 because it is not likely to ''[c]reate a serious inconsistency or otherwise interfere with an action taken or planned by another agency.''

The consistency update simply updates the existing requirements for controlling air pollution from OCS sources to make them consistent with rules in the corresponding onshore areas as specifically required by section 328 of the Act. This action is not discretionary on the part of EPA. The authority of MMS to regulate leases, easements, or rights-of-way on the outer continental shelf that ''produce or support [the] production, transportation, or transmission of energy from sources other than oil or natural gas'' under the Energy Policy Act of 2005 does not present a conflict. *See* 43 U.S.C. 1337(p)(1)(C). The Energy Policy Act explicitly states that ''[n]othing in this subsection displaces, supersedes, limits, or modifies the jurisdiction, responsibility, or authority of any Federal or State agency under any other Federal law.'' 43 U.S.C. 1337(p)(9). As EPA is required by the Clean Air Act to issue the consistency update, the consistency update is enacted under an authority not displaced by the authority granted to the MMS and no actual conflict will occur.

Since EPA proposed its consistency update, MMS has issued its proposed regulations. See Alternative Energy and Alternate Uses of Existing Facilities on the Outer Continental Shelf, 73 FR 39376 (July 9, 2008). EPA has found no possible conflict between this action and MMS's proposed regulations. Indeed, MMS's proposed rule specifically states that proposed OCS sources (other than those in the western Gulf of Mexico, for which MMS itself establishes the air pollution requirements) must comply with the Act and 40 CFR part 55. *See* 73 FR at 39384, 39429, 39431, 39498. Consequently, there is no conflict. Because the consistency update will not conflict with actions taken by MMS pursuant to the Energy Policy Act of 2005, the consistency update is not an ''inconsistent, incompatible, or duplicative'' regulation and is not rendered a significant regulatory action under Executive Order 12866.

Executive Order 13211 outlines additional procedures to be followed when a regulation is both a significant regulatory action under Executive Order 12866 and is either ''likely to have a significant adverse effect on the supply, distribution, or use of energy,'' or is designated by the Administrator of the Office of Information and Regulatory Affairs. Since the consistency update is not a significant regulatory action under Executive Order 12866, it is not a significant energy action under Executive Order 13211.

Finally, even if the consistency update were a significant regulatory action under Executive Order 12866, EPA has no reason to believe that updating the existing requirements for controlling air pollution from outer continental shelf sources to make them consistent with rules already applied to sources in the corresponding onshore areas would be ''likely to have a significant adverse effect on the supply, distribution, or use of energy'' within the meaning of section 4(b)(1)(ii) of

Executive Order 13211. Therefore, even if the consistency update were a significant regulatory action under Executive Order 12866, it would not be a significant energy action under Executive Order 13211.

## III. EPA Action

In this document, EPA takes final action to incorporate the proposed changes into 40 CFR part 55. No changes were made to the proposed action. EPA is approving the proposed action under section 328(a)(1) of the Act, 42 U.S.C. 7627. Section 328(a) of the Act requires that EPA establish requirements to control air pollution from OCS sources located within 25 miles of states' seaward boundaries that are the same as onshore requirements. To comply with this statutory mandate, EPA must incorporate applicable onshore rules into part 55 as they exist onshore.

## IV. Statutory and Executive Order Reviews

Under the Clean Air Act, the Administrator is required to establish requirements to control air pollution from OCS sources located within 25 miles of States' seaward boundaries that are the same as onshore air control requirements. To comply with this statutory mandate, EPA must incorporate applicable onshore rules into part 55 as they exist onshore. 42 U.S.C. 7627(a)(1); 40 CFR 55.12. Thus, in promulgating OCS consistency updates, EPA's role is to maintain consistency between OCS regulations and the regulations of onshore areas, provided that they meet the criteria of the Clean Air Act. Accordingly, this action simply updates the existing OCS requirements to make them consistent with requirements onshore, without the exercise of any policy discretion by EPA. For that reason, this action:

- Is not a ''significant regulatory action'' subject to review by the Office of Management and Budget under Executive Order 12866 (58 FR 51735, October 4, 1993);
- Is certified as not having a significant economic impact on a substantial number of small entities under the Regulatory Flexibility Act (5 U.S.C. 601 *et seq.*);
- Does not contain any unfunded mandate or significantly or uniquely affect small governments, as described in the Unfunded Mandates Reform Act of 1995 (Pub. L. 104–4);
- Does not have Federalism implications as specified in Executive Order 13132 (64 FR 43255, August 10, 1999);
- Is not an economically significant regulatory action based on health or safety risks subject to Executive Order 13045 (62 FR 19885, April 23, 1997);
- Is not a significant regulatory action subject to Executive Order 13211 (66 FR 28355, May 22, 2001);
- Is not subject to requirements of Section 12(d) of the National Technology Transfer and Advancement Act of 1995 (15 U.S.C. 272 note) because application of those requirements would be inconsistent with the Clean Air Act; and
- Does not provide EPA with the discretionary authority to address, as appropriate, disproportionate human health or environmental effects, using practicable and legally permissible methods, under Executive Order 12898 (59 FR 7629, February 16, 1994).

In addition, this rule does not have tribal implications as specified by Executive Order 13175 (65 FR 67249, November 9, 2000), because it does not have a substantial direct effect on one or more Indian tribes, on the relationship between the Federal Government and Indian tribes, or on the distribution of power and responsibilities between the Federal Government and Indian tribes, nor does it impose substantial direct compliance costs on tribal governments, nor preempt tribal law.

Under the provisions of the Paperwork Reduction Act, 44 U.S.C. 3501 *et seq.*, OMB has approved the information collection requirements contained in 40 CFR part 55 and, by extension, this update to the rules, and has assigned OMB control number 2060–0249. Notice of OMB's approval of EPA Information Collection Request (''ICR'') No. 1601.06 was published in the **Federal Register** on March 1, 2006 (71 FR 10499–10500). The approval expires January 31, 2009. As EPA previously indicated (70 FR 65897–65898 (November 1, 2005)), the annual public reporting and recordkeeping burden for collection of information under 40 CFR part 55 is estimated to average 549 hours per response. Burden means the total time, effort, or financial resources expended by persons to generate, maintain, retain, or disclose or provide information to or for a Federal agency. This includes the time needed to review instructions; develop, acquire, install, and utilize technology and systems for the purposes of collecting, validating, and verifying information, processing and maintaining information, and disclosing and providing information; adjust the existing ways to comply with any previously applicable instructions and requirements; train personnel to be able to respond to a collection of information; search data sources; complete and review the collection of information; and transmit or otherwise disclose the information.

An agency may not conduct or sponsor, and a person is not required to respond to, a collection of information unless it displays a currently valid OMB control number. The OMB control numbers for EPA's regulations in 40 CFR are listed in 40 CFR part 9 and are identified on the form and/or instrument, if applicable. In addition, the table in 40 CFR part 9 of currently approved OMB control numbers for various regulations lists the regulatory citations for the information requirements contained in 40 CFR part 55.

The Congressional Review Act, 5 U.S.C. 801 *et seq.*, as added by the Small Business Regulatory Enforcement Fairness Act of 1996, generally provides that before a rule may take effect, the agency promulgating the rule must submit a rule report, which includes a copy of the rule, to each House of the Congress and to the Comptroller General of the United States. EPA will submit a report containing this action and other required information to the U.S. Senate, the U.S. House of Representatives, and the Comptroller General of the United States prior to publication of the rule in the **Federal Register**. A major rule cannot take effect until 60 days after it is published in the **Federal Register**. This action is not a ''major rule'' as defined by 5 U.S.C. 804(2).

Under section 307(b)(1) of the Clean Air Act, petitions for judicial review of this action must be filed in the United States Court of Appeals for the appropriate circuit by November 17, 2008. Filing a petition for reconsideration by the Administrator of this final rule does not affect the finality of this action for the purposes of judicial review nor does it extend the time within which a petition for judicial review may be filed, and shall not postpone the effectiveness of such rule or action. This action may not be challenged later in proceedings to enforce its requirements. (See section 307(b)(2).)

## List of Subjects in 40 CFR Part 55

Environmental protection, Administrative practice and procedure, Air pollution control, Continental Shelf, Incorporation by reference, Intergovernmental relations, Nitrogen dioxide, Ozone, Particulate matter, Reporting and recordkeeping requirements, Sulfur oxides.

Dated: August 18, 2008.

**Ira W. Leighton,**

*Acting Regional Administrator, EPA New England.*

■ For the reasons stated in the preamble, title 40, chapter I of the Code of Federal Regulations, is amended as follows:

## PART 55—[AMENDED]

■ 1. The authority citation for part 55 continues to read as follows:

**Authority:** Section 328 of the Act (42 U.S.C. 7401, *et seq.*) as amended by Public Law 101–549.

■ 2. Section 55.14 is amended as follows:

■ a. By adding paragraph (d)(11).

■ b. In paragraph (e) introductory text by adding a new address after the words ''regional offices:''.

■ c. By adding paragraph (e)(11).

**§ 55.14 Requirements that apply to OCS sources located within 25 miles of States' seaward boundaries, by State.**

* * * * *

(d) * * *

(11) Massachusetts.

(i) 40 CFR part 52, subpart W.

(ii) [Reserved]

* * * * *

(e) * * * U.S.EPA, Region 1 (Massachusetts) One Congress Street, Boston, MA 02114–2023 * * *

* * * * *

(11) Massachusetts.

(i) State requirements.

(A) Commonwealth of Massachusetts Requirements Applicable to OCS Sources, December 28, 2007.

(B) [Reserved]

(ii) Local requirements.

(A) [Reserved]

* * * * *

■ 3. Appendix A to CFR part 55 is amended by adding an entry for Massachusetts in alphabetical order to read as follows:

### Appendix A to Part 55—Listing of State and Local Requirements Incorporated by Reference Into Part 55, by State

* * * * *

Massachusetts

(a) State requirements.

(1) The following Commonwealth of Massachusetts requirements are applicable to OCS Sources, December 28, 2007, Commonwealth of Massachusetts—Department of Environmental Protection. The following sections of 310 CMR 4.00, 310 CMR 6.00, 310 CMR 7.00 and 310 CMR 8.00:

**310 CMR 4.00: Timely Action Schedule and Fee Provisions**

Section 4.01: Purpose, Authority and General Provisions (Effective 10/19/2007)
Section 4.02: Definitions (Effective 10/19/2007)
Section 4.03: Annual Compliance Assurance Fee (Effective 10/19/2007)

**310 CMR 6.00: Ambient Air Quality Standards for the Commonwealth of Massachusetts**

Section 6.01: Definitions (Effective 12/28/2007)
Section 6.02: Scope (Effective 12/28/2007)
Section 6.03: Reference Conditions (Effective 12/28/2007)
Section 6.04: Standards (Effective 12/28/2007)

**310 CMR 7.00: Air Pollution Control**

Section 7.00: Statutory Authority; Legend; Preamble; Definitions (Effective 12/28/2007)
Section 7.01: General Regulations to Prevent Air Pollution (Effective 12/28/2007)
Section 7.02: U Plan Approval and Emission Limitations (Effective 12/28/2007)
Section 7.03: U Plan Approval Exemptions: Construction Requirements (Effective 12/28/2007)
Section 7.04: U Fossil Fuel Utilization Facilities (Effective 12/28/2007)
Section 7.05: U Fuels All Districts (Effective 12/28/2007)
Section 7.06: U Visible Emissions (Effective 12/28/2007)
Section 7.07: U Open Burning (Effective 12/28/2007)
Section 7.08: U Incinerators (Effective 12/28/2007)
Section 7.09: U Dust, Odor, Construction and Demolition (Effective 12/28/2007)
Section 7.11: U Transportation Media (Effective 12/28/2007)
Section 7.12: U Source Registration (Effective 12/28/2007)
Section 7.13: U Stack Testing (Effective 12/28/2007)
Section 7.14: U Monitoring Devices and Reports (Effective 12/28/2007)
Section 7.15: U Asbestos (Effective 12/28/2007)
Section 7.18: U Volatile and Halogenated Organic Compounds (Effective 12/28/2007)
Section 7.19: U Reasonably Available Control Technology (RACT) for Sources of Oxides of Nitrogen ($NO_X$) (Effective 12/28/2007)
Section 7.21: Sulfur Dioxide Emissions Limitations (Effective 12/28/2007)
Section 7.22: Sulfur Dioxide Emissions Reductions for the Purpose of Reducing Acid Rain (Effective 12/28/2007)
Section 7.24: U Organic Material Storage and Distribution (Effective 12/28/2007)
Section 7.25: U Best Available Controls for Consumer and Commercial Products (Effective 12/28/2007)
Section 7.26: Industry Performance Standards (Effective 12/28/2007)
Section 7.27: $NO_X$ Allowance Program (Effective 12/28/2007)
Section 7.28: $NO_X$ Allowance Trading Program (Effective 12/28/2007)
Section 7.29: Emissions Standards for Power Plants (Effective 12/28/2007)
Section 7.60: U Severability (Effective 12/28/2007)
Section 7.00: Appendix A (Effective 12/28/2007)
Section 7.00: Appendix B (Effective 12/28/2007)
Section 7.00: Appendix C (Effective 12/28/2007)

**310 CMR 8.00: The Prevention and/or Abatement of Air Pollution Episode and Air Pollution Incident Emergencies**

Section 8.01: Introduction (Effective 12/28/2007)
Section 8.02: Definitions (Effective 12/28/2007)
Section 8.03: Air Pollution Episode Criteria (Effective 12/28/2007)
Section 8.04: Air Pollution Episode Potential Advisories (Effective 12/28/2007)
Section 8.05: Declaration of Air Pollution Episodes and Incidents (Effective 12/28/2007)
Section 8.06: Termination of Air Pollution Episodes and Incident Emergencies (Effective 12/28/2007)
Section 8.07: Emission Reductions Strategies (Effective 12/28/2007)
Section 8.08: Emission Reduction Plans (Effective 12/28/2007)
Section 8.15: Air Pollution Incident Emergency (Effective 12/28/2007)
Section 8.30: Severability (Effective 12/28/2007)

(2) [Reserved]

* * * * *

[FR Doc. E8–21486 Filed 9–16–08; 8:45 am]

BILLING CODE 6560–50–P

## ENVIRONMENTAL PROTECTION AGENCY

## 40 CFR Part 180

**[EPA–HQ–OPP–2006–0791; FRL–8374–1]**

## Inert Ingredient: Exemption From the Requirement of a Tolerance for amylopectin, acid-hydrolyzed, 1-octenylbutanedioate and for amylopectin, hydrogen 1-octadecenylbutanedioate

**AGENCY:** Environmental Protection Agency (EPA).

**ACTION:** Final rule.

**SUMMARY:** This regulation establishes exemptions from the requirement of a tolerance for residues of amylopectin, acid-hydrolyzed, 1-octenylbutanedioate (CAS Reg. No. 113894–85–2) and for amylopectin, hydrogen 1-octadecenylbutanedioate (CAS Reg. No. 125109–81–1) when used in antimicrobial formulations (food-contact surface sanitizing solutions) under 40 CFR 180.940(a), and when used in accordance with good agricultural or manufacturing practice under 40 CFR 180.950. The petitioner, Lewis & Harrison, LLC, on behalf of Alco Chemical, submitted a petition to EPA under the Federal Food, Drug, and Cosmetic Act (FFDCA), as amended by the Food Quality Protection Act of 1996 (FQPA), requesting an exemption from the requirement of a tolerance. This

regulation eliminates the need to establish a maximum permissible level for residues of amylopectin, acid-hydrolyzed, 1-octenylbutanedioate and amylopectin, hydrogen 1-octadecenylbutanedioate.

**DATES:** This regulation is effective September 17, 2008. Objections and requests for hearings must be received on or before November 17, 2008, and must be filed in accordance with the instructions provided in 40 CFR part 178 (see also Unit I.C. of the **SUPPLEMENTARY INFORMATION**).

**ADDRESSES:** EPA has established a docket for this action under docket identification (ID) number EPA–HQ–OPP–2006–0791. To access the electronic docket, go to *http://www.regulations.gov*, select ''Advanced Search,'' then ''Docket Search.'' Insert the docket ID number where indicated and select the ''Submit'' button. Follow the instructions on the regulations.gov website to view the docket index or access available documents. All documents in the docket are listed in the docket index available in regulations.gov. Although listed in the index, some information is not publicly available, e.g., Confidential Business Information (CBI) or other information whose disclosure is restricted by statute. Certain other material, such as copyrighted material, is not placed on the Internet and will be publicly available only in hard copy form. Publicly available docket materials are available either in the electronic docket at *http://www.regulations.gov*, or, if only available in hard copy, at the OPP Regulatory Public Docket in Rm. S–4400, One Potomac Yard (South Bldg.), 2777 S. Crystal Dr., Arlington, VA. The Docket Facility is open from 8:30 a.m. to 4 p.m., Monday through Friday, excluding legal holidays. The Docket Facility telephone number is (703) 305–5805.

**FOR FURTHER INFORMATION CONTACT:** Karen Samek, Registration Division (7505P), Office of Pesticide Programs, Environmental Protection Agency, 1200 Pennsylvania Ave., NW., Washington, DC 20460–0001; telephone number: (703) 347–8825; e-mail address: *samek.karen@epa.gov*.

**SUPPLEMENTARY INFORMATION:**

## I. General Information

### *A. Does this Action Apply to Me?*

You may be potentially affected by this action if you are an agricultural producer, food manufacturer, or pesticide manufacturer. Potentially affected entities may include, but are not limited to:

- Crop production (NAICS code 111).
- Animal production (NAICS code 112).
- Food manufacturing (NAICS code 311).
- Pesticide manufacturing (NAICS code 32532).

This listing is not intended to be exhaustive, but rather provides a guide for readers regarding entities likely to be affected by this action. Other types of entities not listed in this unit could also be affected. The North American Industrial Classification System (NAICS) codes have been provided to assist you and others in determining whether this action might apply to certain entities. If you have any questions regarding the applicability of this action to a particular entity, consult the person listed under **FOR FURTHER INFORMATION CONTACT**.

### *B. How Can I Access Electronic Copies of this Document?*

In addition to accessing an electronic copy of this **Federal Register** document through the electronic docket at *http://www.regulations.gov*, you may access this **Federal Register** document electronically through the EPA Internet under the ''**Federal Register**'' listings at *http://www.epa.gov/fedrgstr*. You may also access a frequently updated electronic version of 40 CFR part 180 through the Government Printing Office's pilot e-CFR site at *http://www.gpoaccess.gov/ecfr*.

### *C. Can I File an Objection or Hearing Request?*

Under section 408(g) of FFDCA, as amended by FQPA, any person may file an objection to any aspect of this regulation and may also request a hearing on those objections. The EPA procedural regulations which govern the submission of objections and requests for hearings appear in 40 CFR part 178. You must file your objection or request a hearing on this regulation in accordance with the instructions provided in 40 CFR part 178. To ensure proper receipt by EPA, you must identify docket ID number EPA–HQ–OPP–2006–0791 in the subject line on the first page of your submission. All requests must be in writing, and must be mailed or delivered to the Hearing Clerk on or before November 17, 2008.

In addition to filing an objection or hearing request with the Hearing Clerk as described in 40 CFR part 178, please submit a copy of the filing that does not contain any CBI for inclusion in the public docket that is described in **ADDRESSES**. Information not marked confidential pursuant to 40 CFR part 2 may be disclosed publicly by EPA without prior notice. Submit your copies, identified by docket ID number EPA–HQ–OPP–2006–0791, by one of the following methods:

- *Federal eRulemaking Portal*: *http://www.regulations.gov*. Follow the on-line instructions for submitting comments.
- *Mail*: Office of Pesticide Programs (OPP) Regulatory Public Docket (7502P), Environmental Protection Agency, 1200 Pennsylvania Ave., NW. Washington, DC 20460–0001.
- *Delivery*: OPP Regulatory Public Docket (7502P), Environmental Protection Agency, Rm. S–4400, One Potomac Yard (South Bldg.), 2777 S. Crystal Dr., Arlington, VA. Deliveries are only accepted during the Docket's normal hours of operation (8:30 a.m. to 4 p.m., Monday through Friday, excluding legal holidays). Special arrangements should be made for deliveries of boxed information. The Docket Facility telephone number is (703) 305–5805.

## II. Background and Statutory Findings

In the **Federal Register** of December 20, 2006 (71 FR 76321) (FRL–8104–4), EPA issued a notice pursuant to section 408 of FFDCA, 21 U.S.C. 346a, as amended by FQPA (Public Law 104–170), announcing the filing of a pesticide petition (PP 6E7083) by Lewis & Harrison, LLC, on behalf of Alco Chemical, 122 C St., NW., Suite 740, Washington, DC 20001. The petition requested that 40 CFR 180.940(a) and 40 CFR 180.950 be amended by establishing exemptions from the requirement of a tolerance for residues of amylopectin, acid-hydrolyzed, 1-octenylbutanedioate (CAS Reg. No. 113894–85–2) and amylopectin, hydrogen 1-octadecenylbutanedioate (CAS Reg. No. 125109–81–1) when used in antimicrobial formulations (food-contact surface sanitizing solutions) under 40 CFR 180.940(a) and when used in accordance with good agricultural or manufacturing practice under 40 CFR 180.950. That notice included a summary of the petition prepared by the petitioner. There were no comments received in response to the notice of filing. For ease of reading in this document amylopectin, acid-hydrolyzed, 1-octenylbutanedioate (CAS Reg. No. 113894–85–2) and amylopectin, hydrogen 1-octadecenylbutanedioate (CAS Reg. No. 125109–81–1) are referred to as starch octenylsuccinates.

Section 408(b)(2)(A)(i) of FFDCA allows EPA to establish an exemption from the requirement for a tolerance (the legal limit for a pesticide chemical residue in or on a food) only if EPA determines that the tolerance is ''safe.''

Section 408(b)(2)(A)(ii) of FFDCA defines ''safe'' to mean that ''there is a reasonable certainty that no harm will result from aggregate exposure to the pesticide chemical residue, including all anticipated dietary exposures and all other exposures for which there is reliable information.'' This includes exposure through drinking water and in residential settings, but does not include occupational exposure. Section 408(b)(2)(C) of FFDCA requires EPA to give special consideration to exposure of infants and children to the pesticide chemical residue in establishing a tolerance and to ''ensure that there is a reasonable certainty that no harm will result to infants and children from aggregate exposure to the pesticide chemical residue. . . .''

EPA performs a number of analyses to determine the risks from aggregate exposure to pesticide residues. First, EPA determines the toxicity of pesticides. Second, EPA examines exposure to the pesticide through food, drinking water, and through other exposures that occur as a result of pesticide use in residential settings.

## III. Toxicological Profile

Consistent with section 408(b)(2)(D) of FFDCA, EPA has reviewed the available scientific data and other relevant information in support of this action and considered its validity, completeness and reliability and the relationship of this information to human risk. EPA has also considered available information concerning the variability of the sensitivities of major identifiable subgroups of consumers, including infants and children. The nature of the toxic effects caused by starch octenylsuccinates are discussed in this unit.

The following provides a brief summary of the risk assessment and conclusions for the Agency's review of starch octenylsuccinates. The Agency's full decision document for this action is available in EPA's Electronic Docket at *http://www.regulations.gov*, under docket number EPA–HQ–OPP–2006–0791.

The toxicity database is sufficient for starch octenylsuccinates. In terms of hazard, there are low concerns (practically non-toxic). In subchronic and chronic toxicity feeding studies in rats, the results show that the compound does not produce compound-related effects at dietary concentrations as high as 30% of the diet (equivalent to 15 gram/kilogram/day (g/kg/day)). While no neurotoxicity studies where submitted, neurotoxicity was not observed in the dietary studies at concentrations as high as 30% (15 g/day) of the test material. The compound does not suggest increased toxicity in young rats and all the mutagenicity testing results were negative. The metabolism data showed that with oral dosing in dogs, $^{14}$C-octenylsuccinate was absorbed and eliminated via the urine and feces. The major route of elimination was via urine (62–72% of the administered radioactivity). No developmental toxicity studies are available in the data base. However, in the dietary study conducted in rats fed octenylsuccinate modified starch during gestation through post-natal day 90 at doses up to 30% (15 g/day), there was no systemic toxicity in female rats and their offspring.

Furthermore, it should be noted that starch octenylsuccinate anhydride is currently permitted by the U.S. Food and Drug Administration (FDA) as a direct food additive under 21 CFR 172.892.

## IV. Aggregate Exposures

In examining aggregate exposure, section 408 of FFDCA directs EPA to consider available information concerning exposures from the pesticide residue in food and all other non-occupational exposures, including drinking water from ground water or surface water and exposure through pesticide use in gardens, lawns, or buildings (residential and other indoor uses).

For dietary exposures, application of starch octenylsuccinates to food (including crops, meats, and fish) as inert ingredients in pesticide products is not expected to result in significant human exposure to starch octenylsuccinates residues considering their rapid biodegradation in soil and water and lack of persistence in the environment. For the same reason, significant drinking water exposures from the use of these chemicals as inert ingredients in pesticide formulations are not anticipated.

In evaluating the potential for exposure from the use of starch octenylsuccinates in residential pesticide products, inhalation exposures are not anticipated since the compounds are not likely to volatize and are not expected to be absorbed via inhalation due to their large particle size. It is expected that dermal exposure is the primary route of exposure; however, based on their molecular weight, these chemicals are not likely to be absorbed via the dermal route. Therefore, there is no concern for dermal exposure.

Starch octenylsuccinates are widely used in a variety of consumer products. An aggregate assessment for starch octenylsuccinates was not conducted because the exposures to the chemicals by non-pesticide consumer products are not likely to result in significant residues of concern. Furthermore, starch octenylsuccinates are used as food additives and are normal constituents of the human diet.

## V. Cumulative Effects

Section 408(b)(2)(D)(v) of FFDCA requires that, when considering whether to establish, modify, or revoke a tolerance, the Agency consider ''available information'' concerning the cumulative effects of a particular pesticide's residues and ''other substances that have a common mechanism of toxicity.'' Unlike other pesticides for which EPA has followed a cumulative risk approach based on a common mechanism of toxicity, EPA has not made a common mechanism of toxicity finding as to starch octenylsuccinates and any other substances and, these materials do not appear to produce a toxic metabolite produced by other substances. For the purposes of this tolerance action, therefore, EPA has not assumed that starch octenylsuccinates have a common mechanism of toxicity with other substances. For information regarding EPA's efforts to determine which chemicals have a common mechanism of toxicity and to evaluate the cumulative effects of such chemicals, see the policy statements released by EPA's Office of Pesticide Programs concerning common mechanism determinations and procedures for cumulating effects from substances found to have a common mechanism on EPA's website at *http://www.epa.gov/pesticides/cumulative/*.

## VI. Safety Factor for Infants and Children

Section 408 of the FFDCA provides that EPA shall apply an additional tenfold margin of safety for infants and children in the case of threshold effects to account for prenatal and postnatal toxicity and the completeness of the database on toxicity and exposure unless EPA determines that a different margin of safety will be safe for infants and children. Margins of safety are incorporated into EPA risk assessments either directly through use of a MOE analysis or through using uncertainty (safety) factors in calculating a dose level that poses no appreciable risk to humans. The toxicity database is sufficient for starch octenylsuccinates and potential exposure is adequately characterized given the low toxicity of starch octenylsuccinates. In terms of hazard, there are low concerns (practically non-toxic) and no residual

uncertainties regarding prenatal and/or postnatal toxicity. No developmental toxicity studies are available in the data base. However, in the dietary study conducted in rats fed octenylsuccinate modified starch during gestation through post-natal day 90 at doses up to 30% (15 g/day), there was no systemic toxicity in female rats and their offspring. Based on lack of any systemic toxicity at doses up to 15 g/day in rats, lack of any apparent developmental effects, and lack of any systemic toxicity in weanlings at doses up to 15 g/day, EPA concluded that there is no evidence of increased susceptibility to infants and children. Given the low toxicity of starch octenylsuccinates, a safety factor analysis has not been used to assess risk. For similar reasons, including the lack of any concern regarding increased sensitivity in the young, the additional 10X FQPA safety factor for protection of infants and children is not necessary.

## VII. Determination of Safety

The toxicity database is sufficient for the risk assessment of starch octenylsuccinates as specified. In terms of hazard, there are low concerns (practically non-toxic). The toxicity database does not indicate susceptibility in fetuses, thus there is no concern at this time for increased sensitivity to infants and children to starch octenylsuccinates when used as ingredients in pesticide formulations.

Dietary (food and drinking water) exposures of concern are not anticipated from the use of starch octenylsuccinate as inert ingredients in pesticide and non-pesticide products, considering their rapid biodegradation in soil and water and lack of persistence in the environment. Inhalation and dermal exposures of concern from the use of these chemicals as inert ingredients in pesticide products in residential settings are not anticipated because these compounds are not likely to volatize and are not expected to be absorbed due to their large particle size.

Considering their low toxicity (practically non-toxic), ready biodegradation in soil and water, and lack of persistence in the environment, it is unlikely that dietary and residential exposures of concern would result from the use of starch octenylsuccinates as ingredients in pesticides. An aggregate assessment for starch octenylsuccinates was not conducted because the exposures to the chemicals by non-pesticide consumer products are not likely to result in significant residues of concern.

Based on this information, EPA concludes that starch octenylsuccinates do not pose a risk to the general population, or to infants and children, under reasonably foreseeable circumstances. Therefore, EPA finds that the exemptions from the requirement of a tolerance for amylopectin, acid-hydrolyzed, 1-octenylbutanedioate (CAS Reg. No. 113894–85–2) and for amylopectin, hydrogen 1-octadecenylbutanedioate (CAS Reg. No. 125109–81–1) when used in antimicrobial formulations (food-contact surface sanitizing solutions) under 40 CFR 180.940(a), and when used in accordance with good agricultural or manufacturing practice under 40 CFR 180.950 will be safe under section 408(c) of FFDCA and is granting the requested tolerance exemptions.

## VIII. Other Considerations

### *A. Analytical Method*

An analytical method is not required for enforcement purposes since the Agency is establishing an exemption from the requirement of a tolerance without any numerical limitation.

### *B. International Tolerances*

The Agency is not aware of any country requiring a tolerance for amylopectin, acid-hydrolyzed, 1-octenylbutanedioate (CAS Reg. No. 113894–85–2) and for amylopectin, hydrogen 1-octadecenylbutanedioate (CAS Reg. No. 125109–81–1) nor have any CODEX Maximum Residue Levels (MRLs) been established for any food crops at this time.

## IX. Statutory and Executive Order Reviews

This final rule establishes a tolerance under section 408(d) of FFDCA in response to a petition submitted to the Agency. The Office of Management and Budget (OMB) has exempted these types of actions from review under Executive Order 12866, entitled *Regulatory Planning and Review* (58 FR 51735, October 4, 1993). Because this final rule has been exempted from review under Executive Order 12866, this final rule is not subject to Executive Order 13211, *Actions Concerning Regulations That Significantly Affect Energy Supply, Distribution, or Use* (66 FR 28355, May 22, 2001) or Executive Order 13045, entitled *Protection of Children from Environmental Health Risks and Safety Risks* (62 FR 19885, April 23, 1997). This final rule does not contain any information collections subject to OMB approval under the Paperwork Reduction Act (PRA), 44 U.S.C. 3501 *et seq.*, nor does it require any special considerations under Executive Order 12898, entitled *Federal Actions to Address Environmental Justice in Minority Populations and Low-Income Populations* (59 FR 7629, February 16, 1994).

Since tolerances and exemptions that are established on the basis of a petition under section 408(d) of FFDCA, such as the tolerance in this final rule, do not require the issuance of a proposed rule, the requirements of the Regulatory Flexibility Act (RFA) (5 U.S.C. 601 *et seq.*) do not apply.

This final rule directly regulates growers, food processors, food handlers, and food retailers, not States or tribes, nor does this action alter the relationships or distribution of power and responsibilities established by Congress in the preemption provisions of section 408(n)(4) of FFDCA. As such, the Agency has determined that this action will not have a substantial direct effect on States or tribal governments, on the relationship between the national government and the States or tribal governments, or on the distribution of power and responsibilities among the various levels of government or between the Federal Government and Indian tribes. Thus, the Agency has determined that Executive Order 13132, entitled *Federalism* (64 FR 43255, August 10, 1999) and Executive Order 13175, entitled *Consultation and Coordination with Indian Tribal Governments* (65 FR 67249, November 9, 2000) do not apply to this final rule. In addition, this final rule does not impose any enforceable duty or contain any unfunded mandate as described under Title II of the Unfunded Mandates Reform Act of 1995 (UMRA) (Public Law 104–4).

This action does not involve any technical standards that would require Agency consideration of voluntary consensus standards pursuant to section 12(d) of the National Technology Transfer and Advancement Act of 1995 (NTTAA), Public Law 104–113, section 12(d) (15 U.S.C. 272 note).

## X. Congressional Review Act

The Congressional Review Act, 5 U.S.C. 801 *et seq.*, generally provides that before a rule may take effect, the agency promulgating the rule must submit a rule report to each House of the Congress and to the Comptroller General of the United States. EPA will submit a report containing this rule and other required information to the U.S. Senate, the U.S. House of Representatives, and the Comptroller General of the United States prior to publication of this final rule in the **Federal Register**. This final rule is not a ''major rule'' as defined by 5 U.S.C. 804(2).

**List of Subjects in 40 CFR Part 180**

Environmental protection, Administrative practice and procedure, Agricultural commodities, Pesticides and pests, Reporting and recordkeeping requirements.

Dated: September 4, 2008.

**Lois Rossi,**

*Director, Registration Division, Office of Pesticide Programs.*

■ Therefore, 40 CFR chapter I is amended as follows:

## PART 180—[AMENDED]

■ 1. The authority citation for part 180 continues to read as follows:

**Authority:** 21 U.S.C. 321(q), 346a and 371.

■ 2. Section 180.940 is amended by alphabetically adding entries to the table in paragraph (a) to read as follows:

**§ 180.940 Tolerance exemptions for active and inert ingredients for use in antimicrobial formulations (Food-contact surface sanitizing solutions).**

(a) * * *

| Pesticide Chemical | CAS Reg. No. | Limits |
|---|---|---|
| * * * * * | * * | |
| Amylopectin, acid-hydrolyzed, 1-oxtenylbutanedioate | 113894–85–2 | none |
| Amylopectin, hydrogen 1-octadecenylbutanedioate | 125109–81–1 | none |
| * * * * * | * * | |

* * * * *

■ 3. Section 180.950 is amended by alphabetically adding entries to the table in paragraph (e) to read as follows:

**§ 180.950 Tolerance exemptions for minimal risk active and inert ingredients.**

* * * * *

(e) * * *

| Chemical | CAS No. |
|---|---|
| * * | * * * |
| Amylopectin, acid-hydrolyzed, 1-octenylbutanedioate | 113894–85–2 |
| Amylopectin, hydrogen 1-octadecenylbutanedioate | 125109–81–1 |
| * * | * * * |

[FR Doc. E8–21737 Filed 9–16–08; 8:45 am]

BILLING CODE 6560–50–S

## ENVIRONMENTAL PROTECTION AGENCY

## 40 CFR Part 180

**[EPA–HQ–OPP–2007–0894; FRL–8382–6]**

## Ethoprop; Pesticide Tolerances

**AGENCY:** Environmental Protection Agency (EPA).

**ACTION:** Final rule.

**SUMMARY:** This regulation establishes tolerances for residues of ethoprop in or on hop, dried cones; peppermint, tops; and spearmint, tops. Interregional Research Project Number 4 (IR-4) requested these tolerances under the Federal Food, Drug, and Cosmetic Act (FFDCA).

**DATES:** This regulation is effective September 17, 2008. Objections and requests for hearings must be received on or before November 17, 2008, and must be filed in accordance with the instructions provided in 40 CFR part 178 (see also Unit I.C. of the **SUPPLEMENTARY INFORMATION**).

**ADDRESSES:** EPA has established a docket for this action under docket identification (ID) number EPA–HQ–OPP–2007–0894. All documents in the docket are listed in the docket index available at *http://www.regulations.gov*. Although listed in the index, some information is not publicly available, e.g., Confidential Business Information (CBI) or other information whose disclosure is restricted by statute. Certain other material, such as copyrighted material, is not placed on the Internet and will be publicly available only in hard copy form. Publicly available docket materials are available in the electronic docket at *http://www.regulations.gov*, or, if only available in hard copy, at the OPP Regulatory Public Docket in Rm. S–4400, One Potomac Yard (South Bldg.), 2777 S. Crystal Dr., Arlington, VA. The Docket Facility is open from 8:30 a.m. to 4 p.m., Monday through Friday, excluding legal holidays. The Docket Facility telephone number is (703) 305–5805.

**FOR FURTHER INFORMATION CONTACT:** Susan Stanton, Registration Division (7505P), Office of Pesticide Programs, Environmental Protection Agency, 1200 Pennsylvania Ave., NW., Washington, DC 20460–0001; telephone number: (703) 305–5218; e-mail address: *stanton.susan@epa.gov*.

**SUPPLEMENTARY INFORMATION:**

### I. General Information

*A. Does this Action Apply to Me?*

You may be potentially affected by this action if you are an agricultural producer, food manufacturer, or pesticide manufacturer. Potentially affected entities may include, but are not limited to those engaged in the following activities:

- Crop production (NAICS code 111).
- Animal production (NAICS code 112).
- Food manufacturing (NAICS code 311).
- Pesticide manufacturing (NAICS code 32532).

This listing is not intended to be exhaustive, but rather to provide a guide for readers regarding entities likely to be affected by this action. Other types of entities not listed in this unit could also be affected. The North American Industrial Classification System (NAICS) codes have been provided to assist you and others in determining whether this action might apply to certain entities. If you have any questions regarding the applicability of this action to a particular entity, consult the person listed under **FOR FURTHER INFORMATION CONTACT**.

*B. How Can I Access Electronic Copies of this Document?*

In addition to accessing electronically available documents at *http://www.regulations.gov*, you may access this **Federal Register** document electronically through the EPA Internet under the ''**Federal Register**'' listings at *http://www.epa.gov/fedrgstr*. You may also access a frequently updated electronic version of EPA's tolerance regulations at 40 CFR part 180 through the Government Printing Office's pilot e-CFR site at *http://www.gpoaccess.gov/ecfr*.

*C. Can I File an Objection or Hearing Request?*

Under section 408(g) of FFDCA, 21 U.S.C. 346a, any person may file an objection to any aspect of this regulation and may also request a hearing on those objections. You must file your objection or request a hearing on this regulation in accordance with the instructions provided in 40 CFR part 178. To ensure proper receipt by EPA, you must

identify docket ID number EPA–HQ–OPP–2007–0894 in the subject line on the first page of your submission. All requests must be in writing, and must be mailed or delivered to the Hearing Clerk as required by 40 CFR part 178 on or before November 17, 2008.

In addition to filing an objection or hearing request with the Hearing Clerk as described in 40 CFR part 178, please submit a copy of the filing that does not contain any CBI for inclusion in the public docket that is described in **ADDRESSES**. Information not marked confidential pursuant to 40 CFR part 2 may be disclosed publicly by EPA without prior notice. Submit this copy, identified by docket ID number EPA–HQ–OPP–2007–0894, by one of the following methods:

- *Federal eRulemaking Portal*: *http://www.regulations.gov*. Follow the on-line instructions for submitting comments.
- *Mail*: Office of Pesticide Programs (OPP) Regulatory Public Docket (7502P), Environmental Protection Agency, 1200 Pennsylvania Ave., NW., Washington, DC 20460–0001.
- *Delivery*: OPP Regulatory Public Docket (7502P), Environmental Protection Agency, Rm. S–4400, One Potomac Yard (South Bldg.), 2777 S. Crystal Dr., Arlington, VA. Deliveries are only accepted during the Docket Facility's normal hours of operation (8:30 a.m. to 4 p.m., Monday through Friday, excluding legal holidays). Special arrangements should be made for deliveries of boxed information. The Docket Facility telephone number is (703) 305–5805.

## II. Petition for Tolerance

In the **Federal Register** of September 28, 2007 (72 FR 55204) (FRL–8147–1), EPA issued a notice pursuant to section 408(d)(3) of FFDCA, 21 U.S.C. 346a(d)(3), announcing the filing of pesticide petitions (PP 5E4491 and PP 7E7247) by Interregional Research Project Number 4 (IR-4), 500 College Road East, Suite 201, Princeton, NJ 08540. The petitions requested that 40 CFR 180.262 be amended by establishing tolerances for residues of the insecticide and nematicide, ethoprop, *O*-ethyl *S,S*-dipropyl phosphorodithioate, in or on hop, dried cone (PP7E7247) and mint, hay (PP 5E4491) at 0.02 parts per million (ppm). That notice referenced a summary of the petitions prepared by Bayer CropScience, the registrant, on behalf of IR-4, which is available to the public in the docket, *http://www.regulations.gov*. There were no comments received in response to the notice of filing.

IR-4 proposed a tolerance on the commodity ''mint, hay'' at 0.02 ppm. EPA has determined that separate tolerances at 0.02 ppm should be established on the commodities ''spearmint, tops'' and ''peppermint, tops'' instead of the single tolerance on ''mint, hay'' to agree with the preferred commodity terms in the Agency's Food and Feed Commodity Vocabulary. EPA has also modified the commodity term ''hop, dried cone'' slightly to read ''hop, dried cones'' to agree with the Food and Feed Commodity Vocabulary.

## III. Aggregate Risk Assessment and Determination of Safety

Section 408(b)(2)(A)(i) of FFDCA allows EPA to establish a tolerance (the legal limit for a pesticide chemical residue in or on a food) only if EPA determines that the tolerance is ''safe.'' Section 408(b)(2)(A)(ii) of FFDCA defines ''safe'' to mean that ''there is a reasonable certainty that no harm will result from aggregate exposure to the pesticide chemical residue, including all anticipated dietary exposures and all other exposures for which there is reliable information.'' This includes exposure through drinking water and in residential settings, but does not include occupational exposure. Section 408(b)(2)(C) of FFDCA requires EPA to give special consideration to exposure of infants and children to the pesticide chemical residue in establishing a tolerance and to ''ensure that there is a reasonable certainty that no harm will result to infants and children from aggregate exposure to the pesticide chemical residue....''

Consistent with section 408(b)(2)(D) of FFDCA, and the factors specified in section 408(b)(2)(D) of FFDCA, EPA has reviewed the available scientific data and other relevant information in support of this action. EPA has sufficient data to assess the hazards of and to make a determination on aggregate exposure for the petitioned-for tolerances for residues of ethoprop on hop, dried cones; peppermint, tops; and spearmint, tops at 0.02 ppm. EPA's assessment of exposures and risks associated with establishing tolerances follows.

### *A. Toxicological Profile*

EPA has evaluated the available toxicity data and considered its validity, completeness, and reliability as well as the relationship of the results of the studies to human risk. EPA has also considered available information concerning the variability of the sensitivities of major identifiable subgroups of consumers, including infants and children.

The toxic mode of action of ethoprop in insects and humans is by phosphorylation of the acetylcholinesterase (referred to as cholinesterase or ChE in this document) enzyme in the brain and peripheral nervous systems. The resulting enzyme inhibition causes accumulation of the neurotransmitter, acetylcholine, and resulting signs of neurotoxicity.

Ethoprop is acutely toxic by both oral and dermal routes. In the longer term studies, the most sensitive indication of toxicity was inhibition of brain and red blood cell (RBC) ChE. Signs of neurotoxicity related to inhibition of ChE by ethoprop include tremors, ataxia, muscle fasiculations, lacrimation, salivation, rapid/shallow respiration, repetitive chewing movements, nasal and perianal stains, vocalization, aggressive behavior, decreased grip strength, and decreased motor activity. A slight anemia and liver toxicity (elevated liver enzymes and microscopic liver lesions) were also noted in dog studies.

Ethoprop is classified ''likely to be carcinogenic to humans'' based on malignant adrenal pheochromocytomas in male rats and is regulated by EPA using the linear low dose extrapolation approach with a potency factor ($Q_1$*) of $2.81 \times 10^{-2}$ milligrams/kilogram/day $(mg/kg/day)^{-1}$.

No developmental toxicity was noted in rat and rabbit developmental studies. In the rat developmental toxicity study, maternal toxicity included decreased body weight gain and increased incidence of soft stool, the latter effect attributed to ChE inhibition. No maternal toxicity occurred in the rabbit developmental study. Despite the absence of toxicity in this study, dosing was considered adequate, since the highest dose was close to the lethal dose determined in the range-finding developmental rabbit study. Ethoprop did not affect reproductive parameters in the 2-generation reproduction toxicity study in rats. Pup mortality in this study occurred at a high dietary concentration and was accompanied by significant maternal toxicity (clinical signs of tremors and loose stool and brain ChE inhibition).

In the developmental neurotoxicity (DNT) study, an effect on learning in the water maze test was noted in high-dose males. Motor activity in all male treatment groups was increased on postnatal day 17 due to a lack of habituation (i.e., there was little or no decrease in activity over the course of the test session). There was no indication of increased fetal or offspring sensitivity to ChE inhibition in this study.

The relative sensitivities of adult rats and 11–day old rat pups to ChE

inhibition were compared in acute and 11–day comparative cholinesterase studies. Pups were 8 times as sensitive as adults for brain ChE inhibition in the acute study and were 12 times as sensitive as adults in the 11–day study. Pup sensitivity is believed to be due to their immature metabolic capacity.

Specific information on the studies received and the nature of the adverse effects caused by ethoprop, as well as the no-observed-adverse-effect-level (NOAEL) and the lowest-observed-adverse-effect-level (LOAEL) from the toxicity studies, can be found at *http://www.regulations.gov* in the document *Ethoprop Human Health Risk Assessment of New Uses on Hops and Mint* at page 47 in docket ID number EPA–HQ–OPP–2007–0894.

*B. Toxicological Endpoints*

For hazards that have a threshold below which there is no appreciable risk, a toxicological point of departure (POD) is identified as the basis for derivation of reference values for risk assessment. The POD may be defined as the highest dose at which no adverse effects are observed (the NOAEL) in the toxicology study identified as appropriate for use in risk assessment. However, if a NOAEL cannot be determined, the lowest dose at which adverse effects of concern are identified (the LOAEL) or a Benchmark Dose (BMD) approach is sometimes used for risk assessment. Uncertainty/safety factors (UFs) are used in conjunction with the POD to take into account uncertainties inherent in the extrapolation from laboratory animal data to humans and in the variations in sensitivity among members of the human population as well as other unknowns. Safety is assessed for acute and chronic dietary risks by comparing aggregate food and water exposure to the pesticide to the acute population adjusted dose (aPAD) and chronic population adjusted dose (cPAD). The aPAD and cPAD are calculated by dividing the POD by all applicable UFs. Aggregate short-term, intermediate-term, and chronic-term risks are evaluated by comparing food, water, and residential exposure to the POD to ensure that the margin of exposure (MOE) called for by the product of all applicable UFs is not exceeded. This latter value is referred to as the Level of Concern (LOC).

For non-threshold risks, the Agency assumes that any amount of exposure will lead to some degree of risk. Thus, the Agency estimates risk in terms of the probability of an occurrence of the adverse effect greater than that expected in a lifetime. For more information on the general principles EPA uses in risk characterization and a complete description of the risk assessment process, see *http://www.epa.gov/pesticides/factsheets/riskassess.htm*.

A summary of the toxicological endpoints for ethoprop used for human risk assessment can be found at *http://www.regulations.gov* in the document *Ethoprop Human Health Risk Assessment of New Uses on Hops and Mint* at page 20 in docket ID number EPA–HQ–OPP–2007–0894.

*C. Exposure Assessment*

1. *Dietary exposure from food and feed uses*. In evaluating dietary exposure to ethoprop, EPA considered exposure under the petitioned-for tolerances as well as all existing ethoprop tolerances in 40 CFR 180.262, except peanuts. Although tolerances for peanuts and peanut hay have been established, there have been no active registrations for use of ethoprop on peanuts since April, 2002, and the Agency proposed to revoke the peanut tolerances in the **Federal Register** of June 4, 2008 (73 FR 31788) (FRL–8363–9). For these reasons, peanuts were not considered in the dietary assessment.

The residues of concern for acute and chronic dietary risk assessment include parent ethoprop and the metabolites S-ME, *O*-ethyl-*S*-methyl-*S*-propylphosphorodithioate, and O-ME, *O*-ethyl-*O*-methyl-*S*-propylphosphorothioate. For cancer dietary risk, the residues of concern are parent and the metabolites S-ME-, O-ME and M-1, *O*-ethyl-*S*-propyl phosphorodithioate. Since the available field trial and monitoring data do not include information on the metabolites, metabolite ratios derived from metabolism and rotational crop studies were used to estimate metabolite levels in ethoprop-treated commodities. Further information on the development of the metabolite ratios can be found at *http://www.regulations.gov* in the document *Ethoprop. Anticipated Residues to Support New Uses on Hops and Mint* in docket ID number EPA–HQ–OPP–2007–0894. EPA assessed dietary exposures from the combined residues of ethoprop and its metabolites of concern in food as follows:

i. *Acute exposure*. Quantitative acute dietary exposure and risk assessments are performed for a food-use pesticide, if a toxicological study has indicated the possibility of an effect of concern occurring as a result of a 1–day or single exposure.

In estimating acute dietary exposure, EPA used food consumption information from the United States Department of Agriculture (USDA) 1994–1996 and 1998 Nationwide Continuing Surveys of Food Intakes by Individuals (CSFII). As to residue levels in food, EPA relied on anticipated residues derived from field trials or monitoring data from USDA's Pesticide Data Program (PDP) for most commodities. PDP data were used to develop anticipated residues for bananas, snap beans (fresh and canned), corn syrup, cucumber, pineapple, potato and sweet potato. Field trial data were used for field corn, sweet corn, sugarcane and cabbage. EPA assumed tolerance-level residues for lima beans and the new commodities, hops and mint. Acute dietary exposure estimates were further refined using maximum percent crop treated (PCT) estimates for snap beans, cabbage, sweet corn, field corn, cucumber, potatoes, sugarcane and sweet potato. EPA assumed 100 PCT for bananas, lima beans, pineapple, hops and mint.

ii. *Chronic exposure*. In conducting the chronic dietary exposure assessment EPA used the food consumption data from the USDA 1994–1996 and 1998 CSFII. As to residue levels in food, EPA relied on anticipated residues derived from field trials or PDP monitoring data for the same commodities specified above under ''*Acute exposure*.'' Again, EPA assumed tolerance-level residues for lima beans, hops and mint. Chronic dietary exposure estimates were further refined using average percent crop treated (PCT) estimates for snap beans, cabbage, sweet corn, field corn, cucumber, potatoes, sugarcane and sweet potato. EPA assumed 100 PCT for bananas, lima beans, pineapple, hops and mint.

iii. *Cancer*. Cancer risk was assessed using the linear low dose extrapolation approach with a potency factor (Q1*) of $2.81 \times 10^{-2}$ $(mg/kg/day)^{-1}$ . In conducting the cancer dietary exposure assessment EPA used the food consumption data from the USDA 1994–1996 and 1998 CSFII and the same field trial/PDP monitoring data and PCT data used in the chronic assessment. Different metabolite ratios were used, since the metabolites of concern for cancer risk differ from the metabolites of concern for chronic risk.

iv. *Anticipated residue and percent crop treated (PCT) information*. Section 408(b)(2)(E) of FFDCA authorizes EPA to use available data and information on the anticipated residue levels of pesticide residues in food and the actual levels of pesticide residues that have been measured in food. If EPA relies on such information, EPA must require pursuant to FFDCA section 408(f)(1) that data be provided 5 years after the tolerance is established, modified, or left in effect, demonstrating that the

levels in food are not above the levels anticipated. For the present action, EPA will issue such data call-ins as are required by FFDCA section 408(b)(2)(E) and authorized under FFDCA section 408(f)(1). Data will be required to be submitted no later than 5 years from the date of issuance of these tolerances.

Section 408(b)(2)(F) of FFDCA states that the Agency may use data on the actual percent of food treated for assessing chronic dietary risk only if:

- Condition a: The data used are reliable and provide a valid basis to show what percentage of the food derived from such crop is likely to contain the pesticide residue.
- Condition b: The exposure estimate does not underestimate exposure for any significant subpopulation group.
- Condition c: Data are available on pesticide use and food consumption in a particular area, the exposure estimate does not understate exposure for the population in such area.

In addition, the Agency must provide for periodic evaluation of any estimates used. To provide for the periodic evaluation of the estimate of PCT as required by FFDCA section 408(b)(2)(F), EPA may require registrants to submit data on PCT.

The Agency used PCT information as follows:

*Acute dietary exposure assessment:* Snap beans 5%; cabbage 5%; sweet corn 5%; field corn 2.5%; cucumber 5%; potatoes 5%; sugarcane 5%; and sweet potato 15%.

*Chronic and cancer dietary exposure assessments:* Snap beans 5%; cabbage 5%; sweet corn 1%; field corn 1%; cucumber 1%; potatoes 5%; sugarcane 5%; and sweet potato 15%.

In most cases, EPA uses available data from the United States Department of Agriculture/National Agricultural Statistics Service (USDA/NASS), proprietary market surveys, and the National Pesticide Use Database for the chemical/crop combination for the most recent 6 years. EPA uses an average PCT for chronic dietary risk analysis. The average PCT figure for each existing use is derived by combining available public and private market survey data for that use, averaging across all observations, and rounding to the nearest 5%, except for those situations in which the average PCT is less than one. In those cases, 1% is used as the average PCT and 2.5% is used as the maximum PCT. EPA uses a maximum PCT for acute dietary risk analysis. The maximum PCT figure is the highest observed maximum value reported within the recent 6 years of available public and private market survey data for the existing use and rounded up to the nearest multiple of 5%.

The Agency believes that the three conditions discussed in Unit III.C.1.iv. have been met. With respect to Condition a, PCT estimates are derived from Federal and private market survey data, which are reliable and have a valid basis. The Agency is reasonably certain that the percentage of the food treated is not likely to be an underestimation. As to Conditions b and c, regional consumption information and consumption information for significant subpopulations is taken into account through EPA's computer-based model for evaluating the exposure of significant subpopulations including several regional groups. Use of this consumption information in EPA's risk assessment process ensures that EPA's exposure estimate does not understate exposure for any significant subpopulation group and allows the Agency to be reasonably certain that no regional population is exposed to residue levels higher than those estimated by the Agency. Other than the data available through national food consumption surveys, EPA does not have available reliable information on the regional consumption of food to which ethoprop may be applied in a particular area.

2. *Dietary exposure from drinking water.* Concerns about the potential for ethoprop or its metabolites to reach water used for drinking water at levels of concern were identified in the *''Interim Reregistration Eligibility Decision for Ethoprop''*, published in September, 2001 and available on the Office of Pesticide Programs' web site at *http://www.epa.gov/pesticides/reregistration/status.htm*. EPA's concerns were based on screening drinking water assessments conducted using the Pesticide Root Zone Model/Exposure Analysis Modeling System (PRZM/EXAMS) and Screening Concentration in Ground Water (SCI-GROW) models, which indicated potential drinking water concentrations above EPA's levels of concern for acute and cancer exposures. As a result of these concerns, the registrant was required by the Agency to conduct targeted monitoring surveys of presumed high vulnerability community water supplies to determine concentrations of ethoprop that may occur in ground water and surface water. The monitoring data required by EPA have been submitted and reviewed and demonstrate considerably lower water concentrations of ethoprop than the modeled values (by more than 2 orders of magnitude). Although the monitoring surveys do not reflect the new uses on hops and mint, EPA does not expect the new uses to contribute substantially to high-end ethoprop drinking water exposure, since both of the proposed use sites are of minor acreage, and the production regions do not correspond to the areas that were found to be at greatest risk for drinking water exposure. Therefore, EPA believes the monitoring survey results represent reasonable estimates of ethoprop residues likely to occur in drinking water from all existing and new uses. Although the highest measured values from the monitoring surveys do not represent the peak concentrations that could occur in drinking water, the theoretical peak is highly likely to be much closer to the monitoring values than the modeled values, in part because the usage intensity (i.e., pounds active ingredient per acre) assumed by the model is 250 to 500 times the highest actual watershed-wide usage intensity estimated in the monitoring study; and sales data recently submitted by the registrant show that ethoprop usage has gradually declined nationwide since the drinking water study was completed. Therefore, the Agency relied on the monitoring survey data in assessing drinking water exposures to ethoprop and its degradates of concern as described below.

The sum of the highest concentrations of ethoprop and its drinking water degradates of concern (S-ME; O-ME; O-HE, *O*-ethyl-*S*-propylphosphorothioate; and SSDP, *S,S*-dipropylphosphorodithioate) measured in the targeted monitoring surveys was 0.231 parts per billion (ppb). This water concentration value was directly entered into the dietary exposure model and used to assess acute, chronic and cancer drinking water exposures to ethoprop. Recognizing that this value does not represent the theoretical peak ethoprop drinking water concentration, EPA conducted additional acute, chronic and cancer dietary analyses using a drinking water concentration of 0.52 ppb, equivalent to more than 2x the highest measured monitoring value. For the drinking water exposure scenarios of greatest concern (acute and cancer), EPA also conducted analyses using the highest drinking water concentration that would result in aggregate risks below the level of concern: 15 ppb (65x the highest monitoring value) for the acute assessment and 5 ppb (22x the highest monitoring value) for the cancer assessment.

EPA notes that the highest measured concentrations of ethoprop used in the dietary assessment occurred in raw water and, therefore, do not account for

any mitigation of exposure that might occur as a result of water treatment. The registrant did analyze finished water on dates for which raw water bore detectable residues, and the concentrations in finished water were generally lower than those in raw water samples taken on the same day.

3. *From non-dietary exposure*. The term ''residential exposure'' is used in this document to refer to non-occupational, non-dietary exposure (e.g., for lawn and garden pest control, indoor pest control, termiticides, and flea and tick control on pets).

Ethoprop is not registered for any specific use patterns that would result in residential exposure.

4. *Cumulative effects from substances with a common mechanism of toxicity*. Section 408(b)(2)(D)(v) of FFDCA requires that, when considering whether to establish, modify, or revoke a tolerance, the Agency consider ''available information'' concerning the cumulative effects of a particular pesticide's residues and ''other substances that have a common mechanism of toxicity.'' The reason for consideration of other substances is due to the possibility that low-level exposures to multiple chemical substances that cause a common toxic effect by a common mechanism could lead to the same adverse health effect as would a higher level of exposure to any of the substances individually. A person exposed to a pesticide at a level that is considered safe may, in fact, experience harm if that person is also exposed to other substances that cause a common toxic effect by a mechanism common with that of the subject pesticide, even if the individual exposure levels to the other substances are also considered safe.

The organophosphate pesticides (OPs) were established as the first common mechanism group by EPA in 1999, based on their shared ability to bind to and phosphorylate the enzyme acetylcholinesterase in both the central (brain) and peripheral nervous systems. Ethoprop is an OP pesticide. In December 2001, the Agency issued the ''Preliminary OP Cumulative Risk Assessment'', available at *http://www.epa.gov/pesticides/cumulative/pra_op_methods.htm*. In June 2002, the Agency released its Revised OP CRA, available at *http://www.epa.gov/pesticides/cumulative/rra-op/*, which included the cumulative risk due to the OPs from exposures in food, drinking water and residential uses. In August 2006, the Agency issued an update to the 2002 Revised OP CRA document, which emphasized changes, modifications and amendments. With the 2006 update, available at *http://www.epa.gov/pesticides/cumulative/2006-op/index.htm*, the Agency has developed a highly refined and complex cumulative risk assessment for the OPs that represents the state of the science regarding existing hazard and exposure data and the models and approaches used. Based upon the results from the 2006 update, the Agency concluded that the results of the OP cumulative risk assessment support a reasonable certainty of no harm finding.

In both the 2002 revised OP CRA, as well as the 2006 update, the cumulative dietary risk associated with the use of OP pesticides on food crops was assessed using residue monitoring data collected by the USDA Pesticide Data Program (PDP) and dietary consumption data collected by USDA's CSFII. Both assessments relied primarily on the PDP for residue data; the 2006 update added PDP data collected in 2002–2004 to the 1994–2001 data used in the 2002 Revised Assessment. The PDP has been collecting pesticide residue data since 1991, primarily for purposes of estimating dietary exposure. The program focuses on high-consumption foods for children and reflects foods typically available throughout the year. A complete description of the PDP and all data through 2004 are available online at *http://www.ams.usda.gov/science/pdp*. No PDP data on mint or hops currently exist that could have been used in a cumulative assessment. OP residues in hops and mint were not included in the PDP database, in part because hops and mint are low-consumption foods. A quantitative estimate of mint consumption over a single day was obtained for the general U.S. population and subpopulations using the Dietary Exposure Evaluation Model (DEEM-FCID(™), Version 2.03), which uses food consumption data from the USDA's CSFII from 1994–1996 and 1998. The maximum consumption estimate at the 99.9th percentile of exposure for all populations is less than 0.1 grams mint/day. Hops are used when brewing beer, and there can be relatively high consumption of beer in some population groups. However, the relative amount of hops used in brewing beer, on a weight basis, is low, so hops consumption is low as well.

EPA does not believe that inclusion of ethoprop residues in hops and mint in the OP CRA will significantly modify the calculated risk. First, hops and mint are low consumption foods, and, thus, even if hops and mint contained quantifiable levels of OPs, it would be unlikely to significantly alter the OP CRA. Secondly, residues of ethoprop in hops and mint are non-detectable at the label application rate, based on controlled crop field trials. Also, there is virtually no difference in ethoprop exposure when hops and mint are excluded from the dietary exposure assessment. If ethoprop exposure from hops and mint is insignificant in comparison to exposure to ethoprop from other uses of the chemical, it necessarily is insignificant in comparison to exposure to the more than 30 other OPs. For these reasons, EPA concludes that the establishment of ethoprop hops and mint tolerances will not raise a concern regarding cumulative OP exposure.

*D. Safety Factor for Infants and Children*

1. *In general*. Section 408(b)(2)(c) of FFDCA provides that EPA shall apply an additional tenfold (10X) margin of safety for infants and children in the case of threshold effects to account for prenatal and postnatal toxicity and the completeness of the database on toxicity and exposure unless EPA determines based on reliable data that a different margin of safety will be safe for infants and children. This additional margin of safety is commonly referred to as the FQPA safety factor (SF). In applying this provision, EPA either retains the default value of 10X, or uses a different additional safety factor when reliable data available to EPA support the choice of a different factor.

2. *Prenatal and postnatal sensitivity*. The following acceptable studies are available for assessing potential sensitivity of infants and children to ethoprop: Rat and rabbit developmental toxicity studies, a DNT study in rats, a 2-generation reproduction toxicity study in rats, acute and subchronic neurotoxicity studies, an acute comparative cholinesterase study in adult and rat pups, and an 11–day comparative cholinesterase study in adult and rat pups. There was no evidence of increased quantitative or qualitative susceptibility to ethoprop of *in utero* rats or rabbits in the developmental toxicity studies and no evidence of increased susceptibility of fetuses or offspring in the DNT study. In the DNT study the NOAEL for brain ChE activity in pups was the same as for adults and the NOAEL for RBC ChE activity was greater in pups than for adults. Fetuses were less sensitive to ChE inibition by ethoprop than were the adults.

Pup mortality in the 2-generation reproduction study occurred at a high dietary concentration and was accompanied by significant maternal toxicity (clinical signs of tremors and loose stool and brain ChE inhibition).

The NOAEL for pup mortality was 13 mg/kg/day. Because the POD for chronic dietary exposure (0.14 mg/kg/day) is much lower than the NOAEL for pup mortality and is protective of this endpoint, there are no residual concerns for sensitivity to infants and children from this study.

In the acute comparative cholinesterase study, pups were eight times as sensitive as adults for brain ChE inhibition. This study was used to select a POD for acute dietary assessment. Because the POD is protective of the population of concern, there are no residual concerns from this study.

In the 11–day comparative cholinesterase study, pups were 12 times as sensitive as adults for brain ChE inhibition. This study was used to select a POD for chronic dietary assessment. Because the POD is protective of the population of concern, there are no residual concerns from this study.

3. *Conclusion*. EPA has determined that reliable data show the safety of infants and children would be adequately protected if the FQPA SF were reduced to 1X. That decision is based on the following findings:

i. The toxicity database for ethoprop is complete, except for immunotoxicity studies. EPA began requiring functional immunotoxicity testing of all food and non-food use pesticides on December 26, 2007. Since this requirement went into effect well after the tolerance petitions were submitted, these studies are not yet available for ethoprop. In the absence of specific immunotoxicity studies, EPA has evaluated the available ethoprop toxicity data to determine whether an additional database uncertainty factor is needed to account for potential immunotoxicity. Ethoprop does not belong to a class of chemicals that would be expected to be immunotoxic; however, there was some indication of possible immunotoxicity in the form of decreased white blood cell counts in high-dose males (4 mg/kg/day) in the mouse carcinogenicity study. Since the dose at which this effect was seen is nearly 30 times higher than the BMDL10 of 0.14 mg/kg/day already established for ethoprop, and since there was no other evidence of immunotoxicity in the ethoprop toxicity studies, EPA does not believe that conducting immunotoxicity testing will result in a lower POD for ethoprop, and an additional database uncertainty factor for ethoprop is not needed to account for potential immunotoxicity.

ii. Ethoprop is a neurotoxic chemical. Although there is evidence in the acute and 11–day comparative cholinesterase studies of increased offspring senstivity to ChE inhibition by ethoprop, there are no residual uncertainties with regard to these effects in infants and children. The points of departure for acute and chronic dietary assessment are based on brain ChE inhibition in pups in the comparative cholinesterase studies. Benchmark dose (BMD) modeling was used to select points of departure for dietary exposure. In comparison to other toxicity studies, the comparative cholinesterase studies had much closer dose spacing around the NOAEL and LOAEL doses and thus provided an accurate determination of BMDL10 values (the lower 95% confidence limit on the estimated mean brain ChE inhibition 10% effect level) used to evaluate risk. Furthermore, since the comparative cholinesterase studies provided an assessment of comparative sensitivity of adults and offspring; and provided the lowest, most sensitive points of departure for the most vulnerable population, the points of departure based on these studies are protective of other toxic effects.

iii. There is no evidence that ethoprop results in increased susceptibility in *in utero* rats or rabbits in the prenatal developmental studies. Although there is some evidence of increased qualitative susceptibility of offspring in the 2-generation reproduction study (pup mortality vs. clinical signs of tremors, loose stool and brain ChE inhibition in maternal animals), the Agency did not identify any residual uncertainties after establishing toxicity endpoints and traditional UFs to be used in the risk assessment.

iv. There are no residual uncertainties identified in the exposure databases. The dietary food exposure assessments utilized anticipated residues that are based on reliable field trial or monitoring data. For most currently registered commodities, the dietary assessments also utilized PCT data that have a valid basis and are considered to be reliable. The drinking water exposure assessments utilized targeted monitoring data from vulnerable community raw water supplies intended to provide reasonably conservative (i.e., high-end) estimates of drinking water concentrations. To account for the possibility of higher drinking water concentrations than those measured in the monitoring surveys, EPA utilized concentrations from 2x to 65x the highest measured value in the dietary exposure assessments. Residential exposure to ethoprop is not expected to occur. These assessments will not underestimate the exposure and risks posed by ethoprop.

*E. Aggregate Risks and Determination of Safety*

EPA determines whether acute and chronic pesticide exposures are safe by comparing aggregate exposure estimates to the aPAD and cPAD. The aPAD and cPAD represent the highest safe exposures, taking into account all appropriate SFs. EPA calculates the aPAD and cPAD by dividing the POD by all applicable UFs. For linear cancer risks, EPA calculates the probability of additional cancer cases given the estimated aggregate exposure. Short-, intermediate-, and chronic-term risks are evaluated by comparing the estimated aggregate food, water, and residential exposure to the POD to ensure that the MOE called for by the product of all applicable UFs is not exceeded.

1. *Acute risk*. An acute aggregate risk assessment takes into account exposure estimates from acute dietary consumption of food and drinking water. Using the food exposure assumptions discussed in this unit for acute exposure and the highest measured concentrations of ethoprop and its degradates from the targeted drinking water monitoring surveys (0.231 ppb), the acute dietary exposure from food and water to ethoprop will occupy 18% of the aPAD for infants less than 1 year old, the population group receiving the greatest exposure. Using a drinking water estimate for ethoprop and its degradates of 0.52 ppb, equivalent to more than 2x the maximum measured value from monitoring data, acute dietary exposure to ethoprop from food and water will occupy 19% of the aPAD for infants less than 1 year old. These acute dietary risk estimates are based on high-end exposures at the 99.9th percentile.

2. *Chronic risk*. Using the food exposure assumptions described in this unit for chronic exposure and the highest measured concentrations of ethoprop and its degradates from the targeted drinking water monitoring surveys (0.231 ppb), EPA has concluded that chronic exposure to ethoprop from food and water will utilize 2.7% of the cPAD for infants less than 1 year old and children 1 to 2 years old, the population groups receiving the greatest exposure. Using a drinking water estimate for ethoprop and its degradates of 0.52 ppb, equivalent to more than 2x the maximum measured value, chronic dietary exposure to ethoprop from food and water will occupy 4.2% of the cPAD for infants less than 1 year old and 3.4% for children 1 to 2 years old. There are no residential uses for ethoprop.

3. *Short-term and intermediate-term risk.* Short-term and intermediate-term aggregate exposures take into account short-term or intermediate-term residential exposure plus chronic exposure to food and water (considered to be a background exposure level). Ethoprop is not registered for any use patterns that would result in residential exposure. Therefore, the short-term or intermediate-term aggregate risk is the sum of the risk from exposure to ethoprop through food and water and will not be greater than the chronic aggregate risk.

4. *Aggregate cancer risk for U.S. population.* Using the food exposure assumptions described in this unit for the cancer risk assessment and the highest measured concentrations of ethoprop and its degradates from the targeted drinking water monitoring surveys (0.231 ppb), EPA has concluded that exposure to ethoprop from food and water will result in a lifetime cancer risk of $4 \times 10^{-7}$ for the U.S. population. EPA generally considers cancer risks in the range of $10^{-6}$ or less to be negligible. Residues of ethoprop and its degradates of concern in drinking water could be as high as 5 ppb (22x the highest measured monitoring value) before lifetime cancer risk exceeded this level.

6. *Determination of safety.* Based on these risk assessments, EPA concludes that there is a reasonable certainty that no harm will result to the general population, or to infants and children from aggregate exposure to ethoprop residues.

## IV. Other Considerations

### *A. Analytical Enforcement Methodology*

Adequate enforcement methodology is available to enforce the tolerance expression. Two gas chromatography (GC)/sulfur microcoulometric detection methods are available in the Pesticide Analytical Methods, Volume II (Methods I and A). Both involve solvent extraction and clean-up by sweep co-distillation and have a reported limit of quantitation (LOQ) of 0.01 ppm for most commodities.

### *B. International Residue Limits*

There are no Canadian, CODEX or Mexican Maximum Residue Limits established for residues of ethoprop on mint or hops.

## V. Conclusion

Therefore, tolerances are established for residues of ethoprop, *O*-ethyl *S,S*-dipropyl phosphorodithioate, in or on hop, dried cones; peppermint, tops; and spearmint, tops at 0.02 ppm.

## VI. Statutory and Executive Order Reviews

This final rule establishes tolerances under section 408(d) of FFDCA in response to petitions submitted to the Agency. The Office of Management and Budget (OMB) has exempted these types of actions from review under Executive Order 12866, entitled *Regulatory Planning and Review* (58 FR 51735, October 4, 1993). Because this final rule has been exempted from review under Executive Order 12866, this final rule is not subject to Executive Order 13211, entitled *Actions Concerning Regulations That Significantly Affect Energy Supply, Distribution, or Use* (66 FR 28355, May 22, 2001) or Executive Order 13045, entitled *Protection of Children from Environmental Health Risks and Safety Risks* (62 FR 19885, April 23, 1997). This final rule does not contain any information collections subject to OMB approval under the Paperwork Reduction Act (PRA), 44 U.S.C. 3501 *et seq.*, nor does it require any special considerations under Executive Order 12898, entitled *Federal Actions to Address Environmental Justice in Minority Populations and Low-Income Populations* (59 FR 7629, February 16, 1994).

Since tolerances and exemptions that are established on the basis of a petition under section 408(d) of FFDCA, such as the tolerance in this final rule, do not require the issuance of a proposed rule, the requirements of the Regulatory Flexibility Act (RFA) (5 U.S.C. 601 *et seq.*) do not apply.

This final rule directly regulates growers, food processors, food handlers, and food retailers, not States or tribes, nor does this action alter the relationships or distribution of power and responsibilities established by Congress in the preemption provisions of section 408(n)(4) of FFDCA. As such, the Agency has determined that this action will not have a substantial direct effect on States or tribal governments, on the relationship between the national government and the States or tribal governments, or on the distribution of power and responsibilities among the various levels of government or between the Federal Government and Indian tribes. Thus, the Agency has determined that Executive Order 13132, entitled *Federalism* (64 FR 43255, August 10, 1999) and Executive Order 13175, entitled *Consultation and Coordination with Indian Tribal Governments* (65 FR 67249, November 9, 2000) do not apply to this final rule. In addition, this final rule does not impose any enforceable duty or contain any unfunded mandate as described under Title II of the Unfunded Mandates Reform Act of 1995 (UMRA) (Public Law 104–4).

This action does not involve any technical standards that would require Agency consideration of voluntary consensus standards pursuant to section 12(d) of the National Technology Transfer and Advancement Act of 1995 (NTTAA), Public Law 104–113, section 12(d) (15 U.S.C. 272 note).

## VII. Congressional Review Act

The Congressional Review Act, 5 U.S.C. 801 *et seq.*, generally provides that before a rule may take effect, the agency promulgating the rule must submit a rule report to each House of the Congress and to the Comptroller General of the United States. EPA will submit a report containing this rule and other required information to the U.S. Senate, the U.S. House of Representatives, and the Comptroller General of the United States prior to publication of this final rule in the **Federal Register**. This final rule is not a ''major rule'' as defined by 5 U.S.C. 804(2).

## List of Subjects in 40 CFR Part 180

Environmental protection, Administrative practice and procedure, Agricultural commodities, Pesticides and pests, Reporting and recordkeeping requirements.

Dated: September 8, 2008.

**Donald R. Stubbs,**

*Acting Director, Registration Division, Office of Pesticide Programs.*

■ Therefore, 40 CFR chapter I is amended as follows:

## PART 180—[AMENDED]

■ 1. The authority citation for part 180 continues to read as follows:

**Authority:** 21 U.S.C. 321(q), 346a and 371.

■ 2. Section 180.262 is amended by alphabetically adding the following commodities to the table in paragraph (a) to read as follows:

**§ 180.262 Ethoprop; tolerances for residues.**

(a) * * *

| Commodity | Parts per million |
|---|---|
| * * * | * * |
| Hop, dried cones | 0.02 |
| * * * | * * |
| Peppermint, tops | 0.02 |
| * * * | * * |
| Spearmint, tops | 0.02 |
| * * * | * * |

* * * * *

[FR Doc. E8–21589 Filed 9–16–08; 8:45 am]

**BILLING CODE 6560–50–S**

## ENVIRONMENTAL PROTECTION AGENCY

## 40 CFR Part 180

**[EPA–HQ–OPP–2007–0674; FRL–8375–2]**

## 2,4-D, Bensulide, Chlorpyrifos, DCPA, Desmedipham, Dimethoate, Fenamiphos, Metolachlor, Phorate, Sethoxydim, Terbufos, Tetrachlorvinphos, and Triallate; Tolerance Actions

**AGENCY:** Environmental Protection Agency (EPA).

**ACTION:** Final rule.

**SUMMARY:** EPA is revoking certain tolerances for the herbicides metolachlor and sethoxydim and the insecticides chlorpyrifos, dimethoate, fenamiphos, terbufos, and tetrachlorvinphos. Also, EPA is modifying certain tolerances for the herbicides 2,4-D, DCPA, desmedipham, metolachlor, sethoxydim, and triallate and the insecticides chlorpyrifos, dimethoate, fenamiphos, phorate, and tetrachlorvinphos. In addition, EPA is establishing new tolerances for the herbicides bensulide, metolachlor, and sethoxydim and the insecticide chlorpyrifos. The regulatory actions finalized in this document are in follow-up to the Agency's reregistration program under the Federal Insecticide, Fungicide, and Rodenticide Act (FIFRA), and tolerance reassessment program under the Federal Food, Drug, and Cosmetic Act (FFDCA), section 408(q).

**DATES:** This regulation is effective September 17, 2008. Objections and requests for hearings must be received on or before November 17, 2008, and must be filed in accordance with the instructions provided in 40 CFR part 178 (see also Unit I.C. of the **SUPPLEMENTARY INFORMATION**).

**ADDRESSES:** EPA has established a docket for this action under docket identification (ID) number EPA–HQ–OPP–2007–0674. All documents in the docket are listed in the docket index available at *http://www.regulations.gov*. Although listed in the index, some information is not publicly available, e.g., Confidential Business Information (CBI) or other information whose disclosure is restricted by statute. Certain other material, such as copyrighted material, is not placed on the Internet and will be publicly available only in hard copy form. Publicly available docket materials are available in the electronic docket at *http://www.regulations.gov*, or, if only available in hard copy, at the OPP Regulatory Public Docket in Rm. S–4400, One Potomac Yard (South Bldg.), 2777 S. Crystal Dr., Arlington, VA. The Docket Facility is open from 8:30 a.m. to 4 p.m., Monday through Friday, excluding legal holidays. The Docket Facility telephone number is (703) 305–5805.

**FOR FURTHER INFORMATION CONTACT:** Jane Smith, Special Review and Reregistration Division (7508P), Office of Pesticide Programs, Environmental Protection Agency, 1200 Pennsylvania Ave., NW., Washington, DC 20460–0001; telephone number: (703) 308–0048; e-mail address: *smith.jane-scott@epa.gov@epa.gov*.

**SUPPLEMENTARY INFORMATION:**

### I. General Information

*A. Does this Action Apply to Me?*

You may be potentially affected by this action if you are an agricultural producer, food manufacturer, or pesticide manufacturer. Potentially affected entities may include, but are not limited to:

- Crop production (NAICS code 111).
- Animal production (NAICS code 112).
- Food manufacturing (NAICS code 311).
- Pesticide manufacturing (NAICS code 32532).

This listing is not intended to be exhaustive, but rather provides a guide for readers regarding entities likely to be affected by this action. Other types of entities not listed in this unit could also be affected. The North American Industrial Classification System (NAICS) codes have been provided to assist you and others in determining whether this action might apply to certain entities. If you have any questions regarding the applicability of this action to a particular entity, consult the person listed under **FOR FURTHER INFORMATION CONTACT**.

*B. How Can I Access Electronic Copies of this Document?*

In addition to accessing electronically available documents at *http://www.regulations.gov*, you may access this **Federal Register** document electronically through the EPA Internet under the "**Federal Register**" listings at *http://www.epa.gov/fedrgstr*. You may also access a frequently updated electronic version of 40 CFR part 180 through the Government Printing Office's e-CFR site at *http://www.gpoaccess.gov/ecfr*.

*C. Can I File an Objection or Hearing Request?*

Under section 408(g) of FFDCA, 21 U.S.C. 436a, any person may file an objection to any aspect of this regulation and may also request a hearing on those objections. The EPA procedural regulations which govern the submission of objections and requests for hearings appear in 40 CFR part 178. You must file your objection or request a hearing on this regulation in accordance with the instructions provided in 40 CFR part 178. To ensure proper receipt by EPA, you must identify docket ID number EPA–HQ–OPP–2007–0674 in the subject line on the first page of your submission. All requests must be in writing, and must be mailed or delivered to the Hearing Clerk on or before November 17, 2008.

In addition to filing an objection or hearing request with the Hearing Clerk as described in 40 CFR part 178, please submit a copy of the filing that does not contain any CBI for inclusion in the public docket that is described in **ADDRESSES**. Information not marked confidential pursuant to 40 CFR part 2 may be disclosed publicly by EPA without prior notice. Submit your copies, identified by docket ID number EPA–HQ–OPP–2007–0674, by one of the following methods.

- *Federal eRulemaking Portal*: *http://www.regulations.gov*. Follow the on-line instructions for submitting comments.
- *Mail*: Office of Pesticide Programs (OPP) Regulatory Public Docket (7502P), Environmental Protection Agency, 1200 Pennsylvania Ave., NW., Washington, DC 20460–0001.
- *Delivery*: OPP Regulatory Public Docket (7502P), Environmental Protection Agency, Rm. S–4400, One Potomac Yard (South Bldg.), 2777 S. Crystal Dr., Arlington, VA. Deliveries are only accepted during the Docket Facility's normal hours of operation (8:30 a.m. to 4 p.m., Monday through Friday, excluding legal holidays). Special arrangements should be made for deliveries of boxed information. The Docket Facility telephone number is (703) 305–5805.

### II. Background

*A. What Action is the Agency Taking?*

In the **Federal Register** of February 6, 2008 (73 FR 6867) (FRL–8345–2), August 8, 2007 (72 FR 44439) (FRL–8138–8), and May 23, 2007 (72 FR 28912) (FRL–8130–8), EPA issued proposals to revoke, modify, and establish specific tolerances for residues

of the herbicides 2,4-D, bensulide, DCPA, desmedipham, metolachlor, sethoxydim, and triallate and the insecticides chlorpyrifos, fenamiphos, phorate, dimethoate, terbufos, and tetrachlorvinphos. Also, the proposals of February 6, 2008, August 8, 2007, and May 23, 2007, provided a 60–day comment period which invited public comment for consideration and for support of tolerance retention under FFDCA standards.

In this final rule, EPA is revoking, modifying, and establishing specific tolerances for residues of 2,4-D, bensulide, chlorpyrifos, DCPA, desmedipham, dimethoate, fenamiphos, metolachlor, phorate, sethoxydim, terbufos, tetrachlorvinphos, and triallate in or on commodities listed in the regulatory text of this document.

EPA is finalizing these tolerance actions in order to implement the tolerance recommendations made during the reregistration and tolerance reassessment processes (including follow-up on canceled or additional uses of pesticides). As part of these processes, EPA is required to determine whether each of the amended tolerances meets the safety standard of FFDCA. The safety finding determination of ''reasonable certainty of no harm'' is discussed in detail in each Reregistration Eligibility Decision (RED) and Report on Food Quality Protection Act (FQPA) Tolerance Reassessment Progress and Interim Risk Management Decision (TRED) for the active ingredient. REDs and TREDs recommend the implementation of certain tolerance actions, including modifications, to reflect current use patterns, to meet safety findings and change commodity names and groupings in accordance with new EPA policy. Printed copies of many REDs and TREDs may be obtained from EPA's National Service Center for Environmental Publications (EPA/NSCEP), P.O. Box 42419, Cincinnati, OH 45242–2419; telephone number: 1–800–490–9198; fax number: 1–513–489–8695; Internet at *http://www.epa.gov/ncepihom* and from the National Technical Information Service (NTIS), 5285 Port Royal Rd., Springfield, VA 22161; telephone number: 1–800–553–6847 or (703) 605–6000; Internet at *http://www.ntis.gov.* Electronic copies of REDs and TREDs are available on the Internet at *http://www.regulations.gov* and *http:// www.epa.gov/pesticides/reregistration/status.htm.*

In this final rule, EPA is revoking certain tolerances and/or tolerance exemptions because either they are no longer needed or are associated with food uses that are no longer registered under FIFRA in the United States. Those instances where registrations were canceled were because the registrant failed to pay the required maintenance fee and/or the registrant voluntarily requested cancellation of one or more registered uses of the pesticide active ingredient. The tolerances revoked by this final rule are no longer necessary to cover residues of the relevant pesticides in or on domestically treated commodities or commodities treated outside but imported into the United States. It is EPA's general practice to issue a final rule revoking those tolerances and tolerance exemptions for residues of pesticide active ingredients on crop uses for which there are no active registrations under FIFRA, unless any person in comments on the proposal indicates a need for the tolerance or tolerance exemption to cover residues in or on imported commodities or legally treated domestic commodities.

EPA has historically been concerned that retention of tolerances that are not necessary to cover residues in or on legally treated foods may encourage misuse of pesticides within the United States.

Generally, EPA will proceed with the revocation of these tolerances on the grounds discussed in Unit II.A., if one of the following conditions applies:

- Prior to EPA's issuance of a FFDCA section 408(f) order requesting additional data or issuance of a FFDCA section 408(d) or (e) order revoking the tolerances on other grounds, commenters retract the comment identifying a need for the tolerance to be retained.
- EPA independently verifies that the tolerance is no longer needed.
- The tolerance is not supported by data that demonstrate that the tolerance meets the requirements under FQPA.

In response to the proposals published in the **Federal Register** of February 6, 2008, and August 8, 2007, EPA received comments during the 60–day public comment period, as follows:

1. *Comment by Juan Antonio Castelo de la Rosa, Mexican grower, packers and exporters of tomatoes and other vegetables; Juan Antonio Lopez Barajas, Baja Produce, LLC; Ronald Bown F., Asociación de Exportadores de Chile A.G. (ASOEX); Hector CelisAguirre, Koor Intercomercial, SA; Celso G. Goseco, Ph.D.; Del Monte Fresh Produce Company: Dr. J. Angel Saavedra, Dow AgroSciences Mexico; Yasuyo Tadokoro, Lepon Holzworth & Kato PLLC. (EPA–HQ–OPP–2007–0445–0010–0012).* In summary, their comments object to either the revocation of the tomato tolerance and/or the reduction of the apple and grape tolerances associated with chlorpyrifos. They have expressed concern about the economic impacts on exports to the United States for growers, exporters, and others. Chlorpyrifos is considered a primary economical tool for managing pests associated with tomato, apple, and grape production.

*Agency response.* The EPA has proposed revoking the tolerance on tomatoes, and reducing the tolerances on apples and grapes based on use patterns resulting in lower residues due to the dietary risk posed to children. In June of 2000 a mitigation strategy was developed between the EPA and registrants of the technical and manufacturing use products at the time, who agreed to mitigate, and in some cases, eliminate uses resulting in reduced exposures and risks from chlorpyrifos. Based on use patterns before the June 2000 mitigation agreement, the acute dietary risk from residues of chlorpyrifos in/on food exceeded 100% for the most highly exposed subpopulation, children 1–6 years old, where greater than 100% constitutes dietary risk. The commodities that contributed the most to that risk estimate are apples (residues resulting from post-bloom uses), grapes (residues primarily on imported crops), and fresh tomatoes (residues primarily on imported crops). The mitigation measures in the June 2000 mitigation agreement addressed these dietary risks by

i. Canceling use on tomatoes and revoking the associated tolerance.

ii. Restricting use on apples to pre-bloom (dormant) applications and reducing the tolerance to 0.01 part per million (ppm) to reflect this new use pattern.

iii. Reducing the tolerance on grapes to 0.01 ppm to reflect the domestic dormant use pattern.

With these mitigation measures in place, the acute dietary risk from food is below 100% for all population subgroups, including the most sensitive population subgroup, children 1–6 years old meeting the safety standard in accordance with FFDCA. Therefore, the Agency is going forward with the revocation of the tolerance on tomatoes and the reduction of the tolerance levels for apples and grapes.

2. *Comment by Syngenta. (EPA–HQ–2007–0445–0013).* i. Revocation of tolerance in stone fruit - use of S-metolachlor in stone fruit is an important tool for Canadian fruit producers; and therefore, it would be beneficial to maintain United States tolerances to avoid any trade irritant issues for these crops being exported

from Canada to the United States. Canada currently has a tolerance of 0.1 ppm for S-metolachlor in apples, apricots, cherries, peaches/nectarines, pears and plums.

ii. Increase in tolerance for Crop Group 6A from 0.3 ppm to 0.5 ppm - Canada currently has a tolerance of 0.3 ppm for S-metolachlor in peas and snap beans. An increase in the United States tolerance could result in a trade irritant for these crops exported from the United States to Canada.

iii. Decrease in tolerance for Crop Group 6C from 0.3 ppm to 0.1 ppm - Canada currently has a tolerance of 0.3 ppm for S-metolachlor in dry beans. A decrease in the United States tolerance could result in a trade irritant for these crops exported from Canada to the United States.

iv. Increase in tolerance for egg and meat from 0.02 pm to 0.04 ppm - Canada currently has a tolerance of 0.02 ppm for S-metolachlor in eggs, meat of cattle, goats, hogs, poultry and sheep. An increase in the United States tolerance could result in a trade irritant for these animal products exported from the United States to Canada.

v. Increase tolerance in animal liver from 0.05 ppm to 0.1 ppm - Canada currently has a tolerance of 0.05 ppm for S-metolachlor in liver of cattle and poultry. An increase in the United States tolerance could result in a trade irritant for these animal products exported from the United States to Canada.

*Agency response*. The fruit, stone group 12 tolerance is being revoked in 40 CFR 180.368(a)(1) for metolachlor. There is currently no tolerance for S-metolachlor in/on fruit, stone group 12 to be retained. Although the Agency agrees with the harmonization of tolerances for both metolachlor and S-metolachlor to prevent trade irritant issues as discussed in Syngenta's comments 2-5, and it appears the residue data may support harmonization of these tolerances, any modification to these tolerances needs to be formally proposed, which the Agency intends to do in a future action.

3. *Comment by private citizen (EPA–HQ–OPP–2007–0445–0014)*. Tolerances should be established for residues of metolachlor on okra and dill as a consequence of the seed and pod vegetable crop group revisions.

*Agency Response*. The Agency agrees that okra and dill tolerances should be established. Tolerances were proposed for residues of metolachlor in/on okra and dill at 0.5 ppm in the **Federal Register** May 21, 2008 (73 FR 29456) (FRL–8362–1).

4. *Comment by private citizen (EPA–HQ–OPP–2007–0674–0016 and –0016.1)*. A private citizen requested that the Agency retain the fenamiphos tolerances on apple, cottonseed, and meat commodities citing information relative to risk as the basis for the comment.

*Agency response*. The commenter did address EPA's basis for revocation of the tolerances, i.e., the fact there are no longer active U.S. registrations, and therefore, no need for the tolerances. The expiration/revocation dates set for the tolerances are based on the cancellation of the last active product registration containing the active ingredient, fenamiphos. Therefore, the Agency is revoking the fenamiphos tolerances and is finalizing other tolerance actions including any revocations, modifications, establishments and nomenclature revisions in 40 CFR 180.349 as was proposed (including apple with a expiration/revocation date of December 31, 2009) on February 6, 2008 (73 FR 6867)(FRL–8345–2).

5. *Comment by Private Citizen (EPA–HQ–OPP–2007–0674–0018)*. A comment was received from a private citizen who agreed with the Agency's proposed revocation of tolerances for dimethoate residues of concern on apple; cabbage; collards; grape; lentil, seed; spinach; and revision of lettuce to leaf lettuce (due to cancellation of the last dimethoate registration for use on head lettuce); and establishment of a tolerance on wheat forage at 2.0 ppm.

*Agency response*. The Agency appreciates the comment of support to implement the proposed dimethoate tolerance actions. A response on dimethoate tolerance actions is provided in more detail in the Agency's response to another comment on dimethoate which follows.

6. *Comment by National Resources Defense Council (NRDC) OPP–2007–0674–0017 and –0017.1)*. A comment was received from the NRDC which states general agreement with a number of proposed tolerance revocations, but also notes a number of proposed increases to tolerances or establishment of tolerances (including ones on bensulide, desmedipham, fenamiphos, phorate, sethoxydim, and tetrachlorvinphos). In particular, NRDC expresses concerns previously made to EPA on 2,4-D (including aggregate and exposure risks, and FQPA safety factor; docket ID number EPA–HQ–OPP–2004–0167) and on dimethoate (including benchmark dose (BMD) analysis and the special FQPA 10X safety factor; docket ID number EPA–HQ–OPP–2005–0084) which it again references here.

*Agency response*. In documents dated December 16, 2004, January 7, 2005, and July 12, 2005, the Agency responded to comments, concerning the human health risk assessment, submitted during Phase 3 and Phase 5 of the public participation process for 2,4-D. These documents are available in docket number EPA–HQ–OPP–2004–0167 (entries –0090, –0221, and 0242) at *http://www.regulations.gov*. The Agency responded to NRDC's comments on 2,4-D in these documents and no new information is provided in their current comment, therefore the Agency re-iterates the previous responses given there. The Agency notes that the 2,4-D risk assessment states that the toxicological database is complete with the exception of a developmental neurotoxicity study, a repeat 2–generation reproduction study, and a 28–day inhalation toxicity study. The FQPA database uncertainty factor has been included in the 2,4-D risk assessment to address the uncertainties regarding developmental effects. The Agency issued a Data Call-In for 2,4-D in 2007 and expects to receive the inhalation toxicity data in early 2009 and developmental and reproduction toxicity data in early 2011 (see (page 1 of the Addendum to February 2, 2007 Memorandum: Response to Public Comments on the Dimethoate IRED in the revised IRED dated 8–2007 for details). Although additional data have been required to confirm the reregistration eligibility decision, the Agency bridged data and made conservative assumptions to conduct the risk assessment to make the reregistration eligibility decision until the confirmatory data are received. Should submitted data fail to confirm the reregistration eligibility decision, the decision will be amended as appropriate. However, the generic database supporting the reregistration of 2,4-D for eligible uses has been reviewed and determined to be substantially complete. In completing the risk assessment and reregistration eligibility decision for 2,4-D, the Agency has taken into account the complete toxicity profile for 2,4-D. Consequently, herein, the Agency is finalizing the tolerance actions on 2,4-D as described in the proposal of February 6, 2008 (73 FR 6867)(FRL–8345–2). The Agency has determined that these increased tolerances and new tolerances to be established are safe; i.e., there is a reasonable certainty that no harm will result from aggregate exposure to the pesticide chemical residue.

In a document dated January 31, 2006, the Agency responded to comments

submitted during Phase 5b of the public participation process for dimethoate. That document is available in docket number EPA–HQ–OPP–2005–0084 (entry –0036). The Agency responded to NRDC's comments on the Dimethoate Revised Risk Assessments and Risk Reduction Options on pages 20–26 of its response. Because no new information is provided in their current comment, the Agency reiterates the previous responses given there. As described, developmental and reproductive toxicity studies are available for dimethoate and omethoate. Prenatal developmental toxicity studies in rats and rabbits showed no indication of increased susceptibility of rat or rabbit fetuses to *in utero* exposure to dimethoate or omethoate. Similarly, there was no indication of increased susceptibility in the offspring as compared to parental animals in the reproduction studies. Acceptable developmental neurotoxicity and comparative cholinesterase (ChE) studies are available for dimethoate. BMD analysis of the ChE data from the comparative ChE study indicates that juvenile animals exhibit similar sensitivity to dimethoate from acute or multiple exposures. Furthermore, BMD analysis indicates that use of the BMD $L_{10}$ (the estimated dose at which 10% ChE is observed at the lower 95% confidence interval) for brain ChE is protective for potential pup mortality; therefore, a special hazard-based FQPA factor is not needed. However, an uncertainty factor of 100 was applied to the doses selected for risk assessment to account for both interspecies extrapolation and intraspecies variability. The BMD analysis of the pup mortality data from the dimethoate DNT study was performed using EPA's Benchmark Dose Software (BMDS). The BMDS, user's manual, and technical guidance can be obtained at *http://www.epa.gov/ncea/bmds.htm*. BMD analysis of brain ChE data was also performed by the Agency using the exponential dose-response model. The Agency's development of the exponential model and the Agency's use of the model for ChE inhibition have been well documented in previous SAP presentations since 2001, and are available on the EPA's SAP website at *http://www.epa.gov/scipoly/sap/index.htm*. Datasets upon which the dimethoate BMD values are based along with all model outputs were provided to the public at the time of the FIFRA SAP in 2004. These can be found in the appendices to the dimethoate issue paper on the EPA's SAP website at *http://www.epa.gov/scipoly/sap/2004/november/appendix9.pdf*. Consequently, the Agency is finalizing the tolerance actions on dimethoate as described in the proposal of February 6, 2008. The Agency has determined that these increased tolerances and new tolerances to be established are safe; i.e., there is a reasonable certainty that no harm will result from aggregate exposure to the pesticide chemical residue.

Regarding proposed tolerance increases and establishments for bensulide, desmedipham, fenamiphos, phorate, sethoxydim, and tetrachlorvinphos, while the commenter expressed a general concern, no chemical specific comments were made. The Agency is finalizing the tolerance actions on dimethoate as described in the proposal of February 6, 2008. The Agency has determined that these increased tolerances and new tolerances to be established are safe; i.e., there is a reasonable certainty that no harm will result from aggregate exposure to the pesticide chemical residue.

*Triallate*. Based on the available field trial data that indicate triallate residues of concern as high as 0.42 ppm, the Agency determined that a tolerance should be established in/on wheat forage at 0.5 ppm. This action was inadvertently omitted in the **Federal Register** proposal published September 27, 2006. In the **Federal Register** published August 8, 2007, the Agency proposed the tolerance for wheat, forage at 0.5 ppm. In the **Federal Register** published January 29, 2008 (73 FR 5104)(FRL–8348–8), the Agency finalized wheat, forage at 0.05 ppm rather than 0.5 ppm incorrectly. Therefore, EPA is establishing and correcting the tolerance in 40 CFR 180.314(c) for the combined triallate residues of concern in/on wheat, forage at 0.5 ppm.

*Sethoxydim*. In the **Federal Register** published February 6, 2008 (73 FR 6867)(FRL–8345–2), the EPA proposed revising commodity terminology in 40 CFR 180.412(a) for sethoxydim residues of concern in/on corn, fodder to corn, field, fodder at 2.5 ppm; corn, forage to corn, field, stover at 2.0 ppm in error. The corrected revision should read in 40 CFR 180.412(a) for sethoxydim residues of concern in/on corn, fodder to corn, field, stover at 2.5 ppm and corn, forage to corn, field, forage at 2.0 ppm.

*Metolachlor*. In the **Federal Register** published August 8, 2007, the Agency recommended the terminology in 40 CFR 180.368(a)(2) be revised from vegetable, fruiting, group 8, except tabasco pepper at 0.1 ppm to vegetable fruiting, group 8, except nonbell pepper at 0.1 ppm and in 40 CFR 180.368(c)(2) be revised from pepper, tabasco at 0.5 ppm to pepper, nonbell at 0.5 ppm. The residue data for the variety, tabasco pepper, require a tolerance of 0.5 ppm and the other nonbell peppers residue levels are lower such that a tolerance of 0.1 ppm is more appropriate. Therefore, the Agency has determined to retain the current terminology in 40 CFR 180.368(a)(2) (as proposed) and (c)(2) for vegetable, fruiting, except tabasco pepper, group 8 and pepper, tabasco, respectively.

*Bensulide*. The chemical name for the bensulide oxygen analog that currently contains a typographical error in 40 CFR 180.241 is being corrected to *S*-(*O,O*-diisopropyl phosphorothioate) ester of *N*-(2-mercaptoethyl) benzenesulfonamide.

*B. What is the Agency's Authority for Taking this Action?*

EPA may issue a regulation establishing, modifying, or revoking a tolerance under FFDCA section 408(e). In this final rule, EPA is establishing, modifying, and revoking tolerances to implement the tolerance recommendations made during the reregistration and tolerance reassessment processes, and as follow-up on canceled uses of pesticides. As part of these processes, EPA is required to determine whether each of the amended tolerances meets the safety standards under FFDCA. The safety finding determination is found in detail in each post-FQPA RED and TRED for the active ingredient. REDs and TREDs recommend the implementation of certain tolerance actions, including modifications to reflect current use patterns, to meet safety findings, and change commodity names and groupings in accordance with new EPA policy. Printed and electronic copies of the REDs and TREDs are available as provided in Unit II.A.

EPA has issued post-FQPA REDs for 2,4-D, bensulide, DCPA, desmedipham, dimethoate, fenamiphos, phorate, sethoxydim, terbufos, tetrachlorvinphos, and triallate, and TREDs for chlorpyrifos and metolachlor, whose REDs were completed prior to FQPA. Also, EPA issued a RED prior to FQPA for tetrachlorvinphos and made a safety finding which reassessed its tolerances according to FFDCA standard, maintaining them when new tolerances were established as noted in Unit II.A. REDs and TREDs contain the Agency's evaluation of the database for these pesticides, including statements regarding additional data on the active ingredients that may be needed to confirm the potential human health and environmental risk assessments

associated with current product uses, and REDs state conditions under which these uses and products will be eligible for reregistration. The REDs and TREDs recommended the establishment, modification, and/or revocation of specific tolerances. RED and TRED recommendations such as establishing or modifying tolerances, and in some cases revoking tolerances, are the result of assessment under the FFDCA standard of ''reasonable certainty of no harm.'' However, tolerance revocations recommended in REDs and TREDs that are made final in this document do not need such assessment when the tolerances are no longer necessary.

EPA's general practice is to revoke tolerances for residues of pesticide active ingredients on crops for which FIFRA registrations no longer exist and on which the pesticide may therefore no longer be used in the United States. EPA has historically been concerned that retention of tolerances that are not necessary to cover residues in or on legally treated foods may encourage misuse of pesticides within the United States. Nonetheless, EPA will establish and maintain tolerances even when corresponding domestic uses are canceled if the tolerances, which EPA refers to as ''import tolerances,'' are necessary to allow importation into the United States of food containing such pesticide residues. However, where there are no imported commodities that require these import tolerances, the Agency believes it is appropriate to revoke tolerances for unregistered pesticides in order to prevent potential misuse.

When EPA establishes tolerances for pesticide residues in or on raw agricultural commodities, the Agency gives consideration to possible pesticide residues in meat, milk, poultry, and/or eggs produced by animals that are fed agricultural products (for example, grain or hay) containing pesticides residues (40 CFR 180.6). If there is no reasonable expectation of finite pesticide residues in or on meat, milk, poultry, or eggs, then tolerances do not need to be established for these commodities (40 CFR 180.6(b) and 180.6(c)).

### *C. When Do These Actions Become Effective?*

These actions become effective on the date of publication of this final rule in the **Federal Register** with the exception of certain fenamiphos and tetrachlorvinphos tolerances. The tolerances revoked in the rule (with exception) are associated with uses that have been canceled for several years. The Agency believes that treated commodities have had sufficient time for passage through the channels of trade. EPA is revoking fenamiphos tolerances for 17 commodities as of December 31, 2009, and tetrachlorvinphos tolerances within 18 months from the date of final tolerance publication for cattle, hog, and poultry commodities. The Agency believes that these expiration/revocation dates allow users to exhaust any existing stocks and allows sufficient time for the passage of treated commodities through the channels of trade.

Any commodities listed in the regulatory text of this document that are treated with the pesticides subject to this final rule, and that are in the channels of trade following the tolerance revocations, shall be subject to FFDCA section 408(1)(5), as established by FQPA. Under this unit, any residues of these pesticides in or on such food shall not render the food adulterated so long as it is shown to the satisfaction of the Food and Drug Administration that:

1. The residue is present as the result of an application or use of the pesticide at a time and in a manner that was lawful under FIFRA.

2. The residue does not exceed the level that was authorized at the time of the application or use to be present on the food under a tolerance or exemption from tolerance. Evidence to show that food was lawfully treated may include records that verify the dates that the pesticide was applied to such food.

## III. Are There Any International Trade Issues Raised by this Final Action?

In making its tolerance decisions, EPA seeks to harmonize U.S. tolerances with international standards whenever possible, consistent with U.S. food safety standards and agricultural practices. EPA considers the international Maximum Residue Limits (MRLs) established by the Codex Alimentarius Commission, as required by section 408(b)(4) of FFDCA. The Codex Alimentarius is a joint United Nations Food and Agriculture Organization/World Health Organization food standards program, and it is recognized as an international food safety standards-setting organization in trade agreements to which the United States is a party. EPA may establish a tolerance that is different from a Codex MRL; however, FFDCA section 408(b)(4) requires that EPA explain the reasons for departing from the Codex level in a notice published for public comment. EPA's effort to harmonize with Codex MRLs is summarized in the tolerance reassessment section of individual REDs and TREDs, and in the Residue Chemistry document which supports the RED and TRED, as mentioned in the proposed rule cited in Unit II.A. Specific tolerance actions in this rule and how they compare to Codex MRLs (if any) is discussed in Unit II.A.

## IV. Statutory and Executive Order Reviews

In this final rule, EPA establishes tolerances under FFDCA section 408(e), and also modifies and revokes specific tolerances established under FFDCA section 408. The Office of Management and Budget (OMB) has exempted these types of actions (i.e., establishment and modification of a tolerance and tolerance revocation for which extraordinary circumstances do not exist) from review under Executive Order 12866, entitled *Regulatory Planning and Review* (58 FR 51735, October 4, 1993). Because this final rule has been exempted from review under Executive Order 12866 due to its lack of significance, this final rule is not subject to Executive Order 13211, entitled *Actions Concerning Regulations That Significantly Affect Energy Supply, Distribution, or Use* (66 FR 28355, May 22, 2001). This final rule does not contain any information collections subject to OMB approval under the Paperwork Reduction Act (PRA), 44 U.S.C. 3501 *et seq.*, or impose any enforceable duty or contain any unfunded mandate as described under Title II of the Unfunded Mandates Reform Act of 1995 (UMRA) (Public Law 104–4). Nor does it require any special considerations as required by Executive Order 12898, entitled *Federal Actions to Address Environmental Justice in Minority Populations and Low-Income Populations* (59 FR 7629, February 16, 1994); or OMB review or any other Agency action under Executive Order 13045, entitled *Protection of Children from Environmental Health Risks and Safety Risks* (62 FR 19885, April 23, 1997). This action does not involve any technical standards that would require Agency consideration of voluntary consensus standards pursuant to section 12(d) of the National Technology Transfer and Advancement Act of 1995 (NTTAA), Public Law 104–13, section 12(d) (15 U.S.C. 272 note). Pursuant to the Regulatory Flexibility Act (RFA) (5 U.S.C. 601 *et seq.*), the Agency previously assessed whether establishment of tolerances, exemptions from tolerances, raising of tolerance levels, expansion of exemptions, or revocations might significantly impact a substantial number of small entities and concluded that, as a general matter, these actions do not impose a significant economic impact on a substantial

number of small entities. These analyses for tolerance establishments and modifications, and for tolerance revocations were published on May 4, 1981 (46 FR 24950) and on December 17, 1997 (62 FR 66020) (FRL–5753–1), respectively, and were provided to the Chief Counsel for Advocacy of the Small Business Administration. Taking into account this analysis, and available information concerning the pesticides listed in this rule, the Agency hereby certifies that this final rule will not have a significant economic impact on a substantial number of small entities. Furthermore, for the pesticides named in this final rule, the Agency knows of no extraordinary circumstances that exist as to the present revocations that would change EPA's previous analysis. In addition, the Agency has determined that this action will not have a substantial direct effect on States, on the relationship between the national government and the States, or on the distribution of power and responsibilities among the various levels of government, as specified in Executive Order 13132, entitled *Federalism* (64 FR 43255, August 10, 1999). Executive Order 13132 requires EPA to develop an accountable process to ensure ''meaningful and timely input by State and local officials in the development of regulatory policies that have federalism implications.'' ''Policies that have federalism implications'' is defined in the Executive order to include regulations that have ''substantial direct effects on the States, on the relationship between the national government and the States, or on the distribution of power and responsibilities among the various levels of government.'' This final rule directly regulates growers, food processors, food handlers, and food retailers, not States. This action does not alter the relationships or distribution of power and responsibilities established by Congress in the preemption provisions of section 408(n)(4) of FFDCA. For these same reasons, the Agency has determined that this final rule does not have any ''tribal implications'' as described in Executive Order 13175, entitled *Consultation and Coordination with Indian Tribal Governments* (65 FR 67249, November 9, 2000). Executive Order 13175, requires EPA to develop an accountable process to ensure ''meaningful and timely input by tribal officials in the development of regulatory policies that have tribal implications.'' ''Policies that have tribal implications'' is defined in the Executive order to include regulations that have ''substantial direct effects on one or more Indian tribes, on the relationship between the Federal Government and the Indian tribes, or on the distribution of power and responsibilities between the Federal Government and Indian tribes.'' This final rule will not have substantial direct effects on tribal governments, on the relationship between the Federal Government and Indian tribes, or on the distribution of power and responsibilities between the Federal Government and Indian tribes, as specified in Executive Order 13175. Thus, Executive Order 13175 does not apply to this final rule.

## V. Congressional Review Act

The Congressional Review Act, 5 U.S.C. 801 *et seq.*, generally provides that before a rule may take effect, the agency promulgating the rule must submit a rule report to each House of the Congress and to the Comptroller General of the United States. EPA will submit a report containing this rule and other required information to the U.S. Senate, the U.S. House of Representatives, and the Comptroller General of the United States prior to publication of this final rule in the **Federal Register**. This final rule is not a ''major rule'' as defined by 5 U.S.C. 804(2).

## List of Subjects in 40 CFR Part 180

Environmental protection, Administrative practice and procedure, Agricultural commodities, Pesticides and pests, Reporting and recordkeeping requirements.

Dated: September 8, 2008.

**Marty Monell,**

*Acting Director, Office of Pesticide Programs.*

■ Therefore, 40 CFR chapter I is amended as follows:

## PART 180—[AMENDED]

■ 1. The authority citation for part 180 continues to read as follows:

**Authority:** 21 U.S.C. 321(q), 346a and 371.

■ 2. Section 180.142 is amended by revising the entries for ''Grape,'' ''Fruit, pome, group 11,'' ''Fruit, stone, group 12,'' and ''Strawberry'' in the table in paragraph (a) to read as follows:

**§ 180.142 2, 4-D; tolerances for residues.**

(a) * * *

| Commodity | Parts per million |
|---|---|
| * * * | * * |
| Grape | 0.05 |
| * * * | * * |
| Fruit, pome, group 11 | 0.05 |
| Fruit, stone, group 12 | 0.05 |
| * * * | * * |
| Strawberry | 0.05 |
| * * * | * * |

* * * * *

■ 3. Section 180.185 is amended by removing the entry for ''Vegetable, brassica, leafy, group 5'' from the table in paragraph (d) and adding it alphabetically to the table in paragraph (a) to read as follows.

**§ 180.185 DCPA; tolerances for residues.**

(a) * * *

| Commodity | Parts per million |
|---|---|
| * * * | * * |
| Vegetable, brassica, leafy, group 5 | 0.05 |
| * * * | * * |

* * * * *

■ 4. Section 180.204 is amended by revising the section heading, the table in paragraph (a), and paragraph (c) to read as follows:

**§ 180.204 Dimethoate; tolerances for residues.**

(a) * * *

| Commodity | Parts per million |
|---|---|
| Alfalfa, forage | 2.0 |
| Alfalfa, hay | 2.0 |
| Bean, dry, seed | 2.0 |
| Bean, lima | 2.0 |
| Bean, snap, succulent | 2.0 |
| Blueberry[1] | 1.0 |
| Broccoli | 2.0 |
| Cattle, meat byproducts | 0.02 |
| Cauliflower | 2.0 |
| Celery | 2.0 |
| Citrus, dried pulp | 5.0 |
| Corn, field, forage | 1.0 |
| Corn, field, grain | 0.1 |
| Corn, field, stover | 1.0 |
| Corn, pop, grain | 0.1 |
| Corn, pop, stover | 1.0 |
| Corn, sweet, forage | 1.0 |
| Cotton, undelinted seed | 0.1 |
| Egg | 0.02 |
| Endive | 2.0 |
| Goat, meat byproducts | 0.02 |
| Grapefruit | 2.0 |
| Hog, meat byproducts | 0.02 |
| Horse, meat byproducts | 0.02 |
| Kale | 2.0 |
| Lemon | 2.0 |
| Lettuce, leaf | 2.0 |
| Melon | 1.0 |
| Milk | 0.002 |
| Mustard greens | 2.0 |
| Orange | 2.0 |
| Pea | 2.0 |
| Pear | 2.0 |
| Pecan | 0.1 |
| Pepper | 2.0 |
| Potato | 0.2 |
| Poultry, meat byproducts | 0.02 |
| Safflower, seed | 0.1 |

| Commodity | Parts per million |
|---|---|
| Sheep, meat byproducts | 0.02 |
| Sorghum, grain, forage | 0.1 |
| Sorghum, grain, grain | 0.1 |
| Sorghum, grain, stover | 0.1 |
| Soybean, forage | 2.0 |
| Soybean, hay | 2.0 |
| Soybean, seed | 0.05 |
| Swiss chard | 2.0 |
| Tangerine | 2.0 |
| Tomato | 2.0 |
| Turnip, roots | 0.2 |
| Turnip, tops | 2.0 |
| Wheat, forage | 2.0 |
| Wheat, grain | 0.04 |
| Wheat, hay | 2.0 |
| Wheat, straw | 2.0 |

[1] There are U.S. registrations as of August 16, 1996.

* * * * *

(c) *Tolerances with regional registrations*. Tolerances with regional registration, as defined in §180.1(m), are established for total residues of dimethoate including its oxygen analog in or on the following food commodities:

| Commodity | Parts per million |
|---|---|
| Asparagus | 0.15 |
| Brussels sprouts | 5.0 |
| Cherry, sweet | 2.0 |
| Cherry, tart | 2.0 |

* * * * *

■ 5. Section 180.206 is amended by revising paragraph (a) to read as follows:

**§ 180.206 Phorate; tolerances for residues.**

(a) *General*. Tolerances are established for the combined residues of the insecticide phorate (*O,O*-diethyl *S* (ethylthio) methyl]phosphorodithioate), phorate sulfoxide, phorate sulfone, phorate oxygen analog, phorate oxygen analog sulfoxide, and phorate oxygen analog sulfone in or on the following food commodities:

| Commodity | Parts per million |
|---|---|
| Bean, dry, seed | 0.05 |
| Bean, succulent | 0.05 |
| Beet, sugar, roots | 0.3 |
| Beet, sugar, tops | 3.0 |
| Coffee, green bean[1] | 0.02 |
| Corn, field, forage | 0.5 |
| Corn, field, grain | 0.05 |
| Corn, sweet, forage | 0.5 |
| Corn, sweet, kernel plus cob with husks removed | 0.05 |
| Cotton, undelinted seed | 0.05 |
| Hop, dried cones | 2.0 |
| Peanut | 0.1 |
| Potato | 0.2 |
| Sorghum, grain, grain | 0.05 |
| Sorghum, grain, stover | 0.1 |
| Soybean, seed | 0.05 |
| Sugarcane, cane | 0.05 |
| Wheat, forage | 1.5 |
| Wheat, grain | 0.05 |
| Wheat, hay | 1.5 |
| Wheat, straw | 0.05 |

[1] There are no U.S. registrations as of September 1, 1993 for the use of phorate on the growing crop, coffee.

* * * * *

■ 6. Section 180.241 is amended by revising the section heading and paragraphs (a) and (c) to read as follows:

**§ 180.241 Bensulide; tolerances for residues.**

(a) *General*. Tolerances are established for the residues of S-(O,O-diisopropyl phosphorodithioate) of *N*-(2-mercaptoethyl) benzenesulfonamide including its oxygen analog *S*-(*O,O*-diisopropyl phosphorothioate) of *N*-(2-mercaptoethyl) benzenesulfonamide in or on the following food commodities:

| Commodity | Parts per million |
|---|---|
| Onion, bulb | 0.10 |
| Vegetable, brassica, leafy group 5 | 0.15 |
| Vegetable, cucurbits group 9 | 0.15 |
| Vegetable, fruiting group 8 | 0.10 |
| Vegetable, leafy except brassica group 4 | 0.15 |

* * * * *

(c) *Tolerances with regional registrations*. Tolerances with regional registration, as defined in § 180.1(m), are established for the residues of *S*-(*O,O*-diisopropyl phosphorodithioate) of *N*-(2-mercaptoethyl) benzenesulfonamide including its oxygen analog *S*-(*O,O*-diisopropyl phosphorothioate) of *N*-(2-mercaptoethyl) benzenesulfonamide in or on the following food commodities:

| Commodity | Parts per million |
|---|---|
| Carrot, roots | 0.10 |

* * * * *

■ 7. Section 180.252 is amended by revising paragraph (a) to read as follows:

**§ 180.252 Tetrachlorvinphos; tolerances for residues.**

(a) *General*. Tolerances are established for the combined residues of the insecticide tetrachlorvinphos, (*Z*)-2-chloro-1-(2,4,5- trichlorophenyl) vinyl dimethyl phosphate, and its metabolites, 1-(2,4,5-trichlorophenyl)-ethanol (free and conjugated forms), 2,4,5- trichloroacetophenone, and 1-(2,4,5-trichlorophenyl)-ethanediol in/on the following food commodities:

| Commodity | Parts per million | Expiration/Revocation Date |
|---|---|---|
| Cattle, fat (of which no more than 0.1 ppm is tetrachlorvinphos *per se*) | 0.2 | 3/17/10 |
| Cattle, kidney (of which no more than 0.05 ppm is tetrachlorvinphos *per se*) | 1.0 | 3/17/10 |
| Cattle, liver (of which no more than 0.05 ppm is tetrachlorvinphos *per se*) | 0.5 | 3/17/10 |
| Cattle, meat (of which no more than 2.0 ppm is tetrachlorvinphos *per se*) | 2.0 | 3/17/10 |
| Cattle, meat by products, except kidney and liver | 1.0 | 3/17/10 |
| Egg (of which no more than 0.05 ppm is tetrachlorvinphos *per se*) | 0.2 | 3/17/10 |
| Hog, fat (of which no more than 0.1 ppm is tetrachlorvinphos *per se*) | 0.2 | 3/17/10 |
| Hog, kidney (of which no more than 0.05 ppm is tetrachlorvinphos *per se*) | 1.0 | 3/17/10 |
| Hog, liver (of which no more than 0.05 ppm is tetrachlorvinphos *per se*) | 0.5 | 3/17/10 |
| Hog, meat (of which no more than 2.0 ppm is tetrachlorvinphos *per se*) | 2.0 | 3/17/10 |
| Hog, meat byproducts, except kidney and liver | 1.0 | 3/17/10 |
| Milk, fat (reflecting negligible residues in whole milk and of which no more than 0.05 ppm is tetrachlorvinphos *per se*) | 0.05 | 3/17/10 |
| Poultry, fat (of which no more than 7.0 ppm is tetrachlorvinphos *per se*) | 7.0 | 3/17/10 |
| Poultry, liver (of which no more than 0.05 ppm is tetrachlorvinphos *per se*) | 2.0 | 3/17/10 |
| Poultry, meat (of which no more than 3.0 ppm is tetrachlorvinphos *per se*) | 3.0 | 3/17/10 |
| Poultry, meat byproducts, except liver | 2.0 | 3/17/10 |

* * * * *

■ 8. Section 180.314 is amended by revising the entry for ''Wheat, forage'' in the table in paragraph (c) to read as follows:

**§ 180.314 Triallate; tolerance for residues.**

* * * * *

(c) * * *

| Commodity | Parts per million |
|---|---|
| * * * | * * |
| Wheat, forage | 0.5 |
| * * * | * * |

* * * * *

■ 9. Section 180.342 is amended by revising paragraph (a)(1); removing existing paragraph (a)(2); redesignating paragraph (a)(3) as paragraph (a)(2); redesignating paragraph (a)(4) as paragraph (a)(3); and by revising paragraph (c) to read as follows:

**§ 180.342 Chlorpyrifos; tolerances for residues.**

(a) *General.* (1) Tolerances are established for residues of the pesticide chlorpyrifos *per se* (*O,O*-diethyl- *O*-(3,5,6-trichloro-2-pyridyl) phosphorothioate) in or on the following food commodities:

| Commodity | Parts per million |
|---|---|
| Alfalfa, forage | 3.0 |
| Alfalfa, hay | 13 |
| Almond | 0.2 |
| Almond, hulls | 12 |
| Apple | 0.01 |
| Apple, wet pomace | 0.02 |
| Banana | 0.1 |
| Beet, sugar, dried pulp | 5.0 |
| Beet, sugar, molasses | 15 |
| Beet, sugar, roots | 1.0 |
| Beet, sugar, tops | 8.0 |
| Cattle, fat | 0.3 |
| Cattle, meat | 0.05 |
| Cattle, meat byproducts | 0.05 |
| Cherry, sweet | 1.0 |
| Cherry, tart | 1.0 |
| Citrus, dried pulp | 5.0 |
| Citrus, oil | 20 |
| Corn, field, forage | 8.0 |
| Corn, field, grain | 0.05 |
| Corn, field, refined oil | 0.25 |
| Corn, field, stover | 8.0 |
| Corn, sweet, forage | 8.0 |
| Corn, sweet, kernel plus cob with husk removed | 0.05 |
| Corn, sweet, stover | 8.0 |
| Cotton, undelinted seed | 0.2 |
| Cranberry | 1.0 |
| Cucumber | 0.05 |
| Egg | 0.01 |
| Fig | 0.01 |
| Fruit, citrus, group 10 | 1.0 |
| Goat, fat | 0.2 |
| Goat, meat | 0.05 |
| Goat, meat byproducts | 0.05 |
| Hazelnut | 0.2 |
| Hog, fat | 0.2 |
| Hog, meat | 0.05 |
| Hog, meat byproducts | 0.05 |
| Horse, fat | 0.25 |
| Horse, meat | 0.25 |
| Horse, meat byproducts | 0.25 |
| Kiwifruit | 2.0 |
| Lettuce | 1.0 |
| Milk, fat (Reflecting 0.01 ppm in whole milk) | 0.25 |
| Nectarine | 0.05 |
| Onion, bulb | 0.5 |
| Peach | 0.05 |
| Peanut | 0.2 |
| Peanut, refined oil | 0.2 |
| Pear | 0.05 |
| Pecan | 0.2 |
| Pepper | 1.0 |
| Peppermint, tops | 0.8 |
| Peppermint, oil | 8.0 |
| Plum, prune, fresh | 0.05 |
| Poultry, fat | 0.1 |
| Poultry, meat | 0.1 |
| Poultry, meat byproducts | 0.1 |
| Pumpkin | 0.05 |
| Radish | 2.0 |
| Rutabaga | 0.5 |
| Sheep, fat | 0.2 |
| Sheep, meat | 0.05 |
| Sheep, meat byproducts | 0.05 |
| Spearmint, tops | 0.8 |
| Spearmint, oil | 8.0 |
| Sorghum, grain, forage | 0.5 |
| Sorghum, grain, grain | 0.5 |
| Sorghum, grain, stover | 2.0 |
| Soybean, seed | 0.3 |
| Strawberry | 0.2 |
| Sunflower, seed | 0.1 |
| Sweet potato, roots | 0.05 |
| Turnip, roots | 1.0 |
| Turnip, tops | 0.3 |
| Vegetable, brassica, leafy, group 5 | 1.0 |
| Vegetable, legume, group 6. except soybean | 0.05 |
| Walnut | 0.2 |
| Wheat, forage | 3.0 |
| Wheat, grain | 0.5 |
| Wheat, straw | 6.0 |

* * * * *

(c) *Tolerances with regional registrations.* Tolerances with regional registration, as defined in 180.1(m), are established for residues of the pesticide chlorpyrifos *per se* (*O,O*-diethyl- *O*-(3,5,6-trichloro-2-pyridyl) phosphorothioate) in or on the following food commodities:

| Commodity | Parts per million |
|---|---|
| Asparagus | 5.0 |
| Grape | 0.01 |

* * * * *

■ 10. Section 180.349 is amended by revising paragraph (a) and the table in paragraph (c) to read as follows:

**§ 180.349 Fenamiphos; tolerances for residues.**

(a) *General.* Tolerances are established for the combined residues of the nematocide fenaminphos, (ethyl 3-methyl-4-(methylthio)phenyl (1-methylethyl)phosphoramidate, and its cholinesterase inhibiting metabolites ethyl 3-methyl-4-(methylsulfinyl)phenyl (1-methylethyl)phosphoramidate and ethyl 3-methyl-4-(methylsulfonyl)phenyl (1-methylethyl)phosporamidate in or on the following food commodities:

| Commodity | Parts per million | Expiration/Revocation Date |
|---|---|---|
| Apple | 0.25 | 12/31/09 |
| Banana[1] | 0.10 | None |
| Brussels sprouts | 0.05 | 12/31/09 |
| Cabbage | 0.10 | 12/31/09 |
| Cherry, sweet | 0.25 | 12/31/09 |
| Cherry, tart | 0.25 | 12/31/09 |
| Citrus, dried pulp | 2.5 | None |
| Citrus, oil | 25.0 | None |
| Eggplant | 0.05 | 12/31/09 |
| Fruit, citrus, group 10[1] | 0.50 | None |
| Garlic[1] | 0.50 | None |
| Grape[1] | 0.10 | None |
| Grape, raisin | 0.30 | None |
| Okra | 0.30 | 12/31/09 |
| Peach | 0.25 | 12/31/09 |
| Peanut | 1.0 | 12/31/09 |
| Pineapple[1] | 0.30 | None |
| Raspberry | 0.10 | 12/31/09 |
| Strawberry | 0.60 | 12/31/09 |

[1] There are no U.S. registrations as of December 31, 2009.

* * * * *

(c) * * *

| Commodity | Parts per million | Expiration/Revocation Date |
|---|---|---|
| Asparagus | 0.02 | 12/31/09 |
| Beet, garden roots | 1.5 | 12/31/09 |
| Beet, garden, tops | 1.0 | 12/31/09 |
| Cabbage, Chinese, bok choy | 0.50 | 12/31/09 |
| Kiwifruit | 0.10 | 12/31/09 |
| Pepper, nonbell | 0.60 | 12/31/09 |

* * * * *

■ 11. Section 180.352 is revised to read as follows:

**§ 180.352 Terbufos; tolerances for residues.**

(a) *General.* Tolerances are established for the combined residues of the insecticide terbufos (phosphorodithioic acid, *S*-(t-butylthio)methyl *O,O*-diethyl ester) and its phosphorylated (cholinesterase-inhibiting) metabolites (phosphorothioic acid, *S*-(t-butylthio)methyl *O,O*-diethyl ester; phosphorothioic acid, *S*-(t-butylsulfinyl)methyl *O,O*-diethyl ester; phosphorothioic acid, *S*-(t-butylsulfonyl)methyl *O,O*-diethyl ester; phosphorodithioic acid, *S*-(t-butylsulfinyl)methyl *O,O*-diethyl ester; and phosphorodithioic acid, *S*-(t-butylsulfonyl)methyl *O,O*-diethyl ester) in or on food commodities:

| Commodity | Parts per million |
|---|---|
| Banana | 0.025 |
| Beet, sugar, roots | 0.05 |
| Beet, sugar, tops | 0.1 |
| Coffee, green bean[1] | 0.05 |
| Corn, field, forage | 0.5 |
| Corn, field, grain | 0.5 |
| Corn, field, stover | 0.5 |
| Corn, pop, grain | 0.5 |
| Corn, pop, stover | 0.5 |
| Corn, sweet, kernel plus cob with husks removed | 0.05 |
| Corn, sweet, forage | 0.5 |
| Corn, sweet, stover | 0.5 |
| Sorghum, grain, forage | 0.5 |
| Sorghum, grain, grain | 0.05 |
| Sorghum, grain, stover | 0.5 |

[1] There are no U. S. registrations as of August 2, 1995, for the use of terbufos on the growing crop, coffee.

(b) *Section 18 emergency exemptions.* [Reserved]

(c) *Tolerances with regional registrations.* [Reserved]

(d) *Indirect or inadvertent residues.* [Reserved]

■ 12. Section 180.353 is amended by revising the entries for ''Beet, sugar, roots'' and ''Beet, sugar, tops'' in the table in paragraph (a), and removing and reserving paragraph (b) including the paragraph heading to read as follows:

**§ 180.353 Desmedipham; tolerances for residues.**

(a) * * *

| Commodity | Parts per million |
|---|---|
| * * * | * * |
| Beet, sugar, roots | 0.1 |
| Beet, sugar, tops | 5.0 |
| * * * | * * |

(b) *Section 18 emergency exemptions.* [Reserved]

* * * * *

13. Section 180.368 is revised to read as follows:

**§ 180.368 Metolachlor; tolerances for residues.**

(a) *General.* (1) Tolerances are established for the combined residues (free and bound) of the herbicide metolachlor, 2-chloro-*N*-(2- ethyl-6-methylphenyl)-*N*-(2-methoxy-1-methylethyl)acetamide, and its metabolites, determined as the derivatives, 2- [(2-ethyl-6-methylphenyl)amino]-1-propanol and 4-(2-ethyl-6-methylphenyl)-2- hydroxy-5-methyl-3-morpholinone, each expressed as the parent compound in the following raw agricultural commodities:

| Commodity | Parts per million |
|---|---|
| Almond, hulls | 0.30 |
| Animal feed, nongrass, group 18 | 1.0 |
| Cattle, fat | 0.04 |
| Cattle, kidney | 0.20 |
| Cattle, liver | 0.10 |
| Cattle, meat | 0.04 |
| Cattle, meat byproducts, except kidney and liver | 0.04 |
| Corn, field, forage | 6.0 |
| Corn, field, grain | 0.10 |
| Corn, field, stover | 6.0 |
| Corn, sweet, forage | 6.0 |
| Corn, sweet, kernel plus cob with husks removed | 0.10 |
| Corn, sweet, stover | 6.0 |
| Cotton, gin byproducts | 4.0 |
| Cotton, undelinted seed | 0.10 |
| Dill | 0.50 |
| Egg | 0.04 |
| Goat, fat | 0.04 |
| Goat, kidney | 0.20 |
| Goat, liver | 0.10 |
| Goat, meat | 0.04 |
| Goat, meat byproducts, except kidney and liver | 0.04 |
| Grass, forage | 10 |
| Grass, hay | 0.20 |
| Horse, fat | 0.04 |
| Horse, kidney | 0.20 |
| Horse, liver | 0.10 |
| Horse, meat | 0.04 |
| Horse, meat byproducts, except kidney and liver | 0.04 |
| Milk | 0.02 |
| Nut, tree, group 14 | 0.10 |
| Okra | 0.50 |
| Pea and bean, dried shelled, except soybean, subgroup 6C | 0.10 |
| Pea and bean, succulent shelled, subgroup 6B | 0.30 |
| Peanut | 0.20 |
| Peanut, hay | 20 |
| Peanut, meal | 0.40 |
| Potato | 0.20 |
| Poultry, fat | 0.04 |
| Poultry, meat | 0.04 |
| Poultry, meat byproducts | 0.04 |
| Safflower, seed | 0.10 |
| Sheep, fat | 0.04 |
| Sheep, kidney | 0.20 |
| Sheep, liver | 0.10 |
| Sheep, meat | 0.04 |
| Sheep, meat byproducts, except kidney and liver | 0.04 |
| Sorghum, grain, forage | 1.0 |
| Sorghum, grain, grain | 0.30 |
| Sorghum, grain, stover | 4.0 |
| Soybean, forage | 5.0 |
| Soybean, hay | 8.0 |
| Soybean, seed | 0.20 |
| Spinach | 0.50 |
| Tomato | 0.10 |
| Vegetable, foliage of legume, subgroup 7A, except soybean | 15.0 |
| Vegetable, legume, edible podded, subgroup 6A | 0.50 |

(2) Tolerances are established for the combined residues (free and bound) of the herbicide *S*-metolachlor *S*-2-chloro-*N*-(2-ethyl-6-methylphenyl)-*N*-(2-methoxy-1-methylethyl)acetamide, its R-enantiomer, and its metabolites, determined as the derivatives, 2-[2-ethyl-6-methylphenyl)amino]-1-propanol and 4-(2-ethyl-6-methylphenyl)-2-hydroxy-5-methyl-3-morpholinone, each expressed as the

parent compound, in or on the following raw agricultural commodities:

| Commodity | Parts per million |
|---|---|
| Asparagus | 0.10 |
| Beet, sugar, molasses | 2.0 |
| Beet, sugar, roots | 0.5 |
| Beet, sugar, tops | 15.0 |
| Brassica, head and stem, subgroup 5A | 0.60 |
| Cattle, fat | 0.04 |
| Cattle, kidney | 0.20 |
| Cattle, liver | 0.05 |
| Cattle, meat | 0.02 |
| Cattle, meat byproducts, except kidney and liver | 0.04 |
| Corn, field, grain | 0.10 |
| Corn, field, forage | 6.0 |
| Corn, field, stover | 6.0 |
| Corn, pop, grain | 0.10 |
| Corn, pop, stover | 6.0 |
| Corn, sweet, forage | 6.0 |
| Corn, sweet, kernel plus cob with husks removed | 0.10 |
| Corn, sweet, stover | 6.0 |
| Cotton, gin byproducts | 4.0 |
| Cotton, undelinted seed | 0.10 |
| Egg | 0.02 |
| Garlic, bulb | 0.10 |
| Goat, fat | 0.04 |
| Goat, kidney | 0.20 |
| Goat, liver | 0.05 |
| Goat, meat | 0.02 |
| Goat, meat byproducts, except kidney and liver | 0.04 |
| Grass, forage | 10.0 |
| Grass, hay | 0.20 |
| Horse, fat | 0.04 |
| Horse, kidney | 0.20 |
| Horse, liver | 0.05 |
| Horse, meat | 0.02 |
| Horse, meat byproducts, except kidney and liver | 0.04 |
| Milk | 0.02 |
| Onion, bulb | 0.10 |
| Onion, green | 2.0 |
| Peanut | 0.20 |
| Pea and bean, dried shelled, except soybean, subgroup 6C | 0.10 |
| Peanut, hay | 20.0 |
| Peanut, meal | 0.40 |
| Poultry, fat | 0.04 |
| Poultry, meat | 0.02 |
| Poultry, meat byproducts | 0.04 |
| Pumpkin | 0.10 |
| Safflower, seed | 0.10 |
| Shallot, bulb | 0.10 |
| Sheep, fat | 0.04 |
| Sheep, kidney | 0.20 |
| Sheep, liver | 0.05 |
| Sheep, meat | 0.02 |
| Sheep, meat byproducts, except kidney and liver | 0.04 |
| Sorghum, grain, forage | 1.0 |
| Sorghum, grain, grain | 0.3 |
| Sorghum, grain, stover | 4.0 |
| Soybean, forage | 5.0 |
| Soybean, hay | 8.0 |
| Soybean, seed | 0.20 |
| Spinach | 0.50 |
| Squash, winter | 0.10 |
| Sunflower, seed | 0.50 |
| Sunflower, meal | 1.0 |
| Tomato, paste | 0.30 |
| Vegetable, foliage of legume, except soybean, subgroup 7A | 15.0 |
| Vegetable, fruiting, except tabasco pepper, group 8 | 0.10 |
| Vegetable, leaf petioles, subgroup 4B | 0.10 |
| Vegetable, legume, edible podded, subgroup 6A | 0.50 |
| Vegetable, root, except sugar beet, subgroup 1B | 0.30 |
| Vegetable, tuberous and corm, subgroup 1C | 0.20 |

(b) *Section 18 emergency exemptions.* [Reserved]

(c) *Tolerances with regional registrations.* (1) Tolerances with regional registration as defined in 180.1(m) are established for the combined residues (free and bound) of the herbicide metolachlor [2-chloro-*N*-(2-ethyl-6-methylphenyl)-*N*-(2-methoxy-1-methylethyl)acetamide] and its metabolites, determined as the derivatives, 2-[2-ethyl-6-methylphenyl)amino]-1-propanol and 4-(2-ethyl-6-methylphenyl)-2-hydroxy-5-methyl-3-morpholinone, each expressed as the parent compound, in or on the following raw agricultural commodities:

| Commodity | Parts per million |
|---|---|
| Pepper, nonbell | 0.50 |

(2) Tolerances with regional registration as defined in 180.1(m) are established for the combined residues (free and bound) of the herbicide *S*-metolachlor, *S*-2-chloro-*N*-(2-ethyl-6-methylphenyl)-*N*-(2- methoxy-1-methylethyl)acetamide, its R-enantiomer, and its metabolites, determined as the derivatives, 2-[(2-ethyl-6-methylphenyl)amino]-1-propanol and 4-(2-ethyl-6-methylphenyl)-2-hydroxy-5-methyl-3-morpholinone, each expressed as the parent compound, in or on the following raw agricultural commodities:

| Commodity | Parts per million |
|---|---|
| Pepper, tabasco | 0.50 |

(d) *Indirect or inadvertent residues.* (1) Tolerances are established for the indirect or inadvertent combined residues (free and bound) of the herbicide metolachlor, 2-chloro-*N*-(2-ethyl-6- methylphenyl)-*N*-(2-methoxy-1-methylethyl)acetamide, and its metabolites, determined as the derivatives, 2-[(2-ethyl-6-methylphenyl)amino]-1-propanol and 4-(2-ethyl-6-methylphenyl)-2- hydroxy-5-methyl-3-morpholinone, each expressed as the parent compound in the following raw agricultural commodities:

| Commodity | Parts per million |
|---|---|
| Animal feed, nongrass, group 18 | 1.0 |
| Barley, grain | 0.10 |
| Barley, straw | 0.50 |
| Buckwheat, grain | 0.10 |
| Millet, forage | 0.50 |
| Millet, grain | 0.10 |
| Millet, straw | 0.50 |
| Oat, forage | 0.50 |
| Oat, grain | 0.10 |
| Oat, straw | 0.50 |
| Rice, grain | 0.10 |
| Rice, straw | 0.50 |
| Rye, forage | 0.50 |
| Rye, grain | 0.10 |
| Rye, straw | 0.50 |
| Wheat, forage | 0.50 |
| Wheat, grain | 0.10 |
| Wheat, straw | 0.50 |

(2) Tolerances are established for the indirect or inadvertent combined residues (free and bound) of the herbicide *S*-metolachlor, *S*-2- chloro-*N*-(2-ethyl-6-methylphenyl)-*N*-(2-methoxy-1-methylethyl)acetamide, its R-enantiomer, and its metabolites determined as the derivatives, 2-[(2-ethyl-6-methylphenyl)amino]-1-propanol and 4-(2-ethyl-6-methylphenyl)-2-hydroxy-5-methyl-3-morpholinone, each expressed as the parent compound in or on the following food commodities:

| Commodity | Parts per million |
|---|---|
| Animal feed, nongrass, group 18 | 1.0 |
| Barley, grain | 0.10 |
| Barley, hay | 1.0 |
| Barley, straw | 0.50 |
| Buckwheat, grain | 0.10 |
| Oat, forage | 0.50 |
| Oat, grain | 0.10 |
| Oat, hay | 1.0 |
| Oat, straw | 0.50 |
| Rice, grain | 0.10 |
| Rice, straw | 0.50 |
| Rye, forage | 0.50 |
| Rye, grain | 0.10 |
| Rye, straw | 0.50 |
| Wheat, forage | 0.50 |
| Wheat, grain | 0.10 |
| Wheat, hay | 1.0 |
| Wheat, straw | 0.50 |

■ 14. Section 180.412 is amended by revising in paragraph (c) the reference "§ 180.1(n)" to read "§ 180.1(m)", and in paragraph (a) by revising the table to read as follows:

**§ 180.412 Sethoxydim; tolerances for residues.**

(a) * * *

| Commodity | Parts per million |
|---|---|
| Alfalfa, forage | 40 |
| Alfalfa, hay | 40 |
| Almond, hulls | 2.0 |
| Apricot | 0.2 |
| Apple, wet pomace | 0.8 |
| Asparagus | 4.0 |
| Bean, succulent | 15 |
| Beet, sugar, molasses | 10 |
| Beet, sugar, tops | 3.0 |
| Blueberry | 4.0 |
| Borage, meal | 10 |
| Borage, seed | 6.0 |
| Buckwheat, flour | 25 |
| Buckwheat, grain | 19 |
| Caneberry subgroup 13 A | 5.0 |
| Canola, meal | 40 |
| Canola, seed | 35 |
| Cattle, fat | 0.2 |
| Cattle, meat | 0.2 |
| Cattle, meat byproducts | 1.0 |
| Cherry, sweet | 0.2 |
| Cherry, tart | 0.2 |
| Citrus, dried pulp | 1.5 |
| Clover, forage | 35 |
| Clover, hay | 55 |
| Coriander, leaves | 4.0 |
| Corn, field, forage | 2.0 |
| Corn, field, grain | 0.5 |
| Corn, field, stover | 2.5 |
| Corn, sweet, forage | 3.0 |
| Corn, sweet, kernel plus cob with husk removed | 0.4 |
| Corn, sweet, stover | 3.5 |
| Cotton, undelinted seed | 5.0 |
| Cowpea, forage | 15 |
| Cowpea, hay | 50 |
| Cranberry | 2.5 |
| Dillweed, fresh leaves | 10 |
| Egg | 2.0 |
| Flax, seed | 5.0 |
| Fruit, citrus, group 10 | 0.5 |
| Fruit, pome, group 11 | 0.2 |
| Goat, fat | 0.2 |
| Goat, meat | 0.2 |
| Goat, meat byproducts | 1.0 |
| Grape | 1.0 |
| Grape, raisin | 2.0 |
| Hog, fat | 0.2 |
| Hog, meat | 0.2 |
| Hog, meat byproducts | 1.0 |
| Horse, fat | 0.2 |
| Horse, meat | 0.2 |
| Horse, meat byproducts | 1.0 |
| Juneberry | 5.0 |
| Lingonberry | 5.0 |
| Milk | 0.5 |
| Nectarine | 0.2 |
| Nut, tree, group 14 | 0.2 |
| Okra | 2.5 |
| Pea and bean, dried shelled, except soybean, subgroup 6C | 25 |
| Pea, field, hay | 40 |
| Pea, field, vines | 20 |
| Pea, succulent | 10 |
| Peach | 0.2 |
| Peanut | 25 |
| Peppermint, tops | 30 |
| Pistachio | 0.2 |
| Potato granules/flakes | 8.0 |
| Potato waste, processed | 8.0 |
| Poultry, fat | 0.2 |
| Poultry, meat | 0.2 |
| Poultry, meat byproducts | 2.0 |
| Radish, tops | 4.5 |
| Rapeseed, meal | 40 |
| Rapeseed, seed | 35 |
| Safflower, seed | 15 |
| Salal | 5.0 |
| Sheep, fat | 0.2 |
| Sheep, meat | 0.2 |
| Sheep, meat byproducts | 1.0 |
| Soybean, hay | 10 |
| Soybean, seed | 16 |
| Spearmint, tops | 30 |
| Strawberry | 10 |
| Sunflower, meal | 20 |
| Sunflower, seed | 7.0 |
| Turnip, tops | 5.0 |
| Vegetable, brassica, leafy, group 5 | 5.0 |
| Vegetable, bulb, group 3 | 1.0 |
| Vegetable, cucurbit, group 9 | 4.0 |
| Vegetable, fruiting, group 8 | 4.0 |
| Vegetable, leafy, except brassica, group 4 | 4.0 |
| Vegetable, root and tuber, group 1 | 4.0 |

* * * * *

[FR Doc. E8–21736 Filed 9–16–08; 8:45 am]

BILLING CODE 6560–50–S

## ENVIRONMENTAL PROTECTION AGENCY

## 40 CFR Part 282

**[EPA–R09–UST–2007–1122; FRL–8716–3]**

## Underground Storage Tank Program: Approved State Program for Hawaii

**AGENCY:** Environmental Protection Agency (EPA).

**ACTION:** Immediate final rule.

**SUMMARY:** The Resource Conservation and Recovery Act of 1976, as amended (RCRA), authorizes EPA to grant approval to States to operate their underground storage tank programs in lieu of the Federal program. This action codifies EPA's decision to approve State programs and incorporates by reference those provisions of the State statutes and regulations that will be subject to EPA's inspection and enforcement authorities in accordance with sections 9005 and 9006 of RCRA Subtitle I and other applicable statutory and regulatory provisions. This rule codifies the prior approval of the State of Hawaii's underground storage tank program and incorporates by reference appropriate provisions of State statutes and regulations.

**DATES:** This final rule is effective November 17, 2008, unless EPA publishes a prior **Federal Register** notice withdrawing this immediate final rule. All comments on the codification of Hawaii's underground storage tank program must be received by the close of business October 17, 2008. The incorporation by reference of certain publications listed in the regulations is approved by the Director of the **Federal Register**, as of November 17, 2008, in accordance with 5 U.S.C. 552(a).

**ADDRESSES:** Submit your comments, identified by Docket ID No. EPA–R09–UST–2007–112, by one of the following methods:

- *http://www.regulations.gov:* Follow the on-line instructions for submitting comments.
- *E-mail: amaro.laurie@epa.gov.*
- *Fax:* (415) 947–3530.
- *Mail:* Laurie Amaro, U.S. EPA Region 9, 75 Hawthorne Street, (Mail Code: WST–8), San Francisco, CA 94105.
- *Hand Delivery:* Laurie Amaro, Waste Management Division, U.S. EPA Region 9, 75 Hawthorne Street, San Francisco, CA 94105. Such deliveries are only accepted during EPA's normal hours of operation and should be made to the EPA receptionist office on the first floor.

*Instructions:* Direct your comments to Docket ID No. EPA–R09–UST–2007–112. EPA's policy is that all comments received will be included in the public docket without change and may be made available online at *http://www.regulations.gov* including any personal information provided, unless the comment includes information claimed to be Confidential Business Information (CBI) or other information whose disclosure is restricted by statue. Do not submit information that you consider to be CBI or otherwise protected through *http://www.regulations.gov* or e-mail. The *http://www.regulations.gov* Web site is an ''anonymous access'' system, which means WPA will not know your identity or contact information unless you provide it in the body of your comment. If you send an e-mail comment directly to EPA without going through *http://www.regulations.gov* your e-mail address will be automatically captured and included as part of the comment that is placed in the public docket and made available on the Internet. If you submit an electronic comment, EPA recommends that you include your name and other contact information in the body of your comment and with any disk or CD–ROM you submit. If EPA cannot read your comment due to

technical difficulties and cannot contact you for clarification, EPA may not be able to consider your comment. Electronic files should avoid the use of special characters, any form of encryption, and be free of any defects or viruses.

*Docket:* All documents in the docket are listed in the *http://www.regulations.gov* index. Although listed in the index, some information is not publicly available, e.g., CBI or other information whose disclosure is restricted by statute. Certain other materials, such as copyrighted material, will be publicly available only in hard copy. Publicly available docket materials are available either electronically through *http://www.regulations.gov* or in hard copy at the EPA Region 9 Environmental Information Center Library, 13th Floor, 75 Hawthorne Street, San Francisco, CA 94706; Business hours: 9 a.m. to noon and 1 p.m. to 4 p.m., Monday–Thursday. *Phone Number:* (415) 947–4406; *e-mail address: library-region9@epa.gov.*

You may also view and copy Hawaii's underground storage tank statute and regulations at: Hawaii Department of Health, Solid and Hazardous Waste Branch, 919 Ala Moana Blvd., Room 212, Honolulu, Hawaii 96814–4920. Call (808) 586–4226 in advance to make an appointment.

**FOR FURTHER INFORMATION CONTACT:** Laurie Amaro, U.S. EPA Region 9, 75 Hawthorne Street, (Mail Code: WST–8), San Francisco, CA 94105. *Phone Number:* (415) 972–3364; *e-mail address: amaro.laurie@epa.gov.*

**SUPPLEMENTARY INFORMATION:**

## Background

Section 9004 of RCRA, 42 U.S.C. 6991c, allows the EPA to approve a State underground storage tank program to operate in the State in lieu of the Federal underground storage tank program. EPA published a rule in the **Federal Register** granting approval to Hawaii on September 25, 2002, and approval was effective on September 30, 2002 (67 FR 60161).

EPA codifies its approval of a State program in 40 CFR part 282 and incorporates by reference therein the State's statutes and regulations that make up the approved program which is federally-enforceable in accordance with sections 9005 and 9006 of Subtitle I of RCRA, 42 U.S.C. 6991d and 6991e, and other applicable statutory and regulatory provisions. Today's rulemaking codifies EPA's approval of Hawaii's underground storage tank program. This codification reflects the State program in effect at the time EPA granted Hawaii's approval, in accordance with section 9004(a), 42 U.S.C. 6991c(a), for its underground storage tank program. Notice and opportunity for comment were provided earlier on the Agency's decision to approve the Hawaii program, and EPA is not now reopening that decision nor requesting comment on it.

To codify EPA's approval of Hawaii's underground storage tank program, EPA has added section 282.61 to title 40 of the CFR. 40 CFR 282.61(d)(1)(i) incorporates by reference the State's statutes and regulations that make up the approved program which is federally-enforceable. 40 CFR 282.61 also references the Attorney General's Statement, the Demonstration of Adequate Enforcement Procedures, the Program Description, and the memorandum of Agreement, which were evaluated as part of the approval process of the underground storage tank program, in accordance with Subtitle I of RCRA.

EPA retains the authority in accordance with sections 9005 and 9006 of Subtitle I of RCRA, 42 U.S.C. 6991d and 6991e, and other applicable statutory and regulatory provisions, to undertake inspections and enforcement actions in approved States. With respect to such an enforcement action, EPA will rely on Federal sanctions, Federal inspection authorities, and Federal procedures rather than the State analogues of these provisions. Therefore, Hawaii's inspection and enforcement authorities are not incorporated by reference, nor are they part of Hawaii's approved state program which operates in lieu of the Federal program. These authorities, however, are listed in 40 CFR 282.61(d)(1)(ii) for informational purposes, and also because EPA considered them in determining the adequacy of Hawaii's enforcement authority. Hawaii's authority to inspect and enforce the State's underground storage tank requirements continues to operate independently under State law.

Some provisions of the State's underground storage tank program are not part of the federally-approved State program. These non-approved provisions are not part of the RCRA Subtitle I program because they are ''broader in scope'' than Subtitle I of RCRA. See 40 CFR 281.12(a)(3)(ii). As a result, State provisions which are ''broader in scope'' than the Federal program are not incorporated by reference for purposes of Federal enforcement in 40 CFR part 282. Section 282.61(d)(1)(iii) of the codification simply lists for reference and clarity the Hawaii statutory and regulatory provisions which are ''broader in scope'' than the Federal program and which are not, therefore, part of the approved program being codified today. ''Broader in scope'' provisions cannot be enforced by EPA; the State, however, will continue to enforce such provisions.

When the phrases, ''insofar'' and ''except insofar,'' are used in Appendix A (which provides an informational listing of the state requirements incorporated by reference in Part 282 of the Code of Federal Regulations), refer to the binders in the codification materials for specifics as to any words, phrases, sentences, paragraphs, or subsections that are ''crossed-out'' in the binders. These crossed-out materials are not incorporated by reference in Part 282 of the Code of Federal Regulations.

## Statutory and Executive Order Reviews

This action only codifies EPA-authorized underground storage tank program requirements pursuant to RCRA section 9004 and imposes no requirements other than those imposed by State law (*see* **SUPPLEMENTARY INFORMATION**). Therefore, this rule complies with applicable executive orders and statutory provisions as follows.

1. Executive Order 12866: Regulatory Planning Review—The Office of Management and Budget has exempted this rule from its review under Executive Order (EO) 12866. 2. Paperwork Reduction Act—This rule does not impose an information collection burden under the Paperwork Reduction Act. 3. Regulatory Flexibility Act—After considering the economic impacts of today's rule on small entities under the Regulatory Flexibility Act, I certify that this rule will not have a significant economic impact on a substantial number of small entities. 4. Unfunded Mandates Reform Act—Because this rule codifies pre-existing requirements under state law and does not impose any additional enforceable duty beyond that required by state law, it does not contain any unfunded mandate or significantly or uniquely affect small governments, as described in the Unfunded Mandates Reform Act. 5. Executive Order 13132: Federalism—EO 13132 does not apply to this rule because it will not have federalism implications (i.e., substantial direct effects on the States, on the relationship between the national government and the States, or on the distribution of power and responsibilities among the various levels of government). 6. Executive Order 13175: Consultation and Coordination with Indian Tribal Governments—EO 13175 does not apply

to this rule because it will not have tribal implications (i.e., substantial direct effects on one or more Indian tribes, on the relationship between the Federal Government and Indian tribes, or on the distribution of power and responsibilities between the Federal Government and Indian tribes). 7. Executive Order 13045: Protection of Children from Environmental Health & Safety Risks—This rule is not subject to EO 13045 because it is not economically significant and it is not based on health or safety risks. 8. Executive Order 13211: Actions that Significantly Affect Energy Supply, Distribution, or Use—This rule is not subject to EO 13211 because it is not a significant regulatory action as defined in EO 12866. 9. National Technology Transfer and Advancement Act—EPA has previously addressed the non-applicability of the National Technology Transfer and Advancement Act in its final approval of this state program. See 67 FR 60161 for final approval of state program. Section 12(d) of the National Technology Transfer and Advancement Act does not apply to this action. 10. Congressional Review Act—EPA will submit a report containing this rule and other information required by the Congressional Review Act (5 U.S.C. 801 et seq.) to the U.S. Senate, the U.S. House of Representatives, and the Comptroller General of the United States prior to publication in the **Federal Register**. A major rule cannot take effect until 60 days after it is published in the **Federal Register**. This action is not a ''major rule'' as defined by 5 U.S.C. 804(2). Nevertheless, to allow time for public comment, this action will be effective on November 17, 2008.

**List of Subjects in 40 CFR Part 282**

Environmental protection, Hazardous substances, Incorporation by reference, Intergovernmental relations, State program approval, Underground storage tanks, Water pollution control.

Dated: September 5, 2008.

**Jane Diamond,**

*Acting Regional Administrator, EPA Region 9.*

■ For the reasons set forth in the preamble, 40 CFR part 282 is amended as follows:

## PART 282—APPROVED UNDERGROUND STORAGE TANK PROGRAMS

■ 1. The authority citation for part 282 continues to read as follows:

**Authority:** 42 U.S.C. 6912, 6991c, 6991d, and 6991e.

## Subpart B—Approved State Programs

■ 2. Subpart B is amended by adding § 282.61 to read as follows:

### § 282.61 Hawaii State-Administered Program.

(a) The State of Hawaii's underground storage tank program is approved in lieu of the Federal program in accordance with Subtitle I of the Resource Conservation and Recovery Act of 1976 (RCRA), as amended, 42 U.S.C. 6991 *et seq.* The State's program, as administered by the Hawaii Department of Health, was approved by EPA pursuant to 42 U.S.C. 6991c and part 281 of this chapter. EPA approved the Hawaii underground storage tank program on September 25, 2002, and approval was effective on September 30, 2002.

(b) Hawaii has primary responsibility for enforcing its underground storage tank program. However, EPA retains the authority to exercise its inspection and enforcement authorities in accordance with sections 9005 and 9006 of Subtitle I of RCRA, 42 U.S.C. 6991d and 6991e, regardless of whether the State has taken its own actions, as well as in accordance with other statutory and regulatory provisions.

(c) To retain program approval, Hawaii must revise its approved program to adopt new changes to the Federal Subtitle I program that make it more stringent, in accordance with section 9004 of RCRA, 42 U.S.C. 6991c, and 40 CFR part 281, subpart E. If Hawaii obtains approval for the revised requirements pursuant to section 9004 of RCRA, 42 U.S.C. 6991c, the newly approved statutory and regulatory provisions will be added to this subpart and notice of any change will be published in the **Federal Register**.

(d) Hawaii has final approval for the following elements submitted to EPA in the State's program application for final approval. On September 25, 2002, EPA published a rule approving the State's program in the **Federal Register**, 67 FR 60161. That approval became effective on September 30, 2002. Copies of Hawaii's program application may be obtained from the Hawaii Department of Health, Solid and Hazardous Waste Branch, 919 Ala Moana Boulevard, Suite 212, Honolulu, HI 96814.

(1) *State statutes and regulations.* (i) The provisions cited in paragraph (d)(1)(i) of this section are incorporated by reference as part of the approved underground storage tank program in accordance with Subtitle I of RCRA, 42 U.S.C. 6991 *et seq.*

(A) Hawaii Statutory Requirements Applicable to the Underground Storage Tank Program, 2001.

(B) Hawaii Regulatory Requirements Applicable to the Underground Storage Tank Program, 2001.

(ii) EPA considered the following statutes and regulations in evaluating the State program, but did not incorporate them by reference.

(A) The statutory provisions include of the Hawaii Revised Statutes:

(*1*) Hawaii Revised Statutes, Chapter 342L, Underground Storage Tanks.
- Section 342L–1 Definitions (insofar as ''complaint'' sets forth enforcement authorities)
- Section 342L–2 Administration
- Section 342L–3 Powers; rulemaking; appointment of hearings officers
- Section 342L–7 Authority to obtain information and data, inspect, and require and conduct activities; penalties for disclosure
- Section 342L–8 Enforcement
- Section 342L–9 Emergency powers; procedures
- Section 342L–10 Penalties
- Section 342L–11 Administrative penalties
- Section 342L–12 Injunctive relief
- Section 342L–12.5 Intervention
- Section 342L–13 Appeal
- Section 342L–15 Public records; confidential information
- Section 342L–17 Other action not barred
- Section 342L–18 Enforcement by state and county authorities
- Section 342L–19 Other powers of department not affected
- Section 342L–20 Effect of laws, ordinances, and rules
- Section 342L–21 Priority in courts
- Section 342L–30 Notification requirements (insofar as paragraph (i) of this section grants the Department authority to assess penalties for noncompliance)
- Section 342L–51 Leaking underground storage tank fund
- Section 342L–52 Response to suspected or confirmed releases (insofar as it sets forth enforcement authorities)
- Section 342L–53 Cost recovery

(*2*) Hawaii Revised Statutes, Chapter 342D, Water Pollution.
- Section 342D–8 Inspection of premises
- Section 342D–9 Enforcement
- Section 342D–10 Emergency powers; procedures
- Section 342D–11 Injunctive relief
- Section 342D–12 Appeal
- Section 342D–14 Public records; confidential information; penalties
- Section 342D–30 Civil penalties
- Section 342D–31 Administrative penalties
- Section 342D–32 Negligent violations
- Section 342D–33 Knowing violations
- Section 342D–34 Knowing endangerment
- Section 342D–35 False statements
- Section 342D–36 Treatment of single operational upset
- Section 342D–37 Responsible corporate officer as ''person''

Section 342D–39 Disposition of collected fines and penalties
Section 342D–52 Testing of water and aquatic and other life
(*3*) Hawaii Revised Statutes, Chapter 128D, Environmental Response Law.
Section 128D–4 State response authorities; uses of fund (insofar as it sets forth enforcement authorities for certain corrective actions)

(B) The regulatory provisions include; Hawaii Administrative Rules, Chapter 11–281, Underground Storage Tanks:

Section 11–281–03 Definitions (insofar as ''complaint'' sets forth enforcement authorities; and insofar as ''field citation'' and ''force majeure'' relate to the Department's enforcement authorities)
Section 11–281–80 Public participation for corrective action plans (insofar as paragraph (j) of this section sets forth enforcement authorities)
Section 11–281–121 Purpose
Section 11–281–122 Applicability
Section 11–281–123 Issuance and contents of a field citation
Section 11–281–124 Notice of citation
Section 11–281–125 Field citation order and settlement agreement
Section 11–281–126 Correcting violations; paying the settlement amount; and signing the settlement agreement
Section 11–281–127 Method of payment
Section 11–281–128 Field citation penalty amounts for settlement
Section 11–281–131 Appendices VII and VIII (insofar as they relate to the Department's field citation program)

(iii) The following statutory and regulatory provisions are broader in scope than the Federal program, are not part of the approved program, and are not incorporated by reference. These provisions are not federally enforceable.

(A) The statutory provisions include; Hawaii Revised Statutes, Chapter 342L, Underground Storage Tanks:

Section 342L–1 Definitions (''owner'' insofar as it includes persons who hold indicia of ownership to protect an interest in a tank system; ''permit'' insofar as it sets forth a permitting program; and ''regulated substance'' insofar as it includes other substances as designated by the Department)
Section 342L–4 Permits; procedures for (insofar as it establishes a permitting program)
Section 342L–5 Variances allowed (insofar as variances exceed the scope of the federal program)
Section 342L–6 Variances; procedures for (insofar as variances exceed the scope of the federal program)
Section 342L–14 Fees (insofar as it grants the director authority to establish fees for registering underground storage tanks)
Section 342L–16 Non-liability of department personnel (insofar as it was specifically not authorized in the **Federal Register** notice of program approval)
Section 342L–23 Directory of underground storage tank service providers (insofar as it was specifically not authorized in the **Federal Register** notice of program approval)
Section 342L–31 Permit requirements and transfer of permit (insofar as it requires owners and operators to obtain permits to install or operate UST systems)
Section 342L–50 Definitions (insofar as the definition of ''owner'' defines lenders as operators and subjects such lenders to requirements other than the corrective action requirements)

(B) The regulatory provisions include the following sections of Hawaii Administrative Rules, Chapter 11–281, Underground Storage Tanks:

Section 11–281–03 Definitions (''farm tank'' insofar as it regulates tanks on farms that are not used for farm or commercial purposes; ''regulated substance'' insofar as the Department can designate other substances; ''reportable quantity'' insofar as it sets forth a reporting threshold of 10 lbs. for trichloropropane; and ''underground storage tank'' insofar as its designation of farm tanks exceeds the scope of the federal regulations)
Section 11–281–23 Permit required (insofar as it relates to the permitting program)
Section 11–281–24 Application for a permit (insofar as paragraphs (a), (b), (c)(3), and (c)(4) of this section relate to the permitting program)
Section 11–281–25 Permit (insofar as paragraphs (a) and (b) of this section relate to the permitting program)
Section 11–281–26 Permit renewals (insofar as it relates to the permitting program)
Section 11–281–27 Action on and timely approval of an application for a permit (insofar as it relates to the permitting program)
Section 11–281–28 Permit conditions (insofar as it relates to the permitting program)
Section 11–281–29 Modification of permit and notice of change (insofar as it relates to the permitting program)
Section 11–281–30 Revocation or suspension of permit (insofar as it relates to the permitting program)
Section 11–281–31 Change in owner or operator for a permit (insofar as it relates to the permitting program)
Section 11–281–32 Variances allowed (insofar as variances exceed the scope of the federal program)
Section 11–281–33 Variance applications (insofar as variances exceed the scope of the federal program)
Section 11–281–34 Maintenance of permit or variance (insofar as it relates to the permitting program)
Section 11–281–35 Fees (insofar as it establishes registration fees)
Section 11–281–45 Reporting and recordkeeping (insofar as paragraph (b)(3)of this section addresses posting of signs; and paragraph (c)(6) of this section requires maintenance of permit records)
Section 11–281–73 Posting of signs (insofar as there is no analogous provision in the federal regulations)
Section 11–281–131 Appendices II, IV, V, and VI of this section (insofar as they address permit application and transfer procedures and variances)

(2) *Statement of legal authority.* (i) ''Attorney General's Statement,'' signed by the State Attorney General on October 12, 2000, though not incorporated by reference, is referenced as part of the approved underground storage tank program in accordance with Subtitle I of RCRA, 42 U.S.C. 6991 *et seq.*

(ii) Letter from the Attorney General of Hawaii to EPA, October 12, 2000, though not incorporated by reference, is referenced as part of the approved underground storage tank program in accordance with Subtitle I of RCRA, 42 U.S.C. 6991 *et seq.*

(3) *Demonstration of procedures for adequate enforcement.* The ''Demonstration of Procedures for Adequate Enforcement'' submitted as part of the original application on May 23, 2001, though not incorporated by reference, is referenced as part of the approved underground storage tank program in accordance with Subtitle I of RCRA, 42 U.S.C. 6991 *et seq.*

(4) *Program Description.* The program description and any other material submitted as part of the original application on May 23, 2001, though not incorporated by reference, are referenced as part of the approved underground storage tank program in accordance with Subtitle I of RCRA, 42 U.S.C. 6991 *et seq.*

(5) *Memorandum of Agreement.* The Memorandum of Agreement between EPA Region 9 and the Hawaii Department of Health, signed by the EPA Regional Administrator on September 13, 2002, though not incorporated by reference, is referenced as part of the approved underground storage tank program in accordance with Subtitle I of RCRA, 42 U.S.C. 6991 *et seq.*

■ 3. Appendix A to Part 282 is amended by adding in alphabetical order ''Hawaii'' and its listing to read as follows:

## Appendix A to Part 282—State Requirements Incorporated by Reference in Part 282 of the Code of Federal Regulations

* * * * *

### Hawaii

(a) The statutory provisions include:

(1) Hawaii Revised Statutes, Chapter 342L, Underground Storage Tanks.
Section 342L–1 Definitions (except ''complaint'' insofar as it sets forth

enforcement authorities; ''owner'' insofar as it includes persons who hold indicia of ownership to protect an interest in a tank system; ''permit'' insofar as it sets forth a permitting program; and ''regulated substance'' insofar as it includes other substances as designated by the Department)
Section 342L–7.5 Record maintenance
Section 342L–30 Notification requirements (except paragraph (i) of this section insofar as it grants the Department authority to assess penalties for noncompliance)
Section 342L–32 Standards for tanks and tank systems
Section 342L–33 Release detection
Section 342L–34 Reporting of releases
Section 342L–35 Response to suspected or confirmed releases
Section 342L–36 Financial responsibility
Section 342L–37 Underground storage tank and tank system change in service and closure requirements
Section 342L–50 Definitions (except ''owner'' insofar as it defines lenders as operators and subjects such lenders to requirements other than the corrective action requirements)

(2) Hawaii Revised Statutes, Chapter 342D, Water Pollution.
Section 342D–1 Definitions
Section 342D–4 Duties; rules
Section 342D–7 Variances (Insofar as paragraph (a) of this appendix is applicable to the underground storage tank program)
Section 342D–38 Hazardous substance defined
Section 342D–50 Prohibition
Section 342D–51 Affirmative duty to report discharges

(3) Hawaii Revised Statutes, Chapter 342E, Nonpoint Source Pollution Management and Control.
Section 342E–1 Definitions
Section 342E–2 Nonpoint source pollution management and control program

(b) The regulatory provisions include:

(1) Hawaii Administrative Rules, Chapter 11–281, Underground Storage Tanks
Section 11–281–01 Applicability
Section 11–281–02 Prohibition for deferred underground storage tanks or tank systems
Section 11–281–03 Definitions (except ''complaint'' insofar as it sets forth enforcement authorities; ''farm tank'' insofar as it regulates tanks on farms that are not used for farm or commercial purposes; ''field citation'' and ''force majeure'' insofar as they relate to the Department's enforcement authorities; ''regulated substance'' insofar as the Department can designate other substances; ''reportable quantity'' insofar as it sets forth a reporting threshold of 10 lbs. for trichloropropane; and ''underground storage tank'' insofar as its designation of farm tanks exceeds the scope of the federal regulations)
Section 11–281–11 Performance standards for underground storage tanks and tank systems
Section 11–281–12 Tank requirements
Section 11–281–13 Piping requirements
Section 11–281–14 Spill and overfill prevention equipment
Section 11–281–15 Installation
Section 11–281–16 Certification of installation
Section 11–281–17 Secondary containment
Section 11–281–18 Upgrading of existing underground storage tanks and tank systems
Section 11–281–21 Notification requirements for tanks brought into use before the effective date of these rules
Section 11–281–22 Notification requirements for tanks brought into use on or after the effective date of these rules
Section 11–281–24 Application for a permit (except insofar as paragraphs (a), (b), (c)(3), and (c)(4) of this section relate to the permitting program)
Section 11–281–25 Permit (except insofar as paragraphs (a) and (b) of this section relate to the permitting program)
Section 11–281–41 Spill and overfill control
Section 11–281–42 Operation and maintenance of corrosion protection systems
Section 11–281–43 Compatibility
Section 11–281–44 Repairs
Section 11–281–45 Reporting and recordkeeping (except paragraph (b)(3) of this section insofar as it addresses posting of signs; and paragraph (c)(6) insofar as it requires maintenance of permit records)
Section 11–281–51 General requirements for all underground storage tanks or tank systems
Section 11–281–52 Methods of release detection for tanks
Section 11–281–53 Methods of release detection for piping
Section 11–281–54 Release detection recordkeeping
Section 11–281–61 Reporting of suspected releases
Section 11–281–62 Investigation of off-site impacts
Section 11–281–63 Release investigation and confirmation steps
Section 11–281–64 Reporting and cleanup of spills and overfills
Section 11–281–71 General
Section 11–281–72 Immediate response actions
Section 11–281–74 Initial abatement measures and site assessment
Section 11–281–75 Initial site characterization
Section 11–281–76 Free product removal
Section 11–281–77 Investigation of soil and ground water contamination
Section 11–281–78 Site cleanup criteria
Section 11–281–78.1 Notification of confirmed releases
Section 11–281–79 Corrective action plan
Section 11–281–80 Public participation for corrective action plans [except paragraph (j) insofar as it sets forth enforcement authorities]
Section 11–281–80.1 Reporting and recordkeeping
Section 11–281–81 Temporary closure
Section 11–281–82 Permanent closure and change-in-service
Section11–281–83 Site assessment
Section 11–281–84 Previously closed underground storage tanks or tank systems
Section 11–281–85 Closure records
Section 11–281–91 Applicability
Section 11–281–93 Definition of terms
Section 11–281–94 Amount and scope of required financial responsibility
Section 11–281–95 Allowable mechanisms and combinations of mechanisms
Section 11–281–96 Financial test of self-insurance
Section 11–281–97 Guarantee
Section 11–281–98 Insurance and risk retention group
Section 11–281–99 Surety bond
Section 11–281–100 Letter of credit
Section 11–281–101 Trust fund
Section 11–281–102 Standby trust fund
Section 11–281–103 Local government bond rating test
Section 11–281–104 Local government financial test
Section 11–281–106 Local government guarantee
Section 11–281–107 Local government fund
Section 11–281–108 Substitution of financial assurance mechanisms by owner or operator
Section 11–281–109 Cancellation or nonrenewal by a provider of financial assurance
Section 11–281–110 Reporting by owner or operator
Section 11–281–111 Recordkeeping
Section 11–281–112 Drawing on financial assurance mechanisms
Section 11–281–113 Release from financial responsibility
Section 11–281–114 Bankruptcy or other incapacity of owner or operator or provider of financial assurance
Section 11–281–115 Replenishment of guarantees, letters of credit, or surety bonds
Section 11–281–131 Appendices I and III (Notification for Underground Storage Tanks, June 1999 and Certification of Underground Storage Tank Installation, June 1999)

(2) Hawaii Administrative Rules, Chapter 11–264, Hazardous Waste Management: Standards for Owners and Operators of Hazardous Waste Treatment, Storage, and Disposal Facilities, Subpart J, Tank Systems.
Section 11–264–190 Applicability
Section 11–264–191 Assessment of existing tank system's integrity
Section 11–264–192 Design and installation of new tank systems or components
Section 11–264–193 Containment and detection of releases
Section 11–264–194 General operating requirements
Section 11–264–195 Inspections
Section 11–264–196 Response to leaks or spills and disposition of leaking or unfit-for use tank systems

Section 11–264–197 Closure and post-closure care
Section 11–264–198 Special requirements for ignitable or reactive wastes
Section 11–264–199 Special requirements for incompatible wastes
Section 11–264–200 Air emission standards

[FR Doc. E8–21497 Filed 9–16–08; 8:45 am]

BILLING CODE 6560–50–P

## DEPARTMENT OF HOMELAND SECURITY

### Federal Emergency Management Agency

### 44 CFR Part 64

**[Docket No. FEMA–8039]**

### Suspension of Community Eligibility

**AGENCY:** Federal Emergency Management Agency, Department of Homeland Security.

**ACTION:** Final rule.

**SUMMARY:** This rule identifies communities, where the sale of flood insurance has been authorized under the National Flood Insurance Program (NFIP), that are scheduled for suspension on the effective dates listed within this rule because of noncompliance with the floodplain management requirements of the program. If the Federal Emergency Management Agency (FEMA) receives documentation proving the community has adopted the required floodplain management measures prior to the effective suspension date given in this rule, the suspension will not occur and a notice will be provided by publication in the **Federal Register** on a subsequent date.

**DATES:** *Effective Date:* The effective date of each community's scheduled suspension is the third date (''Susp.'') listed in the third column of the following tables.

**FOR FURTHER INFORMATION CONTACT:** If you want to determine whether a particular community was suspended on the suspension date or obtain additional information, contact David Stearrett, Federal Emergency Management Agency, Mitigation Directorate, 500 C Street, SW., Washington, DC 20472, (202) 646–2953.

**SUPPLEMENTARY INFORMATION:** The NFIP enables property owners to purchase flood insurance which is generally not otherwise available. In return, communities agree to adopt and administer local floodplain management aimed at protecting lives and new construction from future flooding. Section 1315 of the National Flood Insurance Act of 1968, as amended, 42 U.S.C. 4022, prohibits flood insurance coverage as authorized under the NFIP, 42 U.S.C. 4001 *et seq.*; unless an appropriate public body adopts adequate floodplain management measures with effective enforcement measures. The communities listed in this document no longer meet the statutory requirement for compliance with program regulations, 44 CFR part 59. Accordingly, the communities will be suspended on the effective date in the third column. As of that date, flood insurance will no longer be available in the community. However, some of these communities may adopt and submit the required documentation of legally enforceable floodplain management measures after this rule is published but prior to the actual suspension date. These communities will not be suspended and will continue their eligibility for the sale of insurance. A notice withdrawing the suspension of the communities will be published in the **Federal Register**.

Previously, FEMA identified the Special Flood Hazard Areas (SFHAs) in these communities by publishing a Flood Insurance Rate Map (FIRM). The date of the FIRM, if one has been published, is indicated in the fourth column of the table. No direct Federal financial assistance (except assistance pursuant to the Robert T. Stafford Disaster Relief and Emergency Assistance Act not in connection with a flood) may legally be provided for construction or acquisition of buildings in identified SFHAs for communities not participating in the NFIP and identified for more than a year, on the FEMA initial flood insurance map of the community as having flood-prone areas (section 202(a) of the Flood Disaster Protection Act of 1973, 42 U.S.C. 4106(a), as amended). This prohibition against certain types of Federal assistance becomes effective for the communities listed on the date shown in the last column. The Administrator finds the notice and public comment under 5 U.S.C. 553(b) are impracticable and unnecessary because the communities listed in this final rule have been adequately notified.

Each community receives 6-month, 90-day, and 30-day notification letters addressed to the Chief Executive Officer stating the community will be suspended unless the required floodplain management measures are met prior to the effective suspension date. Since these notifications were made, this final rule may take effect within less than 30 days.

*National Environmental Policy Act.* This rule is categorically excluded from the requirements of 44 CFR Part 10, Environmental Considerations. No environmental impact assessment has been prepared.

*Regulatory Flexibility Act.* The Administrator has determined this rule is exempt from the requirements of the Regulatory Flexibility Act because the National Flood Insurance Act of 1968, as amended, 42 U.S.C. 4022, prohibits flood insurance coverage unless an appropriate public body adopts adequate floodplain management measures with effective enforcement measures. The communities listed no longer comply with the statutory requirements, and after the effective date, flood insurance will no longer be available in the communities unless remedial action takes place.

*Regulatory Classification.* This final rule is not a significant regulatory action under the criteria of section 3(f) of Executive Order 12866 of September 30, 1993, Regulatory Planning and Review, 58 FR 51735.

*Executive Order 13132, Federalism.* This rule involves no policies that have federalism implications under Executive Order 13132.

*Executive Order 12988, Civil Justice Reform.* This rule meets the applicable standards of Executive Order 12988.

*Paperwork Reduction Act.* This rule does not involve any collection of information for purposes of the Paperwork Reduction Act, 44 U.S.C. 3501 *et seq.*

**List of Subjects in 44 CFR Part 64**

Flood insurance, Floodplains.

■ Accordingly, 44 CFR Part 64 is amended as follows:

## PART 64—[AMENDED]

■ 1. The authority citation for Part 64 continues to read as follows:

**Authority:** 42 U.S.C. 4001 *et seq.*; Reorganization Plan No. 3 of 1978, 3 CFR, 1978 Comp.; p. 329; E.O. 12127, 44 FR 19367, 3 CFR, 1979 Comp.; p. 376.

### § 64.6 [Amended]

■ 2. The tables published under the authority of § 64.6 are amended as follows:

| State and location | Community No. | Effective date authorization/cancellation of sale of flood insurance in community | Current effective map date | Date certain Federal assistance no longer available in SFHAs |
|---|---|---|---|---|
| **Region IV** | | | | |
| North Carolina: | | | | |
| Albermarle, City of, Stanly County | 370223 | March 19, 1974, Emerg; December 1, 1981, Reg; September 3, 2008, Susp. | Sept. 3, 2008 | Sept. 3, 2008. |
| Badin, Town of, Stanly County | 370417 | September 24, 2002, Emerg; September 24, 2002, Reg; September 3, 2008, Susp. | do | Do. |
| Locust, City of, Stanly County | 370508 | May 29, 2003, Emerg; May 29, 2003, Reg; September 3, 2008, Susp. | do | Do. |
| Norwood, Town of, Stanly County | 370509 | May 17, 2000, Emerg; September 21, 2000, Reg; September 3, 2008, Susp. | do | Do. |
| Oakboro, Town of, Stanly County | 370493 | July 9, 1997, Emerg; September 21, 2000, Reg; September 3, 2008, Susp. | do | Do. |
| Polk County, Unincorporated Areas | 370194 | January 15, 1974, Emerg; January 1, 1987, Reg; September 3, 2008, Susp. | do | Do. |
| Stanly County, Unincorporated Areas | 370361 | July 12, 1979, Emerg; December 1, 1981, Reg; September 3, 2008, Susp. | do | Do. |
| Tryon, Town of, Polk County | 370271 | March 5, 1974, Emerg; August 19, 1986, Reg; September 3, 2008, Susp. | do | Do. |
| Tennessee: | | | | |
| Erwin, City of, Unicoi County | 470094 | April 20, 1978, Emerg; September 5, 1984, Reg; September 3, 2008, Susp. | do | Do. |
| Unicoi County, Unincorporated Areas | 470238 | December 17, 1979, Emerg; January 3, 1985, Reg; September 3, 2008, Susp. | do | Do. |

*do=Ditto.
Code for reading third column: Emerg.—Emergency; Reg.—Regular; Susp—Suspension.

Dated: September 8, 2008.

**David I. Maurstad,**

*Assistant Administrator for Mitigation, Department of Homeland Security, Federal Emergency Management Agency.*

[FR Doc. E8–21684 Filed 9–16–08; 8:45 am]

**BILLING CODE 9110–12–P**

## DEPARTMENT OF HOMELAND SECURITY

## Federal Emergency Management Agency

## 44 CFR Part 64

**[Docket No. FEMA–8041]**

## Suspension of Community Eligibility

**AGENCY:** Federal Emergency Management Agency, Department of Homeland Security.

**ACTION:** Final rule.

**SUMMARY:** This rule identifies communities, where the sale of flood insurance has been authorized under the National Flood Insurance Program (NFIP), that are scheduled for suspension on the effective dates listed within this rule because of noncompliance with the floodplain management requirements of the program. If the Federal Emergency Management Agency (FEMA) receives documentation proving the community has adopted the required floodplain management measures prior to the effective suspension date given in this rule, the suspension will not occur and a notice will be provided by publication in the **Federal Register** on a subsequent date.

**DATES:** *Effective Dates:* The effective date of each community's scheduled suspension is the third date (''Susp.'') listed in the third column of the following tables.

**FOR FURTHER INFORMATION CONTACT:** If you want to determine whether a particular community was suspended on the suspension date or to obtain additional information, contact David Stearrett, Federal Emergency Management Agency, Mitigation Directorate, 500 C Street, SW., Washington, DC 20472, (202) 646–2953.

**SUPPLEMENTARY INFORMATION:** The NFIP enables property owners to purchase flood insurance which is generally not otherwise available. In return, communities agree to adopt and administer local floodplain management aimed at protecting lives and new construction from future flooding. Section 1315 of the National Flood Insurance Act of 1968, as amended, 42 U.S.C. 4022, prohibits flood insurance coverage as authorized under the NFIP, 42 U.S.C. 4001 *et seq.*; unless an appropriate public body adopts adequate floodplain management measures with effective enforcement measures. The communities listed in this document no longer meet the statutory requirement for compliance with program regulations, 44 CFR part 59. Accordingly, the communities will be suspended on the effective date in the third column. As of that date, flood insurance will no longer be available in the community. However, some of these communities may adopt and submit the required documentation of legally enforceable floodplain management measures after this rule is published but prior to the actual suspension date. These communities will not be suspended and will continue their eligibility for the sale of insurance. A notice withdrawing the suspension of the communities will be published in the **Federal Register**.

Previously, FEMA identified the Special Flood Hazard Areas (SFHAs) in these communities by publishing a Flood Insurance Rate Map (FIRM). The date of the FIRM, if one has been published, is indicated in the fourth column of the table. No direct Federal financial assistance (except assistance pursuant to the Robert T. Stafford Disaster Relief and Emergency Assistance Act not in connection with a flood) may legally be provided for construction or acquisition of buildings in identified SFHAs for communities not participating in the NFIP and identified for more than a year, on the FEMA initial flood insurance map of the community as having flood-prone areas (section 202(a) of the Flood Disaster Protection Act of 1973, 42 U.S.C. 4106(a), as amended). This prohibition

against certain types of Federal assistance becomes effective for the communities listed on the date shown in the last column. The Administrator finds the notice and public comment under 5 U.S.C. 553(b) are impracticable and unnecessary because the communities listed in this final rule have been adequately notified.

Each community receives 6-month, 90-day, and 30-day notification letters addressed to the Chief Executive Officer stating the community will be suspended unless the required floodplain management measures are met prior to the effective suspension date. Since these notifications were made, this final rule may take effect within less than 30 days.

*National Environmental Policy Act.* This rule is categorically excluded from the requirements of 44 CFR part 10, Environmental Considerations. No environmental impact assessment has been prepared.

*Regulatory Flexibility Act.* The Administrator has determined this rule is exempt from the requirements of the Regulatory Flexibility Act because the National Flood Insurance Act of 1968, as amended, 42 U.S.C. 4022, prohibits flood insurance coverage unless an appropriate public body adopts adequate floodplain management measures with effective enforcement measures. The communities listed no longer comply with the statutory requirements, and after the effective date, flood insurance will no longer be available in the communities unless remedial action takes place.

*Regulatory Classification.* This final rule is not a significant regulatory action under the criteria of section 3(f) of Executive Order 12866 of September 30, 1993, Regulatory Planning and Review, 58 FR 51735.

*Executive Order 13132, Federalism.* This rule involves no policies that have federalism implications under Executive Order 13132.

*Executive Order 12988, Civil Justice Reform.* This rule meets the applicable standards of Executive Order 12988.

*Paperwork Reduction Act.* This rule does not involve any collection of information for purposes of the Paperwork Reduction Act, 44 U.S.C. 3501 *et seq.*

**List of Subjects in 44 CFR Part 64**

Flood insurance, Floodplains.

■ Accordingly, 44 CFR part 64 is amended as follows:

## PART 64—[AMENDED]

■ 1. The authority citation for part 64 continues to read as follows:

**Authority:** 42 U.S.C. 4001 *et seq.*; Reorganization Plan No. 3 of 1978, 3 CFR, 1978 Comp.; p. 329; E.O. 12127, 44 FR 19367, 3 CFR, 1979 Comp.; p. 376.

### § 64.6 [Amended]

■ 2. The tables published under the authority of § 64.6 are amended as follows:

| State and location | Community No. | Effective date authorization/cancellation of sale of flood insurance in community | Current effective map date | Date certain federal assistance no longer available in SFHAs |
|---|---|---|---|---|
| **Region IV** | | | | |
| North Carolina: | | | | |
| Davie County, Unincorporated Areas .... | 370308 | December 23, 1975, Emerg; March 21, 1980, Reg; September 17, 2008, Susp. | 09/17/2008 ..... | 09/17/2008. |
| Mocksville, Town of, Davie County ..... | 370309 | August 12, 2002, Emerg;—, Reg; September 17, 2008, Susp. | .....do ..... | Do. |
| **Region V** | | | | |
| Michigan: | | | | |
| Brighton, City of, Livingston County ..... | 260783 | December 16, 1986, Emerg; April 5, 1988, Reg; September 17, 2008, Susp. | .....do ..... | Do. |
| Fowlerville, Village of, Livingston County. | 260439 | August 7, 1975, Emerg; February 19, 1987, Reg; September 17, 2008, Susp. | .....do ..... | Do. |
| Genoa, Township of, Livingston County | 260843 | July 12, 2007, Emerg;—, Reg; September 17, 2008, Susp. | .....do ..... | Do. |
| Green Oak, Township of, Livingston County. | 260440 | March 10, 1982, Emerg; October 16, 1984, Reg; September 17, 2008, Susp. | .....do ..... | Do. |
| Hamburg, Township of, Livingston County. | 260118 | July 23, 1974, Emerg; February 19, 1986, Reg; September 17, 2008, Susp. | .....do ..... | Do. |
| Handy, Township of, Livingston County | 260827 | February 7, 1990, Emerg;—, Reg; September 17, 2008, Susp. | .....do ..... | Do. |
| Hartland, Township of, Livingston County. | 260784 | November 25, 1986, Emerg; May 17, 1989, Reg; September 17, 2008, Susp. | .....do ..... | Do. |
| Howell, City of, Livingston County ..... | 260441 | December 8, 1975, Emerg; August 4, 1987, Reg; September 17, 2008, Susp. | .....do ..... | Do. |
| Marion, Township of, Livingston County | 260846 | February 29, 2008, Emerg;—, Reg; September 17, 2008, Susp. | .....do ..... | Do. |
| Putnam, Township of, Livingston County. | 260442 | December 21, 1978, Emerg; February 6, 1984, Reg; September 17, 2008, Susp. | .....do ..... | Do. |

*do=Ditto.
Code for reading third column: Emerg.—Emergency; Reg.—Regular; Susp.—Suspension.

Dated: September 9, 2008.

**David I. Maurstad,**

*Assistant Administrator for Mitigation, Department of Homeland Security, Federal Emergency Management Agency.*

[FR Doc. E8–21777 Filed 9–16–08; 8:45 am]

**BILLING CODE 9110–12–P**

## DEPARTMENT OF HOMELAND SECURITY

## Federal Emergency Management Agency

**44 CFR Part 65**
**[Docket No. FEMA–B–1005]**

## Changes in Flood Elevation Determinations

**AGENCY:** Federal Emergency Management Agency, DHS.

**ACTION:** Interim rule.

**SUMMARY:** This interim rule lists communities where modification of the Base(1% annual-chance) Flood Elevations (BFEs) is appropriate because of new scientific or technical data. New flood insurance premium rates will be calculated from the modified BFEs for new buildings and their contents.

**DATES:** These modified BFEs are currently in effect on the dates listed in the table below and revise the Flood Insurance Rate Maps (FIRMs) in effect prior to this determination for the listed communities.

From the date of the second publication of these changes in a newspaper of local circulation, any person has ninety (90) days in which to request through the community that the Mitigation Assistant Administrator of FEMA reconsider the changes. The modified BFEs may be changed during the 90-day period.

**ADDRESSES:** The modified BFEs for each community are available for inspection at the office of the Chief Executive Officer of each community. The respective addresses are listed in the table below.

**FOR FURTHER INFORMATION CONTACT:** William R. Blanton, Jr., Engineering Management Branch, Mitigation Directorate, Federal Emergency Management Agency, 500 C Street, SW., Washington, DC 20472, (202) 646–3151.

**SUPPLEMENTARY INFORMATION:** The modified BFEs are not listed for each community in this interim rule. However, the address of the Chief Executive Officer of the community where the modified BFE determinations are available for inspection is provided.

Any request for reconsideration must be based on knowledge of changed conditions or new scientific or technical data.

The modifications are made pursuant to section 201 of the Flood Disaster Protection Act of 1973, 42 U.S.C. 4105, and are in accordance with the National Flood Insurance Act of 1968, 42 U.S.C. 4001 *et seq.,* and with 44 CFR part 65.

For rating purposes, the currently effective community number is shown and must be used for all new policies and renewals.

The modified BFEs are the basis for the floodplain management measures that the community is required to either adopt or to show evidence of being already in effect in order to qualify or to remain qualified for participation in the National Flood Insurance Program (NFIP).

These modified BFEs, together with the floodplain management criteria required by 44 CFR 60.3, are the minimum that are required. They should not be construed to mean that the community must change any existing ordinances that are more stringent in their floodplain management requirements. The community may at any time enact stricter requirements of its own, or pursuant to policies established by the other Federal, State, or regional entities. The changes to BFEs are in accordance with 44 CFR 65.4.

*National Environmental Policy Act.* This interim rule is categorically excluded from the requirements of 44 CFR part 10, Environmental Consideration. An environmental impact assessment has not been prepared.

*Regulatory Flexibility Act.* As flood elevation determinations are not within the scope of the Regulatory Flexibility Act, 5 U.S.C. 601–612, a regulatory flexibility analysis is not required.

*Regulatory Classification.* This interim rule is not a significant regulatory action under the criteria of section 3(f) of Executive Order 12866 of September 30, 1993, Regulatory Planning and Review, 58 FR 51735.

*Executive Order 13132, Federalism.* This interim rule involves no policies that have federalism implications under Executive Order 13132, Federalism.

*Executive Order 12988, Civil Justice Reform.* This interim rule meets the applicable standards of Executive Order 12988.

### List of Subjects in 44 CFR Part 65

Flood insurance, Floodplains, Reporting and recordkeeping requirements.

■ Accordingly, 44 CFR part 65 is amended to read as follows:

## PART 65—[AMENDED]

■ 1. The authority citation for part 65 continues to read as follows:

**Authority:** 42 U.S.C. 4001 *et seq.*; Reorganization Plan No. 3 of 1978, 3 CFR, 1978 Comp., p. 329; E.O. 12127, 44 FR 19367, 3 CFR, 1979 Comp., p. 376.

### § 65.4 [Amended]

2. The tables published under the authority of § 65.4 are amended as follows:

| State and county | Location and case No. | Date and name of newspaper where notice was published | Chief executive officer of community | Effective date of modification | Community No. |
|---|---|---|---|---|---|
| Arizona: | | | | | |
| Cochise | Unincorporated areas of Cochise County (06–09–B939P). | July 31, 2008; August 7, 2008; *Sierra Vista Herald.* | The Honorable Richard Searle, Chairman, Cochise County Board of Supervisors, 1415 West Melody Lane, Building G, Bisbee, AZ 85603. | September 2, 2008 | 040012 |
| Cochise | City of Sierra Vista (06–09–B939P). | July 31, 2008; August 7, 2008; *Sierra Vista Herald.* | The Honorable Bob Strain, Mayor, City of Sierra Vista, 1011 North Coronado Drive, Sierra Vista, AZ 85635. | September 2, 2008 | 040017 |
| Maricopa | City of Glendale (08–09–1010P). | August 7, 2008; August 14, 2008; *The Glendale Star.* | The Honorable Elaine M. Scruggs, Mayor, City of Glendale, 5850 West Glendale Avenue, Glendale, AZ 85301. | December 12, 2008 | 040045 |
| Pima | Unincorporated areas of Pima County (08–09–0454P). | August 7, 2008; August 14, 2008; *The Daily Territorial.* | The Honorable Richard Elias, Chairman, Pima County Board of Supervisors, 130 West Congress, 11th Floor, Tucson, AZ 85701. | July 21, 2008 | 040073 |
| Pima | City of Tucson (08–09–0454P). | August 7, 2008; August 14, 2008; *The Daily Territorial.* | The Honorable Bob Walkup, Mayor, City of Tucson, P.O. Box 27210, Tucson, AZ 85726. | July 21, 2008 | 040076 |

| State and county | Location and case No. | Date and name of newspaper where notice was published | Chief executive officer of community | Effective date of modification | Community No. |
|---|---|---|---|---|---|
| Yavapai | City of Prescott (08–09–0020P). | August 21, 2008; August 28, 2008; *Prescott Daily Courier*. | The Honorable Jack Wilson, Mayor, City of Prescott, 201 South Cortez Street, Prescott, AZ 86303. | December 26, 2008 | 040098 |
| California: San Diego. | Unincorporated areas of San Diego County (08–09–0332P). | August 18, 2008; August 25, 2008; *San Diego Daily Transcript*. | Mr. Ron Roberts, San Diego County Board of Supervisors, 1600 Pacific Highway, Room 335, San Diego, CA 92101. | December 23, 2008 | 060284 |
| Florida: | | | | | |
| Collier | City of Marco Island (08–04–4259P). | August 14, 2008; August 21, 2008; *Naples Daily News*. | The Honorable William D. Trotter, Chairman, City Council, City of Marco Island, 50 Bald Eagle Drive, Marco Island, FL 34145. | July 31, 2008 | 120426 |
| Lee | Unincorporated areas of Lee County (08–04–2060P). | August 13, 2008; August 20, 2008; *Fort Meyer News Press*. | The Honorable Ray Judah, Chairman, Lee County Board of Commissioners, P.O. Box 398, Fort Myers, FL 33902. | August 29, 2008 | 125124 |
| Miami-Dade | City of Miami (08–04–2590P). | August 15, 2008; August 22, 2008; *Miami Herald*. | The Honorable Manuel A. Diaz, Mayor, City of Miami, 3500 Pan American Drive, Miami, FL 33133. | July 31, 2008 | 120650 |
| Georgia: | | | | | |
| Barrow | Unincorporated areas of Barrow County (08–04–3647P). | August 6, 2008; August 13, 2008; *The Barrow County News*. | The Honorable Douglas H. Garrison, Chairman, Barrow County Board of Commissioners, 233 East Broad Street, Winder, GA 30680. | December 11, 2008 | 130497 |
| Gwinnett | City of Duluth (08–04–3497P). | August 14, 2008; August 21, 2008; *Gwinnett Daily Post*. | The Honorable Nancy Harris, Mayor, City of Duluth, 3167 Main Street, Duluth, GA 30096. | August 12, 2008 | 130098 |
| Muscogee County Consolidated Government. | City of Columbus (08–04–4426P). | May 22, 2008; May 29, 2008; *Columbus Ledger-Enquirer*. | The Honorable Jim Wetherington, Mayor, City of Columbus—Muscogee County Consolidated Government, P.O. Box 1340, Columbus, GA 31902. | August 27, 2008 | 135158 |
| Illinois: Will | Village of Shorewood (08–05–1099P). | August 12, 2008; August 19, 2008; *The Herald News*. | The Honorable Richard E. Chapman, Village President, Village of Shorewood, One Towne Center Boulevard, Shorewood, IL 60404. | July 31, 2008 | 170712 |
| Massachusetts: Essex. | City of Beverly (08–01–0002P). | August 13, 2008; August 20, 2008; *The Salem News*. | The Honorable William Scanlon, Jr., Mayor, City of Beverly, 191 Cabot Street, Beverly, MA 01915. | August 1, 2008 | 250077 |
| Montana: Flathead | Unincorporated areas of Flathead County (08–08–0149P). | August 15, 2008; August 22, 2008; *Daily Inter Lake*. | The Honorable Gary D. Hall, Chairman, Flathead County Board of Commissioners, 800 South Main Street, Kalispell, MT 59901. | July 31, 2008 | 300023 |
| North Carolina: Alamance. | City of Burlington (07–04–6274P). | August 8, 2008; August 15, 2008; *The Times-News*. | The Honorable Ronnie K. Wall, Mayor, City of Burlington, Municipal Building, P.O. Box 1358, 425 South Lexington Avenue, Burlington, North Carolina 27216. | December 15, 2008 | 370002 |
| South Carolina: | | | | | |
| Richland | City of Columbia (08–04–0847P). | August 15, 2008; August 22, 2008; *The Columbia Star*. | The Honorable Robert D. Coble, Mayor, City of Columbia, P.O. Box 147, Columbia, SC 29217. | August 30, 2008 | 450172 |
| Richland | City of Forest Acres (08–04–0847P). | August 15, 2008; August 22, 2008; *The Columbia Star*. | The Honorable Frank Brunson, Mayor, City of Forest Acres, 5205 North Trenholm Road, Forest Acres, SC 29206. | August 30, 2008 | 450174 |
| Richland | Unincorporated areas of Richland County (08–04–2062P). | August 22, 2008; August 29, 2008; *The Columbia Star*. | The Honorable Joseph McEachern, Chairman, Richland County Council, Richland County Administrative Building, 2020 Hampton Street, Second Floor, Columbia, SC 29202. | July 31, 2008 | 450170 |
| Tennessee: Knox | Unincorporated areas of Knox County (08–04–3371P). | August 13, 2008; August 20, 2008; *The Knoxville News-Sentinel*. | The Honorable Mike Ragsdale, Mayor, Knox County, 400 Main Street, Suite 615, Knoxville, TN 37902. | September 2, 2008 | 475433 |
| Texas: | | | | | |
| Bexar | Unincorporated areas of Bexar County (08–06–0467P). | August 1, 2008; August 8, 2008; *Daily Commercial Recorder*. | The Honorable Nelson W. Wolff, Bexar County Judge, 100 Dolorosa Street, Suite 1.20, San Antonio, TX 78205. | December 8, 2008 | 480035 |
| Bexar | City of San Antonio (08–06–0206P). | July 31, 2008; August 7, 2008; *San Antonio Express News*. | The Honorable Phil Hardberger, Mayor, City of San Antonio, P.O. Box 839966, San Antonio, TX 78283. | December 5, 2008 | 480045 |
| Dallas | City of Desoto (08–06–0205P). | August 1, 2008; August 8, 2008; *Focus Daily News*. | The Honorable Bobby Waddle, Mayor, City of Desoto, 211 East Pleasant Run Road, Desoto, TX 75115. | November 31, 2008 | 480172 |
| Denton | City of Denton (08–06–1636P). | August 13, 2008; August 20, 2008; *Denton Record-Chronicle*. | The Honorable Mark Burroughs, Mayor, City of Denton, 215 East Mckinney Street, Denton, TX 76201. | December 18, 2008 | 480194 |
| Denton | Unincorporated areas of Denton County (08–06–1636P). | August 13, 2008; August 20, 2008; *Denton Record-Chronicle*. | The Honorable Mary Horn, Denton County Judge, 110 West Hickory Street, 2nd Floor, Denton, TX 76201. | December 18, 2008 | 480774 |

| State and county | Location and case No. | Date and name of newspaper where notice was published | Chief executive officer of community | Effective date of modification | Community No. |
|---|---|---|---|---|---|
| Harris | Unincorporated areas of Harris County (08–06–0268P). | August 18, 2008; August 25, 2008; *Houston Chronicle*. | The Honorable Ed Emmett, Harris County Judge, 1001 Preston Street, Suite 911, Houston, TX 77002. | December 23, 2008 | 480287 |
| Utah: Davis | City of Kaysville (08–08–0369P). | August 21, 2008; August 28, 2008; *Standard Examiner*. | The Honorable Neka Roundy, Mayor, City of Kaysville, 23 East Center Street, Kaysville, UT 84037. | December 26, 2008 | 490046 |
| Virginia: Fauquier | Unincorporated areas of Fauquier County (08–03–0544P). | August 13, 2008; August 20, 2008; *Fauquier Times Democrat*. | The Honorable Chester Stribling, Chairman, Board of Supervisors, Fauquier County, 10 Hotel Street, Warrenton, VA 20186. | July 31, 2008 | 510055 |

(Catalog of Federal Domestic Assistance No. 97.022, ''Flood Insurance.'')

Dated: September 10, 2008.

**David I. Maurstad,**

*Federal Insurance Administrator of the National Flood Insurance Program, Department of Homeland Security, Federal Emergency Management Agency.*

[FR Doc. E8–21689 Filed 9–16–08; 8:45 am]

**BILLING CODE 9110–12–P**

## CORPORATION FOR NATIONAL AND COMMUNITY SERVICE

### 45 CFR Parts 2510, 2513, 2516, 2517, 2520, 2521, 2522, 2523, 2524, 2540, 2541, and 2550

**RIN 3045–AA23**

### AmeriCorps National Service Program

**AGENCY:** Corporation for National and Community Service.

**ACTION:** Final rule.

**SUMMARY:** The Corporation for National and Community Service (''the Corporation'') is issuing several amendments to existing provisions relating to the AmeriCorps national service program and adding rules to clarify the Corporation's prohibition on making false or misleading statements and requirements for participant evaluations, living allowance disbursements, multiple applications for the same project, use of national service insignia, and other requirements.

**DATES:** This final rule is effective November 17, 2008.

**FOR FURTHER INFORMATION CONTACT:** Amy Borgstrom, Docket Manager, Corporation for National and Community Service, (202) 606–6930, TDD (202) 606–3472. Persons with visual impairments may request this rule in an alternate format.

**SUPPLEMENTARY INFORMATION:**

**List of Topics**

I. Background
II. Public Comments
III. Specifics of Final Rule and Analysis of Comments
A. Definition of Participant
B. Prohibited Activities: Voter Registration
C. Participant Evaluations and Eligibility To Serve a Second Term of Service
D. Living Allowance Disbursements
E. Waiver of Living Allowance by a Participant
F. Applications for the Same Project
G. Performance Measures
H. Civil Rights
I. Use of National Service Insignia
J. Disqualification and Forfeiture Based on False or Misleading Statements
K. Inspector General Access to Grantee Records
L. State Commission Composition Requirements
M. State Plans
IV. Summary of Redesignations
V. Effective Dates
VI. Rulemaking Analyses and Notices

## I. Background

Under the National and Community Service Act of 1990 (''NCSA'' or ''the Act''), the Corporation makes grants to support national and community service through the AmeriCorps program. In addition, the Corporation, through the National Service Trust, provides educational awards to, and certain interest payments on behalf of, AmeriCorps participants who successfully complete a term of service in an approved national service position.

On May 20, 2003, the Corporation's Board of Directors (''the Board'') approved a report issued by the Board's Grant-making Task Force in which the Task Force recommended that the Corporation undertake efforts to streamline and improve our current grant-making processes. Among other actions, the Task Force recommended that the Corporation update the grant-making review and selection criteria, simplify the application process, evaluate the Corporation's grant requirements and assess whether requirements should and could be changed, and eliminate or streamline annual guidance.

On February 27, 2004, President Bush issued Executive Order 13331 aimed at making the national and community service program better able to engage Americans in volunteering, more responsive to State and local needs, more accountable and effective, and more accessible to community organizations, including faith-based organizations. The Executive Order directed the Corporation to review and modify its policies as necessary to accomplish these goals.

This rulemaking is the second of two, originally initiated in 2004. The first rulemaking focused on sustainability and the limitation on the Federal share of program costs. The first rulemaking was completed in July, 2005, and became effective September, 2005. This rulemaking is intended chiefly to clarify several changes made in the first rulemaking, streamline and improve our current grant-making processes, strengthen accountability, and otherwise improve upon the operations of the AmeriCorps State and National program.

## II. Public Comments

The Corporation published a proposed rule in the **Federal Register** of November 19, 2007 (72 FR 64970) with a 60-day comment period. In addition to accepting comments in writing, the Corporation held two conference calls. During the public comment period, the Corporation received 3 written comments and 5 oral comments from grantees, the Corporation's Inspector General, and other interested parties.

The comments expressed views on the merits of particular sections of the proposed regulations, as well as some broader policy statements and issues. Acknowledging that there are strong views on, and competing legitimate public policy interests relating to, the issues in this rulemaking, the Corporation has carefully considered all of the comments on the proposed regulations.

The Corporation has summarized below the major comments received on the proposed regulatory changes, and has described the changes we made in the final regulatory text in response to the comments received. In addition to the more substantive comments below,

the Corporation received some editorial suggestions, some of which we have adopted. The Corporation has also made minor editorial changes to better organize the regulatory text. Finally, the Corporation received some comments on issues outside the scope of the proposed rule which the Corporation does not address in the discussion that follows.

**III. Specifics of the Final Rule and Analysis of Comments**

As discussed in more detail below, the final rule:

- Amends the definition of the term *participant* to acknowledge the frequently-used term *member* as synonymous;
- Adds voter registration to the list of prohibited activities for AmeriCorps members and staff while attributing time to the AmeriCorps program;
- Removes the requirement that grantees conduct mid-term evaluations on AmeriCorps members who leave service early;
- Changes the requirements surrounding end-of-term evaluations to clarify that completion of service hours is not necessarily required in order for a member's service to be considered satisfactory;
- Clarifies that a release ''for cause'' is not a *per se* disqualification for serving a second term of service;
- Specifies the manner in which grantees must disburse living allowances to members;
- Clarifies a member's ability to waive the living allowance;
- Codifies the circumstances under which a program may submit more than one application to the Corporation for the same project;
- Removes the requirement that grantees individually report on end-outcomes;
- Codifies the Civil Rights notice requirements for grantees;
- Specifies penalties for using the Corporation's national service insignia without the Corporation's authorization;
- Specifies the consequences for making a false or misleading statement to the Corporation;
- Reinforces the Inspector General's access to grantee records;
- Amends the State Commission composition requirements to conform them to statutory requirements; and
- Consolidates the requirements for State Plans.

*A. Definition of ''Participant'' (§ 2510.20)*

This rule amends the definition of the term participant to acknowledge the frequently-used term *member* as synonymous.

*B. Prohibited Activities: Voter Registration (§ 2520.65)*

In 1994, the Corporation issued regulations in part 2520 regarding prohibited activities for AmeriCorps members. In 2002, the Corporation strengthened the list of prohibited activities by adding items from sub-regulatory grant provisions. At that time, the Corporation inadvertently omitted the sub-regulatory prohibition on AmeriCorps members engaging in voter registration in rulemaking. This rule adds this longstanding prohibition to our regulations.

*C. Participant Evaluations and Eligibility To Serve a Second Term of Service (§ 2522.220)*

Mid-term Evaluations

Our regulations formerly required programs to conduct end-of-term and mid-term evaluations on AmeriCorps participants. Due to the fact that participants occasionally leave service early, either for cause or for compelling personal circumstances, the Corporation has determined that it is not always practicable or possible for a program to perform an official review of a participant's performance in the middle of the term. This rule removes the requirement that programs conduct mid-term evaluations for those participants who leave AmeriCorps service early. Please note that end-of-term evaluations are required for all participants, regardless of whether they leave early or on time.

One commenter asked for clarification on the timing of and reason for leaving early that would result in a program not being required to conduct a mid-term evaluation. Essentially, programs are not required to conduct a mid-term evaluation if the member leaves before the mid-term evaluation would have otherwise reasonably occurred. The reason for the member's departure is not relevant.

Another commenter asked, in a situation in which a member transfers from one program to another, whether the second program is obligated to obtain the mid-term evaluation from the first program, if there was one. The Corporation will address this question in sub-regulatory guidance.

The Corporation also wishes to clarify its intent with regard to the documentation of mid-term evaluations. We require programs to engage in mid-term evaluations, but have not provided guidance as to the structure or content of these reviews. We expect programs to tailor mid-term evaluations to fit the particular needs of the individual program. Likewise, while we require that a program document that a mid-term evaluation occurred, there is no specific required format for this documentation. Rather, the grantee should maintain documentation for each member that it has determined to be helpful to the program in conducting the end-of-term evaluation, whether that be a rating system, a narrative, notes from the mid-term evaluation interview, or other documentation.

End-of-Term Evaluations and Eligibility To Serve a Second Term of Service

The Corporation's regulations require grantees to conduct an end-of-term evaluation for each AmeriCorps participant. The purpose of this evaluation is to answer two questions: (1) Whether the participant is eligible to receive an education award; and (2) Whether the participant is eligible to serve a subsequent term of service.

To answer the first question, we look to Section 146(a) of the Act, which states that a participant is eligible to receive an education award only if the participant ''successfully completes the required term of service'' and Section 147(c), which states that a participant released for compelling personal circumstances is eligible to receive ''that portion of an education award * * * that corresponds to the quantity of the term of service actually completed.''

The second question is governed by Section 138(c) of the Act, which states that a participant is only eligible to serve a subsequent term of service if the participant ''performed satisfactorily in [the] first term of service.'' Section 138(f) of the Act directs the Corporation to ''issue regulations regarding the manner and criteria by which the service of a participant shall be evaluated to determine whether the service is satisfactory and successful for purposes of eligibility for a second term of service.''

Pursuant to this section, the Corporation previously issued regulations stating that, in determining whether a participant's performance was satisfactory, the program must assess, among other things, whether the participant satisfactorily completed assignments, tasks, or projects and whether the participant completed the required number of hours for the term of service. (45 CFR 2522.220(d)).

The Corporation did not intend to suggest that completion of service hours is a prerequisite for a determination that a participant served satisfactorily. On the contrary, an individual released for cause may, under some circumstances, be considered to have served satisfactorily and thereby be eligible to serve a subsequent term. As we stated

in the preamble to the proposed rule in 1999, ''a release for cause may cover a wide variety of circumstances and does not necessarily mean that a participant has engaged in wrongdoing or misconduct.'' (64 FR 17302). Furthermore, as provided in our long-standing AmeriCorps grant provisions, ''a member who is released for cause from a first term for personal reasons * * * but who, otherwise, was performing well up until the time [the member] decided to leave, would not be disqualified for a second term so long as [the member] received a satisfactory performance evaluation for the period * * * served.'' (2007 AmeriCorps Grant Provisions, IV.G.1).

The final rule amends the Corporation's regulations to clarify that those participants who are released for cause but who nonetheless receive a satisfactory performance review may be eligible to serve a second term of service in AmeriCorps. To make this clear, this rule makes three significant changes. First, it separates the end-of-term evaluation into two parts: (1) A determination of whether the participant is eligible to receive an education award; and (2) a participant performance and conduct review to determine whether the participant is eligible to serve a subsequent term. Second, it changes the regulatory language relating to the participant performance and conduct review to be inclusive of participants who are released from service early. Lastly, it makes clear that a release for cause is not a per se disqualification from serving a second term of service. Regarding the eligibility of a participant released for cause to serve a second term, it modifies the language relating to the participant performance and conduct review to ensure that programs are able to consider the participant's conduct in assessing whether the service was satisfactory.

The partition of the end-of-term evaluation will enable a program to consider a member's eligibility to serve a second term separately from a member's eligibility to receive an education award. An individual who serves satisfactorily may be eligible for a second term, regardless of whether the individual earned an education award. For example, an AmeriCorps member who decides to leave early to take advantage of a unique scholarship opportunity would not be eligible to receive an education award, but may be eligible to serve a second term of service if the member served satisfactorily prior to leaving early. Contrarily, an AmeriCorps member who did not serve satisfactorily and who exited early for the same reason would not earn an education award and would also be ineligible to serve a second term of service.

It is not necessary to successfully complete a term of service for a member's service to be considered satisfactory. However, a determination that a member is eligible to receive an education award based on successful completion of the agreed upon term of service necessarily encompasses a determination that the member served all the required hours, performed satisfactorily, and fulfilled all other requirements set by the program. The table below illustrates this rule in a simplified form:

| | And... | Eligible for an education award? | Eligible for a second term? |
|---|---|---|---|
| If a member performs satisfactorily | Completes service hours | Yes | Yes. |
| | Does not complete service hours | No | Yes. |
| If a member does not perform satisfactorily | Completes service hours | No | No. |
| | Does not complete service hours | No | No. |

The final rule modifies the language of the participant performance and conduct review to ensure it incorporates those participants who are released early. In the proposed rule, we proposed a requirement for programs to assess whether a participant satisfactorily completed assignments, tasks, or projects, or, for those participants released from service early, whether the participant completed those assignments, tasks, or projects that the participant could reasonably have completed in the time the participant served. (72 FR 64970, November 19, 2007).

One commenter noted that the use of the word ''completed'' in the proposed rule may have unintended negative consequences as an individual who left early may not have been able to complete anything in the time served. The Corporation agrees that the phrase ''reasonably could have completed'' is not consistent with our intent. Thus, in the final rule, the performance and conduct review will assess, in addition to any criteria developed by the program, whether the participant has satisfactorily completed assignments, tasks, or projects, or, for those participants released from service early, whether the participant ''made a satisfactory effort to complete those assignments, tasks, or projects the participant could reasonably have addressed in the time the participant served.''

The rule also changes the language so that the evaluation of the participant will henceforth occur ''at the end'' of the term of service, as opposed to ''upon completion'' of the term. By changing the language from ''completion'' to ''end,'' the Corporation intends that programs should evaluate all members, even those who do not technically complete the originally agreed-upon number of service hours.

During the public comment period, we received several comments on the eligibility of participants released for cause to serve second terms of service. One commenter expressed concern that the proposed rule would broaden the eligibility for a second term of service. In particular, the commenter noted that individuals who are released for misconduct, conviction of a felony, or for the sale or distribution of a controlled substance, may be eligible to serve a second term of service. The Corporation does not agree that the rule broadens eligibility for a second term. This rule codifies a practice supported by existing law; there is nothing in our current regulations or authorizing legislation to prohibit an individual who is released for cause but who serves satisfactorily in the first term of service from serving a subsequent term of service.

However, the Corporation does agree that a member's good conduct is a component of satisfactory service. As stated in Section 177(e) of the Act, AmeriCorps programs must ''establish and stringently enforce standards of conduct at the program site to promote proper moral and disciplinary conditions.'' Our proposed rule required programs to examine whether the participant ''has met any other *performance criteria*'' communicated by the program. To ensure that programs do not misinterpret this language to mean that the participant's performance of duties is the only factor to consider in determining whether service was satisfactory, the Corporation has

changed the rule from the proposed version by removing the word ''performance'' to clarify our intent that programs assess whether the participant has met any criteria—including performance criteria and standards of conduct—established and communicated by the program. In addition, we have changed the name of the review to a participant performance and conduct review.

For example, consider a program whose criteria include standards of conduct prohibiting members from engaging in any activity that may physically injure other members of the program and which require immediate release for cause for any member that violates this particular prohibition. Under the final rule, the program would give a member who violated this provision an unsatisfactory performance and conduct review upon release regardless of how impressive the member's service was up to that point.

One commenter suggested that the Corporation hold ineligible for subsequent service those members who were found to have engaged in misconduct, or who have had a detrimental effect on others, and to establish this standard through regulation. This commenter recommended that the Corporation develop a list such as that provided in the sample rules of conduct set out in the sample member contract distributed by the Corporation.

As stated above, programs are required, by statute, to establish and enforce standards of conduct. Because member selection and release are the responsibilities of the grantee, and not the Corporation, we generally defer to the individual programs to establish these standards. The only offenses that the Corporation has mandated will render an individual ineligible to serve a term of service in AmeriCorps at this time are those that result in the individual being subject to a State sex offender registration requirement. As stated in the Corporation's final rule on criminal background checks, the Corporation intends to consider, at a later date, adding other disqualifying factors, including specific offenses. (72 FR 48574, August 24, 2007).

Notably, individuals who were released for cause from the first term of service are required under our regulations to disclose this fact on any subsequent application for service with an AmeriCorps program. (45 CFR 2522.230(b)(2)). Consequently, the Corporation anticipates that programs will consider the facts surrounding the prior release when determining whether to select the individual for service.

One commenter stated that the proposed rule should provide that a release for cause from a term of service counts as one of the two terms of service that may be subsidized with federal funds. We agree that our regulations need to clarify this point. Our regulations state that an AmeriCorps participant may only receive an education award, a living allowance, health care, and child care benefits supported with federal funds for the first two successfully-completed terms of service. (45 CFR 2522.220(b)). Clearly, a term in which a member exits for cause is not a successfully completed term. Section 140(h) of the Act limits the number of terms of service which can be supported with federal funds to two, but does not require that those terms be successfully completed. The final rule amends section 2522.220(b) by removing the words ''successfully completed.'' In addition, the final rule adds language to clarify that a release for cause counts as one of the two terms of service for which an individual may receive benefits supported with federal funds.

In making this change, the final rule also adds language to clarify that if a participant is released for cause for reasons other than misconduct prior to completing fifteen percent of a term of service, the term will not be considered one of the two terms of service for which an individual may receive benefits supported with federal funds.

One commenter expressed concern that our proposed section 2522.230(b)(6), which states that a release for cause is not a *per se* disqualification from serving a second term of service, would allow an individual to serially start programs and leave for cause prior to completing 15% of the term of service. The rule that a release for misconduct prior to serving 15% of a term counts as one of the two terms of service will prevent any person who is released for misconduct from serially starting and exiting programs. While there is no prohibition on an individual making repeated efforts to serve in AmeriCorps and leaving prior to serving 15% so long as the cause for exiting the program is not misconduct, the My AmeriCorps portal will enable programs to see each program with which an applicant has served, regardless of the length of the service. Thus, programs will be able to identify an individual who habitually enters and leaves AmeriCorps service prior to serving 15% of the term, and take that fact into account in making their selection decisions.

One commenter recommended that the Corporation establish a third category for release in addition to releases for cause or for compelling personal circumstances because a release for cause seems to indicate a release for disciplinary reasons. The Corporation cannot create a third or additional category of release, as section 139(c) of the Act identifies only two types of release: for cause and for compelling personal circumstances. However, as discussed above, participants who are released because they engaged in misconduct should be treated differently than participants who are released for a cause the program feels is reasonable (such as, for example, taking advantage of a limited time scholarship opportunity); as a release for cause covers both of these types of situations, the final rule requires programs to consider the circumstances surrounding an individual's release in determining whether a participant served satisfactorily.

One commenter suggested that the Corporation's premise that the statute limits the ability of a participant to leave service either for cause or for compelling personal circumstances is erroneous because a participant may resign. The same commenter noted that a release ''for cause'' should be for reasons that are sufficient to warrant removal. While this interpretation of ''for cause'' is accurate in other legal contexts, it is used in our authorizing statute as one of two possible characterizations of a release for determining whether a participant may receive an education award. While participants may resign from service, each resignation must be characterized as a release for cause or for compelling personal circumstances in order to determine whether the participant will receive a portion of the education award. As stated above, a release ''for cause'' covers all circumstances that do not meet the definition of ''compelling personal circumstances,'' including some circumstances that would not necessarily warrant removal in another legal context.

*D. Living Allowance Disbursement (§ 2522.245)*

The Corporation is in the process of revising the AmeriCorps grant provisions and moving requirements with program-wide applicability to regulation. This final rule codifies the requirements previously articulated in the sub-regulatory grant provisions on how living allowances are to be treated and disbursed. There is no new requirement for how the living allowances must be disbursed; only the location of the requirement has changed.

The intent of this regulation is to ensure that the living allowance is distributed in a manner that fulfills its purpose. AmeriCorps participants are not employees of the programs with which they serve and the living allowance is not considered to be an hourly wage. Rather, the living allowance is intended to be a means to support participants' basic costs of living to ensure that they are able to secure food, clothing, and shelter while performing national service. For this reason, it is important that programs not treat the living allowance as a wage, and not adjust the distribution of the living allowance based on the number of hours a participant serves during a given period of time. For example, a participant who serves for 50 hours one week and 25 the next should receive the same living allowances as if the participant had served 50 hours (or 25 hours) in both weeks. Generally, the living allowance must not increase or decrease but should remain steady just as a participant's living expenses are continuous. However, because the living allowance is intended to support a participant's costs of living, if the cost of food, housing, transportation, or other necessities in a particular area increases, the program may adjust the living allowance accordingly within the overall approved grant amount.

Just as the amount of the living allowance should not fluctuate, the frequency of distribution of the living allowance should be steady and reliable. Programs must provide living allowances at regular intervals, such as weekly or bi-weekly, so that a participant can have regular access to financial support.

The final rule also codifies the existing policy prohibiting the payment of a ''lump sums'' to a participant who completes the term of service in a shorter period of time than originally anticipated. If a participant starts service later than other participants, the program may not pay the participant an additional sum to ''make up'' payments missed before the participant began. Likewise, if a participant completes the term of service ahead of schedule, the program may not pay the participant a lump sum equivalent to what the participant would have received.

*E. Waiver of Living Allowance by a Participant (§ 2522.240(b)(5))*

The Corporation's grant provisions have long provided that an AmeriCorps participant may waive all or part of the living allowance. The final rule adds this provision to regulation. A participant who waives the living allowance may revoke the waiver at any time and may begin receiving a living allowance again prospective from the date the waiver is revoked. The participant may not receive any part of the living allowance attributable to the time period during which the living allowance was waived.

*F. Applications for the Same Project (§ 2522.320)*

Section 130(g) of the Act states that ''the Corporation shall reject an application submitted under this section if a project proposed to be conducted using assistance requested by the applicant is already described in another application pending before the Corporation.''

Under the proposed rule, an organization submitting more than one application for the same project must disclose that fact in each application. If the Corporation approves one application for a project, the organization will be deemed to have withdrawn any other application for the same project. In addition, the proposed rule included characteristics that the Corporation will assess in determining whether two projects are the same for purposes of section 130(g).

One commenter expressed concern that the proposed rule would result in further concentration of funding to programs operated by National Direct grantees in large cities, thereby disadvantaging single-state, small non-profits, rural, and faith-based organizations. The Corporation does not agree that the rule will disadvantage single-state and local applicants. Such organizations are free to engage with State Commissions and National Direct grantees in developing programmatic collaborations. Moreover, States have the authority to choose not to put forward programs that could otherwise be funded through the National Direct competition, and the Corporation respects programmatic prerogatives of States.

The same commenter asserted that the proposed rule contradicts Section 130(g) of the Act. In particular, the commenter suggested that there is a contradiction between the language of section 130(g) and the proposed language describing the multiple applications as ''pending before the Corporation.'' We construe ''pending'' to mean the period of time between selection by the Corporation and execution of a grant award. To avoid confusion on this point, we have revised the language in the final rule to focus on the conditions placed on submission of an application.

To clarify the definition of ''same project,'' the final rule lists the characteristics the Corporation considers in determining whether two projects are the same. The Corporation will consider two projects to be the same for the purposes of Corporation funding if the Corporation cannot find a meaningful difference between the two projects based on a comparison of identifying characteristics. The Corporation may determine that two or more projects are sufficiently different based upon clear distinctions in one or more of the criteria considered. Notably, the characteristics listed in regulation are not exhaustive, as the Corporation may consider additional factors in determining a project's specific, identifiable activities.

For the purpose of determining whether two applications describe the same project, geographic location will be identified as narrowly as possible in order to specify the population served. For example, the operation of a homeless shelter in Brooklyn might—depending on the proposed activities and identifying characteristics—be considered a different project than the operation of a homeless shelter in the Bronx.

The proposed rule stated the Corporation would ''consider, among other characteristics: (a) The objectives and priorities of the project; (b) the nature of the service provided; (c) the program staff, volunteers, and participants involved; (d) the geographic location in which the service is provided; (e) the population served; and (f) the proposed community partnerships.''

One commenter noted that the language of the proposed rule was unclear, as it did not specify what the Corporation would do with the information considered. The Corporation agrees that the language was not specific, and has clarified the language in the final rule. The final rule reflects the Corporation's intent to compare identifying characteristics of the two projects to determine whether they are the same for the purposes of Corporation funding.

*G. Performance Measures (§ 2522.620)*

CNCS will continue to require each grantee to submit measures of outputs, intermediate outcomes, and end outcomes, all of which capture the results of its program's primary activity, in the application for funding. It will also continue to require grantees to report on outputs at the end of year one and outputs and intermediate outcomes at the end of years two and three.

Previously, CNCS also required grantees to report on end outcomes at the end of year three. Because end outcomes do not always become evident

until more than three years after the initial intervention, the final rule eliminates the requirement to report separately on end outcomes. The Corporation believes that there is significant value in having a grantee articulate an end outcome for at least one performance measure; end outcomes provide long-term context for the grantee's work. Additionally, the inclusion of end outcomes results in recompleting applications informs the competitive grant process.

*H. Civil Rights (§§ 2540.210 and 2540.215)*

The Corporation requires all recipients of Corporation grants to abide by applicable federal non-discrimination laws, including relevant provisions of the national service legislation, implementing regulations, and Corporation-distributed policies. It is essential that all participants, staff, and beneficiaries of programs supported by Corporation grants are aware of their rights under these laws and of the availability of the Corporation's impartial discrimination complaint process.

Previously, the Corporation's civil rights notification requirements were included in the annual grant provisions. The final rule has relocated these requirements to regulation. There is no change in the requirements, only in the location of the requirements.

The final rule requires grantees to notify participants, staff, and beneficiaries of the civil rights requirements and available complaint procedures by including this information in materials commonly distributed to members and potential members, including recruitment materials, member contracts, handbooks, manuals, pamphlets, and also by posting it in conspicuous locations, as appropriate. Grantees should ensure that this information is accessible to those participants, staff, and beneficiaries who have limited English proficiency, or who are hearing or visually impaired, by providing it in alternative formats when necessary.

Grantees may obtain sample notification language and other guidance on notification, the Corporation's discrimination complaint procedure, and other general information on prohibited discrimination by contacting the Corporation's Office of Civil Rights and Inclusiveness by mail at Office of Civil Rights and Inclusiveness, Corporation for National and Community Service, 1201 New York Ave., NW., Washington, DC 20525, by e-mail at *eo@cns.gov,* or by calling (202) 606–7503 or (202) 606–3472 (TTY).

*I. Use of National Service Insignia (§§ 2540.500–560)*

Currently, grant recipients and other entities engaged in providing national and community services in cooperation with the Corporation are approved to use the national service insignia in accordance with the terms and conditions of their agreements with the Corporation. The Corporation anticipates continuing to administer approvals to use the national service insignia in this manner.

From time to time, however, the Corporation's insignia, including the AmeriCorps logo and other logos associated with the Corporation's programs, have been used without authorization, including by individuals and entities having no relationship with the Corporation. In some cases, the unauthorized use was for commercial purposes that would not have been approved by the Corporation. To better protect the image and integrity of the Corporation's programs, ensure compliance with government-wide rules against improper endorsement of non-Federal entities, and protect the public from possible deception, the final rule adds a new subpart E to part 2540 of Title 45 of the Code of Federal Regulations. The rule provides notice regarding the restrictions on using the Corporation's various insignia and the possible civil and criminal penalties that may incur for unauthorized use of the insignia. Depending upon the nature of the violation, under section 425 of the Domestic Volunteer Service Act of 1973 and 18 U.S.C. 506, 701, and 1017, enforcement of the restriction could result in an injunction on the unauthorized use, a monetary fine, or imprisonment.

*J. Disqualification and Forfeiture Based on False or Misleading Statements (§§ 2540.600–670)*

The final rule adds a new subpart F to part 2540 to address individuals who are admitted to a program or who receive program benefits on the basis of false or misleading statements. Occasionally, a member or volunteer in a Corporation-funded program is discovered to have been admitted to the program or accorded a benefit from the program on the basis of false or misleading statements. The final rule provides a means for the Corporation to revoke the eligibility of a person for participation in or a benefit from a national service program if the person was admitted to a program or seeks a benefit from a program on the basis of a false or misleading statement.

In most cases the criteria for qualification to participate in a program or eligibility for a program benefit are set out in the NCSA or the Domestic Volunteer Service Act of 1973, or related appropriations acts. If it is discovered that facts connected to qualification to participate or eligibility for a benefit were false or misleading, the Corporation has an obligation to revoke the person's eligibility and refrain from providing a related benefit to that person. Additionally, the Corporation is legally obligated to recover funds from the person if funds were received on the basis of a false or misleading statement.

The final rule gives individuals suspected of making false or misleading statements the opportunity to respond under a two-tier review process before their eligibility is revoked. Where there are genuine facts in dispute, a telephonic or face-to-face meeting may be included in the second level of review.

The intent of the regulation is to provide a mechanism for revoking the eligibility of individuals who make a false or misleading statement in connection with their application to or enrollment in a national service program and for forfeiting eligibility for a related benefit.

The action and procedures set out in the final rule are intended to supplement, not replace, remedies against offending parties that are available under other laws. Depending upon the nature and scope of a false or misleading statement, other legal action may be taken against the offending party under the False Claims Act, Program Fraud Civil Remedies Act of 1986, Suspension and Debarment regulations under 2 CFR parts 180 and 2200, and other applicable laws and regulations.

One commenter noted that the Corporation included language in the preamble to the proposed rule regarding the materiality of the false or misleading statement, while the rule itself did not address materiality. We have removed any language regarding materiality in the preamble to maintain consistency with our rule language.

*K. Inspector General Access to Grantee Records (§ 2541.420)*

Section 2541.420(e) is amended to specifically add the Inspector General among the authorities having access to pertinent grantee records. While it has always been understood that the Office of the Inspector General is a component of the awarding agency, the rule is being amended to match the access to records

language in § 2543.53, which specifically names the Inspector General among the authorities having access to grantee records.

*L. State Commission Composition Requirements (§ 2550.50)*

Section 178(d)(1) of the Act states that ''the Chief Executive Officer of a State shall ensure, to the maximum extent practicable, that the membership for the State Commission for the State is diverse with respect to race, ethnicity, age, gender, and disability characteristics. Not more than 50 percent of the voting members, plus one additional member, may be from the same political party.'' Section 178(c)(5) of the Act states that ''[t]he number of voting members of a State Commission * * * who are officers or employees of the State may not exceed 25 percent * * * of the total membership of the State Commission.''

The final rule conforms 45 CFR 2550.50 to the specific language in the statute, including a clarification that the political affiliation provision applies only to voting members of the State Commission.

*M. State Plans (§§ 2550.80–85)*

Section 178(e) of the Act requires a State Commission to prepare and annually update a national service plan covering a three-year period. This Plan, previously referred to as a ''Unified State Plan,'' a ''State Service Plan,'' and, presently, a ''State Plan,'' is a document that sets forth the State's goals, priorities, and strategies for promoting national and community service. The Act specifies several components that must be present in the Plan, including the State's efforts to convene, collaborate, or otherwise coordinate with diverse national and community service groups and agencies to accomplish the State's national and community service goals.

The Act gives latitude to the Corporation to establish additional requirements for the contents of the State Plan. Over time, we have found that the State's submission of certain information is mutually beneficial. For example, to enhance communication and coordination between the Corporation and the State, it is useful for us to know how the State is utilizing statewide networks of national and community service groups to achieve its goals and priorities. In addition, the availability of such information serves as a resource for identifying best practices to be shared with other States. By including these elements with the description of a State Commission's duties we eliminated the need to publish State Plan requirements as a separate part; therefore, the final rule strikes part 2513 of Title 45.

Section 2550.80 lists the duties of State entities. The final rule conforms paragraph (a) of this section to the statutory list of responsibilities of State entities with regard to preparation of a State Plan. In addition, the final rule amends this section to include the requirement, previously located in part 2513, that the State Plan incorporate the State's ''goals, priorities, and strategies for promoting national and community service and strengthening its service infrastructure, including how Corporation-funded programs fit into the plan.'' This groups together relevant information and consolidates the regulatory required components of the State Plan. The final rule imposes no new requirements for the contents of the State Plan, while reserving the Corporation's right to request submission of the State Plan in its entirety, in sum, or in part.

The Corporation uses State Plans principally in understanding the State's national and community service goals, priorities, and strategies, not in making future funding decisions or monitoring determinations, risk-based assessments, or State Standards process evaluations.

## IV. Summary of Redesignations

The proposed rule will change the location of a number of regulations. The following table is a guide to the current location of a provision and its new location under the proposed rule.

| Current location | Proposed location |
|---|---|
| 2520.65(a)(9) | 2520.65(a)(10) |
| 2522.240(b)(5) | 2522.240(b)(6) |
| 2550.80(a)(3) | 2550.80(a)(4) |

## V. Effective Dates

This final rule will take effect November 17, 2008.

## VI. Rulemaking Analyses and Notices

*Regulatory Flexibility Act*

The Corporation has determined that the regulatory action will not result in (1) an annual effect on the economy of $100 million or more; (2) a major increase in costs or prices for consumers, individual industries, Federal, State, or local government agencies, or geographic regions; or (3) significant adverse effects on competition, employment, investment, productivity, innovation, or on the ability of United States-based enterprises to compete with foreign-based enterprises in domestic and export markets. Therefore, the Corporation has not performed the initial regulatory flexibility analysis that is required under the Regulatory Flexibility Act (5 U.S.C. 601 *et seq.*) for major rules that are expected to have such results.

*Other Impact Analyses*

Under the Paperwork Reduction Act, information collection requirements which must be imposed as a result of this regulation have been reviewed by the Office of Management and Budget under OMB nos. 3045–0047, 3045–0117, and 3045–0099.

For purposes of Title II of the Unfunded Mandates Reform Act of 1995, 2 U.S.C. 1531–1538, as well as Executive Order 12875, this regulatory action does not contain any Federal mandate that may result in increased expenditures in either Federal, State, local, or tribal governments in the aggregate, or impose an annual burden exceeding $100 million on the private sector.

**List of Subjects**

*45 CFR Part 2510*

Grant programs—social programs, Volunteers.

*45 CFR Part 2513*

Grant programs—social programs, Reporting and recordkeeping requirements, Volunteers.

*45 CFR Part 2516*

Grants administration, Grant programs—social programs.

*45 CFR Part 2517*

Grants administration, Grant programs—social programs.

*45 CFR Part 2520*

Grant programs—social programs, Volunteers.

*45 CFR Part 2521*

Grants administration, Grant programs—social programs.

*45 CFR Part 2522*

Grants administration, Grant programs—social programs, Volunteers.

*45 CFR Part 2523*

Grant programs—social programs.

*45 CFR Part 2540*

Civil rights, Fraud, Grants administration, Grant programs—social programs, Trademarks—signs and symbols, Trust, Volunteers.

*45 CFR Part 2541*

Grant programs—social programs, Reporting and recordkeeping requirements, Investigations.

*45 CFR Part 2550*

Grants administration, Grant programs—social programs.

■ For the reasons stated in the preamble, under the authority 42 U.S.C. 12651d, the Corporation for National and Community Service amends chapter XXV, title 45 of the Code of Federal Regulations as follows:

## PART 2510—OVERALL PURPOSES AND DEFINITIONS

■ 1. The authority citation for part 2510 continues to read as follows:

**Authority:** 42 U.S.C. 12501 *et seq.*

■ 2. Amend § 2510.20 by adding a new paragraph (3) to the definition of ''participant'' to read as follows:

### § 2510.20 Definitions.

* * * * *

*Participant.*

* * * * *

(3) A participant may also be referred to by the term *member*.

* * * * *

## PART 2513—[REMOVED]

■ 3. Remove and reserve part 2513.

## PART 2516—SCHOOL-BASED SERVICE-LEARNING PROGRAMS

■ 4. The authority citation for part 2516 is revised to read as follows:

**Authority:** 42 U.S.C. 12521–12551.

### § 2516.400 [Amended]

■ 5. Amend § 2516.400 introductory text by removing ''part 2513'' and adding ''§ 2550.80(a) of this chapter'' in its place.

### § 2516.410 [Amended]

■ 6. Amend § 2516.410(a)(1) by removing ''part 2513'' and adding ''§ 2550.80(a)'' in its place.

### § 2516.500 [Amended]

■ 7. Amend § 2516.500(a)(3)(i) by removing ''part 2513'' and adding ''§ 2550.80(a)'' in its place.

## PART 2517—COMMUNITY-BASED SERVICE-LEARNING PROGRAMS

■ 8. The authority citation for part 2517 is revised to read as follows:

**Authority:** 42 U.S.C. 12541–12547.

### § 2517.400 [Amended]

■ 9. Amend § 2517.400(a)(3) by removing ''part 2513'' and adding ''§ 2550.80(a)'' in its place.

### § 2517.500 [Amended]

■ 10. Amend § 2517.500(c)(3) by removing ''part 2513'' and adding ''§ 2550.80(a)'' in its place.

## PART 2520—GENERAL PROVISIONS: AMERICORPS SUBTITLE C PROGRAMS

■ 11. The authority citation for part 2520 continues to read as follows:

**Authority:** 42 U.S.C. 12571–12595.

■ 12. Amend § 2520.65 by redesignating paragraph (a)(9) as (a)(10) and adding a new paragraph (a)(9) to read as follows:

### § 2520.65 What activities are prohibited in AmeriCorps subtitle C programs?

(a) * * *

(9) Conducting a voter registration drive or using Corporation funds to conduct a voter registration drive;

* * * * *

## PART 2521—ELIGIBLE AMERICORPS SUBTITLE C PROGRAM APPLICANTS AND TYPES OF GRANTS AVAILABLE FOR AWARD

■ 13. The authority citation for part 2521 continues to read as follows:

**Authority:** 42 U.S.C. 12571–12595.

■ 14. In § 2521.30, revise paragraph (a)(4) to read as follows:

### § 2521.30 How will AmeriCorps subtitle C program grants be awarded?

* * * * *

(a) * * *

(4) In making subgrants with funds awarded by formula or competition under paragraphs (a)(2) or (3) of this section, a State must ensure that a minimum of 50 percent of funds going to States will be used for programs that operate in the areas of need or on Federal or other public lands, and that place a priority on recruiting participants who are residents in high need areas, or on Federal or other public lands. The Corporation may waive this requirement for an individual State if at least 50 percent of the total amount of assistance to all States will be used for such programs.

* * * * *

## PART 2522—AMERICORPS PARTICIPANTS, PROGRAMS, AND APPLICANTS

■ 15. The authority citation for part 2522 continues to read as follows:

**Authority:** 42 U.S.C. 12571–12595; 12651b–12651d; E.O. 13331, 69 FR 9911.

■ 16. Amend § 2522.220 by

■ a. Revising paragraph (a) introductory text and paragraph (d); and

■ b. Removing the phrase ''successfully-completed'' from paragraph (b).

The revisions will read as follows:

### § 2522.220 What are the required terms of service for AmeriCorps participants, and may they serve more than one term?

(a) *Term of Service.* A term of service may be defined as:

* * * * *

(d) *Participant evaluation.* For the purposes of determining a participant's eligibility for an educational award as described in § 2522.240(a) and eligibility to serve a second or additional term of service as described in paragraph (c) of this section, each AmeriCorps grantee is responsible for conducting a mid-term and end-of-term evaluation. A mid-term evaluation is not required for a participant who is released early from a term of service or in other circumstances as approved by the Corporation. The end-of-term evaluation should consist of:

(1) A determination of whether the participant:

(i) Successfully completed the required term of service described in paragraph (a) of this section, making the participant eligible for an educational award as described in § 2522.240(a);

(ii) Was released from service for compelling personal circumstances, making the participant eligible for a pro-rated educational award as described in § 2522.230(a)(2); or

(iii) Was released from service for cause, making the participant ineligible to receive an educational award for that term of service as described in § 2522.230(b)(3); and

(2) A participant performance and conduct review to determine whether the participant's service was satisfactory, which will assess whether the participant:

(i) Has satisfactorily completed assignments, tasks, or projects, or, for those participants released from service early, whether the participant made a satisfactory effort to complete those assignments, tasks, or projects that the participant could reasonably have addressed in the time the participant served; and

(ii) Has met any other criteria which had been clearly communicated both orally and in writing at the beginning of the term of service.

* * * * *

■ 17. Amend § 2522.230 by adding new paragraphs (b)(6), (b)(7), and (e) to read as follows:

**§ 2522.230 Under what circumstances may AmeriCorps participants be released from completing a term of service, and what are the consequences?**

* * * * *

(b) * * *

(6) An individual's eligibility for a second term of service in AmeriCorps will not be affected by release for cause from a prior term of service so long as the individual received a satisfactory end-of-term performance review as described in § 2522.240(d)(2) for the period served in the first term.

(7) Except as provided in paragraph (e) of this section, a term of service from which an individual is released for cause counts as one of the two terms of service described in § 2522.220(b) for which an individual may receive the benefits described in §§ 2522.240 through 2522.250.

* * * * *

(e) *Release prior to serving 15 percent of a term of service.* If a participant is released for reasons other than misconduct prior to completing 15 percent of a term of service, the term will not be considered one of the two terms of service described in § 2522.220(b) for which an individual may receive the benefits described in §§ 2522.240 through 2522.250.

■ 18. Amend § 2522.240 by:

■ a. Revising the heading of paragraph (b)(4);

■ b. Redesignating paragraph (b)(5) as (b)(6); and

■ c. Adding a new paragraph (b)(5).

The revisions and additions will read as follows:

**§ 2522.240 What financial benefits do AmeriCorps participants serving in approved AmeriCorps positions receive?**

* * * * *

(b) * * *

(4) *Waiver or reduction of living allowance for programs.* * * *

(5) *Waiver or reduction of living allowance by participants.* A participant may waive all or part of the receipt of a living allowance. The participant may revoke this waiver at any time during the participant's term of service. If the participant revokes the living allowance waiver, the participant may begin receiving his or her living allowance prospective from the date of the revocation; a participant may not receive any portion of the living allowance that may have accrued during the waiver period.

* * * * *

■ 19. Add a new § 2522.245 to read as follows:

**§ 2522.245 How are living allowances disbursed?**

A living allowance is not a wage and programs may not pay living allowances on an hourly basis. Programs must distribute the living allowance at regular intervals and in regular increments, and may increase living allowance payments only on the basis of increased living expenses such as food, housing, or transportation. Living allowance payments may only be made to a participant during the participant's term of service and must cease when the participant concludes the term of service. Programs may not provide a lump sum payment to a participant who completes the originally agreed-upon term of service in a shorter period of time.

■ 20. Revise § 2522.320 to read as follows:

**§ 2522.320 Under what conditions may I submit more than one application for the same project?**

You may submit more than one application for the same project only if:

(a) You submit the applications in separate competitions (i.e., National Direct, State, Education Award Program); and

(b) You disclose in each application that you have submitted another application for the same project to the Corporation.

■ 21. Add new §§ 2522.330 and 2522.340 to subpart C to read as follows:

**§ 2522.330 What happens to additional applications for the same project if the Corporation approves one application?**

If the Corporation approves one application for a project, you will be deemed to have withdrawn any other application (or part thereof) for the same project.

**§ 2522.340 How will I know if two projects are the same?**

The Corporation will consider two projects to be the same if the Corporation cannot identify a meaningful difference between the two projects based on a comparison of the following characteristics, among others:

(a) The objectives and priorities of the projects;

(b) The nature of the services provided;

(c) The program staff, participants, and volunteers involved;

(d) The geographic locations in which the services are provided;

(e) The populations served; and

(f) The proposed community partnerships.

■ 22. Amend § 2522.620 by revising paragraph (c) to read as follows:

**§ 2522.620 How do I report my performance measures to the Corporation?**

* * * * *

(c) At a minimum you are required to report on outputs at the end of year one and outputs and intermediate outcomes at the end of years two and three. We encourage you to exceed these minimum requirements.

## PART 2523—AGREEMENTS WITH OTHER FEDERAL AGENCIES FOR THE PROVISION OF AMERICORPS PROGRAM ASSISTANCE

■ 23. The authority citation for part 2523 is revised to read as follows:

**Authority:** 42 U.S.C. 12571–12595.

**§ 2523.90 [Amended]**

■ 24. Amend § 2523.90 by removing ''§ 2522.240(b)(5)'' and adding ''§ 2522.240(b)(6)'' in its place.

## PART 2524—AMERICORPS TECHNICAL ASSISTANCE AND OTHER SPECIAL GRANTS

■ 25. The authority citation for part 2524 is revised to read as follows:

**Authority:** 42 U.S.C. 12571–12595.

**§ 2524.30 [Amended]**

■ 26. Amend § 2524.30(b)(4) by removing ''2522.240(b)(5)'' and adding ''2522.240(b)(6)'' in its place.

## PART 2540—GENERAL ADMINISTRATIVE PROVISIONS

■ 27. The authority citation for part 2540 is revised to read as follows:

**Authority:** E.O. 13331, 69 FR 9911; 18 U.S.C. 506, 701, 1017; 42 U.S.C. 12653; 42 U.S.C. 5065.

■ 28. Amend § 2540.210 by adding a new paragraph (d) to read as follows:

**§ 2540.210 What provisions exist to ensure that Corporation-supported programs do not discriminate in the selection of participants and staff?**

* * * * *

(d) Grantees must notify all program participants, staff, applicants, and beneficiaries of:

(1) Their rights under applicable federal nondiscrimination laws, including relevant provisions of the national service legislation and implementing regulations; and

(2) The procedure for filing a discrimination complaint with the Corporation's Office of Civil Rights and Inclusiveness.

■ 29. Add a new § 2540.215 to read as follows:

**§ 2540.215 What should a program participant, staff members, or beneficiary do if the individual believes he or she has been subject to illegal discrimination?**

A program participant, staff member, or beneficiary who believes that he or she has been subject to illegal discrimination should contact the Corporation's Office of Civil Rights and Inclusiveness, which offers an impartial discrimination complaint resolution process. Participation in a discrimination complaint resolution process is protected activity; a grantee is prohibited from retaliating against an individual for making a complaint or participating in any manner in an investigation, proceeding, or hearing.

■ 30. Add a new Subpart E (consisting of §§ 2540.500 through 2540.560) to read as follows:

**Subpart E—Restrictions on Use of National Service Insignia**

Sec.

2540.500 What definition applies to this subpart?
2540.510 What are the restrictions on using national service insignia?
2540.520 What are the consequences for unauthorized use of the Corporation's national service insignia?
2540.530 Are there instances where an insignia may be used without getting the approval of the Corporation?
2540.540 Who has authority to approve use of national service insignia?
2540.550 Is there an expiration date on approvals for use of national service insignia?
2540.560 How do I renew authority to use a national service insignia?

## Subpart E—Restrictions on Use of National Service Insignia

**§ 2540.500 What definition applies to this subpart?**

*National Service Insignia.* For this subpart, *national service insignia* means the former and current seal, logos, names, or symbols of the Corporation's programs, products, or services, including those for AmeriCorps, VISTA, Learn and Serve America, Senior Corps, Foster Grandparents, the Senior Companion Program, the Retired and Senior Volunteer Program, the National Civilian Community Corps, and any other program or project that the Corporation administers.

**§ 2540.510 What are the restrictions on using national service insignia?**

The national service insignia are owned by the Corporation and only may be used as authorized. The national service insignia may not be used by non-federal entities for fundraising purposes or in a manner that suggests Corporation endorsement.

**§ 2540.520 What are the consequences for unauthorized use of the Corporation's national service insignia?**

Any person who uses the national service insignia without authorization may be subject to legal action for trademark infringement, enjoined from continued use, and, for certain types of unauthorized uses, other civil or criminal penalties may apply.

**§ 2540.530 Are there instances where an insignia may be used without getting the approval of the Corporation?**

All uses of the national service insignia require the written approval of the Corporation.

**§ 2540.540 Who has authority to approve use of national service insignia?**

Approval for limited uses may be provided through the terms of a written grant or other agreement. All other uses must be approved in writing by the director of the Corporation's Office of Public Affairs, or his or her designee.

**§ 2540.550 Is there an expiration date on approvals for use of national service insignia?**

The approval to use a national service insignia will expire as determined in writing by the director of the Office of Public Affairs, or his or her designee. However, the authority to use an insignia may be revoked at any time if the Corporation determines that the use involved is injurious to the image of the Corporation or if there is a failure to comply with the terms and conditions of the authorization.

**§ 2540.560 How do I renew authority to use a national service insignia?**

Requests for renewed authority to use an insignia must follow the procedures for initial approval as set out in § 2540.540.

■ 31. Add a new Subpart F (consisting of §§ 2540.600 through 2540.670) to read as follows:

**Subpart F—False or Misleading Statements**

Sec.

2540.600 What definitions apply to this subpart?
2540.610 What are the consequences of making a false or misleading statement?
2540.620 What are my rights if the Corporation determines that I have made a false or misleading statement?
2540.630 What information must I provide to contest a proposed action?
2540.640 When will the reviewing official make a decision on the proposed action?
2540.650 How may I contest a reviewing official's decision to uphold the proposed action?
2540.660 If the final decision determines that I received a financial benefit improperly, will I be required to repay that benefit?
2540.670 Will my qualification to participate or eligibility for benefits be suspended during the review process?

## Subpart F—False or Misleading Statements

**§ 2540.600 What definitions apply to this subpart?**

*You.* For this subpart, *you* refers to a participant in a national service program.

**§ 2540.610 What are the consequences of making a false or misleading statement?**

If it is determined that you made a false or misleading statement in connection with your eligibility for a benefit from, or qualification to participate in, a Corporation-funded program, it may result in the revocation of the qualification or forfeiture of the benefit. Revocation and forfeiture under this part are in addition to any other remedy available to the Federal Government under the law against persons who make false or misleading statements in connection with a Federally-funded program.

**§ 2540.620 What are my rights if the Corporation determines that I have made a false or misleading statement?**

If the Corporation determines that you have made a false or misleading statement in connection with your eligibility for a benefit from, or qualification to participate in, a Corporation-funded program, you will be hand delivered a written notice, or sent a written notice to your last known street address or e-mail address or that of your identified counsel at least 15 days before any proposed action is taken. The notice will include the facts surrounding the determination and the action the Corporation proposes to take. The notice will also identify the reviewing official in your case and provide other pertinent information. You will be allowed to show good cause as to why forfeiture, revocation, the denial of a benefit, or other action should not be implemented. You will be given 10 calendar days to submit written materials in opposition to the proposed action.

**§ 2540.630 What information must I provide to contest a proposed action?**

Your written response must include specific facts that contradict the statements made in the notice of proposed action. A general statement of denial is insufficient to raise a dispute over the facts material to the proposed action. Your response should also include copies of any documents that support your argument.

**§ 2540.640 When will the reviewing official make a decision on the proposed action?**

The reviewing official will issue a decision within 45 days of receipt of your response.

**§ 2540.650 How may I contest a reviewing official's decision to uphold the proposed action?**

If the Corporation's reviewing official concludes that the proposed action, in full or in part, should still be implemented, you will have an opportunity to request an additional proceeding. A Corporation program director or designee will conduct a review of the complete record, including such additional relevant documents you submit. If deemed appropriate, such as where there are material facts in genuine dispute, the program director or designee may conduct a telephonic or in person meeting. If a meeting is conducted, it will be recorded and you will be provided a copy of the recording. The program director or designee will issue a decision within 30 days of the conclusion of the review of the record or meeting. The decision of the program director or designee is final and cannot be appealed further within the agency.

**§ 2540.660 If the final decision determines that I received a financial benefit improperly, will I be required to repay that benefit?**

If it is determined that you received a financial benefit improperly, you may be required to reimburse the program for that benefit.

**§ 2540.670 Will my qualification to participate or eligibility for benefits be suspended during the review process?**

If the reviewing official determines that, based on the information available, there is a reasonable likelihood that you will be determined disqualified or ineligible, your qualification or eligibility may be suspended, pending issuance of a final decision, to protect the public interest.

## PART 2541—UNIFORM ADMINISTRATIVE REQUIREMENTS FOR GRANTS AND COOPERATIVE AGREEMENTS TO STATE AND LOCAL GOVERNMENTS

■ 32. The authority citation for part 2541 continues to read as follows:

**Authority:** 42 U.S.C. 4950 *et seq.* and 12501 *et seq.*

■ 33. Amend § 2541.420 by revising paragraph (e)(1) to read as follows:

**§ 2541.420 Retention and access requirements for records.**

* * * * *

(e) Access to records.—(1) Records of grantees and subgrantees. The awarding agency, the Inspector General, and the Comptroller General of the United States, or any of their authorized representatives, shall have the right of access to any pertinent books, documents, papers, or other records of grantees and subgrantees which are pertinent to the grant, in order to make audits, examinations, excerpts, and transcripts.

* * * * *

## PART 2550—REQUIREMENTS AND GENERAL PROVISIONS FOR STATE COMMISSIONS AND ALTERNATIVE ADMINISTRATIVE ENTITIES

■ 34. The authority citation for part 2550 continues to read as follows:

**Authority:** 42 U.S.C. 12638.

■ 35. Amend § 2550.50 by revising paragraph (e) to read as follows:

**§ 2550.50 What are the composition requirements and other requirements, restrictions or guidelines for State Commissions?**

* * * * *

(e) *Other composition requirements.* To the extent practicable, the chief executive officer of a State shall ensure that the membership for the State commission is diverse with respect to race, ethnicity, age, gender, and disability characteristics. Not more than 50 percent plus one of the voting members of a State commission may be from the same political party. In addition, the number of voting members of a State commission who are officers or employees of the State may not exceed 25% of the total membership of that State commission.

* * * * *

■ 36. Amend § 2550.80 by revising paragraph (a) to read as follows:

**§ 2550.80 What are the duties of the State entities?**

* * * * *

(a) *Development of a three-year, comprehensive national and community service plan and establishment of State priorities.* The State entity must develop and annually update a Statewide plan for national service covering a three-year period that is consistent with the Corporation's broad goals of meeting human, educational, environmental, and public safety needs and meets the following minimum requirements:

(1) The plan must be developed through an open and public process (such as through regional forums or hearings) that provides for the maximum participation and input from a broad cross-section of individuals and organizations, including national service programs within the State, community-based agencies, organizations with a demonstrated record of providing educational, public safety, human, or environmental services, residents of the State, including youth and other prospective participants, State Educational Agencies, traditional service organizations, labor unions, and other interested members of the public.

(2) The plan must ensure outreach to diverse, broad-based community organizations that serve underrepresented populations by creating State networks and registries or by utilizing existing ones.

(3) The plan must set forth the State's goals, priorities, and strategies for promoting national and community service and strengthening its service infrastructure, including how Corporation-funded programs fit into the plan.

(4) The plan may contain such other information as the State commission considers appropriate and must contain such other information as the Corporation may require.

(5) The plan must be submitted, in its entirety, in summary, or in part, to the Corporation upon request.

* * * * *

■ 37. Add a new § 2550.85 to read as follows:

**§ 2550.85 How will the State Plan be assessed?**

The Corporation will assess the quality of your State Plan as evidenced by:

(a) The development and quality of realistic goals and objectives for moving service ahead in the State;

(b) The extent to which proposed strategies can reasonably be expected to accomplish stated goals; and

(c) The extent of input in the development of the State plan from a broad cross-section of individuals and organizations as required by § 2550.80(a)(1).

Dated: September 10, 2008.

**Frank R. Trinity,**

*General Counsel.*

[FR Doc. E8–21634 Filed 9–16–08; 8:45 am]

BILLING CODE 6050–$$–P

**DEPARTMENT OF COMMERCE**

**National Oceanic and Atmospheric Administration**

**50 CFR Part 660**

**[Docket No. 080408542–8615–01]**

**RIN 0648–XK03**

## Fisheries off West Coast States; Pacific Coast Groundfish Fishery; End of the Pacific Whiting Primary Season for the Catcher-processor, Mothership and Shore-based Sectors

**AGENCY:** National Marine Fisheries Service (NMFS), National Oceanic and Atmospheric Administration (NOAA), Commerce.

**ACTION:** Fishing restrictions; request for comments.

**SUMMARY:** To minimize impacts on canary rockfish, NMFS announces the end of the 2008 Pacific whiting primary season for the catcher-processor, mothership and shore-based sectors at noon local time (l.t.) August 19, 2008. This action is intended to keep the harvest of canary rockfish, an overfished species, within its 2008 optimum yield (OY).

**DATES:** Effective from noon l.t. August 19 2008, until the start of the 2009 primary seasons, unless modified, superseded or rescinded.

**FOR FURTHER INFORMATION CONTACT:** Becky Renko, Office of Sustainable Fisheries, Northwest Region, NMFS, 7600 Sand Point Way NE, Seattle, WA 98115 0070; tel: 206–526–6110; fax: 206–526–6736; or, e-mail: *becky.renko@noaa.gov*.

**SUPPLEMENTARY INFORMATION:** This action is authorized by regulations implementing the Pacific Coast Groundfish Fishery Management Plan (FMP), which governs the groundfish fishery off Washington, Oregon, and California.

The 2008 non-tribal commercial OY for whiting is 232,545 mt. Regulations at 50 CFR 660.323(a)(4) divide the commercial whiting OY into separate allocations for the catcher-processor, mothership, and shore-based sectors. The catcher-processor sector is composed of vessels that harvest and process whiting. The mothership sector is composed of catcher vessels that harvest whiting and mothership vessels that process, but do not harvest whiting. The shore-based sector is composed of vessels that harvest whiting for delivery to land-based processors. Each commercial sector is allocated a portion of the commercial OY. For 2008 the catcher-processors received 34 percent (79,065 mt), motherships received 24 percent (55,811 mt), and the shore-based sector received 42 percent (97,669 mt) (73 FR 26325; May 9, 2008).

### Overfished Species

The limited availability of overfished species that can be taken as incidental catch in the whiting fisheries, particularly canary, darkblotched and widow rockfish, led NMFS to implement bycatch limits for those species. With bycatch limits, the industry has the opportunity to harvest a larger whiting OY, providing the incidental catch of overfished species does not exceed the adopted bycatch limits. If a bycatch limit is reached, all non-tribal sectors of the whiting fishery are closed for the remainder of the year. For 2008, the following bycatch limits were specified for the non-tribal whiting sectors: 4.7 mt for canary rockfish, 40 mt for darkblotched rockfish, and 275 mt for widow rockfish.

The best available information as of August 18, 2008, indicated that the canary rockfish bycatch limit was reached. Accoringly, the primary seasons for the catcher/processors sector, mothership sector and the shore-based sectors was ended at noon l.t. August 19, 2008, through actual notice to the fishery participants. Actual notice was provided by facsimile on August 18th. The closure announcement was also posted on the NWR internet site for the Pacific whiting fishery.

### NMFS Action

This notice announces that the primary seasons for the catcher-processor sector, mothership sector and the shore-based sectors of the whiting fishery, were ended on August 19, 2008 because the best available information indicated that 4.7 mt of canary rockfish had been taken in the non-tribal whiting fisheries. For the reasons stated here and in accordance with the regulations at 50 CFR 660.373(b) and 50 CFR 660.232(b), NMFS herein announces that effective noon l.t. August 19, 2008: (1) further taking and retaining, receiving or at-sea processing of whiting by a catcher-processor is prohibited; (2) Further receiving or at-sea processing of whiting by a mothership is prohibited and no additional unprocessed whiting may be brought on board after at-sea processing is prohibited, and (3) no more than 10,000-lb (4,536 kg) per trip of whiting may be taken and retained, possessed or landed by any vessel participating in the shore-based sector of the whiting fishery, unless otherwise announced in the Federal Register. For vessels in the at-sea processing sectors, no additional unprocessed whiting may be brought on board after at-sea processing is prohibited, but a catcher-processor or mothership may continue to process whiting that was on board before at-sea processing was prohibited. For vessels in the shore-based sector fishing shoreward of the 100 fm (183 m) contour in the Eureka area (43°-40°30′ N. lat.) at any time during a fishing trip, the 10,000-lb (4,536 kg) trip limit applies, as announced in the management measures in § 660.373 (d).

### Classification

This action is authorized by the regulations implementing the FMP. The determination to take this action is based on the most recent data available. The Assistant Administrator for Fisheries, NMFS, finds good cause to waive the requirement to provide prior notice and opportunity for comment on this action pursuant to 5 U.S.C. 553 (3)(b)(B), because providing prior notice and opportunity would be impracticable. It would be impracticable because if this closure were delayed in order to provide notice and comment, the catch of canary rockfish would be expected to result in the rebuilding-based OY being exceeded. The delay needed to provide a cooling off period also would be expected to result in the rebuilding-based OY for canary rockfish being exceeded. Therefore, good cause also exists to waive the 30-day delay in effectiveness requirement of 5 U.S.C. 553 (d)(3). The aggregate data upon which the determination is based are available for public inspection at the Office of Sustainable Fisheries during business hours. This action is taken under the authority of 50 CFR 660.373 (b) and 50 CFR 660.232(b)and is exempt from review under E.O. 12866.

**Authority:** 16 U.S.C. 1801 et seq.

Dated: September 9, 2008.

**James P. Burgess,**

*Acting Director, Office of Sustainable Fisheries, National Marine Fisheries Service.*

[FR Doc. E8–21744 Filed 9–16–08; 8:45 am]

BILLING CODE 3510–22–S

# Proposed Rules

Federal Register

Vol. 73, No. 181

Wednesday, September 17, 2008

This section of the FEDERAL REGISTER contains notices to the public of the proposed issuance of rules and regulations. The purpose of these notices is to give interested persons an opportunity to participate in the rule making prior to the adoption of the final rules.

## DEPARTMENT OF TRANSPORTATION

### Federal Aviation Administration

### 14 CFR Part 39

**[Docket No. FAA–2008–0990; Directorate Identifier 2008–CE–060–AD]**

**RIN 2120–AA64**

## Airworthiness Directives; Pilatus Aircraft Ltd. Model PC–6 Series Airplanes

**AGENCY:** Federal Aviation Administration (FAA), Department of Transportation (DOT).

**ACTION:** Notice of proposed rulemaking (NPRM).

**SUMMARY:** We propose to adopt a new airworthiness directive (AD) for the products listed above. This proposed AD results from mandatory continuing airworthiness information (MCAI) originated by an aviation authority of another country to identify and correct an unsafe condition on an aviation product. The MCAI describes the unsafe condition as:

This Airworthiness Directive (AD) is prompted by a potential problem with the freedom of the brake pedals of some PC–6 series aircraft.

The freedom of the brake pedals could be prevented because of an insufficient clearance between the rudder bar lugs on a few aircraft. In such conditions, it is possible that the master brake cylinder is not re-filled with the fluid from the reservoir, which can lead to a degradation of brake effectiveness. Mostly during landing, this can lead to difficulties with the directional control of the aircraft on ground and could cause a runway excursion.

The proposed AD would require actions that are intended to address the unsafe condition described in the MCAI.

**DATES:** We must receive comments on this proposed AD by October 17, 2008.

**ADDRESSES:** You may send comments by any of the following methods:

- *Federal eRulemaking Portal:* Go to *http://www.regulations.gov.* Follow the instructions for submitting comments.
- *Fax:* (202) 493–2251.
- *Mail:* U.S. Department of Transportation, Docket Operations, M–30, West Building Ground Floor, Room W12–140, 1200 New Jersey Avenue, SE., Washington, DC 20590.
- *Hand Delivery:* U.S. Department of Transportation, Docket Operations, M–30, West Building Ground Floor, Room W12–140, 1200 New Jersey Avenue, SE., Washington, DC 20590, between 9 a.m. and 5 p.m., Monday through Friday, except Federal holidays.

### Examining the AD Docket

You may examine the AD docket on the Internet at *http://www.regulations.gov;* or in person at the Docket Management Facility between 9 a.m. and 5 p.m., Monday through Friday, except Federal holidays. The AD docket contains this proposed AD, the regulatory evaluation, any comments received, and other information. The street address for the Docket Office (telephone (800) 647–5527) is in the **ADDRESSES** section. Comments will be available in the AD docket shortly after receipt.

**FOR FURTHER INFORMATION CONTACT:** Doug Rudolph, Aerospace Engineer, FAA, Small Airplane Directorate, 901 Locust, Room 301, Kansas City, Missouri 64106; telephone: (816) 329–4059; fax: (816) 329–4090.

**SUPPLEMENTARY INFORMATION:**

### Comments Invited

We invite you to send any written relevant data, views, or arguments about this proposed AD. Send your comments to an address listed under the **ADDRESSES** section. Include ''Docket No. FAA–2008–0990; Directorate Identifier 2008–CE–060–AD'' at the beginning of your comments. We specifically invite comments on the overall regulatory, economic, environmental, and energy aspects of this proposed AD. We will consider all comments received by the closing date and may amend this proposed AD because of those comments.

We will post all comments we receive, without change, to *http://www.regulations.gov,* including any personal information you provide. We will also post a report summarizing each substantive verbal contact we receive about this proposed AD.

### Discussion

The European Aviation Safety Agency (EASA), which is the Technical Agent for the Member States of the European Community, has issued AD No.: 2008–0171, dated September 9, 2008 (referred to after this as ''the MCAI''), to correct an unsafe condition for the specified products. The MCAI states:

This Airworthiness Directive (AD) is prompted by a potential problem with the freedom of the brake pedals of some PC–6 series aircraft.

The freedom of the brake pedals could be prevented because of an insufficient clearance between the rudder bar lugs on a few aircraft. In such conditions, it is possible that the master brake cylinder is not re-filled with the fluid from the reservoir, which can lead to a degradation of brake effectiveness. Mostly during landing, this can lead to difficulties with the directional control of the aircraft on ground and could cause a runway excursion.

For the reason stated above, the present Airworthiness Directive mandates a check of the brake pedals for full and free movement and, if any damage is found, the modification of the brake pedals to restore their freedom.

You may obtain further information by examining the MCAI in the AD docket.

### Relevant Service Information

Pilatus Aircraft Ltd. has issued Pilatus PC–6 Service Bulletin No. 32–002, Revision 2, dated April 29, 2008. The actions described in this service information are intended to correct the unsafe condition identified in the MCAI.

### FAA's Determination and Requirements of the Proposed AD

This product has been approved by the aviation authority of another country, and is approved for operation in the United States. Pursuant to our bilateral agreement with this State of Design Authority, they have notified us of the unsafe condition described in the MCAI and service information referenced above. We are proposing this AD because we evaluated all information and determined the unsafe condition exists and is likely to exist or develop on other products of the same type design.

### Differences Between This Proposed AD and the MCAI or Service Information

We have reviewed the MCAI and related service information and, in general, agree with their substance. But we might have found it necessary to use

different words from those in the MCAI to ensure the AD is clear for U.S. operators and is enforceable. In making these changes, we do not intend to differ substantively from the information provided in the MCAI and related service information.

We might also have proposed different actions in this AD from those in the MCAI in order to follow FAA policies. Any such differences are highlighted in a Note within the proposed AD.

### Costs of Compliance

We estimate that this proposed AD will affect 50 products of U.S. registry. We also estimate that it would take about 2 work-hours per product to comply with the basic requirements of this proposed AD. The average labor rate is $80 per work-hour.

Based on these figures, we estimate the cost of the proposed AD on U.S. operators to be $8,000, or $160 per product.

In addition, we estimate that any necessary follow-on actions would take about 10 work-hours and require parts costing $100, for a cost of $900 per product. We have no way of determining the number of products that may need these actions.

### Authority for This Rulemaking

Title 49 of the United States Code specifies the FAA's authority to issue rules on aviation safety. Subtitle I, section 106, describes the authority of the FAA Administrator. ''Subtitle VII: Aviation Programs,'' describes in more detail the scope of the Agency's authority.

We are issuing this rulemaking under the authority described in ''Subtitle VII, Part A, Subpart III, Section 44701: General requirements.'' Under that section, Congress charges the FAA with promoting safe flight of civil aircraft in air commerce by prescribing regulations for practices, methods, and procedures the Administrator finds necessary for safety in air commerce. This regulation is within the scope of that authority because it addresses an unsafe condition that is likely to exist or develop on products identified in this rulemaking action.

### Regulatory Findings

We determined that this proposed AD would not have federalism implications under Executive Order 13132. This proposed AD would not have a substantial direct effect on the States, on the relationship between the national Government and the States, or on the distribution of power and responsibilities among the various levels of government.

*For the reasons discussed above, I certify this proposed regulation:*

1. Is not a ''significant regulatory action'' under Executive Order 12866;
2. Is not a ''significant rule'' under the DOT Regulatory Policies and Procedures (44 FR 11034, February 26, 1979); and
3. Will not have a significant economic impact, positive or negative, on a substantial number of small entities under the criteria of the Regulatory Flexibility Act.

We prepared a regulatory evaluation of the estimated costs to comply with this proposed AD and placed it in the AD docket.

### List of Subjects in 14 CFR Part 39

Air transportation, Aircraft, Aviation safety, Safety.

### The Proposed Amendment

Accordingly, under the authority delegated to me by the Administrator, the FAA proposes to amend 14 CFR part 39 as follows:

## PART 39—AIRWORTHINESS DIRECTIVES

1. The authority citation for part 39 continues to read as follows:

**Authority:** 49 U.S.C. 106(g), 40113, 44701.

### § 39.13 [Amended]

2. The FAA amends § 39.13 by adding the following new AD:

**Pilatus Aircraft Ltd.:** Docket No. FAA–2008–0990; Directorate Identifier 2008–CE–060–AD.

#### Comments Due Date

(a) We must receive comments by October 17, 2008.

#### Affected ADs

(b) None.

#### Applicability

(c) This AD applies to Models PC–6, PC–6–H1, PC–6–H2, PC–6/350, PC–6/350–H1, PC–6/350–H2, PC–6/A, PC–6/A–H1, PC–6/A–H2, PC–6/B–H2, PC–6/B1–H2, PC–6/B2–H2, PC–6/B2–H4, PC–6/C–H2, and PC–6/C1–H2 airplanes, manufacturer serial numbers (MSN) 101 through 950 and MSN 2001 through 2092, certificated in any category.

**Note 1:** These airplanes may also be identified as Fairchild Republic Company PC–6 airplanes, Fairchild Industries PC–6 airplanes, Fairchild Heli Porter PC–6 airplanes, or Fairchild-Hiller Corporation PC–6 airplanes.

#### Subject

(d) Air Transport Association of America (ATA) Code 32: Landing Gear.

#### Reason

(e) The mandatory continuing airworthiness information (MCAI) states:

This Airworthiness Directive (AD) is prompted by a potential problem with the freedom of the brake pedals of some PC–6 series aircraft.

The freedom of the brake pedals could be prevented because of an insufficient clearance between the rudder bar lugs on a few aircraft. In such conditions, it is possible that the master brake cylinder is not re-filled with the fluid from the reservoir, which can lead to a degradation of brake effectiveness. Mostly during landing, this can lead to difficulties with the directional control of the aircraft on ground and could cause a runway excursion.

For the reason stated above, the present Airworthiness Directive mandates a check of the brake pedals for full and free movement and, if any damage is found, the modification of the brake pedals to restore their freedom.

#### Actions and Compliance

(f) Unless already done, do the following actions:

(1) Inspect the brake pedals for full and free movement within 100 hours time-in-service after the effective date of this AD or 12 months after the effective date of this AD, whichever occurs first, following the accomplishment instructions of Pilatus Aircraft Ltd. Pilatus PC–6 Service Bulletin No. 32–002, Revision 2, dated April 29, 2008.

(2) If as a result of the inspection required by paragraph (f)(1) of this AD any stiffness or limited movement of a brake pedal is found, before further flight, perform the corrective actions in accordance with the paragraph 3.C. of the accomplishment instructions of Pilatus Aircraft Ltd. Pilatus PC–6 Service Bulletin No. 32–002, Revision 2, dated April 29, 2008.

(3) As of the effective date of this AD, do not install any pilot or co-pilot rudder pedal assembly Part Number (P/N) 6232.0011.00, P/N 6232.0255.52, P/N 116.35.06.050, P/N 116.35.06.053, or P/N 116.35.06.054 unless it has been inspected and modified as applicable in accordance with paragraphs (f)(1) and (f)(2) of this AD.

#### FAA AD Differences

**Note 2:** This AD differs from the MCAI and/or service information as follows: No differences.

#### Other FAA AD Provisions

(g) The following provisions also apply to this AD:

*(1) Alternative Methods of Compliance (AMOCs):* The Manager, Standards Office, FAA, has the authority to approve AMOCs for this AD, if requested using the procedures found in 14 CFR 39.19. Send information to ATTN: Doug Rudolph, Aerospace Engineer, FAA, Small Airplane Directorate, 901 Locust, Room 301, Kansas City, Missouri 64106; telephone: (816) 329–4059; fax: (816) 329–4090. Before using any approved AMOC on any airplane to which the AMOC applies, notify your appropriate principal inspector (PI) in the FAA Flight Standards District Office (FSDO), or lacking a PI, your local FSDO.

*(2) Airworthy Product:* For any requirement in this AD to obtain corrective actions from a manufacturer or other source, use these actions if they are FAA-approved. Corrective

actions are considered FAA-approved if they are approved by the State of Design Authority (or their delegated agent). You are required to assure the product is airworthy before it is returned to service.

*(3) Reporting Requirements:* For any reporting requirement in this AD, under the provisions of the Paperwork Reduction Act (44 U.S.C. 3501 et seq.), the Office of Management and Budget (OMB) has approved the information collection requirements and has assigned OMB Control Number 2120–0056.

**Related Information**

(h) Refer to MCAI European Aviation Safety Agency AD No.: 2008–0171, dated September 9, 2008; and Pilatus Aircraft Ltd. Pilatus PC–6 Service Bulletin No. 32–002, Revision 2, dated April 29, 2008, for related information.

Issued in Kansas City, Missouri, on September 10, 2008.

**James E. Jackson,**

*Acting Manager, Small Airplane Directorate, Aircraft Certification Service.*

[FR Doc. E8–21691 Filed 9–16–08; 8:45 am]

**BILLING CODE 4910–13–P**

---

## DEPARTMENT OF TRANSPORTATION

## Federal Aviation Administration

## 14 CFR Part 39

**[Docket No. FAA–2008–0991; Directorate Identifier 2008–CE–054–AD]**

**RIN 2120–AA64**

## Airworthiness Directives; Diamond Aircraft Industries GmbH Model DA 42 Airplanes

**AGENCY:** Federal Aviation Administration (FAA), Department of Transportation (DOT).

**ACTION:** Notice of proposed rulemaking (NPRM).

**SUMMARY:** We propose to adopt a new airworthiness directive (AD) for the products listed above. This proposed AD results from mandatory continuing airworthiness information (MCAI) originated by an aviation authority of another country to identify and correct an unsafe condition on an aviation product. The MCAI describes the unsafe condition as:

In-service experience indicates that the powder coating of the rear right hand (RH) engine support bracket degrades over time, leading to a reduced torque of the engine mountings bolts. In some cases, bolts had fully unscrewed and fell into the engine cowling. One case was reported where the pilot had to shut down an engine in flight because of a failed V-belt, the cause of failure assumed to be one of these bolts. This condition, if not corrected, may lead to further cases of loose bolts and subsequent damage to the engine or accessories in the engine compartment, possibly resulting in in-flight engine shut-down and reduced control of the aircraft.

The proposed AD would require actions that are intended to address the unsafe condition described in the MCAI.

**DATES:** We must receive comments on this proposed AD by October 17, 2008.

**ADDRESSES:** You may send comments by any of the following methods:

- *Federal eRulemaking Portal:* Go to *http://www.regulations.gov*. Follow the instructions for submitting comments.
- *Fax:* (202) 493–2251.
- *Mail:* U.S. Department of Transportation, Docket Operations, M–30, West Building Ground Floor, Room W12–140, 1200 New Jersey Avenue, SE., Washington, DC 20590.
- *Hand Delivery:* U.S. Department of Transportation, Docket Operations, M–30, West Building Ground Floor, Room W12–140, 1200 New Jersey Avenue, SE., Washington, DC 20590, between 9 a.m. and 5 p.m., Monday through Friday, except Federal holidays.

### Examining the AD Docket

You may examine the AD docket on the Internet at *http://www.regulations.gov*; or in person at the Docket Management Facility between 9 a.m. and 5 p.m., Monday through Friday, except Federal holidays. The AD docket contains this proposed AD, the regulatory evaluation, any comments received, and other information. The street address for the Docket Office (telephone (800) 647–5527) is in the **ADDRESSES** section. Comments will be available in the AD docket shortly after receipt.

**FOR FURTHER INFORMATION CONTACT:** Sarjapur Nagarajan, Aerospace Engineer, FAA, Small Airplane Directorate, 901 Locust, Room 301, Kansas City, Missouri 64106; telephone: (816) 329–4145; fax: (816) 329–4090.

**SUPPLEMENTARY INFORMATION:**

### Comments Invited

We invite you to send any written relevant data, views, or arguments about this proposed AD. Send your comments to an address listed under the **ADDRESSES** section. Include ''Docket No. FAA–2008–0991; Directorate Identifier 2008–CE–054–AD'' at the beginning of your comments. We specifically invite comments on the overall regulatory, economic, environmental, and energy aspects of this proposed AD. We will consider all comments received by the closing date and may amend this proposed AD because of those comments.

We will post all comments we receive, without change, to *http://www.regulations.gov*, including any personal information you provide. We will also post a report summarizing each substantive verbal contact we receive about this proposed AD.

### Discussion

The European Aviation Safety Agency (EASA), which is the Technical Agent for the Member States of the European Community, has issued AD No. 2008–0139, dated July 24, 2008 (referred to after this as ''the MCAI''), to correct an unsafe condition for the specified products. The MCAI states:

In-service experience indicates that the powder coating of the rear right hand (RH) engine support bracket degrades over time, leading to a reduced torque of the engine mountings bolts. In some cases, bolts had fully unscrewed and fell into the engine cowling. One case was reported where the pilot had to shut down an engine in flight because of a failed V-belt, the cause of failure assumed to be one of these bolts. This condition, if not corrected, may lead to further cases of loose bolts and subsequent damage to the engine or accessories in the engine compartment, possibly resulting in in-flight engine shut-down and reduced control of the aircraft.

To address and correct this situation, DAI has published MSB–42–058, providing instructions to accomplish repetitive inspections and correction of the fastening torque of the affected engine mounting bolts and replacement of the bolts with wire-secured bolts Part Number (P/N) D60–9071–26–01, after which the repetitive torque checks are no longer required.

For the reasons described above, this EASA AD requires the accomplishment of repetitive torque checks of the affected engine mounting bolts and replacement of the bolts with wire-secured bolts.

You may obtain further information by examining the MCAI in the AD docket.

### Relevant Service Information

Diamond Aircraft Industries GmbH has issued Mandatory Service Bulletin No. MSB–42–058, dated May 21, 2008; and Work Instruction WI–MSB–42–058, dated March 12, 2008. The actions described in this service information are intended to correct the unsafe condition identified in the MCAI.

### FAA's Determination and Requirements of the Proposed AD

This product has been approved by the aviation authority of another country, and is approved for operation in the United States. Pursuant to our bilateral agreement with this State of Design Authority, they have notified us of the unsafe condition described in the MCAI and service information referenced above. We are proposing this AD because we evaluated all information and determined the unsafe

condition exists and is likely to exist or develop on other products of the same type design.

**Differences Between This Proposed AD and the MCAI or Service Information**

We have reviewed the MCAI and related service information and, in general, agree with their substance. But we might have found it necessary to use different words from those in the MCAI to ensure the AD is clear for U.S. operators and is enforceable. In making these changes, we do not intend to differ substantively from the information provided in the MCAI and related service information.

We might also have proposed different actions in this AD from those in the MCAI in order to follow FAA policies. Any such differences are highlighted in a Note within the proposed AD.

**Costs of Compliance**

We estimate that this proposed AD will affect 157 products of U.S. registry. We also estimate that it would take about 1.5 work-hours per product to comply with the basic requirements of this proposed AD. The average labor rate is $80 per work-hour. Required parts would cost about $0 per product. Where the service information lists required parts costs that are covered under warranty, we have assumed that there will be no charge for these costs. As we do not control warranty coverage for affected parties, some parties may incur costs higher than estimated here.

Based on these figures, we estimate the cost of the proposed AD on U.S. operators to be $18,840, or $120 per product.

**Authority for This Rulemaking**

Title 49 of the United States Code specifies the FAA's authority to issue rules on aviation safety. Subtitle I, section 106, describes the authority of the FAA Administrator. ''Subtitle VII: Aviation Programs,'' describes in more detail the scope of the Agency's authority.

We are issuing this rulemaking under the authority described in ''Subtitle VII, Part A, Subpart III, Section 44701: General requirements.'' Under that section, Congress charges the FAA with promoting safe flight of civil aircraft in air commerce by prescribing regulations for practices, methods, and procedures the Administrator finds necessary for safety in air commerce. This regulation is within the scope of that authority because it addresses an unsafe condition that is likely to exist or develop on products identified in this rulemaking action.

**Regulatory Findings**

We determined that this proposed AD would not have federalism implications under Executive Order 13132. This proposed AD would not have a substantial direct effect on the States, on the relationship between the national Government and the States, or on the distribution of power and responsibilities among the various levels of government.

*For the reasons discussed above, I certify this proposed regulation:*

1. Is not a ''significant regulatory action'' under Executive Order 12866;

2. Is not a ''significant rule'' under the DOT Regulatory Policies and Procedures (44 FR 11034, February 26, 1979); and

3. Will not have a significant economic impact, positive or negative, on a substantial number of small entities under the criteria of the Regulatory Flexibility Act.

We prepared a regulatory evaluation of the estimated costs to comply with this proposed AD and placed it in the AD docket.

**List of Subjects in 14 CFR Part 39**

Air transportation, Aircraft, Aviation safety, Safety.

**The Proposed Amendment**

Accordingly, under the authority delegated to me by the Administrator, the FAA proposes to amend 14 CFR part 39 as follows:

## PART 39—AIRWORTHINESS DIRECTIVES

1. The authority citation for part 39 continues to read as follows:

**Authority:** 49 U.S.C. 106(g), 40113, 44701.

**§ 39.13 [Amended]**

2. The FAA amends § 39.13 by adding the following new AD:

**Diamond Aircraft Industries GmbH:** Docket No. FAA–2008–0991; Directorate Identifier 2008–CE–054–AD.

**Comments Due Date**

(a) We must receive comments by October 17, 2008.

**Affected ADs**

(b) None.

**Applicability**

(c) This AD applies to Model DA 42 airplanes, all serial numbers, certificated in any category, that have Thielert TAE125–01 engines installed, except those airplanes with engines identified by serial number in Diamond Aircraft Industries GmbH Mandatory Service Bulletin No. MSB–42–058, dated May 21, 2008, that have been installed on the aircraft with wedge locking washers and bonded-in bolts and are therefore not affected by this AD.

**Subject**

(d) Air Transport Association of America (ATA) Code 71: Power Plant.

**Reason**

(e) The mandatory continuing airworthiness information (MCAI) states:

In-service experience indicates that the powder coating of the rear right hand (RH) engine support bracket degrades over time, leading to a reduced torque of the engine mountings bolts. In some cases, bolts had fully unscrewed and fell into the engine cowling. One case was reported where the pilot had to shut down an engine in flight because of a failed V-belt, the cause of failure assumed to be one of these bolts. This condition, if not corrected, may lead to further cases of loose bolts and subsequent damage to the engine or accessories in the engine compartment, possibly resulting in in-flight engine shut-down and reduced control of the aircraft.

To address and correct this situation, DAI has published MSB–42–058, providing instructions to accomplish repetitive inspections and correction of the fastening torque of the affected engine mounting bolts and replacement of the bolts with wire-secured bolts Part Number (P/N) D60–9071–26–01, after which the repetitive torque checks are no longer required.

For the reasons described above, this EASA AD requires the accomplishment of repetitive torque checks of the affected engine mounting bolts and replacement of the bolts with wire-secured bolts.

**Actions and Compliance**

(f) Unless already done, do the following actions:

(1) Within 100 hours time-in-service (TIS) after the effective date of this AD and thereafter at intervals not to exceed 100 hours TIS, do the inspection and correction of the fastening torque of the RH rear engine support bracket mounting bolts following Diamond Aircraft Industries GmbH Mandatory Service Bulletin No. MSB–42–058, dated May 21, 2008; and Action 1 of Diamond Aircraft Industries GmbH Work Instruction WI–MSB–42–058, dated March 12, 2008.

(2) Within 6 months after the effective date of this AD, replace all RH rear engine support bracket mounting bolts with wire-secured bolts, P/N D60–9071–26–01, following Diamond Aircraft Industries GmbH Mandatory Service Bulletin No. MSB–42–058, dated May 21, 2008; and Action 2 of Diamond Aircraft Industries GmbH Work Instruction WI–MSB–42–058, dated March 12, 2008.

(3) After installation of the wire-secured bolts, P/N D60–9071–26–01, as required by paragraph (f)(2) of this AD, the repetitive torque inspections required by paragraph (f)(1) of this AD are no longer required.

(4) As of 6 months after the effective date of this AD, no person shall install spare RH rear engine support bracket mounting bolts as replacement parts on any aircraft to which this AD applies, except wire-secured bolts identified by P/N D60–9071–26–01.

**FAA AD Differences**

**Note:** This AD differs from the MCAI and/or service information as follows: No differences.

**Other FAA AD Provisions**

(g) The following provisions also apply to this AD:

*(1) Alternative Methods of Compliance (AMOCs):* The Manager, Standards Office, FAA, has the authority to approve AMOCs for this AD, if requested using the procedures found in 14 CFR 39.19. Send information to ATTN: Sarjapur Nagarajan, Aerospace Engineer, FAA, Small Airplane Directorate, 901 Locust, Room 301, Kansas City, Missouri 64106; telephone: (816) 329–4145; fax: (816) 329–4090. Before using any approved AMOC on any airplane to which the AMOC applies, notify your appropriate principal inspector (PI) in the FAA Flight Standards District Office (FSDO), or lacking a PI, your local FSDO.

*(2) Airworthy Product:* For any requirement in this AD to obtain corrective actions from a manufacturer or other source, use these actions if they are FAA-approved. Corrective actions are considered FAA-approved if they are approved by the State of Design Authority (or their delegated agent). You are required to assure the product is airworthy before it is returned to service.

*(3) Reporting Requirements:* For any reporting requirement in this AD, under the provisions of the Paperwork Reduction Act (44 U.S.C. 3501 et seq.), the Office of Management and Budget (OMB) has approved the information collection requirements and has assigned OMB Control Number 2120–0056.

**Related Information**

(h) Refer to MCAI European Aviation Safety Agency (EASA) AD No. 2008–0139, dated July 24, 2008; Diamond Aircraft Industries GmbH Mandatory Service Bulletin No. MSB–42–058, dated May 21, 2008; and Diamond Aircraft Industries GmbH Work Instruction WI–MSB–42–058, dated March 12, 2008, for related information.

Issued in Kansas City, Missouri, on September 10, 2008.

**James E. Jackson,**

*Acting Manager, Small Airplane Directorate, Aircraft Certification Service.*

[FR Doc. E8–21701 Filed 9–16–08; 8:45 am]

BILLING CODE 4910–13–P

## DEPARTMENT OF TRANSPORTATION

## Federal Aviation Administration

## 14 CFR Part 39

**[Docket No. FAA–2008–0979; Directorate Identifier 2008–NM–079–AD]**

**RIN 2120–AA64**

## Airworthiness Directives; Airbus Model A300–600 Airplanes

**AGENCY:** Federal Aviation Administration (FAA), DOT.

**ACTION:** Notice of proposed rulemaking (NPRM).

**SUMMARY:** We propose to adopt a new airworthiness directive (AD) for the products listed above. This proposed AD results from mandatory continuing airworthiness information (MCAI) originated by an aviation authority of another country to identify and correct an unsafe condition on an aviation product. The MCAI describes the unsafe condition as:

Further to initial qualification tests of the spoiler actuators currently installed in position No. 3 to 7 on A300–600 and A300–600ST aircraft fleet, a life limit [of 55,750 flight hours] has been defined by the actuator manufacturer. Initially, this life limit had no repercussions, as it was situated well beyond the initial Design Service Goal (DSG) of the aircraft. However, due to the Extended Service Goal (ESG) activities, the spoiler actuator life limit can be reached in service, and therefore the spoiler actuators must be replaced before exceeding this limit.

In order to mitigate the risk to have aircraft on which the three hydraulic circuits would be impacted by affected spoiler actuators, which could result in the loss of controllability of the aircraft, this Airworthiness Directive (AD) requires actions to ensure that at least the level of safety of one hydraulic circuit will be restored within an acceptable timeframe.

* * * * *

The proposed AD would require actions that are intended to address the unsafe condition described in the MCAI.

**DATES:** We must receive comments on this proposed AD by October 17, 2008.

**ADDRESSES:** You may send comments by any of the following methods:

- *Federal eRulemaking Portal:* Go to *http://www.regulations.gov.* Follow the instructions for submitting comments.
- *Fax:* (202) 493–2251.
- *Mail:* U.S. Department of Transportation, Docket Operations, M–30, West Building Ground Floor, Room W12–140, 1200 New Jersey Avenue, SE., Washington, DC 20590.
- *Hand Delivery:* U.S. Department of Transportation, Docket Operations, M–30, West Building Ground Floor, Room W12–40, 1200 New Jersey Avenue, SE., Washington, DC, between 9 a.m. and 5 p.m., Monday through Friday, except Federal holidays.

### Examining the AD Docket

You may examine the AD docket on the Internet at *http://www.regulations.gov;* or in person at the Docket Operations office between 9 a.m. and 5 p.m., Monday through Friday, except Federal holidays. The AD docket contains this proposed AD, the regulatory evaluation, any comments received, and other information. The street address for the Docket Operations office (telephone (800) 647–5527) is in the **ADDRESSES** section. Comments will be available in the AD docket shortly after receipt.

**FOR FURTHER INFORMATION CONTACT:** Dan Rodina, Aerospace Engineer, International Branch, ANM–116, Transport Airplane Directorate, FAA, 1601 Lind Avenue, SW., Renton, Washington 98057–3356; telephone (425) 227–2125; fax (425) 227–1149.

**SUPPLEMENTARY INFORMATION:**

### Comments Invited

We invite you to send any written relevant data, views, or arguments about this proposed AD. Send your comments to an address listed under the **ADDRESSES** section. Include ''Docket No. FAA–2008–0979; Directorate Identifier 2008–NM–079–AD'' at the beginning of your comments. We specifically invite comments on the overall regulatory, economic, environmental, and energy aspects of this proposed AD. We will consider all comments received by the closing date and may amend this proposed AD based on those comments.

We will post all comments we receive, without change, to *http://www.regulations.gov,* including any personal information you provide. We will also post a report summarizing each substantive verbal contact we receive about this proposed AD.

### Discussion

The European Aviation Safety Agency (EASA), which is the Technical Agent for the Member States of the European Community, has issued EASA Airworthiness Directive 2008–0058, dated March 20, 2008 (referred to after this as ''the MCAI''), to correct an unsafe condition for the specified products. The MCAI states:

Further to initial qualification tests of the spoiler actuators currently installed in position No. 3 to 7 on A300–600 and A300–600ST aircraft fleet, a life limit [of 55,750 flight hours] has been defined by the actuator manufacturer. Initially, this life limit had no repercussions, as it was situated well beyond the initial Design Service Goal (DSG) of the aircraft. However, due to the Extended Service Goal (ESG) activities, the spoiler actuator life limit can be reached in service, and therefore the spoiler actuators must be replaced before exceeding this limit.

In order to mitigate the risk to have aircraft on which the three hydraulic circuits would be impacted by affected spoiler actuators, which could result in the loss of controllability of the aircraft, this Airworthiness Directive (AD) requires actions to ensure that at least the level of safety of one hydraulic circuit will be restored within an acceptable timeframe.

EASA AD 2007–0245, issued on 05 September 2007 as an interim action, is superseded by the present [EASA] AD.

Corrective actions include replacing the spoiler actuator with a serviceable unit. You may obtain further information by examining the MCAI in the AD docket.

**Relevant Service Information**

Airbus has issued Service Bulletins A300–27–6060, including Appendix 01, dated February 18, 2008, and A300–27A6062, including Appendix 01, dated July 6, 2007. The actions described in this service information are intended to correct the unsafe condition identified in the MCAI.

**FAA's Determination and Requirements of This Proposed AD**

This product has been approved by the aviation authority of another country, and is approved for operation in the United States. Pursuant to our bilateral agreement with the State of Design Authority, we have been notified of the unsafe condition described in the MCAI and service information referenced above. We are proposing this AD because we evaluated all pertinent information and determined an unsafe condition exists and is likely to exist or develop on other products of the same type design.

**Differences Between This AD and the MCAI or Service Information**

We have reviewed the MCAI and related service information and, in general, agree with their substance. But we might have found it necessary to use different words from those in the MCAI to ensure the AD is clear for U.S. operators and is enforceable. In making these changes, we do not intend to differ substantively from the information provided in the MCAI and related service information.

We might also have proposed different actions in this AD from those in the MCAI in order to follow FAA policies. Any such differences are highlighted in a Note within the proposed AD.

**Costs of Compliance**

Based on the service information, we estimate that this proposed AD would affect about 135 products of U.S. registry. We also estimate that it would take about 8 work-hours per product to comply with the basic requirements of this proposed AD. The average labor rate is $80 per work-hour. Required parts would cost about $32,000 per product. Where the service information lists required parts costs that are covered under warranty, we have assumed that there will be no charge for these costs. As we do not control warranty coverage for affected parties, some parties may incur costs higher than estimated here. Based on these figures, we estimate the cost of the proposed AD on U.S. operators to be $4,406,400, or $32,640 per product.

**Authority for This Rulemaking**

Title 49 of the United States Code specifies the FAA's authority to issue rules on aviation safety. Subtitle I, section 106, describes the authority of the FAA Administrator. ''Subtitle VII: Aviation Programs,'' describes in more detail the scope of the Agency's authority.

We are issuing this rulemaking under the authority described in ''Subtitle VII, Part A, Subpart III, Section 44701: General requirements.'' Under that section, Congress charges the FAA with promoting safe flight of civil aircraft in air commerce by prescribing regulations for practices, methods, and procedures the Administrator finds necessary for safety in air commerce. This regulation is within the scope of that authority because it addresses an unsafe condition that is likely to exist or develop on products identified in this rulemaking action.

**Regulatory Findings**

We determined that this proposed AD would not have federalism implications under Executive Order 13132. This proposed AD would not have a substantial direct effect on the States, on the relationship between the national Government and the States, or on the distribution of power and responsibilities among the various levels of government.

*For the reasons discussed above, I certify this proposed regulation:*

1. Is not a ''significant regulatory action'' under Executive Order 12866;

2. Is not a ''significant rule'' under the DOT Regulatory Policies and Procedures (44 FR 11034, February 26, 1979); and

3. Will not have a significant economic impact, positive or negative, on a substantial number of small entities under the criteria of the Regulatory Flexibility Act.

We prepared a regulatory evaluation of the estimated costs to comply with this proposed AD and placed it in the AD docket.

**List of Subjects in 14 CFR Part 39**

Air transportation, Aircraft, Aviation safety, Safety.

**The Proposed Amendment**

Accordingly, under the authority delegated to me by the Administrator, the FAA proposes to amend 14 CFR part 39 as follows:

## PART 39—AIRWORTHINESS DIRECTIVES

1. The authority citation for part 39 continues to read as follows:

**Authority:** 49 U.S.C. 106(g), 40113, 44701.

**§ 39.13 [Amended]**

2. The FAA amends § 39.13 by adding the following new AD:

**Airbus:** Docket No. FAA–2008–0979; Directorate Identifier 2008–NM–079–AD.

**Comments Due Date**

(a) We must receive comments by October 17, 2008.

**Affected ADs**

(b) None.

**Applicability**

(c) This AD applies to Airbus Model A300–600 airplanes, all serial numbers, certificated in any category; on which Smith spoiler actuators having part number (P/N) P376A0002–05, –06, –07, or –09, or P/N P725A0001–00 are installed.

**Subject**

(d) Air Transport Association (ATA) of America Code 27: Flight controls.

**Reason**

(e) The mandatory continuing airworthiness information (MCAI) states:

Further to initial qualification tests of the spoiler actuators currently installed in position No. 3 to 7 on A300–600 and A300–600ST aircraft fleet, a life limit [of 55,750 flight hours] has been defined by the actuator manufacturer. Initially, this life limit had no repercussions, as it was situated well beyond the initial Design Service Goal (DSG) of the aircraft. However, due to the Extended Service Goal (ESG) activities, the spoiler actuator life limit can be reached in service, and therefore the spoiler actuators must be replaced before exceeding this limit.

In order to mitigate the risk to have aircraft on which the three hydraulic circuits would be impacted by affected spoiler actuators, which could result in the loss of controllability of the aircraft, this Airworthiness Directive (AD) requires actions to ensure that at least the level of safety of one hydraulic circuit will be restored within an acceptable timeframe.

EASA AD 2007–0245, issued on 05 September 2007 as an interim action, is superseded by the present [EASA] AD. Corrective actions include replacing the spoiler actuator with a serviceable unit.

**Actions and Compliance**

(f) Unless already done: Within 700 flight hours after the effective date of this AD, do the following actions.

(1) Identify the total flight hours accumulated on each spoiler actuator at positions 3 through 7 on the left- and right-hand sides of the airplane (FIN 22CP/23CP, 24CP/25CP, 26CP/27CP, 60CP/61CP and

62CP/63CP), in accordance with the Accomplishment Instructions of Airbus Service Bulletin A300–27A6062, dated July 6, 2007.

(2) For airplanes on which the status of any spoiler actuator is unknown (unknown number of accumulated flight hours, unknown date of manufacture and/or unknown serial number) the actuator must be considered as having exceeded 55,750 total flight hours.

(3) For airplanes on which all three hydraulic circuits have a spoiler actuator that has accumulated or exceeds 55,000 total flight hours: Before the accumulation of 55,750 total flight hours or within 700 flight hours after the effective date of this AD, whichever occurs later, on at least one hydraulic circuit, interchange the spoiler actuator with a serviceable unit from another hydraulic circuit, or replace the spoiler actuator with a serviceable unit, in accordance with the Accomplishment Instructions of Airbus Service Bulletin A300–27–6060, dated February 18, 2008.

(4) For airplanes on which the actions required by paragraph (f)(1) of this AD, and, as applicable, paragraph (f)(3) of this AD have been accomplished, each airplane must continue to have at least one hydraulic circuit fitted with spoiler actuators that do not exceed 55,750 total flight hours.

**Note 1:** For the purposes of this AD, a serviceable unit is a unit that has accumulated less than 55,750 flight hours.

(5) The operator must not interchange or replace spoiler actuators on more than two hydraulic circuits at the same time. This will mitigate the risk of having a malfunction on the three hydraulic systems at the same time.

**FAA AD Differences**

**Note 2:** This AD differs from the MCAI and/or service information as follows:

(1) This AD does not include the reporting requirement specified in paragraph (1) of the MCAI. The MCAI carried this requirement forward from European Aviation Safety Agency (EASA) Airworthiness Directive 2007–0245, dated September 5, 2007. We previously determined that no action was required on our part regarding EASA AD 2007–0245.

**Other FAA AD Provisions**

(g) The following provisions also apply to this AD:

*(1) Alternative Methods of Compliance (AMOCs):* The Manager, International Branch, ANM–116, Transport Airplane Directorate, FAA, has the authority to approve AMOCs for this AD, if requested using the procedures found in 14 CFR 39.19. Send information to ATTN: Dan Rodina, Aerospace Engineer, International Branch, ANM–116, Transport Airplane Directorate, FAA, 1601 Lind Avenue, SW., Renton, Washington 98057–3356; telephone (425) 227–2125; fax (425) 227–1149. Before using any approved AMOC on any airplane to which the AMOC applies, notify your appropriate principal inspector (PI) in the FAA Flight Standards District Office (FSDO), or lacking a PI, your local FSDO.

*(2) Airworthy Product:* For any requirement in this AD to obtain corrective actions from a manufacturer or other source, use these actions if they are FAA-approved. Corrective actions are considered FAA-approved if they are approved by the State of Design Authority (or their delegated agent). You are required to assure the product is airworthy before it is returned to service.

*(3) Reporting Requirements:* For any reporting requirement in this AD, under the provisions of the Paperwork Reduction Act, the Office of Management and Budget (OMB) has approved the information collection requirements and has assigned OMB Control Number 2120–0056.

**Related Information**

(h) Refer to MCAI EASA Airworthiness Directive 2008–0058, dated March 20, 2008; and Airbus Service Bulletins A300–27–6060, dated February 18, 2008; and A300–27A6062, dated July 6, 2007; for related information.

Issued in Renton, Washington, on September 9, 2008.

**Michael J. Kaszycki,**

*Acting Manager, Transport Airplane Directorate, Aircraft Certification Service.*

[FR Doc. E8–21724 Filed 9–16–08; 8:45 am]

BILLING CODE 4910–13–P

---

## DEPARTMENT OF TRANSPORTATION

## Federal Aviation Administration

## 14 CFR Part 39

**[Docket No. FAA–2008–0980; Directorate Identifier 2008–NM–008–AD]**

**RIN 2120–AA64**

## Airworthiness Directives; Airbus Model A330 Airplanes, and Model A340–200 and A340–300 Series Airplanes

**AGENCY:** Federal Aviation Administration (FAA), Department of Transportation (DOT).

**ACTION:** Notice of proposed rulemaking (NPRM).

**SUMMARY:** The FAA proposes to supersede an existing airworthiness directive (AD) that applies to certain Airbus Model A330, A340–200, and A340–300 series airplanes. The existing AD currently requires repetitive inspections of a certain bracket that attaches the flight deck instrument panel to the airplane structure; related investigative and corrective actions if necessary; and replacement of the existing bracket with a titanium-reinforced bracket, which ends the repetitive inspections in the existing AD. This proposed AD would add requirements only for airplanes on which the existing bracket was replaced with a titanium-reinforced bracket in accordance with the existing AD. The additional requirement is a one-time inspection to determine if certain fasteners are broken or cracked, and corrective actions if necessary. This proposed AD results from a report that incorrect torque values could damage the bracket. We are proposing this AD to prevent a cracked bracket. Failure of this bracket, combined with failure of the horizontal beam, could result in collapse of the left part of the flight deck instrument panel, and consequent reduced controllability of the airplane.

**DATES:** We must receive comments on this proposed AD by October 17, 2008.

**ADDRESSES:** You may send comments by any of the following methods:

- *Federal eRulemaking Portal:* Go to *http://www.regulations.gov.* Follow the instructions for submitting comments.
- *Fax:* 202–493–2251.
- *Mail:* U.S. Department of Transportation, Docket Operations, M–30, West Building Ground Floor, Room W12–140, 1200 New Jersey Avenue, SE., Washington, DC 20590.
- *Hand Delivery:* U.S. Department of Transportation, Docket Operations, M–30, West Building Ground Floor, Room W12–140, 1200 New Jersey Avenue, SE., Washington, DC 20590, between 9 a.m. and 5 p.m., Monday through Friday, except Federal holidays.

For service information identified in this AD, contact Airbus, 1 Rond Point Maurice Bellonte, 31707 Blagnac Cedex, France.

**Examining the AD Docket**

You may examine the AD docket on the Internet at *http://www.regulations.gov;* or in person at the Docket Management Facility between 9 a.m. and 5 p.m., Monday through Friday, except Federal holidays. The AD docket contains this proposed AD, the regulatory evaluation, any comments received, and other information. The street address for the Docket Office (telephone 800–647–5527) is in the **ADDRESSES** section. Comments will be available in the AD docket shortly after receipt.

**FOR FURTHER INFORMATION CONTACT:** Vladimir Ulyanov, Aerospace Engineer, International Branch, ANM–116, Transport Airplane Directorate, FAA, 1601 Lind Avenue, SW., Renton, Washington 98057–3356; telephone (425) 227–1138; fax (425) 227–1149.

**SUPPLEMENTARY INFORMATION:**

**Comments Invited**

We invite you to send any written relevant data, views, or arguments about this proposed AD. Send your comments to an address listed under the **ADDRESSES** section. Include ''Docket No. FAA–2008–0980; Directorate Identifier

2008–NM–008–AD'' at the beginning of your comments. We specifically invite comments on the overall regulatory, economic, environmental, and energy aspects of this proposed AD. We will consider all comments received by the closing date and may amend this proposed AD because of those comments.

We will post all comments we receive, without change, to *http://www.regulations.gov,* including any personal information you provide. We will also post a report summarizing each substantive verbal contact we receive about this proposed AD.

**Discussion**

On December 21, 2006, we issued AD 2006–26–12, amendment 39–14870 (72 FR 256, January 4, 2007), for certain Airbus Model A330, A340–200, and A340–300 series airplanes. That AD superseded AD 2005–06–08, amendment 39–14016 (70 FR 13345, March 21, 2005) and requires repetitive inspections of a certain bracket that attaches the flight deck instrument panel to the airplane structure; replacement of the bracket with a new, improved bracket; and related investigative and corrective actions if necessary. That AD further requires replacement of the existing bracket with a titanium-reinforced bracket, which would end the repetitive inspections. AD 2006–26–12 resulted from a report of cracking damage found on certain brackets that were replaced per the requirements of AD 2005–06–08. We issued AD 2006–26–12 to prevent a cracked bracket. Failure of this bracket, combined with failure of the horizontal beam, could result in collapse of the left part of the flight deck instrument panel, and consequent reduced controllability of the airplane.

**Actions Since Existing AD Was Issued**

Since we issued AD 2006–26–12, we have received a report that incorrect torque values could damage the bracket. These incorrect torque values were included in Airbus Service Bulletins A330–25–3249 and A340–25–4245, both dated May 3, 2005. We referred to those service bulletins in AD 2006–26–12 as the appropriate sources of service information for replacing the existing bracket with a titanium-reinforced bracket. Airbus has now revised these service bulletins (both Revision 01, both dated July 10, 2007) to include the correct torque values.

The European Aviation Safety Agency (EASA) mandated the service information and issued EASA airworthiness directives 2007–0281 and 2007–0282, both dated November 6, 2007, to ensure the continued airworthiness of these airplanes in the European Union.

**Relevant Service Information**

As stated above, Airbus has issued Mandatory Service Bulletins A330–25–3249 and A340–25–4245, both Revision 01, and both dated July 10, 2007. The procedures in Revision 01 of the service bulletins are essentially the same as the procedures in the original issue. However, Revision 01 of the service bulletins specifies new procedures for airplanes on which the bracket has been replaced in accordance with the procedures specified in the original issue. The new procedures are removing the fasteners of the titanium-reinforced bracket and, if a fastener is broken, doing a detailed inspection for cracking of the horizontal beam. If any crack is found, the service bulletins specify the corrective action of contacting Airbus for repair procedures. If no crack is found, the service bulletins specify the corrective action of installing new fasteners on the bracket.

**FAA's Determination and Requirements of the Proposed AD**

These airplanes are manufactured in France and are type certificated for operation in the United States under the provisions of section 21.29 of the Federal Aviation Regulations (14 CFR 21.29) and the applicable bilateral airworthiness agreement. Pursuant to this bilateral airworthiness agreement, the EASA has kept the FAA informed of the situation described above. We have examined the EASA's findings, evaluated all pertinent information, and determined that AD action is necessary for airplanes of this type design that are certificated for operation in the United States.

This proposed AD would supersede AD 2006–26–12 and would retain the requirements of the existing AD. This proposed AD would also require accomplishing the actions specified in Airbus Mandatory Service Bulletins A330–25–3249 and A340–25–4245, both Revision 01, and both dated July 10, 2007, as discussed under ''Difference Between the Proposed AD and the EASA Airworthiness Directives.''

**Difference Between the Proposed AD and the EASA Airworthiness Directives**

The EASA airworthiness directives specify contacting Airbus for instructions on how to repair certain conditions. This proposed AD requires repairing those conditions using a method that we or the EASA approve. In light of the type of repair that would be required to address the unsafe condition, and consistent with existing bilateral airworthiness agreements, we have determined that, for this proposed AD, a repair we or the EASA (or its delegated agent) approve would be acceptable for compliance with this proposed AD.

**Costs of Compliance**

The following table provides the estimated costs for U.S. operators to comply with this proposed AD. This proposed AD would affect about 24 Model A330 series airplanes of U.S. registry. There are currently no affected Model A340–200 and –300 series airplanes of U.S. registry. However, if one of these airplanes is imported and put on the U.S. Register in the future, these cost estimates would also apply to those airplanes.

ESTIMATED COSTS

| Action | Work hours | Average labor rate per hour | Parts | Cost per airplane | Fleet cost |
|---|---|---|---|---|---|
| Inspections (required by AD 2006–26–12). | 1 | $80 | $0 | $80, per inspection cycle ..... | $1,920, per inspection cycle. |
| Replacement and investigative actions (required by AD 2006–26–12). | 9 | 80 | 330 | $1,050 ..... | $25,200. |
| One-time inspection (new proposed action). | 2 | 80 | 0 | $160 ..... | Up to $3,840. |

## Authority for This Rulemaking

Title 49 of the United States Code specifies the FAA's authority to issue rules on aviation safety. Subtitle I, Section 106, describes the authority of the FAA Administrator. Subtitle VII, Aviation Programs, describes in more detail the scope of the Agency's authority.

We are issuing this rulemaking under the authority described in Subtitle VII, Part A, Subpart III, Section 44701, ''General requirements.'' Under that section, Congress charges the FAA with promoting safe flight of civil aircraft in air commerce by prescribing regulations for practices, methods, and procedures the Administrator finds necessary for safety in air commerce. This regulation is within the scope of that authority because it addresses an unsafe condition that is likely to exist or develop on products identified in this rulemaking action.

## Regulatory Findings

We have determined that this proposed AD would not have federalism implications under Executive Order 13132. This proposed AD would not have a substantial direct effect on the States, on the relationship between the national Government and the States, or on the distribution of power and responsibilities among the various levels of government.

*For the reasons discussed above, I certify that the proposed regulation:*

1. Is not a ''significant regulatory action'' under Executive Order 12866;

2. Is not a ''significant rule'' under the DOT Regulatory Policies and Procedures (44 FR 11034, February 26, 1979); and

3. Will not have a significant economic impact, positive or negative, on a substantial number of small entities under the criteria of the Regulatory Flexibility Act.

We prepared a regulatory evaluation of the estimated costs to comply with this proposed AD and placed it in the AD docket. See the **ADDRESSES** section for a location to examine the regulatory evaluation.

## List of Subjects in 14 CFR Part 39

Air transportation, Aircraft, Aviation safety, Safety.

## The Proposed Amendment

Accordingly, under the authority delegated to me by the Administrator, the FAA proposes to amend 14 CFR part 39 as follows:

## PART 39—AIRWORTHINESS DIRECTIVES

1. The authority citation for part 39 continues to read as follows:

**Authority:** 49 U.S.C. 106(g), 40113, 44701.

### § 39.13 [Amended]

2. The Federal Aviation Administration (FAA) amends § 39.13 by removing amendment 39–14870 (72 FR 256, January 4, 2007) and adding the following new airworthiness directive (AD):

**Airbus:** Docket No. FAA–2008–0980; Directorate Identifier 2008–NM–008–AD.

### Comments Due Date

(a) The FAA must receive comments on this AD action by October 17, 2008.

### Affected ADs

(b) This AD supersedes AD 2006–26–12.

### Applicability

(c) This AD applies to all Airbus Model A330 airplanes, and Model A340–200 and A340–300 series airplanes; certificated in any category; except those airplanes identified in paragraphs (c)(1), (c)(2) and (c)(3) of this AD.

(1) Model A330 airplanes, and Model A340–200, and A340–300 series airplanes on which Airbus Modification 53446 has been incorporated in production.

(2) Model A330 airplanes on which Airbus Service Bulletin A330–25–3249, Revision 01, dated July 10, 2007, has been embodied in service.

(3) Model A340–200 and –300 series airplanes on which Airbus Service Bulletin A340–25–4245, Revision 01, dated July 10, 2007, has been embodied in service.

### Unsafe Condition

(d) This AD results from a report that incorrect torque values could damage a certain bracket that attaches the flight deck instrument panel to the airplane structure. We are issuing this AD to prevent a cracked bracket. Failure of this bracket, combined with failure of the horizontal beam, could result in collapse of the left part of the flight deck instrument panel, and consequent reduced controllability of the airplane.

### Compliance

(e) You are responsible for having the actions required by this AD performed within the compliance times specified, unless the actions have already been done.

### Service Bulletin Reference

(f) The term ''service bulletin,'' as used in this AD, means the Accomplishment Instructions of the service bulletins identified in paragraphs (f)(1), (f)(2), and (f)(3) of this AD, as applicable.

(1) For the requirements of paragraphs (g), (h), and (i) of this AD: Airbus Service Bulletins A330–25–3227 and A340–25–4230, both Revision 01, both dated May 3, 2005. Accomplishment before February 8, 2007 (the effective date of AD 2006–26–12) of Airbus Service Bulletins A330–25–3227 and A340–25–4230, both including Appendix 01, both dated June 17, 2004, as applicable, is an acceptable means of compliance for paragraphs (g), (h), and (i) of this AD.

(2) For the requirements of paragraph (k) of this AD done before the effective date of this AD: Airbus Service Bulletins A330–25–3249 and A340–25–4245, both dated May 3, 2005, as applicable.

(3) For the requirements of paragraph (k) of this AD done after the effective date of this AD, and for the requirements of paragraph (l) of this AD: Airbus Mandatory Service Bulletins A330–25–3249 and A340–25–4245, both Revision 01, both dated July 10, 2007, as applicable.

### Restatement of the Requirements of AD 2006–26–12

### Initial Inspection

(g) At the applicable time specified in paragraph (g)(1) or (g)(2) of this AD, perform a detailed inspection of the bracket having part number (P/N) F2511012920000, which attaches the flight deck instrument panel to airplane structure, in accordance with the applicable service bulletin.

(1) For Model A330 series airplanes: Prior to the accumulation of 16,500 total flight cycles, or within 60 days after April 25, 2005 (the effective date of AD 2005–06–08, amendment 39–14016, which was superseded by AD 2006–26–12), whichever is later.

(2) For Model A340–200 and –300 series airplanes: Prior to the accumulation of 9,700 total flight cycles, or within 2,700 flight cycles after April 25, 2005, whichever is later.

**Note 1:** For the purposes of this AD, a detailed inspection is: ''An intensive examination of a specific item, installation, or assembly to detect damage, failure, or irregularity. Available lighting is normally supplemented with a direct source of good lighting at an intensity deemed appropriate. Inspection aids such as mirror, magnifying lenses, etc., may be necessary. Surface cleaning and elaborate procedures may be required.''

### No Cracking/Repetitive Inspections

(h) If no crack is found during the initial inspection required by paragraph (g) of this AD: Repeat the inspection thereafter at the applicable interval specified in paragraph (h)(1) or (h)(2) of this AD, until the replacement specified in paragraph (k) of this AD has been accomplished.

(1) For Model A330 series airplanes: Intervals not to exceed 13,800 flight cycles.

(2) For Model A340–200 and –300 series airplanes: Intervals not to exceed 7,000 flight cycles.

### Crack Found/Replacement and Repetitive Inspections

(i) If any crack is found during any inspection required by paragraph (g) or (h) of this AD: Do the actions in paragraphs (i)(1) and (i)(2) of this AD, except as provided by paragraph (j) of this AD, until accomplishment of the replacement required by paragraph (k) of this AD.

(1) Before further flight: Replace the cracked bracket with a new, improved bracket having P/N F2511012920095, in accordance with the service bulletin.

(2) Repeat the inspection of the replaced bracket as required by paragraph (g) of this AD, at the time specified in paragraph (i)(2)(i) or (i)(2)(ii) of this AD. Then, do repetitive inspections or replace the bracket as

specified in paragraph (h) or (i) of this AD, as applicable.

(i) For Model A330 series airplanes: Within 16,500 flight cycles after replacing the bracket.

(ii) For Model A340–200 and –300 series airplanes: Within 9,700 flight cycles after replacing the bracket.

(j) If both flanges of a bracket are found broken during any inspection required by this AD: Before further flight, replace the bracket as specified in paragraph (i) of this AD and perform any applicable related investigative and corrective actions (which may include inspections for damage to surrounding structure caused by the broken bracket, and corrective actions for any damage that is found), in accordance with a method approved by the Manager, International Branch, ANM–116, Transport Airplane Directorate, FAA; or the European Aviation Safety Agency (EASA) (or its delegated agent).

**Replacement of Brackets/Investigative and Corrective Actions**

(k) Except as required by paragraph (i)(1) of this AD: Within 72 months after February 8, 2007 (the effective date of AD 2006–26–12), replace existing brackets having P/N F2511012920000 or P/N F2511012920095 with titanium-reinforced brackets having P/N F2511305220096; and perform any related investigative and corrective actions (which may include detailed inspections for cracking of the bracket or damage to surrounding structure caused by a broken bracket, and applicable corrective actions for any damage that is found); in accordance with the applicable service bulletin. If any crack is found, before further flight, repair in accordance with the applicable service bulletin. Replacement of the affected bracket with a titanium-reinforced bracket having P/N F2511305220096 ends the repetitive inspections required by paragraph (h) or (i) of this AD. Although the service bulletins specify to submit certain information to the manufacturer, this AD does not include that requirement.

**New Requirements of This AD**

**One-Time Inspection**

(l) For airplanes on which the actions required by paragraph (k) of this AD have been accomplished before the effective date of this AD: At the applicable time in paragraph (l)(1) or (l)(2) of this AD, remove the fasteners of the titanium-reinforced bracket and, if a fastener is broken, do a detailed inspection for cracking of the horizontal beam. Do all applicable corrective actions before further flight. Do all actions in accordance with the applicable service bulletin. Where the applicable service bulletin specifies to contact Airbus, before further flight, repair in accordance with a method approved by the Manager, International Branch, ANM–116, Transport Airplane Directorate, FAA; or the EASA (or its delegated agent).

(1) For Model A330 series airplanes: Prior to the accumulation of 16,500 total flight cycles, or within 20 months after the effective date of this AD, whichever occurs first.

(2) For Model A340–200 and –300 series airplanes: Prior to the accumulation of 12,400 total flight cycles, or within 20 months after the effective date of this AD, whichever occurs first.

**Alternative Methods of Compliance (AMOCs)**

(m)(1) The Manager, International Branch, ANM–116, FAA, has the authority to approve AMOCs for this AD, if requested using the procedures found in 14 CFR 39.19. Send information to ATTN: Vladimir Ulyanov, Aerospace Engineer, International Branch, ANM–116, Transport Airplane Directorate, FAA, 1601 Lind Avenue, SW., Renton, Washington 98057–3356; telephone (425) 227–1138; fax (425) 227–1149. Before using any approved AMOC on any airplane to which the AMOC applies, notify your appropriate principal inspector (PI) in the FAA Flight Standards District Office (FSDO), or lacking a PI, your local FSDO.

(2) AMOCs approved previously in accordance with AD 2006–26–12 are approved as AMOCs for the corresponding provisions of this AD.

**Related Information**

(n) EASA airworthiness directives 2007–0281 and 2007–0282, both dated November 6, 2007, also address the subject of this AD.

Issued in Renton, Washington, on September 9, 2008.

**Michael J. Kaszycki,**

*Acting Manager, Transport Airplane Directorate, Aircraft Certification Service.*

[FR Doc. E8–21727 Filed 9–16–08; 8:45 am]

BILLING CODE 4910–13–P

---

## DEPARTMENT OF TRANSPORTATION

## Federal Aviation Administration

## 14 CFR Part 39

**[Docket No. FAA–2008–0977; Directorate Identifier 2008–NM–124–AD]**

**RIN 2120–AA64**

## Airworthiness Directives; Bombardier Model CL–600–2B19 (Regional Jet Series 100 & 440) Airplanes

**AGENCY:** Federal Aviation Administration (FAA), DOT.

**ACTION:** Notice of proposed rulemaking (NPRM).

**SUMMARY:** We propose to adopt a new airworthiness directive (AD) for the products listed above. This proposed AD results from mandatory continuing airworthiness information (MCAI) originated by an aviation authority of another country to identify and correct an unsafe condition on an aviation product. The MCAI describes the unsafe condition as:

Bombardier Aerospace has completed a system safety review of the CL–600–2B19 aircraft fuel system against the new fuel tank safety standards * * *.

The assessment showed that insufficient electrical bonding between the refuel/defuel shutoff valves and the aircraft structure could occur due to the presence of a non-conductive gasket (Gask-O-Seal). In addition, it was also determined that the presence of an anodic coating on the shutoff valve electrical conduit connection fitting could affect electrical bonding. The above conditions, if not corrected, could result in arcing and potential ignition source inside the fuel tank during lightning strikes and consequent fuel tank explosion.

* * * * *

The proposed AD would require actions that are intended to address the unsafe condition described in the MCAI.

**DATES:** We must receive comments on this proposed AD by October 17, 2008.

**ADDRESSES:** You may send comments by any of the following methods:

- *Federal eRulemaking Portal:* Go to *http://www.regulations.gov*. Follow the instructions for submitting comments.
- *Fax:* (202) 493–2251.
- *Mail:* U.S. Department of Transportation, Docket Operations, M–30, West Building Ground Floor, Room W12–140, 1200 New Jersey Avenue, SE., Washington, DC 20590.
- *Hand Delivery:* U.S. Department of Transportation, Docket Operations, M–30, West Building Ground Floor, Room W12–40, 1200 New Jersey Avenue, SE., Washington, DC, between 9 a.m. and 5 p.m., Monday through Friday, except Federal holidays.

**Examining the AD Docket**

You may examine the AD docket on the Internet at *http://www.regulations.gov*; or in person at the Docket Operations office between 9 a.m. and 5 p.m., Monday through Friday, except Federal holidays. The AD docket contains this proposed AD, the regulatory evaluation, any comments received, and other information. The street address for the Docket Operations office (telephone (800) 647–5527) is in the **ADDRESSES** section. Comments will be available in the AD docket shortly after receipt.

**FOR FURTHER INFORMATION CONTACT:** Rocco Viselli, Aerospace Engineer, Airframe and Propulsion Branch, ANE–171, FAA, New York Aircraft Certification Office, 1600 Stewart Avenue, Suite 410, Westbury, New York 11590; telephone (516) 228–7331; fax (516) 794–5531.

**SUPPLEMENTARY INFORMATION:**

**Comments Invited**

We invite you to send any written relevant data, views, or arguments about this proposed AD. Send your comments to an address listed under the **ADDRESSES** section. Include ''Docket No.

FAA–2008–0977; Directorate Identifier 2008–NM–124–AD'' at the beginning of your comments. We specifically invite comments on the overall regulatory, economic, environmental, and energy aspects of this proposed AD. We will consider all comments received by the closing date and may amend this proposed AD based on those comments.

We will post all comments we receive, without change, to *http://www.regulations.gov*, including any personal information you provide. We will also post a report summarizing each substantive verbal contact we receive about this proposed AD.

**Discussion**

Transport Canada Civil Aviation (TCCA), which is the aviation authority for Canada, has issued Canadian Airworthiness Directive CF–2008–20, dated June 12, 2008 (referred to after this as ''the MCAI''), to correct an unsafe condition for the specified products. The MCAI states:

> Bombardier Aerospace has completed a system safety review of the CL–600–2B19 aircraft fuel system against the new fuel tank safety standards, introduced in Chapter 525 of the Airworthiness Manual through Notice of Proposed Amendment (NPA) 2002–043. The identified non-compliances were assessed using Transport Canada Policy Letter No. 525–001 to determine if mandatory corrective action is required.
>
> The assessment showed that insufficient electrical bonding between the refuel/defuel shutoff valves and the aircraft structure could occur due to the presence of a non-conductive gasket (Gask-O-Seal). In addition, it was also determined that the presence of an anodic coating on the shutoff valve electrical conduit connection fitting could affect electrical bonding. The above conditions, if not corrected, could result in arcing and potential ignition source inside the fuel tank during lightning strikes and consequent fuel tank explosion.
>
> To correct the unsafe condition, this directive mandates the modification of the [shutoff valves in the] refuel/defuel system.

You may obtain further information by examining the MCAI in the AD docket.

The FAA has examined the underlying safety issues involved in fuel tank explosions on several large transport airplanes, including the adequacy of existing regulations, the service history of airplanes subject to those regulations, and existing maintenance practices for fuel tank systems. As a result of those findings, we issued a regulation titled ''Transport Airplane Fuel Tank System Design Review, Flammability Reduction and Maintenance and Inspection Requirements'' (66 FR 23086, May 7, 2001). In addition to new airworthiness standards for transport airplanes and new maintenance requirements, this rule included Special Federal Aviation Regulation No. 88 (''SFAR 88,'' Amendment 21–78, and subsequent Amendments 21–82 and 21–83).

Among other actions, SFAR 88 requires certain type design (i.e. , type certificate (TC) and supplemental type certificate (STC)) holders to substantiate that their fuel tank systems can prevent ignition sources in the fuel tanks. This requirement applies to type design holders for large turbine-powered transport airplanes and for subsequent modifications to those airplanes. It requires them to perform design reviews and to develop design changes and maintenance procedures if their designs do not meet the new fuel tank safety standards. As explained in the preamble to the rule, we intended to adopt airworthiness directives to mandate any changes found necessary to address unsafe conditions identified as a result of these reviews.

In evaluating these design reviews, we have established four criteria intended to define the unsafe conditions associated with fuel tank systems that require corrective actions. The percentage of operating time during which fuel tanks are exposed to flammable conditions is one of these criteria. The other three criteria address the failure types under evaluation: single failures, single failures in combination with a latent condition(s), and in-service failure experience. For all four criteria, the evaluations included consideration of previous actions taken that may mitigate the need for further action.

We have determined that the actions identified in this AD are necessary to reduce the potential of ignition sources inside fuel tanks, which, in combination with flammable fuel vapors, could result in fuel tank explosions and consequent loss of the airplane.

**Relevant Service Information**

Bombardier has issued Service Bulletin 601R–28–053, Revision C, dated March 14, 2006. The actions described in this service information are intended to correct the unsafe condition identified in the MCAI.

**FAA's Determination and Requirements of This Proposed AD**

This product has been approved by the aviation authority of another country, and is approved for operation in the United States. Pursuant to our bilateral agreement with the State of Design Authority, we have been notified of the unsafe condition described in the MCAI and service information referenced above. We are proposing this AD because we evaluated all pertinent information and determined an unsafe condition exists and is likely to exist or develop on other products of the same type design.

**Differences Between This AD and the MCAI or Service Information**

We have reviewed the MCAI and related service information and, in general, agree with their substance. But we might have found it necessary to use different words from those in the MCAI to ensure the AD is clear for U.S. operators and is enforceable. In making these changes, we do not intend to differ substantively from the information provided in the MCAI and related service information.

We might also have proposed different actions in this AD from those in the MCAI in order to follow FAA policies. Any such differences are highlighted in a NOTE within the proposed AD.

**Costs of Compliance**

Based on the service information, we estimate that this proposed AD would affect about 970 products of U.S. registry. We also estimate that it would take about 26 work-hours per product to comply with the basic requirements of this proposed AD. The average labor rate is $80 per work-hour. Required parts would cost about $1,041 per product. Where the service information lists required parts costs that are covered under warranty, we have assumed that there will be no charge for these costs. As we do not control warranty coverage for affected parties, some parties may incur costs higher than estimated here. Based on these figures, we estimate the cost of the proposed AD on U.S. operators to be $3,027,370, or $3,121 per product.

**Authority for This Rulemaking**

Title 49 of the United States Code specifies the FAA's authority to issue rules on aviation safety. Subtitle I, section 106, describes the authority of the FAA Administrator. ''Subtitle VII: Aviation Programs,'' describes in more detail the scope of the Agency's authority.

We are issuing this rulemaking under the authority described in ''Subtitle VII, Part A, Subpart III, Section 44701: General requirements.'' Under that section, Congress charges the FAA with promoting safe flight of civil aircraft in air commerce by prescribing regulations for practices, methods, and procedures the Administrator finds necessary for safety in air commerce. This regulation is within the scope of that authority because it addresses an unsafe condition that is likely to exist or develop on

products identified in this rulemaking action.

**Regulatory Findings**

We determined that this proposed AD would not have federalism implications under Executive Order 13132. This proposed AD would not have a substantial direct effect on the States, on the relationship between the national Government and the States, or on the distribution of power and responsibilities among the various levels of government.

*For the reasons discussed above, I certify this proposed regulation:*

1. Is not a ''significant regulatory action'' under Executive Order 12866;

2. Is not a ''significant rule'' under the DOT Regulatory Policies and Procedures (44 FR 11034, February 26, 1979); and

3. Will not have a significant economic impact, positive or negative, on a substantial number of small entities under the criteria of the Regulatory Flexibility Act.

We prepared a regulatory evaluation of the estimated costs to comply with this proposed AD and placed it in the AD docket.

**List of Subjects in 14 CFR Part 39**

Air transportation, Aircraft, Aviation safety, Safety.

**The Proposed Amendment**

Accordingly, under the authority delegated to me by the Administrator, the FAA proposes to amend 14 CFR part 39 as follows:

## PART 39—AIRWORTHINESS DIRECTIVES

1. The authority citation for part 39 continues to read as follows:

**Authority:** 49 U.S.C. 106(g), 40113, 44701.

**§ 39.13 [Amended]**

2. The FAA amends § 39.13 by adding the following new AD:

**Bombardier, Inc. (Formerly Canadair):** Docket No. FAA–2008–0977; Directorate Identifier 2008–NM–124–AD.

**Comments Due Date**

(a) We must receive comments by October 17, 2008.

**Affected ADs**

(b) None.

**Applicability**

(c) This AD applies to Bombardier Model CL–600–2B19 (Regional Jet Series 100 & 440) airplanes, certificated in any category, as specified in paragraphs (c)(1) and (c)(2) of this AD.

(1) Airplanes having serial numbers 7003 through 7067 and 7069 through 7939 that have not had the modification of the refuel/defuel shutoff valves incorporated according to the original issue of Bombardier Service Bulletin 601R–28–053, dated July 12, 2004;

(2) Airplanes having serial numbers 7989, 7990, and 8000 through 8034.

**Subject**

(d) Air Transport Association (ATA) of America Code 28: Fuel.

**Reason**

(e) The mandatory continuing airworthiness information (MCAI) states:

Bombardier Aerospace has completed a system safety review of the CL–600–2B19 aircraft fuel system against the new fuel tank safety standards, introduced in Chapter 525 of the Airworthiness Manual through Notice of Proposed Amendment (NPA) 2002–043. The identified non-compliances were assessed using Transport Canada Policy Letter No. 525–001 to determine if mandatory corrective action is required.

The assessment showed that insufficient electrical bonding between the refuel/defuel shutoff valves and the aircraft structure could occur due to the presence of a non-conductive gasket (Gask-O-Seal). In addition, it was also determined that the presence of an anodic coating on the shutoff valve electrical conduit connection fitting could affect electrical bonding. The above conditions, if not corrected, could result in arcing and potential ignition source inside the fuel tank during lightning strikes and consequent fuel tank explosion.

To correct the unsafe condition, this directive mandates the modification of the [shutoff valves in the] refuel/defuel system.

**Actions and Compliance**

(f) Unless already done, do the following actions.

(1) Within 5,000 flight hours after the effective date of this AD, modify the refuel/defuel system in the center wing fuel tank in accordance with the Accomplishment Instructions of Bombardier Service Bulletin 601R–28–053, Revision C, dated March 14, 2006.

(2) Modifying the refuel/defuel system is also acceptable for compliance with the requirements of paragraph (f)(1) of this AD if done before the effective date of this AD in accordance with one of the following service bulletins: Bombardier Service Bulletin 601R–28–053, Revision A, dated April 21, 2005; or Revision B, dated September 15, 2005.

**FAA AD Differences**

**Note 1:** This AD differs from the MCAI and/or service information as follows: No differences.

**Other FAA AD Provisions**

(g) The following provisions also apply to this AD:

*(1) Alternative Methods of Compliance (AMOCs):* The Manager, New York Aircraft Certification Office (ACO), FAA, has the authority to approve AMOCs for this AD, if requested using the procedures found in 14 CFR 39.19. Send information to ATTN: Rocco Viselli, Aerospace Engineer, Airframe and Propulsion Branch, ANE–171, FAA, New York ACO, 1600 Stewart Avenue, Suite 410, Westbury, New York 11590; telephone (516) 228–7331; fax (516) 794–5531. Before using any approved AMOC on any airplane to which the AMOC applies, notify your appropriate principal inspector (PI) in the FAA Flight Standards District Office (FSDO), or lacking a PI, your local FSDO.

*(2) Airworthy Product:* For any requirement in this AD to obtain corrective actions from a manufacturer or other source, use these actions if they are FAA-approved. Corrective actions are considered FAA-approved if they are approved by the State of Design Authority (or their delegated agent). You are required to assure the product is airworthy before it is returned to service.

*(3) Reporting Requirements:* For any reporting requirement in this AD, under the provisions of the Paperwork Reduction Act, the Office of Management and Budget (OMB) has approved the information collection requirements and has assigned OMB Control Number 2120–0056.

**Related Information**

(h) Refer to MCAI Canadian Airworthiness Directive CF–2008–20, dated June 12, 2008; and Bombardier Service Bulletin 601R–28–053, Revision C, dated March 14, 2006; for related information.

Issued in Renton, Washington, on September 9, 2008.

**Michael J. Kaszycki,**

*Acting Manager, Transport Airplane Directorate, Aircraft Certification Service.*

[FR Doc. E8–21730 Filed 9–16–08; 8:45 am]

BILLING CODE 4910–13–P

## DEPARTMENT OF HEALTH AND HUMAN SERVICES

## Food and Drug Administration

## 21 CFR Parts 129 and 165

**[Docket No. FDA–2008–N–0446]**

## Beverages; Bottled Water

**AGENCY:** Food and Drug Administration, HHS.

**ACTION:** Proposed rule.

**SUMMARY:** The Food and Drug Administration (FDA) is proposing to amend its bottled water regulations to require that source water, which is currently subject to weekly microbiological testing, be tested specifically for total coliform as is done for finished bottled water products. Further, FDA is proposing that if any coliform organisms are detected in source water or finished bottled water products, bottled water manufacturers would be required to test for the bacterium *Escherichia coli* (*E. coli*), an indicator of fecal contamination. FDA also is proposing to amend the adulteration provision of the bottled water standard to reflect the possibility

of adulteration caused by the presence of filth. Bottled water containing *E. coli* would be considered adulterated, and source water containing *E. coli* would not be considered to be of a safe, sanitary quality and would be prohibited from use in the production of bottled water. In addition, this rule would require bottlers to rectify or eliminate the source of *E. coli* contamination in source water and keep records of such actions. Existing regulatory provisions would require bottled water manufacturers to keep records of new testing required by this rule. FDA tentatively concludes that this proposed rule, if finalized, will ensure that FDA's standards for the minimum quality of bottled water, as affected by fecal contamination, will be no less protective of the public health than those set by the Environmental Protection Agency (EPA) for public drinking water.

**DATES:** Submit written or electronic comments on the proposed rule by November 17, 2008. Submit comments on information collection issues under the Paperwork Reduction Act of 1995 by October 17, 2008 (see the ''Paperwork Reduction Act of 1995'' section of this document). See section XI of the **SUPPLEMENTARY INFORMATION** section of this document for the proposed effective date of the final rule based on the proposed rule.

**ADDRESSES:** You may submit comments, identified by Docket No. FDA–2008–N–0446, by any of the following methods, except that comments on information collection issues under the Paperwork Reduction Act of 1995 must be submitted to the Office of Regulatory Affairs, Office of Management and Budget (OMB) (see the ''Paperwork Reduction Act of 1995'' section of this document).

*Electronic Submissions*

Submit electronic comments in the following way:

- *Federal eRulemaking Portal: http://www.regulations.gov*. Follow the instructions for submitting comments.

*Written Submissions*

Submit written submissions in the following ways:

- *Fax:* 301–827–6870.
- *Mail/Hand delivery/Courier (for paper, disk, or CD–ROM submissions):* Division of Dockets Management (HFA–305), Food and Drug Administration, 5630 Fishers Lane, rm. 1061, Rockville, MD 20852.

To ensure more timely processing of comments, FDA is no longer accepting comments submitted to the agency by e-mail. FDA encourages you to continue to submit electronic comments by using the Federal eRulemaking Portal, as described previously in the **ADDRESSES** portion of this document under *Electronic Submissions*.

*Instructions*: All submissions received must include the agency name and docket number for this rulemaking. All comments received may be posted without change to *http://www.regulations.gov*, including any personal information provided. For additional information on submitting comments, see the ''Comments'' heading in the **SUPPLEMENTARY INFORMATION** section of this document.

*Docket*: For access to the docket to read background documents or comments received, go to *http://www.regulations.gov* and insert the docket number, found in brackets in the heading of this document, into the ''Search'' box and follow the prompts and/or go to the Division of Dockets Management, Food and Drug Administration, 5630 Fishers Lane, rm. 1061, Rockville, MD 20852.

**FOR FURTHER INFORMATION CONTACT:** Lauren Posnick Robin, Center for Food Safety and Applied Nutrition (HFS–317), Food and Drug Administration, 5100 Paint Branch Pkwy., College Park, MD 20740, 301–436–1639.

**SUPPLEMENTARY INFORMATION:**

**Table of Contents**

I. Background
II. EPA's Ground Water Rule
A. Sanitary Surveys
B. Triggered Source Water Monitoring
C. Assessment Source Water Monitoring
D. Corrective Action Treatment Technique Requirements
E. Compliance Monitoring for 4-Log Viral Disinfection
F. Public Notification Requirements
G. Reporting and Recordkeeping Requirements
H. Effective Date of the GWR
III. FDA Standards
A. Standard of Quality
B. Microbiological Quality Standard
C. Current Good Manufacturing Practices
IV. FDA Proposal
A. Proposed Changes
B. Microbiological Quality Standard
C. CGMP Regulations for Bottled Water
D. Analytical Methods for *E. coli* Testing
E. Monitoring and Recordkeeping Provisions of CGMP Regulations for Bottled Water
V. Legal Authority
VI. Environmental Impact Analysis
VII. Executive Order 12866 and Regulatory Flexibility Act
A. Preliminary Economic Impact Analysis
B. Small Entity Analysis
VIII. Paperwork Reduction Act of 1995
IX. Federalism
X. Comments
XI. Effective Date of the Related Final Rule
XII. References

## I. Background

FDA has established specific regulations for bottled water in Title 21 of the Code of Federal Regulations, including standard of identity regulations in part 165 (21 CFR part 165) (§ 165.110(a)) that define different types of bottled water and standard of quality regulations (§ 165.110(b)) that establish allowable levels for contaminants in bottled water. FDA also has established current good manufacturing practice (CGMP) regulations for the processing and bottling of bottled water (part 129 (21 CFR part 129)).

Unlike bottled water, which is regulated as a food by FDA, public drinking water in the United States is regulated by the EPA. The Safe Drinking Water Act (SDWA) (42 U.S.C. 300f *et seq.*), as amended in 1996, requires EPA to publish a National Primary Drinking Water Regulation (NPDWR) that specifies either a maximum contaminant level (MCL) or a treatment technique requirement for contaminants that may ''have an adverse effect on the health of persons,'' are ''known to occur or [have] a substantial likelihood [of occurring] in public water systems with a frequency and at levels of public health concern,'' and for which ''regulation * * * presents a meaningful opportunity for health risk reduction for persons served by public water systems'' (SDWA section 1412(b)(1)(A) (42 U.S.C. 300g–1(b)(1)(A))). Under section 410(b)(1) of the Federal Food, Drug, and Cosmetic Act (the act) (21 U.S.C. 349(b)(1)), not later than 180 days before the effective date of an NPDWR issued by EPA for a contaminant under section 1412 of the SDWA (42 U.S.C. 300g–1), FDA is required to issue a standard of quality regulation for that contaminant in bottled water, or make a finding that such a regulation is not necessary to protect the public health because the contaminant is contained in water in public water systems (PWSs) but not in water used for bottled water. If FDA fails to take action within the prescribed time period in response to the NPDWR issued by EPA, section 410(b)(4)(A) of the act provides that EPA's NPDWR will apply to bottled water.

## II. EPA's Ground Water Rule

In the **Federal Register** of November 8, 2006 (71 FR 65574), EPA published a new NPDWR, the Ground Water Rule (GWR), to provide for increased protection against fecal microbial pathogens in PWSs that use ground water sources (also referred to as ground water systems (GWSs)). In the GWR,

EPA established treatment techniques intended to identify and target GWSs that are susceptible to fecal contamination and require such GWSs to monitor and, when necessary, take corrective action to prevent or remove such contamination. Corrective action can include correcting all significant deficiencies, providing an alternative source of water, eliminating the source of contamination, or providing treatment that reliably achieves at least 4-log (99.00 percent) treatment of viruses (71 FR 65574 at 65602). The GWR also contains compliance monitoring requirements to ensure that treatment effectiveness is maintained when treatment is used as a corrective action, as well as notification requirements when GWS deficiencies occur.

EPA issued the GWR to protect public health because some GWSs may be at risk of supplying water that contains harmful microbial pathogens from fecal contamination. Ingestion of contaminated water can result in gastrointestinal illness, typically characterized by diarrhea, vomiting, nausea, and abdominal discomfort. Most gastrointestinal illnesses are mild and self-limiting, but these diseases can be more serious and potentially fatal in sensitive individuals, such as the elderly, young children, and persons with compromised immune systems. More serious illnesses such as meningitis, hepatitis, Legionnaires' disease, and myocarditis can also result from exposure to waterborne microbial contaminants (71 FR 65574 at 65576 and 65580).

The potential for illness to arise from fecal pathogen-contaminated ground water is demonstrated by data from the Centers for Disease Control and Prevention (CDC) indicating that GWSs were associated with 68 waterborne disease outbreaks and 10,926 illnesses between 1991 and 2000 (71 FR 65574 at 65576). These 68 outbreaks accounted for 51 percent of waterborne disease outbreaks in the United States from 1991 to 2000. The CDC identified source water contamination and inadequate treatment (or treatment failures) as the likely cause of the outbreaks (71 FR 65574 at 65576).

Ground water may also be contaminated with fecal indicators, such as *E. coli*, enterococci, or coliphage. Such fecal indicators typically are not harmful themselves, but their presence demonstrates that there is a pathway for pathogenic enteric viruses (e.g., echovirus, Coxsackie viruses, hepatitis A and E viruses, rotavirus, and noroviruses) and pathogenic enteric bacteria (e.g., *Salmonella*, *Shigella*, *Vibrio cholerae*, and pathogenic strains of *E. coli*) to enter ground water sources (71 FR 65574 at 65576).

In the GWR, EPA reviewed studies that showed the presence of fecal indicators or viral pathogens in dozens of public ground water wells (71 FR 65574 at 65576 and 65583). For example, analysis by EPA of a subset of 15 studies found that approximately 26 percent of the wells included in the studies sometimes have fecal contamination, as indicated by *E. coli*, and approximately 27 percent of the wells sometimes have viral contamination, as indicated by enterovirus (71 FR 65574 at 65583 through 65584).

In the GWR, EPA identified different pathways by which fecal contamination may reach ground water sources. One pathway involves travel through the subsurface to the intake zone of a ground water source, with movement being more likely through materials such as karst, gravel, or fractured bedrock. Potential sources of subsurface fecal contamination include improperly stored or managed manure, runoff from land-applied manure, leaking sewer lines, or failed septic systems (71 FR 65574 at 65581). A second pathway is for fecal contamination from the surface to enter a well along the casing or through cracks in the sanitary seal if the well is not properly constructed, protected, or maintained (71 FR 65574 at 65581).

EPA has found that existing regulatory provisions for GWSs do not adequately address the potential for fecal contamination of ground water sources. Prior to the GWR, there were no Federal regulations requiring monitoring or disinfection of ground water sources or requiring corrective action when fecal contamination or a risk of fecal contamination is found (71 FR 65574 at 65576).

Based on data from ground water-related outbreaks, the occurrence of fecal indicators in ground water sources, and the lack of regulations addressing fecal contamination of ground water sources, EPA concluded that the GWR is necessary to protect public health from potential exposure to bacterial and viral pathogens in fecally contaminated or at-risk ground water sources (71 FR 65574 at 65576).

EPA uses what that agency referred to as a ''risk-targeted'' approach in the GWR to identify public drinking-water GWSs susceptible to fecal contamination and to target those systems that must take corrective action to protect public health. EPA requirements include the following (71 FR 65574 at 65577):

*A. Sanitary Surveys*

Under the GWR, EPA, or States with primacy[1] for enforcing EPA's regulations, are required to perform regular comprehensive sanitary surveys[2] of up to eight components of GWSs: (1) Source; (2) treatment; (3) distribution system; (4) finished water storage; (5) pumps, pump facilities, and controls; (6) monitoring, reporting, and data verification; (7) system management and operation; and (8) operator compliance with State requirements (71 FR 65574 at 65577 and 65586 through 65587). These requirements are codified at 40 CFR 141.401. The purpose of the surveys is to identify ''significant deficiencies'' that are causing or could cause the introduction of contamination into water delivered to consumers. Examples of significant deficiencies related to water sources for GWSs include the following: (1) A well near a source of fecal contamination, such as a failing septic system or a leaking sewer line; (2) a well in a flood zone; (3) an improperly constructed well (e.g., improper surface or subsurface seal); and (4) spring boxes that are poorly constructed and/or subject to flooding. Examples of significant deficiencies related to treatment and finished water storage include inadequate treatment process monitoring and inadequate internal cleaning and maintenance of storage tanks (71 FR 65574 at 65587).

States with primacy must conduct initial sanitary surveys of GWSs by December 31, 2012, or December 31, 2014, depending on the type of GWS and whether certain performance criteria are met,[3] and repeat those surveys every 3 or 5 years, depending on the type of GWS and performance history. GWSs must correct significant

[1] The term ''primacy'' refers to EPA granting a State primary enforcement responsibility for NPDWRs after determining that the State had adopted regulations that are no less stringent than EPA's. *See* 71 FR 65574 at 65579.

[2] For purposes of the EPA GWR, a ''sanitary survey, as conducted by the State, includes but is not limited to, an onsite review of the water source(s) (identifying sources of contamination by using results of source water assessments or other relevant information where available), facilities, equipment, operation, maintenance, and monitoring compliance of a public water system to evaluate the adequacy of the system, its sources and operations and the distribution of safe drinking water.'' *See* 40 CFR 141.401(b).

[3] States are required to complete the initial sanitary survey cycle for community water systems (CWSs) by December 31, 2012 (except those CWSs that meet certain performance criteria), or by December 31, 2014, in the case of all noncommunity water systems (NCWSs) and CWSs that meet certain performance criteria (71 FR 65574 at 65586).

deficiencies identified in the surveys within 120 days of State notification (or be in compliance with a State-approved corrective action plan and schedule). Systems that fail to make corrections will be in violation of treatment technique requirements. GWSs must also notify customers of uncorrected significant deficiencies and timelines for correction (71 FR 65574 at 65586 through 65587).

*B. Triggered Source Water Monitoring*

Triggered source water monitoring is followup monitoring for fecal indicators in source water that occurs when total coliforms are found in distribution systems. The GWR requires GWSs to conduct triggered source water monitoring within 24 hours of receiving notification that a routine monitoring sample collected under the Total Coliform Rule (TCR)[4] is total coliform-positive. Triggered source water monitoring consists of testing at least one ground water sample from each ground water source in use at the time the TCR-positive sample was collected for a fecal indicator. If a triggered sample is fecal-indicator positive, the GWS must notify the State and the public. Unless directed by the State to take immediate corrective action, the GWS then must collect five additional source water samples from the site that tested positive within 24 hours for testing for the same fecal indicator. If any of the five additional samples tests positive for the fecal indicator, the GWS must notify the State and the public and comply with treatment technique requirements (71 FR 65574 at 65577 and 65590 through 65594). The GWR requires States to designate one of three EPA-approved fecal indicators for each GWS: *E. coli*, enterococci, or coliphage. EPA also has approved seven methods for *E. coli* testing, three methods for enterococci, and two methods for coliphage, and specified a minimum 100-milliliter (mL) sample volume (71 FR 65574 at 65597).

The GWR provides exemptions from triggered source water monitoring for systems providing at least 4-log treatment of viruses or when samples are either invalidated or determined to be related to distribution system contamination. The GWR also establishes criteria for representative source water monitoring for GWSs with multiple sources and triggered source monitoring requirements for GWSs that purchase or sell finished drinking water (71 FR 65574 at 65592). The requirements for triggered source water monitoring are codified at 40 CFR 141.402 of EPA's regulations.

*C. Assessment Source Water Monitoring*

The GWR provides States with the option of requiring GWSs at higher risk of fecal contamination to conduct more stringent assessment source water monitoring. Although the exact monitoring scheme is left to the State, EPA recommends collecting and analyzing a minimum of 12 ground water samples representing each month the system is providing water. The fecal indicators and approved methods for assessment monitoring are the same as for triggered source water monitoring (71 FR 65574 at 65594 through 65597). (See 40 CFR 141.402(b) of EPA's regulations.)

*D. Corrective Action Treatment Technique Requirements*

Under the GWR, GWSs are subject to treatment technique requirements to address significant deficiencies identified during sanitary surveys or during monitoring (i.e., fecal contamination in ground water). When a GWS receives notice of a significant deficiency or a fecal indicator-positive sample, the GWS must consult with the State to develop a corrective action schedule within 30 days and complete the State-approved corrective actions within 120 days (or within the timeline approved by the State) (71 FR 65574 at 65601 through 65602).

Corrective action options allowed under the GWR include: (1) Correct significant deficiencies (e.g., repair well pads and sanitary seals), (2) use an alternate water source, (3) eliminate the source of contamination (e.g., provide or fix fencing or housing of wellhead, redirect drainage and runoff), and (4) provide treatment that reliably achieves at least 4-log treatment of viruses (using inactivation, removal, or a State-approved combination of 4-log virus inactivation and removal) (71 FR 65574 at 65602). (See 40 CFR 141.403(a) of EPA's regulations.)

*E. Compliance Monitoring for 4-Log Viral Disinfection*

The GWR establishes compliance monitoring requirements for GWSs that use at least 4-log disinfection treatment of viruses as a corrective action or as an alternative to triggered source water monitoring. GWSs using chemical disinfection must maintain a State-approved residual disinfectant concentration every day the GWS provides water from the source, with exact monitoring requirements depending on system size. If disinfectant concentrations fall below levels required for 4-log viral inactivation for more than 4 hours, the systems will incur a treatment technique violation (71 FR 65574 at 65602). Likewise, systems that use membrane technologies or alternative treatment technologies (such as ultraviolet radiation) for disinfection must meet State requirements for maintaining, operating, and monitoring these technologies. Systems that fail to meet State operation or integrity requirements must correct the problem within 4 hours or be in violation of treatment technique requirements (71 FR 65574 at 65602 through 65603). (See 40 CFR 141.403(b) and 141.404 of EPA's regulations.)

*F. Public Notification Requirements*

The GWR requires GWSs to notify the public if monitoring samples are positive for a fecal indicator, if the GWSs fail to take required corrective actions or follow a State-approved corrective action plan and schedule, or if they fail to maintain 4-log treatment of viruses when they have elected to provide 4-log treatment in lieu of triggered source water monitoring. In addition, GWSs must notify the public if they fail to conduct source water monitoring or if they fail to conduct monitoring to demonstrate compliance with the 4-log disinfection treatment requirement (71 FR 65574 at 65607). (*See also* 40 CFR 141.402(g), 141.403(d), and 141.404(d) of EPA's regulations.) Depending on how soon they take corrective actions, GWSs may also be required to provide annual notice of uncorrected significant deficiencies or fecal-indicator positive source water samples in annual Consumer Confidence Reports or in annual public notices (71 FR 65574 at 65608). (See 40 CFR 141.403(a)(7) of EPA's regulations.)

*G. Reporting and Recordkeeping Requirements*

The GWR also introduces new reporting and recordkeeping requirements for GWSs. New reporting requirements for GWSs include: Reporting completion of corrective actions, reporting failure to meet disinfection compliance requirements for more than 4 hours, and submitting documentation of findings that total coliform positive samples result from distribution system conditions rather than from source water contamination (71 FR 65574 at 65610). New recordkeeping requirements for GWSs include maintaining documentation of

[4] In the Total Coliform Rule (54 FR 27544, June 29, 1989), EPA set both health goals (maximum contaminant level goals or MCLGs) and legal limits (MCLs) for the presence of total coliform in drinking water. The rule also details the type and frequency of testing that water systems must undertake. The rule applies to all PWSs.

the following items: Corrective actions, GWR-related public notices, determinations that total coliform positive samples result from distribution system conditions, disinfection compliance monitoring records, and notifications of TCR-positive samples by systems that sell water to other systems (71 FR 65574 at 65610). The GWR also establishes new reporting, recordkeeping, and primacy requirements that States must meet to assume and maintain enforcement primacy for their PWSs (71 FR 65574 at 65610). (*See* 40 CFR 141.405 of EPA's regulations.)

*H. Effective Date of the GWR*

The compliance date for triggered source water monitoring, compliance monitoring, and treatment technique requirements for GWSs under the GWR is December 1, 2009 (71 FR 65574 at 65577 through 65578). States with primacy for enforcing EPA's regulations have until December 31, 2012, to complete the initial sanitary survey cycle for community water systems (CWSs), except those that meet certain performance criteria, and until December 31, 2014, to complete the initial sanitary survey cycle for all noncommunity water systems (NCWSs) and CWSs that meet certain performance criteria (71 FR 65574 at 65586 through 65587).

## III. FDA Standards

Under section 410(b)(1) of the act, not later than 180 days before the effective date (EPA compliance date) of an NPDWR issued by EPA for a contaminant under section 1412 of the SDWA (42 U.S.C. 300g–1), FDA is required to issue a standard of quality regulation for that contaminant in bottled water or make a finding that such a regulation is not necessary to protect the public health because the contaminant is contained in water in PWSs but not in water used for bottled water. Section 410(b)(3) of the act requires the standard of quality for a contaminant in bottled water to be no less stringent than EPA's MCL and no less protective of the public health than EPA's treatment technique requirements for the same contaminant. The effective date for any such standard of quality regulation is to be the same as the effective date of the NPDWR. If FDA fails to take any action within the prescribed time period in response to the NPDWR issued by EPA, then section 410(b)(4)(A) of the act provides that EPA's NPDWR will apply to bottled water. In addition, section 410(b)(2) of the act provides that a standard of quality regulation issued by FDA shall include monitoring requirements that the agency determines to be appropriate for bottled water.

*A. Standard of Quality*

Under section 401 of the act (21 U.S.C. 341), the agency may issue a regulation establishing a standard of quality for a food under its common or usual name, when in the judgment of the Secretary of Health and Human Services ''such action will promote honesty and fair dealing in the interest of consumers.'' On November 26, 1973 (38 FR 32558), FDA established a standard of quality for bottled water that now is set forth in § 165.110(b).

Manufacturers of bottled water are responsible for ensuring, through appropriate manufacturing techniques and sufficient quality control procedures, that all bottled water products introduced or delivered for introduction into interstate commerce comply with the standard of quality (§ 165.110(b)). Bottled water that is of a quality below the prescribed standard is required by § 165.110(c) to be labeled with a statement of substandard quality or it is deemed misbranded under section 403(h)(1) of the act (21 U.S.C. 343(h)(1)). FDA notes that a statement of substandard quality only prevents bottled water that exceeds an allowable level for a contaminant from being misbranded with regard to that contaminant; it does not prevent the water from being adulterated or otherwise misbranded. This is reflected in FDA's general food standards which state in relevant part that ''[n]o provision of any regulation prescribing a * * * standard of quality * * * shall be construed as in any way affecting the concurrent applicability of the general provisions of the act and the regulations thereunder relating to adulteration and misbranding'' (21 CFR 130.3(c)). In addition, for purposes of emphasis, the regulations currently provide that any bottled water containing a substance at a level that causes the food to be adulterated under section 402(a)(1) of the act (21 U.S.C. 342(a)(1)) is subject to regulatory action, even if the bottled water bears a label statement of substandard quality (§ 165.110(d)).

FDA has in the past most often fulfilled its obligation under section 410 of the act to respond to EPA's issuance of NPDWRs by amending the standard of quality regulations for bottled water to maintain compatibility with EPA's drinking water regulations (e.g., most recently by lowering the allowable level for arsenic (70 FR 33694, June 9, 2005)). In these rules, FDA has found that the relevant EPA standards for particular contaminants in drinking water were generally appropriate as allowable levels for contaminants in the standard of quality for bottled water when bottled water may be expected to contain the same contaminants. Further, because bottled water is increasingly used in some households as a replacement for tap water, consumption patterns considered by EPA for tap water can be used as an estimate for the maximum expected consumption of bottled water by some individuals.

*B. Microbiological Quality Standard*

Under the current standard of quality for bottled water, as set forth in § 165.110(b)(2), bottled water must meet one of the following standards of microbiological quality: (1) By the multiple-tube fermentation (MTF) method, not more than one of the analytical units in the sample shall have a most probable number (MPN) of 2.2 or more coliform organisms per 100 mL and no analytical unit shall have an MPN of 9.2 or more coliform organisms per 100 mL; or (2) by the membrane filter (MF) method, not more than one of the analytical units in the sample shall have 4.0 or more coliform organisms per 100 mL and the arithmetic mean of the coliform density of the sample shall not exceed one coliform organism per 100 mL.

*C. Current Good Manufacturing Practices*

FDA has established CGMP regulations for bottled water in part 129. The CGMPs address source approval, plant construction and design, sanitary facilities and operations, equipment, and production and process controls. Under § 129.35(a)(3)(i), source water obtained from other than a PWS is to be sampled and analyzed for microbiological contaminants at least once each week. To ensure that a plant's production complies with applicable standards, including the standard of quality for bottled water products in § 165.110(b), § 129.80(g)(1) of the CGMP regulations requires bacteriological analysis by the plant, at least once a week, of a representative sample from a batch or segment of a continuous production run for each type of bottled water produced during a day's production. In addition, the CGMPs require maintenance of testing records for 2 years (§ 129.80(g)(3) and (h)).

## IV. FDA Proposal

*A. Proposed Changes*

Ground water is the source water for approximately 70 to 75 percent of U.S. bottled water products (Ref. 1). As a result, the potential for fecal

contamination addressed in the EPA GWR also exists for ground water sources used for bottled water. The potential also exists for bottled water products from ground water sources to be contaminated during processing and for bottled water products from other sources to be contaminated from source water or during processing. Therefore, FDA is proposing to require that source water currently subject to weekly microbiological testing be analyzed specifically for total coliform, as is currently required for finished bottled water products. Further, FDA is proposing that if any coliform organisms are detected in source water or in finished bottled water products, bottled water manufacturers would be required to test for *E. coli*, an indicator of fecal contamination. FDA tentatively concludes that the proposed requirements, as discussed in the following paragraphs, would help ensure that bottled water is subject to requirements no less protective of the public health than the treatment techniques adopted by EPA in the GWR for public drinking water.

1. Finished Bottled Water Testing

The bottled water CGMP regulations contain compliance procedures (§ 129.80(g)) that require that bottlers test a representative sample of finished bottled water at least once a week for bacteriological purposes. The bottled water standard of quality regulations establish allowable levels for total coliform in finished bottled water products (§ 165.110(b)(2)). FDA is proposing that if the total coliform test in finished bottled water products is positive (i.e., even if below the allowable levels for total coliform), bottlers would be required to test for *E. coli*. FDA is proposing to use the presence of any coliform as a trigger for *E. coli* testing, rather than the allowable levels in § 165.110(b)(2), because the presence of any amount of total coliform indicates the potential for fecal contamination. This is consistent with EPA's approach to triggered testing in the GWR. As discussed further in the legal authority section of this document, if bottled water products test positive for *E. coli*, the products would be deemed adulterated under section 402(a)(3) of the act.

2. Source Water Testing

The bottled water CGMPs (§ 129.35(a)(3)) require that bottlers conduct microbiological tests of source water obtained from other than a PWS at least once a week, but do not specify the type of testing (i.e., for what organism) or an allowable level of microbiological contamination. FDA is proposing that bottlers that obtain their water from other than a PWS test their source water at least once a week for total coliform and, if any coliform organisms are detected, that they conduct followup testing for *E. coli*. (PWSs are covered by EPA's GWR and bottlers that obtain their water from a PWS are exempt from source water testing (§ 129.35(a)(3)).) If the followup test is positive for *E. coli*, FDA would consider the source water to be not of a safe, sanitary quality, and therefore its use in bottled water would be prohibited. FDA is proposing to specify that the microbiological testing must be for total coliform to make testing requirements for source and finished bottled water uniform and to remove any uncertainty in the CGMPs about the appropriate microbiological tests for bottlers to conduct. FDA believes that most bottlers currently use total coliform testing to conduct source water tests, as is required for finished product tests in the quality standard. In addition, triggered testing requirements for fecal indicators such as *E. coli* in the EPA GWR are also based on initial total coliform results.

FDA is proposing to require followup source water testing for *E. coli* to increase public health protection by determining whether source water is contaminated and prohibiting use of such water. These requirements would help ensure that bottled water is subject to requirements no less protective of the public health than those applicable to drinking water under the GWR. As noted previously, FDA agrees with EPA's conclusions that ground water sources may be vulnerable to fecal contamination and that such fecal contamination may pose a threat to public health. Based on its concerns, EPA is requiring testing for a fecal indicator (*E. coli*, enterococci, or coliphage) in source water in response to a total coliform positive finding in the distribution system. Similarly, FDA believes that it is appropriate to require *E. coli* testing in response to a total coliform positive finding from weekly source water sampling.

FDA is proposing that source water that tests positive for *E. coli* would not be considered to be of a safe, sanitary quality for bottling, as is required for use in bottled water by § 129.35(a)(1). Therefore, bottlers could not use this water for production of bottled water until they have rectified or otherwise eliminated the source water contamination, and the source water has been retested sufficiently to be considered negative for *E. coli*. FDA is further proposing that a source would be considered negative for *E. coli* after five samples collected from the source over a 24-hour period are tested and found to be *E. coli* negative. FDA solicits comment on alternative criteria for allowing use of source water following an *E. coli* positive test.

This proposal does not include specific requirements regarding how to rectify or otherwise eliminate *E. coli* contamination of source water. Bottlers may wish to consult with States or with EPA, or review EPA guidance (*http://www.epa.gov/safewater/disinfection/gwr/compliancehelp.html*), for advice on how to eliminate sources of contamination.

FDA also did not include a requirement for a sanitary survey in this proposal. First, FDA does not have a primacy program arrangement with the States for conducting sanitary surveys of ground water sources used by bottled water manufacturers, unlike EPA, which has a primacy program with the States under the SDWA for sanitary surveys of ground water sources used by PWSs. Second, the CGMPs for bottled water already require in § 129.35(a)(1) that product water be from an approved source, defined in § 129.3(a) as ''a source of water and the water therefrom, whether it be from a spring, artesian well, drilled well, municipal water supply, or any other source, that has been inspected and the water sampled, analyzed, and found to be of a safe and sanitary quality according to applicable laws and regulations of State and local government agencies having jurisdiction.'' In addition, this proposal requires both weekly source water testing and finished bottled water testing for total coliform, with *E. coli* testing in case of a total coliform positive. In contrast, EPA's GWR, which does require a sanitary survey, does not require source water testing for ground water sources unless total coliform is detected in the distribution system. FDA tentatively concludes that the proposed requirement for weekly source water testing for total coliform (and for *E. coli*, should total coliform be detected) combined with the existing requirement in the CGMPs for source inspection and approval would help ensure that bottled water is subject to requirements no less protective of the public health than those applicable to drinking water under the GWR.

The bottled water CGMPs currently require that bottlers maintain at the plant records regarding any sampling and analysis of source water (§ 129.35(a)(3)(i)), and that such records be maintained at the plant for not less than 2 years (§ 129.80(h)). This requirement would include any records

related to testing and retesting for *E. coli*, in addition to at least weekly testing for total coliform.

FDA also is proposing in § 129.35(a)(3)(i) that bottlers maintain records of corrective measures taken to rectify or otherwise eliminate the cause of *E. coli* contamination in source water. Such records would need to be maintained at the plant for not less than 2 years under § 129.80(h). Examples of appropriate records could include receipts demonstrating that expenses were incurred to have equipment repaired or a memorandum outlining how a source of contamination was identified and removed.

3. Fecal Indicator

Under the GWR, EPA is allowing States with primacy the discretion to designate *E. coli*, enterococci, or coliphage as fecal indicators following a total coliform positive test, noting that the most appropriate indicator, in the context of a PWS, may vary from State to State or site to site (71 FR 65574 at 65597). EPA found that testing for any one of these microorganisms as a single fecal indicator provides a cost-effective means for identifying fecally contaminated wells and protecting public health (71 FR 65574 at 65597). In this proposed rule, FDA is proposing to require a single fecal indicator, *E. coli*, rather than allowing bottlers to choose from among the three fecal indicators identified in the GWR. We believe that requiring that all bottlers test for the same specific fecal indicator will allow FDA to most effectively administer and enforce its bottled water regulations. We have chosen *E. coli* as the appropriate fecal indicator because approved analytical methods for *E. coli* are commercially available, simple, reliable, and inexpensive (see 71 FR 65574 at 65597). We note that EPA believes that *E. coli* will be the fecal indicator most likely designated by States with primacy for implementation of the GWR, because *E. coli* is already used for followup testing under the TCR, and PWSs are familiar with its use and interpretation (71 FR 65574 at 65583).

*B. Microbiological Quality Standard*

Section 129.80(g) of the bottled water CGMPs contains compliance procedures for the standard of quality in § 165.110(b) and requires that bottlers test a representative sample of each type of bottled drinking water produced during a day's production at least once a week for bacteriological purposes. FDA is proposing that *E. coli* shall not be present in bottled water under a new microbiological quality standard in § 165.110(b)(2)(i)(B). Further, under proposed § 129.80(g)(1), if any coliform organisms are detected in a sample of bottled water, bottled water manufacturers would be required to conduct followup testing for the fecal indicator *E. coli*. If *E. coli* is detected, then the batch or daily production run of bottled water represented by the sample would be deemed adulterated under § 165.110(d) of the bottled water standard, as revised.

This followup testing would help ensure the absence of fecal contamination in finished bottled water products and help ensure that bottled water is subject to requirements no less protective of the public health than those applicable to drinking water.

The requirement for bottled water to meet the allowable level for total coliform in the standard of quality unless the label bears a statement of substandard quality under § 165.110(c) for bottled water would remain. The labeling provision would be relevant if bottled water exceeds the total coliform standard but tests negative for *E. coli*. In contrast, because any *E. coli* in bottled water causes the water to be adulterated, the substandard labeling provision is not relevant for *E. coli*.

FDA is also proposing to revise the adulteration provision in § 165.110(d) to clarify the potential application of section 402(a)(3) of the act to bottled water, in addition to section 402(a)(1) of the act. Current § 165.110(d) provides that bottled water containing a substance injurious to health under section 402(a)(1) of the act is deemed to be adulterated, regardless of whether the bottle bears a label statement of substandard quality prescribed by § 165.110(c). Section 402(a)(3) of the act provides another basis for adulteration if the food item ''consists in whole or in part of any filthy, putrid, or decomposed substance, or if it is otherwise unfit for food.'' Section 402(a)(3) would apply, for example, in situations where bottled water is found to be contaminated with *E. coli*. Section 165.110(d) would be revised by adding the phrase ''consists in whole or in part of any filthy, putrid, or decomposed substance, or if it is otherwise unfit for food under section 402(a)(3)'' between the words ''402(a)(1)'' and ''the act.'' To clarify the applicability of § 165.110(d) in cases involving *E. coli*, § 165.110(d) also would be revised by adding the statement: ''If *E. coli* is present in bottled water, then the bottled water will be deemed adulterated under section 402(a)(3) of the act.'' FDA notes that although the regulations as proposed would specifically identify section 402(a)(1) and (a)(3) as applicable to bottled water, other adulteration provisions in section 402 of the act, such as section 402(a)(4) (insanitary conditions) apply as well.

*C. CGMP Regulations for Bottled Water*

FDA is proposing in § 129.35(a)(3)(i) that bottled water manufacturers that obtain their source water from other than a PWS test their source water at least weekly for total coliform and that they conduct followup testing for *E. coli* when source water is total coliform positive. Further, if source water is found to contain *E. coli*, then the water would not be considered water of a safe, sanitary quality as required by § 129.35(a)(1). To make these changes, FDA would revise the CGMP regulations by replacing the phrase ''microbiological contaminants'' with the phrase ''total coliform'' in the second sentence of § 129.35(a)(3)(i), and by adding the following two sentences to the section: ''If any coliform organisms are detected, followup testing must be conducted to determine whether any of the coliform organisms are *Escherichia coli* * * * Source water found to contain *E. coli* is not considered water of a safe, sanitary quality as required for use in bottled water by paragraph (a)(1) of this section.''

FDA is also proposing that a bottler could not use source water found to contain *E. coli* for production of bottled water until the bottler has rectified or otherwise eliminated the source water contamination, and the source water has been sufficiently retested such that it can be considered negative for *E. coli*. To make these changes, FDA would revise the CGMP regulations by adding the following sentences to § 129.35(a)(3)(i): ''The bottler must take appropriate measures to rectify or otherwise eliminate the cause of *E. coli* contamination in a manner sufficient to prevent its reoccurrence. Source water previously found to contain *E. coli* will be considered negative for *E. coli* after five samples collected from the source water supply over a 24-hour period are tested and found to be *E. coli* negative.''

In addition, FDA is also proposing to require that bottlers maintain records of corrective measures taken to rectify or eliminate *E. coli* contamination. To make this change, FDA is revising § 129.35(a)(3)(i) to include ''records describing corrective measures taken in response to a finding of *E. coli*'' among the records required to be maintained on file at bottled water plants. Finally, FDA would revise § 129.35(a)(4)(iv) to include a reference to the potential application of section 402(a)(3) of the act as a basis for adulteration, in

addition to section 402(a)(1), for the reasons discussed previously.

*D. Analytical Methods for E. coli Testing*

In the GWR, EPA listed numerous analytical methods that it had approved for use by PWSs for monitoring source water for *E. coli*, enterococci, and coliphage. However, FDA is not proposing to adopt new analytical methods or to change the allowable levels or testing requirements for total coliform in the current microbiological standard of quality for bottled water. The MTF and MF methods cited in § 165.110(b)(2) would still be appropriate for total coliform testing. The MTF and MF methods are not presence/absence methods, but allow enumeration of total coliform levels, unlike some of the methods approved by EPA in the GWR. The MTF and MF methods also can be used for followup *E. coli* testing, if needed. Therefore, FDA is proposing to cite the existing MTF and MF methods for both total coliform and *E. coli* testing in the new § 165.110(b)(2)(ii). FDA notes that bottlers can use different methods approved by the government agency or agencies having jurisdiction, if they desire. However, FDA will use the MTF and MF methods when it tests products and bottlers that want to use different methods must ensure that their methods give comparable results.

*E. Monitoring and Recordkeeping Provisions of CGMP Regulations for Bottled Water*

Under proposed § 129.35(a)(3)(i) in the CGMP regulations, all source waters other than from a PWS would have to be analyzed by bottled water plants for total coliform at least once each week. Bottlers would also be required to test for *E. coli*, if any coliform organisms are detected in the source water. If *E. coli* is detected in the source water, bottlers would also be required to rectify or otherwise eliminate the source water contamination and subsequently retest for *E. coli*. In addition, under proposed § 129.80(g)(1) in the CGMP regulations, bottlers would have to test finished products for total coliform at least once a week, and for *E. coli*, if any coliform organisms are detected in the finished bottled water.

Section 129.80(h) of the CGMP regulations currently provides that all records required under part 129 shall be maintained at the plant for not less than 2 years and shall be available for official review at reasonable times. The required records include records of analytical results for microbiological tests of both source and finished bottled water. Section 129.80(h) would apply to the new testing requirements for total coliform and *E. coli* for source water and finished bottled water, as well as new recordkeeping relating to measures taken to rectify or otherwise eliminate source water contamination, as discussed previously.

## V. Legal Authority

FDA is proposing changes to both the bottled water standard (§ 165.110) and the bottled water CGMP regulations (part 129). The proposed microbiological quality standard for *E. coli* in finished water is authorized under sections 401 and 410 of the act. Section 401 of the act explicitly provides for the issuance of standards of quality. Further, section 410(b)(1) of the act requires that not later than 180 days before the effective date of an NPDWR issued by EPA for a contaminant under section 1412 of the SDWA (42 U.S.C. 300g–1), FDA is required to issue a standard of quality regulation for that contaminant in bottled water, or make a finding that such a regulation is not necessary to protect the public health because the contaminant is contained in water in PWSs but not in water used for bottled water.

Section 410(b)(3) of the act requires the standard of quality for a contaminant in bottled water to be no less stringent than EPA's MCL and no less protective of the public health than EPA's treatment technique requirements for the same contaminant. In addition, section 410(b)(2) of the act provides that a standard of quality regulation issued by FDA shall include monitoring requirements that the agency determines to be appropriate for bottled water.

On November 8, 2006, EPA published an NPDWR to provide for increased protection against fecal microbiological pathogens in PWSs that use ground water sources. FDA tentatively concludes that this proposed rule, if finalized, will ensure that FDA's standards for the minimum quality of bottled water, as affected by fecal contamination, will be no less protective of the public health than those set by the EPA for public drinking water.

FDA is proposing to revise § 165.110(d), *Adulteration*, of the bottled water standard to provide that bottled water containing *E. coli* is deemed to be adulterated under section 402(a)(3) of the act. Under section 402(a)(3), a food is deemed adulterated if ''it consists in whole or in part of any filthy, putrid, or decomposed substance, or if it is otherwise unfit for food.'' As EPA recognized in its GWR, water that contains *E. coli* is fecally contaminated. Such water consists in part of a ''filthy'' or ''putrid'' substance under section 402(a)(3) of the act. Therefore, if bottled water products test positive for *E. coli*, the products would be adulterated under section 402(a)(3) of the act.

In addition to the change to the bottled water standard, FDA is proposing to amend the bottled water CGMP regulations. FDA is proposing to amend the current requirement in § 129.35(a)(3)(i) of the CGMP regulations to test source water obtained from other than a PWS for microbiological contaminants to specifically identify total coliform as the contaminant subject to mandatory testing. Such testing for total coliform is currently required for finished bottled water by § 129.80(g). The presence of any coliform indicates that the water may contain *E. coli*, an indicator of fecal contamination. Therefore, if either source water or finished water tests positive for total coliform, FDA is proposing to require that the water be tested for *E. coli* (under proposed § 129.35(a)(3)(i) for source water and under proposed § 129.80(g)(1) for finished bottled water) to determine whether it is fecally contaminated. Source water that is fecally contaminated would not be considered water of a safe, sanitary quality under the CGMPs, and therefore its use in bottled water would be prohibited. Finished bottled water that is fecally contaminated would be deemed adulterated under section 402(a)(3), as reflected in proposed § 165.110(d) of the bottled water standard.

After testing indicates that source water is fecally contaminated, FDA is proposing to require that bottlers could not use this water for production of bottled water until they have rectified or otherwise eliminated the source water contamination, and the source water has been retested sufficiently to be considered negative for *E. coli*. FDA is further proposing that a source would be considered negative for *E. coli* after five samples collected from the source over a 24-hour period are tested and found to be *E. coli* negative. Failure to remedy the cause of the contamination would create the possibility of future contamination from the same cause.

FDA's legal authority for these proposed requirements is based on the act's adulteration provisions in section 402(a)(3) and (a)(4), and under section 701(a) of the act (21 U.S.C. 371(a)). As described previously, water containing *E. coli* consists in part of a ''filthy'' or ''putrid'' substance under section 402(a)(3) and is therefore adulterated under section 402(a)(3). Under section 402(a)(4) of the act, a food is adulterated ''if it has been prepared, packed, or held

under insanitary conditions whereby it may have become contaminated with filth, or whereby it may have been rendered injurious to health.'' Failure to ensure the water is prepared, packed, and held under conditions in which water does not become fecally contaminated constitutes an insanitary condition and thus renders the water adulterated under section 402(a)(4) of the act. Under section 701(a) of the act, FDA is authorized to issue regulations for the efficient enforcement of the act. A regulation that requires measures to prevent bottled water from consisting in part of filth and from being prepared, packed, and held under insanitary conditions allows for the efficient enforcement of the act.

FDA's proposal includes a requirement that bottlers maintain records of measures taken to address a positive *E. coli* finding in source water. Records of corrective measures are needed for FDA to determine compliance with the rule's requirement that bottlers take appropriate measures to rectify or otherwise eliminate the cause of *E. coli* contamination in source water. Records would provide assurance to both the bottler and FDA that the risk of water becoming fecally contaminated is being minimized. Failure to take and document these measures would result in a bottler producing water under insanitary conditions whereby the water may become contaminated with filth under section 402(a)(4) of the act.

## VI. Environmental Impact Analysis

The agency has determined under 21 CFR 25.30(h) that this action is of a type that does not individually or cumulatively have a significant effect on the human environment. Therefore, neither an environmental assessment nor an environmental impact statement is required.

## VII. Executive Order 12866 and Regulatory Flexibility Act

### *A. Preliminary Economic Impact Analysis*

FDA has examined the impacts of the proposed rule under Executive Order 12866 and the Regulatory Flexibility Act (5 U.S.C. 601–612), and the Unfunded Mandates Reform Act of 1995 (Public Law 104–4). Executive Order 12866 directs agencies to assess all costs and benefits of available regulatory alternatives and, when regulation is necessary, to select regulatory approaches that maximize net benefits (including potential economic, environmental, public health and safety, and other advantages; distributive impacts; and equity). The agency tentatively concludes that this proposed rule is not a significant regulatory action as defined by the Executive order.

The Regulatory Flexibility Act requires agencies to analyze regulatory options that would minimize any significant impact of a rule on small entities. Because the costs per entity of this rule are small, the agency tentatively concludes that the proposed rule will not have a significant economic impact on a substantial number of small entities. FDA requests comment on the impact of this rule on small entities.

Section 202(a) of the Unfunded Mandates Reform Act of 1995 requires that agencies prepare a written statement, which includes an assessment of anticipated costs and benefits, before proposing ''any rule that includes any Federal mandate that may result in the expenditure by State, local, and tribal governments, in the aggregate, or by the private sector of $100,000,000 or more (adjusted annually for inflation) in any one year.'' The current threshold after adjustment for inflation is $127 million, using the most current (2006) Implicit Price Deflator for the Gross Domestic Product. FDA does not expect this proposed rule to result in any 1-year expenditure that would meet or exceed this amount.

#### 1. Need for Regulation

EPA published the GWR, in part, because data indicated that GWSs are susceptible to fecal contamination. Prior to the GWR, there were no Federal regulations requiring monitoring or disinfection of ground water sources or requiring corrective action when fecal contamination or a risk of fecal contamination is found. The GWR puts in place a regulatory process, including treatment techniques, to identify and target GWSs that are susceptible to fecal contamination, and to require higher risk GWSs to monitor and, when necessary, take corrective action. Under section 410 of the act, FDA is required to respond to the GWR published by EPA by issuing its own standard of quality regulation for bottled water that is no less protective of the public health than the treatment techniques adopted by EPA in the GWR, unless it makes a finding that such additional regulations are not necessary to protect the public health. As noted previously, if FDA fails to take action within the prescribed time period in response to the GWR, then under section 410(b)(4)(A) of the act, EPA's GWR will apply to bottled water. Further, section 410(b)(2) of the act requires that a standard of quality regulation issued by FDA shall include monitoring requirements that the agency determines to be appropriate for bottled water.

EPA determined that there is the potential for ground water to be contaminated with pathogenic bacteria or viruses, or both, and that the presence of fecal indicators can demonstrate a pathway for pathogenic enteric bacteria and viruses to enter GWSs. Ground water sources supply water for 70 to 75 percent of all U.S. bottled water products (Ref. 1). Based on EPA's findings in the GWR, FDA tentatively concludes that the potential for fecal contamination that exists for PWS ground water sources regulated by EPA's GWR also exists for bottled water using ground water sources. The potential also exists for bottled water products from ground water sources to be contaminated during processing and for bottled water products from other sources to be contaminated from source water or during processing.

Dun's Market Identifiers database lists 378 U.S. establishments under North American Industry Classification System (NAICS) code 312112 Bottled Water Manufacturing (69 FR 70082 at 70084, December 2, 2004). These 378 establishments correspond to 318 firms. Because a firm may own more than one establishment and each establishment may be a source, a bottling plant or both, this analysis will assume that each establishment corresponds to one source. Foreign bottled water establishments that produce and export their bottled water products for consumption in the United States will have to meet the same FDA requirements as domestic establishments. FDA is aware of at least 35 major brands of bottled water that are imported into the United States. When sales of a particular brand constitute a significant portion of the market share for this industry, then the brand is considered a major brand. If each imported brand corresponds to one foreign establishment, then an additional 35 foreign establishments will also be affected, giving a total of 413 establishments covered by this rule (Ref. 2). Because FDA assumes that each establishment is equivalent to a single water source, we estimate that 413 bottlers, both domestic and foreign, will be covered by our proposed regulation. FDA asks for comments on these estimates.

#### 2. Regulatory Options

FDA evaluates three regulatory options in this analysis:

*Option 1.* Take no action. If FDA fails to issue a standard of quality regulation or make a finding that such a regulation is not necessary to protect the public

health, then EPA's GWR will apply to bottled water.

*Option 2*. Issue the regulations in this proposed rule, as outlined in Option 3, but remove the existing exemption for weekly microbiological testing of source water from PWSs.

*Option 3*. Issue the regulations in this proposed rule. FDA is proposing to require that source water currently subject to weekly microbiological testing be analyzed specifically for total coliform and if any coliform organisms are detected in source water or in finished bottled water products, then bottled water manufacturers would be required to test for *E. coli*. Source water containing *E. coli* would not be considered to be of a safe, sanitary quality and would be prohibited from use in the production of bottled water until the bottler has taken appropriate measures (as evidenced by records) to rectify or otherwise eliminate the cause of the contamination. Source water previously found to contain *E. coli* would be considered negative for *E. coli* after five samples collected from the source water supply over a 24-hour period are tested and found to be *E. coli* negative. Finished bottled water products containing *E. coli* will be deemed adulterated.

*Costs and Benefits of Options*

*Option 1*. Take no action. If FDA does not issue a regulation by the statutory deadline, EPA's GWR for drinking water would become applicable to bottled water. EPA's GWR is designed for PWSs, which differ in significant ways from bottled water plants. Some of its provisions, such as those that address public water distribution systems, cannot be applied literally to bottled water plants, which do not have such distribution systems. Accordingly, FDA believes that Option 1 is not efficient and therefore less desirable than the proposed option.

*Option 2*. Change the testing requirements for source water and finished bottled water products to include total coliform testing of source water for all bottlers (i.e., remove the existing exemption for weekly microbiological testing of source water from PWSs) and require followup testing for *E. coli* when total coliform positives occur.

Bottlers that obtain their water from PWSs are not required to conduct microbiological testing of their source water under the CGMPs (21 CFR 129.35(a)(3)(i)). FDA considered removing this exemption. This would have the advantage of requiring all bottlers to conduct the same tests (i.e., to test their source water for total coliform) and to conduct followup testing for *E. coli* when total coliform positives occur. However, removing the exemption for weekly microbiological testing of source water would be inefficient because PWSs are already covered by EPA drinking water regulations, including the GWR.

*Option 3*. FDA's proposed action. Each requirement of FDA's proposed action will be evaluated separately in the following order:

1. Require that source water currently subject to weekly microbiological testing be analyzed specifically for total coliform;

2. Require followup testing for *E. coli* when total coliform positives occur in source water or finished bottled water products; and

3. Require bottlers, in the event the source water tests positive for *E. coli*, to rectify or otherwise eliminate the cause of contamination (as evidenced by records), and then retest the source water sufficiently until it is considered negative for *E. coli*. Finished bottled water products that test positive for *E. coli* will be deemed adulterated.

*Option 3 Explained*

1. Require that source water currently subject to weekly microbiological testing be analyzed specifically for total coliform.

The bottled water CGMPs at § 129.35(a)(3)(i) require that bottlers that obtain source water from other than a PWS conduct microbiological tests at least once a week. The CGMPs do not specify what organism to test for or the allowable level of bacterial contamination. FDA is now proposing to specify that bottlers that obtain their water from other than a PWS must test their source water at least once a week for total coliform. FDA expects that most bottlers currently use total coliform testing to conduct these microbiological tests. For example, the Model Code of the International Bottled Water Association (IBWA), a trade association representing a large segment of the bottled water industry, requires total coliform testing of source water (Ref. 3). Furthermore, the 35 foreign producers mentioned in this analysis are members of IBWA. Because microbiological testing is already a requirement of the existing CGMPs and total coliform testing is a widely used test for microbiological quality of water, and also because producers are already required to test for total coliform in finished products, FDA expects that the number of establishments affected by this requirement will be negligible and no additional costs are estimated for this provision.

2. Require followup testing for *E. coli* when total coliform positives occur in source water or finished bottled water products.

As noted previously, FDA proposes to require that bottlers that obtain their water from other than a PWS test their source water at least weekly for total coliform. Finished water products are already required to be tested for total coliform under the existing CGMPs. FDA is now proposing that if any coliform organisms are detected in source water or in finished water products, then the bottler must conduct followup testing for *E. coli*. The presence of any coliform indicates that the water may contain *E. coli*, an indicator of fecal contamination. Further, FDA agrees with EPA's conclusions that ground water sources may be vulnerable to fecal contamination and that such fecal contamination may pose a threat to health. Because ground water is the source water for approximately 75 percent of U.S. bottled water products, the potential for fecal contamination also exists for ground water sources used for bottled water. The potential also exists for finished bottled water products, whether from ground water sources or from other sources such as PWSs, to be contaminated during processing. FDA has determined that it is appropriate to require *E. coli* testing in response to a total coliform positive finding from weekly source and finished bottled water sampling. In this proposal, FDA estimates the costs of *E. coli* testing resulting from a total coliform positive. The estimated costs are based on the probability that the source water or a finished product will test positive for total coliform during any given year.

3. Require bottlers, in the event the source water tests positive for *E. coli*, to rectify or otherwise eliminate the cause of contamination (as evidenced by records), and then retest the source water sufficiently until it is considered negative for *E. coli*. Finished bottled water products that test positive for *E. coli* will be deemed adulterated.

If source water tests positive for *E. coli*, this cost model assumes that bottlers will respond by taking action to rectify or eliminate the source water contamination, by keeping records of those actions, and by retesting the source water sufficiently until it is considered negative for *E. coli*. The source water would be considered negative for *E. coli* after five samples collected from the source over a 24-hour period are tested and found to be *E. coli* negative.

Finished bottled water products that test positive for *E. coli* will be deemed

adulterated under section 402(a)(3) of the act and revised § 165.110(d) of the regulations. Costs to rectify or otherwise eliminate the cause of contamination in finished bottled water products are not estimated in this analysis.

*Per Sample Testing Costs for E. coli*

For purposes of this analysis, FDA assumes that 75 percent of domestic bottled water establishments obtain their water directly from sources other than a PWS ((66 FR 35439 at 35440, July 5, 2001) and (Ref. 1)) and that the other 25 percent obtain their water from PWSs. FDA is assuming that all 35 foreign producers that export bottled water to the United States obtain their water from other than a PWS and are currently testing their sources for total coliform. As mentioned previously, FDA assumes that for all domestic and foreign producers, one establishment corresponds to one source. Thus, an estimated 284 (75 percent) of 378 domestic establishments and all 35 foreign bottled water establishments (284 + 35 = 319) whose products are consumed in the United States obtain their water from other than a PWS and are already conducting total coliform testing of their source water. And approximately 25 percent of the estimated total of 378 domestic bottled water establishments (approximately 95) obtains their water from a PWS.

Table 1 of this document covers *E. coli* testing costs per sample. The estimates of the laboratory fees and testing costs are derived from the GWR (Ref. 4). EPA estimated the national average testing costs per sample for *E. coli* based on 25 to 100 tests conducted annually. The estimated costs per sample can vary depending if the test is conducted in-house or at a commercial laboratory.

TABLE 1—*E. coli* TESTING COSTS PER SAMPLE

| Laboratory Type | Hourly Labor Cost | Labor Hours for Sample Collection | Cost of Sample Collection | Labor Hours for Sample Analysis | Analysis Materials | Per Sample Analysis Cost | Total Costs per Sample |
|---|---|---|---|---|---|---|---|
| In-house | $ 21.44 | .5 | $ 10.72 | .5 | $ 8.95 | $ 19.67 | $ 30.39 |
| Commercial | $ 21.44 | .5 | $ 10.72 | 0 | $ 74.80 | $ 74.80 | $ 85.52 |

For in-house laboratories, the laboratory materials cost per sample is estimated to be $8.95 and the labor cost to be $21.44 for one labor hour per sample (one half hour for collecting and handling the sample and another half hour for conducting the analysis). For an independent commercial laboratory analysis, the test cost per sample would include a shipping and commercial analysis fee of $74.80 and a labor cost of one half hour to collect the sample and arrange for delivery to the laboratory.

FDA is not aware of how many potentially affected establishments will either use in-house testing facilities or outsource testing to commercial laboratories. For the purpose of this analysis, FDA assumes that all large bottlers will use in-house testing facilities and that either 50 percent (low cost assumption) or 100 percent (high cost assumption) of small bottled water establishments will outsource their testing. According to the Small Business Administration's definition of small business for this industry, about 82 percent of bottled water establishments are defined as small (69 FR 70082 at 70088, December 2, 2004). This may overestimate the number of bottlers that will outsource testing and thus may overestimate the cost of the rule. FDA requests comment on this assumption.

Table 2 of this document shows the breakdown of bottlers by the low-cost and high-cost testing models, based on laboratory choice and an 82 percent small business rate. For the 319 bottlers using other than a PWS source, either 188 bottlers (59 percent) will use in-house testing facilities and 131 bottlers (41 percent) will use commercial laboratories or 57 bottlers (18 percent) will use in-house testing facilities and 262 bottlers (82 percent) will use commercial laboratories. For the 95 bottlers using PWS sources, either 56 bottlers (59 percent) will use in-house testing facilities and 39 bottlers (41 percent) will use commercial laboratories or 17 bottlers (18 percent) will use in-house testing facilities and 78 bottlers (82 percent) will use commercial laboratories.

TABLE 2—HIGH COST AND LOW COST ASSUMPTIONS ABOUT THE NUMBER OF BOTTLED WATER ESTABLISHMENTS USING EITHER IN-HOUSE OR COMMERCIAL LABORATORIES

| | Number of Bottlers Using Other Than a PWS Source | | Number of Bottlers Using a PWS Source | |
|---|---|---|---|---|
| | Low Cost | High Cost | Low Cost | High Cost |
| In-house laboratory | 188 (59%) | 57 (18%) | 56 (59%) | 17 (18%) |
| Commercial laboratory | 131 (41%) | 262 (82%) | 39 (41%) | 78 (82%) |
| Total | 319 | 319 | 95 | 95 |

*Total Coliform Frequency Estimates*

To estimate the number of samples that are likely to test positive for total coliform each year, FDA assumes that the frequency of total coliform positive samples is proportional to EPA's total coliform positive frequency estimates (Ref. 5). FDA requests comments on this assumption.

EPA's total coliform positive frequency estimates are dependent on the probability of a total coliform positive, which is dependent on the annual number of samples tested, which varies by system size. FDA requirements would include at least weekly testing for total coliform in source water and finished products, or at least 52 source samples and 52 finished product samples per year. For example, bottlers whose source is other than a PWS would have to test their source water at least once a week and also their finished

product at least once a week. Bottlers whose source is a PWS are only required to test their finished product. (For this model, FDA assumes that each bottler is testing one type of finished product.) EPA found that the frequency rate for total coliform positives in ground water PWSs testing between 31 and 82 samples for total coliform each year ranged between 0.22 and 3 samples per year per system (Ref. 5). FDA assumes that the same frequency rates are applicable to bottled water plants testing 52 samples a year, thus the expected annual frequency rate of total coliform positive samples per bottled water source is, at most, three per year. FDA further assumes that the annual frequency of a total coliform positive for finished product testing is also, at most, three per bottler. For example, bottlers that are conducting total coliform tests for both their source and finished product can expect to find three total coliform positives from their source and three total coliform positives in their finished product or a total of six total coliform positive samples per year. This means that they will need to conduct six tests for *E. coli* in 1 year. Bottlers whose sources are PWSs and are only required to conduct total coliform tests of their finished products can expect three positive samples per year. Combining this information, table 3 of this document shows *E. coli* testing costs for source water and finished bottled water products.

TABLE 3—COSTS OF TESTING SOURCE WATER AND FINISHED BOTTLED WATER PRODUCTS FOR *E. coli*

| | | A | B | C | (A X B X 6) + ( A X C X 3) |
|---|---|---|---|---|---|
| | | Cost per sample | Number of Bottlers Testing Both Source and Finished Product (Six Tests/Year) | Number of Bottlers Testing Only Finished Product (Three Tests/Year) | Total Annual Costs of *E. coli* Testing |
| Low cost assumption | In-house laboratory | $30 | 188 | 56 | $39,000 |
| | Commercial laboratory | $86 | 131 | 39 | $77,000 |
| Total low cost assumption | | | | | $116,000 |
| High cost assumption | In-house laboratory | $30 | 57 | 17 | $12,000 |
| | Commercial laboratory | $86 | 262 | 78 | $154,000 |
| Total high cost assumption | | | | | $166,000 |

[1] Estimates are not exact due to rounding.

Source water that tests positive for *E. coli* would not be considered to be of a safe and sanitary quality for bottling, as required in § 129.35(a)(1), and finished products that test positive for *E. coli* would be considered adulterated under section 402(a)(3) of the act and revised § 165.110(d) of the regulations.

A bottler could not use source water found to contain *E. coli* for production of bottled water until the bottler has rectified or otherwise eliminated the source water contamination, and the source water has been sufficiently retested such that it can be considered negative for *E. coli*. Source water previously found to contain *E. coli* will be considered negative for *E. coli* after five samples collected from the source water supply over a 24-hour period are tested and found to be *E. coli* negative.

This cost model assumes that bottlers will take action to rectify or eliminate source water contamination based on the first positive *E. coli* sample. Thus, the estimated number of bottlers that will find an *E. coli* positive sample per year will be equal to the estimated number of bottlers that will take action to rectify contamination each year. To estimate the number of establishments that are likely to take action to rectify contamination, FDA relied on EPA's estimate of the percentage of PWSs that use ground water sources with identified deficiencies (Ref. 6). EPA's estimate in turn was based on survey data from the Association of State Drinking Water Administrators (ASDWA 1997). FDA lacks better or more recent data. Establishments that have significant deficiencies or that detect fecal contamination are required to take corrective actions under the GWR. The survey responses indicated that 17 percent of systems had wells that were not constructed according to State regulations. FDA uses this percentage as an estimate of the number of systems that will have an *E. coli* positive result in source or product water over a 25-year period. EPA's cost model assumes deficiencies occur equally beginning in year 4 through 25 (22 years) of the analysis, which translates into 0.77 percent of all GWSs taking a corrective action each year over a 22-year period. Thus, of the 319 bottling establishments that use sources other than PWSs, about 53 (17 percent) are likely to take corrective action as a result of an *E. coli* finding in a 22-year period. This translates to 2.5 bottlers every year. For its analysis, FDA also assumes that each of these 2.5 bottlers will incur an *E. coli* positive finding only once in a given year. Table 4 of this document summarizes these estimates.

TABLE 4—NUMBER OF BOTTLERS THAT INCUR AN *E. coli* POSITIVE IN SOURCE WATER AND MUST RECTIFY CONTAMINATION

| | |
|---|---|
| Number of bottlers that use sources other than a PWS | 319 |

TABLE 4—NUMBER OF BOTTLERS THAT INCUR AN *E. coli* POSITIVE IN SOURCE WATER AND MUST RECTIFY CONTAMINATION—Continued

| | |
|---|---|
| Fraction of bottlers with potential source water contamination ( 17 percent/22 years) | 0.0077 |
| Number of bottlers that must rectify contamination each year over a 22-year period | 2.5 |

As stated earlier, source water would be considered negative for *E. coli* after five samples collected from the source over a 24-hour period are tested and found to be negative. Therefore the number of bottlers that will test five more source samples after taking some type of action to rectify contamination is also 2.5. Assuming the retesting is conducted in-house or in a commercial laboratory, total annual costs of retesting five samples for *E. coli* is estimated to be either $380 or $1,069 per year. Table 5 of this document summarizes these estimates.

TABLE 5—TOTAL ANNUAL COSTS OF RETESTING FIVE MORE SAMPLES FOR *E. coli* AFTER A POSITIVE FINDING[1]

| | A | B | A X B X 5 |
|---|---|---|---|
| | Cost per Sample | Number of Bottlers Re-testing Source Water | Total Annual Costs of Re-testing Five Samples for *E. coli* |
| In-house laboratory | $30 | 2.5 | $380 |
| Commercial laboratory | $86 | 2.5 | $1,069 |

[1] Estimates are not exact due to rounding.

*Costs to Rectify Source Water Contamination*

As noted previously, FDA requires bottlers to rectify or otherwise eliminate the source water contamination. FDA drew on EPA's Economic Impact Analysis of the GWR to provide estimates for costs of rectifying or eliminating contamination. EPA estimated costs using a high and low cost distribution. The low cost scenario assumes a greater percentage (60 percent) of systems with significant deficiencies will have less expensive (low-cost) deficiencies to correct. The high cost scenario assumes a greater percentage of systems will have more expensive (high-cost) deficiencies to correct. EPA provides examples of a low-cost deficiency (replacing a sanitary well seal) and a high-cost deficiency (rehabilitating an existing well). Unit costs for these repairs are based on the Technology and Cost Documents for the Final GWR (Ref. 6) and appear here in table 6 of this document. EPA expects that the costs of these significant deficiencies represent the range of costs that establishments would be expected to incur although there are many other corrective actions that could be taken. For example, drilling a new well or purchasing water from a different supplier could be done but in most cases would probably be more expensive than the options listed earlier.

Based on EPA's assumptions, FDA estimates one-time costs to bottlers of rectifying contamination range from approximately $17,000 to $22,000 each year.

TABLE 6—ESTIMATED ANNUAL COSTS OF RECTIFYING CONTAMINATED SOURCES[1]

| Action | Unit cost | Distribution of actions | Number of bottlers that will rectify a contaminated source each year | Total annual costs of recti-fying contami-nated sources |
|---|---|---|---|---|
| Replace a sanitary well seal | $3,627 | .60 | 2.5 | $5,441 |
| Rehabilitate an existing well | $11,986 | .40 | 2.5 | $11,986 |
| Total costs assuming a low-cost distribution (rounding up) | | | | $17,427 |
| Replace a sanitary well seal | $3,627 | .40 | 2.5 | $3,627 |
| Rehabilitate an existing well | $11,986 | .60 | 2.5 | $17,979 |
| Total costs assuming a high-cost distribution (rounding up) | | | | $21,606 |

[1] Estimates are not exact due to rounding.

Based on discussions with experts, EPA suggests that still other corrective actions such as fencing off or limiting access to protective wells could actually cost less than the two options listed previously from their model (Ref. 6).

In addition to the costs of a sanitary well or the costs of rehabilitating an existing well, other potential costs could include product loss, temporarily shutting down the operation, or changing to an alternate source. FDA

has not quantified these costs and requests comments.

*Recordkeeping Costs*

Under this proposed rule, those bottlers that would be required to test their source water and finished bottled water products at least weekly for total coliform (and for *E. coli* if any coliform organisms are detected) would be required to maintain a record of the microbiological test results for at least 2 years under proposed § 129.35(a)(3)(i), as well as current § 129.80(g) and (h) of the CGMP regulations. The current CGMP regulations already reflect the time and associated recordkeeping costs for those bottlers that are required to conduct microbiological testing of their source water, as well as total coliform testing of their finished bottled water products. FDA tentatively concludes that any additional costs in recordkeeping based on the new proposed testing requirements for source water and finished bottled water products would be negligible.

*Summary of Costs*

Total costs for the proposed action, including the estimated annual costs for *E. coli* testing and for rectifying source water contamination, are shown in tables 7 through 11 of this document. Annual testing costs are estimated as either low or high costs depending on the number of bottlers that use either in-house testing laboratories or outsource testing to commercial laboratories. Costs of rectifying source water contamination are estimated using the low and high cost distribution from EPA's Economic Impact Analysis of the GWR.

FDA estimates that 95 establishments that use PWSs are likely to find a total coliform positive three times a year in their finished product and thus will incur testing costs for *E. coli* three times a year as shown in table 7 of this document. Of the 95 bottlers that use PWS sources in table 7, either 56 bottlers (59 percent) will use in-house testing facilities at $30 per sample and 39 bottlers (41 percent) will use commercial laboratories at $86 per sample totaling approximately $15,000 under the low-cost assumption, or about 17 bottlers (18 percent) will use in-house testing facilities at $30 per sample and 78 bottlers (82 percent) will use commercial laboratories at $86 per sample costing about $21,000 under the high-cost assumption.

TABLE 7—ESTIMATED TOTAL ANNUAL AND DISCOUNTED *E. coli* TESTING COSTS TO BOTTLERS THAT USE PWSS[1]

| Total *E. coli* Testing Costs | Annual Costs | Discounted Costs (20 years at 7 percent) |
|---|---|---|
| Number of bottlers with PWS source = 95 | | |
| Total cost of finished product testing (low-cost assumption) | $15,000 | $160,000 |
| Total cost of finished product testing (high-cost assumption) | $21,000 | $230,000 |

[1] Estimates are not exact due to rounding.

FDA estimates that 319 establishments that use sources other than PWSs are likely to find a total coliform positive about six times a year (three times in their source and three times in their finished product) and therefore, will incur testing costs for *E. coli* six times a year as shown in table 8 of this document. Of the 319 bottlers that obtain their water from other than a PWS, 188 bottlers (59 percent) will use in-house testing facilities at $30 per sample and 131 bottlers (41 percent) will use commercial laboratories at $86 per sample totaling approximately $101,000 under the low-cost assumption, and about 57 bottlers (18 percent) will use in-house testing facilities at $30 per sample and 262 bottlers (82 percent) will use commercial laboratories at $86 per sample costing about $145,000 under the high-cost assumption.

TABLE 8—ESTIMATED TOTAL ANNUAL AND DISCOUNTED *E. coli* TESTING COSTS TO BOTTLERS THAT USE SOURCES OTHER THAN PWSS[1]

| *E. coli* Testing Costs | Annual Costs | Discounted Costs (20 years at 7 percent) |
|---|---|---|
| Number of bottlers = 319 | | |
| Total costs of source and finished product testing (low-cost assumption) | $101,000 | $1 million |
| Total costs of source and finished product testing (high-cost assumption) | $145,000 | $1.5 million |

[1] Estimates are not exact due to rounding.

Of the 319 establishments that obtain their water from other than a PWS, it is likely that 2.5 establishments will test positive for *E. coli* annually over 22 years and may need to take corrective action and conduct retesting. Estimated costs to rectify the source water contamination using low and high cost assumptions appear in table 9 of this document.

TABLE 9—ESTIMATED TOTAL ANNUAL AND DISCOUNTED COSTS TO RECTIFY CONTAMINATION[1]

| Costs to Rectify Contamination | Annual Costs | Discounted Costs (20 years at 7 percent) |
|---|---|---|
| Number of bottlers = 2.5 | | |
| Total costs to rectify contamination (low cost) | $17,000 | $185,000 |
| Total costs to rectify contamination (high cost) | $22,000 | $230,000 |

[1] Estimates are not exact due to rounding.

Retesting costs are shown in table 10 of this document and illustrate costs for bottlers that will use either in-house or commercial laboratories.

TABLE 10—ESTIMATED TOTAL ANNUAL AND DISCOUNTED RETESTING COSTS FOR *E. coli*

| Retesting Costs | Annual Costs | Discounted Costs (20 years at 7 percent) |
|---|---|---|
| Number of bottlers | 2.5 | 2.5 |
| Total costs of five additional tests if using in-house laboratory | $380 | $4,000 |
| Total costs of five additional tests if using commercial laboratory | $1,069 | $11,000 |

Table 11 of this document shows the estimated total annual costs of the proposed rule (Option 3) by adding tables 7, 8, 9, and 10 of this document to be $134,000 (low cost) and $189,000 (high cost). The estimated total discounted or present value costs (using 7 percent interest rate over 20-year period) are $1.4 million (low) and $1.9 million (high).

TABLE 11—ESTIMATED TOTAL ANNUAL AND DISCOUNTED COSTS OF PROPOSED RULE

| | Total Annual Costs of Proposed Rule | Total Discounted Costs of Proposed Rule (20 years at 7 percent) |
|---|---|---|
| Low cost | $134,000 | $1.4 million |
| High cost | $189,000 | $1.9 million |

*Benefits*

FDA is not aware of any outbreaks or enforcement actions associated with fecal pathogens in bottled water in the last 10 years. Therefore, we are not able to quantify any public health benefits of this option.

However, while FDA is not aware of any recent outbreaks associated with fecal pathogens in bottled water, this does not mean that such outbreaks could never occur. Under the current FDA regulations, the potential exists for fecal pathogens in ground water to be undetected and be distributed to consumers in bottled water and cause illness. Testing for the fecal indicator *E. coli*, if total coliform is present, and prohibiting *E. coli*-contaminated water from being used as source water or product water, would reduce this potential.

By issuing this regulation, FDA will ensure that FDA's standards for the microbial quality of bottled water will be no less protective of the public health than those set by EPA for public drinking water.

*B. Small Entity Analysis*

FDA examined the economic implications of this proposed rule as required by the Regulatory Flexibility Act (5 U.S.C. 601–612). If a rule has a significant economic impact on a substantial number of small entities, the Regulatory Flexibility Act requires us to analyze regulatory options that would lessen the economic effect of the rule on small entities. This rule may have a significant economic impact on a substantial number of small entities. The Small Business Administration's definition of a small business for NAICS code 312112 Bottled Water Manufacturing, is an entity with 500 or fewer employees. Under this definition, 82 percent of the bottled water firms (260 of 318) in the Dun's Market Identifiers database are identified as small firms (69 FR 70082 at 70088, December 2, 2004). Assuming that 82 percent of total annual costs shown in table 11 of this document will be incurred by small firms, and that 92 percent of the small firms are domestic, then total annual domestic costs of $100,000 to $140,000 will be incurred by the 260 small firms. However, because it is possible that a firm may not find a total coliform positive in any year during a 20-year period, subsequent testing for *E. coli* or taking action to rectify contamination would not be needed and thus, average estimated annual costs per firm can be as low as $380. Average estimated annual costs per firm can be as high as $540 because it is also possible for a firm to incur costs to rectify contamination in any given year over a

20-year period as a result of finding total coliform and *E. coli* positives. This rule will affect a substantial number of small bottled water manufacturers. Although the number of small bottlers affected is large, the average annual costs per business are small. The annual average cost per small bottler (weighted by requirement costs) is summarized in table 12 of this document.

TABLE 12—WEIGHTED AVERAGE ANNUAL COSTS PER SMALL ENTITY[1]

| Annual Costs per Requirement | Weighted Average Annual Costs per Entity | |
|---|---|---|
| | Low Cost | High Cost |
| Number of small firms = 260 | | |
| *E. coli* testing of source water and finished products | $285 | $407 |
| *E. coli* testing finished product only | $50 | $70 |
| *E. coli* retesting | $1 | $3 |
| Costs to rectify contamination | $50 | $60 |
| Average costs per bottler | $380 | $540 |

[1] Estimates are not exact due to rounding.

To investigate the potential significance of these impacts, FDA entered these costs into a model created under contract by Eastern Research Group, Inc. (ERG) (Ref. 7). The model is designed to estimate the percentage of small firms that would go out of business because of compliance costs if those costs accrued to all small firms in a given industry. According to this model, an annual cost of $380 to $540 would generate a near zero percent probability that a small firm with less than 20 employees that faced those costs would go out of business. Because the costs per entity of this rule are small, the agency tentatively concludes that the proposed rule will not have a significant economic impact on a substantial number of small entities. FDA requests comment on the impact of this rule on small entities.

## VIII. Paperwork Reduction Act of 1995

This proposed rule contains information collection provisions that are subject to review by OMB under the Paperwork Reduction Act of 1995 (44 U.S.C. 3501–3520). A description of these provisions is given in the following paragraphs with an estimate of the annual recordkeeping burden. Included in the estimate is the time for reviewing instructions, searching existing data sources, gathering and maintaining the data needed, and completing and reviewing each collection of information.

FDA invites comments on: (1) Whether the proposed collection of information is necessary for the proper performance of FDA's functions, including whether the information will have practical utility; (2) the accuracy of FDA's estimate of the burden of the proposed collection of information, including the validity of the methodology and assumptions used; (3) ways to enhance the quality, utility, and clarity of the information to be collected; and (4) ways to minimize the burden of the collection of information on respondents, including through the use of automated collection techniques, when appropriate, and other forms of information technology.

*Title*: Recordkeeping Due to New Testing Requirements for Bottled Water.

*Description*: The FDA is proposing to amend its bottled water regulations by requiring testing for the fecal indicator *E. coli* if any coliform organisms are detected in a weekly sample of finished bottled water products. FDA also is proposing to amend the adulteration provision of the bottled water standard to indicate that finished product that tests positive for *E. coli* will be deemed adulterated under section 402(a)(3) of the act. In addition, FDA is proposing to amend the CGMP regulations for bottled water by requiring that source water from other than a PWS be tested at least weekly for total coliform. If any coliform organisms are detected in the source water, the bottled water manufacturer would be required to test the source water for *E. coli*. Source water found to contain *E. coli* would not be considered water of a safe, sanitary quality and would be unsuitable for bottled water production until the bottler has taken appropriate measures (as evidenced by records) to rectify or otherwise eliminate the cause of the contamination. Source water previously found to contain *E. coli* would be considered negative for *E. coli* after five samples collected from the source water supply over a 24-hour period are tested and found to be *E. coli* negative.

*Description of Respondents*: This rule would require both domestic and foreign bottled water manufacturers that sell bottled water in the United States to maintain records of *E. coli* testing in addition to existing recordkeeping requirements.

*Burden*: FDA estimates the burden for this information collection in table 13 of this document as follows:

TABLE 13—ESTIMATED ANNUAL RECORDKEEPING BURDEN[1]

| 21 CFR Section | No. of Recordkeepers | Annual Frequency per Record | Total Annual Records | Hours per Record | Total Hours |
|---|---|---|---|---|---|
| § 129.35(a)(3)(i), § 129.80(h) | 319 (bottlers subject to source water and finished product testing) | 6 | 1,914 | 0.08 | 153 |

TABLE 13—ESTIMATED ANNUAL RECORDKEEPING BURDEN[1]—Continued

| 21 CFR Section | No. of Recordkeepers | Annual Frequency per Record | Total Annual Records | Hours per Record | Total Hours |
|---|---|---|---|---|---|
| § 129.80(g), § 129.80(h) | 95 (bottlers testing finished product only) | 3 | 285 | 0.08 | 23 |
| § 129.35(a)(3)(i), § 129.80(h) | 2.5 (bottlers retesting source water) | 5 | 12 | 0.08 | 1 |
| § 129.35(a)(3)(i), § 129.80(h) | 2.5 (bottlers rectifying source water contamination) | 3 | 7.5 | .25 | 2 |
| Total annual burden | | | | | 179 |

[1] There are no capital costs or operating and maintenance costs associated with this collection of information.

The current CGMP regulations already reflect the time and associated recordkeeping costs for those bottlers that are required to conduct microbiological testing of their source water, as well as total coliform testing of their finished bottled water products. FDA tentatively concludes that any additional burden and costs in recordkeeping based on the new proposed testing requirements for source and finished bottled water would be negligible. FDA estimates that the labor burden of keeping records of each test is about 5 minutes per test. FDA is also requiring followup testing of source water and finished bottled water products for *E. coli* when total coliform positives occur. FDA expects that 319 bottlers that use sources other than PWSs may find a total coliform positive sample about three times per year in source testing and about three times in finished product testing, for a total of 153 hours recordkeeping. In addition to the 319 bottlers, about 95 bottlers that use PWSs may find a total coliform positive sample about three times per year in finished product testing, for a total of 23 hours of recordkeeping. Upon finding a total coliform sample, bottlers will then have to conduct a followup test for *E. coli*.

FDA expects that recordkeeping for the followup test for *E. coli* will also take about 5 minutes per test. As shown in table 13 of this document, FDA expects that 2.5 bottlers per year will have to carry out the additional *E. coli* testing, with a burden of 1 hour. These bottlers will also have to keep records about rectifying the source contamination, for a burden of 2 hours. For all expected total coliform testing, *E. coli* testing, and source rectification, FDA estimates a total burden of 179 hours.

The information collection provisions of this proposed rule have been submitted to OMB for review. Interested persons are requested to fax comments regarding information collection by October 17, 2008, to the Office of Information and Regulatory Affairs, OMB. To ensure that comments on information collection are received, OMB recommends that written comments be faxed to the Office of Information and Regulatory Affairs, OMB, Attn: FDA Desk Officer, FAX: 202–395–6974.

## IX. Federalism

FDA has analyzed this proposed rule in accordance with the principles set forth in Executive Order 13132. FDA has determined that the proposed revisions to the standard of quality for bottled water relating to microbiological quality (21 CFR 165.110(b)(2)), if finalized as proposed, would have a preemptive effect on State law. Section 4(a) of the Executive order requires agencies to ''construe * * * a Federal statute to preempt State law only where the statute contains an express preemption provision, or there is some other clear evidence that the Congress intended preemption of State law, or where the exercise of State authority conflicts with the exercise of Federal authority under the Federal statute.'' Section 403A(a)(1) of the act (21 U.S.C. 343–1(a)(1)) provides that ''no State or political subdivision of a State may directly or indirectly establish under any authority or continue in effect as to any food in interstate commerce—(1) any requirement for a food which is the subject of a standard of identity established under section 401 that is not identical to such standard of identity or that is not identical to the requirement of section 403(g) * * *.'' FDA has interpreted this provision to apply to standards of quality (21 CFR 100.1(c)(4)). Although the proposed revisions relating specifically to the standard of quality for bottled water, if finalized as proposed, will have preemptive effect in that it would preclude States from issuing requirements for microbiological testing in bottled water that are not identical to the microbiological testing requirements as set forth in this proposed rule, this preemptive effect is consistent with what Congress set forth in section 403A of the act.

Section 4(c) of the Executive order further requires that ''any regulatory preemption of State law shall be restricted to the minimum level necessary'' to achieve the regulatory objective. Under section 410 of the act, not later than 180 days before the effective date of an NPDWR issued by EPA for a contaminant under section 1412 of the SDWA (42 U.S.C. 300g–1), FDA is required to issue a standard of quality regulation for that contaminant in bottled water or make a finding that such a regulation is not necessary to protect the public health because the contaminant is contained in water in PWSs but not in water used for bottled water. Further, section 410(b)(3) of the act requires a standard of quality for a contaminant in bottled water to be no less stringent than EPA's MCL and no less protective of the public health than EPA's treatment techniques required for the same contaminant. On November 8, 2006, EPA issued an NPDWR containing a risk-targeted approach, including treatment techniques, identifying and targeting GWSs susceptible to fecal contamination (71 FR 65574). FDA has determined that establishing new microbiological testing requirements and standards for source water and bottled water products is appropriate as a response to EPA's action, and is issuing this proposed regulation consistent with section 410 of the act.

Further, section 4(e) of the Executive order provides that ''when an agency proposes to act through adjudication or rulemaking to preempt State law, the agency shall provide all affected State and local officials notice and an opportunity for appropriate participation in the proceedings.'' Given the statutory framework of section 410 of the act for bottled water, EPA's issuance of the GWR provided notice of

possible FDA action to revise the microbiological quality standard for bottled water. FDA did not receive any correspondence from State and local officials regarding possible changes to the microbiological quality standard for bottled water subsequent to EPA's issuance of the GWR. In addition, we are providing an opportunity for State and local officials to comment on proposed changes to the CGMPs and quality standard in the context of this rulemaking. For the reasons set forth previously in this document, the agency believes that it has complied with all of the applicable requirements under the Executive order.

In conclusion, FDA has determined that the preemptive effects of this rule, if finalized, will be consistent with Executive Order 13132.

## X. Comments

Interested persons may submit to the Division of Dockets Management (see **ADDRESSES**) written or electronic comments regarding this document. Submit a single copy of electronic comments or two paper copies of any mailed comments, except that individuals may submit one paper copy. Comments are to be identified with the docket number found in brackets in the heading of this document. Received comments may be seen in the Division of Dockets Management between 9 a.m. and 4 p.m., Monday through Friday.

Please note that on January 15, 2008, the FDA Division of Dockets Management Web site transitioned to the Federal Dockets Management System (FDMS). FDMS is a Government-wide, electronic docket management system. Electronic comments or submissions will be accepted by FDA only through FDMS at *http://www.regulations.gov*.

## XI. Effective Date of the Related Final Rule

The agency intends to make any final rule based on this proposal effective December 1, 2009. The agency will publish a final rule in the **Federal Register** no later than 180 days before the effective date. The agency is providing 180 days before the effective date to permit affected firms adequate time to take appropriate steps to bring their product into compliance with the standard imposed by the new rule.

## XII. References

The following references have been placed on display in the Division of Dockets Management (see **ADDRESSES**) and may be seen by interested persons between 9 a.m. and 4 p.m., Monday through Friday. (FDA has verified the Web site addresses, but FDA is not responsible for any subsequent changes to the Web sites after this document publishes in the **Federal Register**.)

1. International Bottled Water Association, 2007. Personal communication. August 30, 2007.

2. Skipton, S.O., D. Hay, and J.A. Albrecht, ''Drinking Water: Bottled or Tap?'' University of Nebraska of Nebraska-Lincoln, Institute of Agriculture and Natural Resources, G1448, January 2002. Accessed online at *http://www.ianrpubs.unl.edu/epublic/live/g1448/build/g1448.pdf*.

3. International Bottled Water Association, 2005, IBWA Model Code, Version March 2005. Accessed online at *http://www.bottledwater.org/public/pdf/IBWA05ModelCode_Mar2.pdf*.

4. Economic Analysis for the Final Groundwater Rule, Office of Water (4606–M) EPA 85–R–06–014, October 2006, Section 6.2.2 Laboratory Fees. Accessed online at *http://www.epa.gov/safewater/disinfection/gwr/pdfs/support_gwr_economicanalysis.pdf*.

5. Economic Analysis for the Final Groundwater Rule, Office of Water (4606–M) EPA 85–R–06–014, October 2006, Section 4.2.7 Triggered Monitoring Baseline, pp. 4–21 through 4–22. Accessed online at *http://www.epa.gov/safewater/disinfection/gwr/pdfs/support_gwr_economicanalysis.pdf*.

6. Economic Analysis for the Final Groundwater Rule, Office of Water (4606–M) EPA 85–R–06–014, October 2006, Section 6.4.4 Sanitary Survey Corrective Actions, p. 6–33. Accessed online at *http://www.epa.gov/safewater/disinfection/gwr/pdfs/support_gwr_economicanalysis.pdf*.

7. ERG (Eastern Research Group, Inc.), ''Model for Estimating the Impacts of Regulatory Costs on the Survival of Small Businesses and its Application to Four FDA-Regulated Industries,'' Contract No. 223–01–2461, June 7, 2002.

## List of Subjects

*21 CFR Part 129*

Beverages, Bottled water, Food packaging, Reporting and recordkeeping requirements.

*21 CFR Part 165*

Beverages, Bottled water, Food grades and standards, Incorporation by reference.

Therefore, under the Federal Food, Drug, and Cosmetic Act and under authority delegated to the Commissioner of Food and Drugs, it is proposed that 21 CFR parts 129 and 165 be amended as follows:

## PART 129—PROCESSING AND BOTTLING OF BOTTLED DRINKING WATER

1. The authority citation for 21 CFR part 129 continues to read as follows:

**Authority:** 21 U.S.C. 342, 348, 371, 374; 42 U.S.C. 264.

2. Section 129.35 is amended by revising paragraphs (a)(3)(i) and (a)(4)(iv) to read as follows:

### § 129.35 Sanitary facilities.

* * * * *

(a) * * *

(3) * * *

(i) Samples of source water are to be taken and analyzed by the plant as often as necessary, but at a minimum frequency of once each year for chemical contaminants and once every 4 years for radiological contaminants. Additionally, source water obtained from other than a public water system is to be sampled and analyzed for total coliform at least once each week. If any coliform organisms are detected, followup testing must be conducted to determine whether any of the coliform organisms are *Escherichia coli*. This sampling is in addition to any performed by government agencies having jurisdiction. Source water found to contain *E. coli* is not considered water of a safe, sanitary quality as required for use in bottled water by paragraph (a)(1) of this section. The bottler must take appropriate measures to rectify or otherwise eliminate the cause of *E. coli* contamination in a manner sufficient to prevent its reoccurrence. Source water previously found to contain *E. coli* will be considered negative for *E. coli* after five samples collected from the source water supply over a 24-hour period are tested and found to be *E. coli* negative. Records of approval of the source water by government agencies having jurisdiction, records of sampling and analyses for which the plant is responsible, and records describing corrective measures taken in response to a finding of *E. coli* are to be maintained on file at the plant.

* * * * *

(4) * * *

(iv) The finished bottled water must comply with bottled water quality standards (§ 165.110(b) of this chapter) and section 402(a)(1) and (a)(3) of the Federal Food, Drug, and Cosmetic Act dealing with adulterated foods.

* * * * *

3. Section 129.80 is amended by revising paragraph (g)(1) to read as follows:

### § 129.80 Processes and controls.

* * * * *

(g) * * *

(1) For bacteriological purposes, take and analyze at least once a week for total coliform a representative sample from a batch or segment of a continuous production run for each type of bottled drinking water produced during a day's

production. The representative sample shall consist of primary containers of product or unit packages of product. If any coliform organisms are detected, followup testing must be conducted to determine whether any of the coliform organisms are *E. coli*.

* * * * *

## PART 165—BEVERAGES

4. The authority citation for 21 CFR part 165 continues to read as follows:

**Authority:** 21 U.S.C. 321, 341, 343, 343–1, 348, 349, 371, 379e.

5. Section 165.110 is amended by revising paragraphs (b)(2), (c)(1), and (d) to read as follows:

**§ 165.110 Bottled water.**

* * * * *

(b) * * *

(2) *Microbiological quality*.

(i) Bottled water shall, when a sample consisting of analytical units of equal volume is examined by the methods described in paragraph (b)(2)(ii) of this section, meet the following standards of microbiological quality:

(A) *Total coliform*.

(*1*) *Multiple-tube fermentation (MTF) method*. Not more than one of the analytical units in the sample shall have a most probable number (MPN) of 2.2 or more coliform organisms per 100 milliliters and no analytical unit shall have an MPN of 9.2 or more coliform organisms per 100 milliliters; or

(*2*) *Membrane filter (MF) method*. Not more than one of the analytical units in the sample shall have 4.0 or more coliform organisms per 100 milliliters and the arithmetic mean of the coliform density of the sample shall not exceed one coliform organism per 100 milliliters.

(B) *E. coli*. No *E. coli* shall be detected. If *E. coli* is present, then the bottled water will be deemed adulterated under paragraph (d) of this section.

(ii) Analyses conducted to determine compliance with paragraphs (b)(2)(i)(A) and (b)(2)(i)(B) of this section and § 129.35(a)(3)(i) of this chapter shall be made in accordance with the multiple-tube fermentation (MTF) or the membrane filter (MF) method described in the applicable sections of ''Standard Methods for the Examination of Water and Wastewater,'' 20th Ed. (1998), American Public Health Association. The Director of the Federal Register approves this incorporation by reference in accordance with 5 U.S.C. 552(a) and 1 CFR part 51. You may obtain a copy from the American Public Health Association, 800 I St. NW., Washington, DC 20001. You may inspect a copy at the Center for Food Safety and Applied Nutrition's Library, 5100 Paint Branch Pkwy., College Park, MD 20740, or at the National Archives and Records Administration (NARA). For information on the availability of this material at NARA, call 202–741–6030, or go to: *http://www.archives.gov/federal_register/code_of_federal_regulations/ibr_locations.html*.

* * * * *

(c) * * *

(1) ''Contains Excessive Bacteria'' if the bottled water fails to meet the requirements of paragraph (b)(2)(i)(A) of this section.

* * * * *

(d) *Adulteration*. Bottled water containing a substance at a level considered injurious to health under section 402(a)(1) of the act, or that consists in whole or in part of any filthy, putrid, or decomposed substance, or that is otherwise unfit for food under section 402(a)(3) of the act is deemed to be adulterated, regardless of whether or not the water bears a label statement of substandard quality prescribed by paragraph (c) of this section. If *E. coli* is present in bottled water, then the bottled water will be deemed adulterated under section 402(a)(3) of the act.

Dated: September 10, 2008.

**Jeffrey Shuren,**

*Associate Commissioner for Policy and Planning.*

[FR Doc. E8–21619 Filed 9–16–08; 8:45 am]

BILLING CODE 4160–01–S

---

## DEPARTMENT OF THE TREASURY

### Internal Revenue Service

### 26 CFR Part 1

**RIN 1545–BB67**

**[REG–157711–02]**

## Unified Rule for Loss on Subsidiary Stock

**AGENCY:** Internal Revenue Service (IRS), Treasury.

**ACTION:** Partial withdrawal of notice of proposed rulemaking.

**SUMMARY:** This document withdraws proposed regulations relating to the application of section 362(e)(2) to intercompany transactions and to certain modifications to the investment adjustment rules.

**FOR FURTHER INFORMATION CONTACT:** Marcie P. Barese, (202) 622–7790 (not a toll-free number).

**SUPPLEMENTARY INFORMATION:**

### Background and Explanation of Provisions

On January 23, 2007, the IRS and Treasury Department published a notice of proposed rulemaking in the **Federal Register** (72 FR 2964) under § 1.1502–36 (Unified Loss Rule). The proposed regulations provided rules under § 1.1502–13(e)(4) that would suspend the application of section 362(e)(2) in the case of intercompany transactions. The proposed regulations also provided rules under § 1.1502–32(c)(1)(ii) relating to the treatment of items attributable to property transferred in an intercompany section 362(e)(2) transaction.

After consideration of the comments received responding to the notice of proposed rulemaking, the IRS and Treasury Department have concluded that the proposed rules would not be promulgated and, instead, that final regulations would make section 362(e)(2) generally inapplicable to intercompany transactions. Accordingly, §§ 1.1502–13(e)(4) and 1.1502–32(c)(1)(ii) of the proposed regulations are hereby withdrawn.

### List of Subjects in 26 CFR Part 1

Income taxes, Reporting and recordkeeping requirements.

### Partial Withdrawal of Proposed Regulations

Accordingly, under the authority of 26 U.S.C. 7805, proposed §§ 1.1502–13(e)(4) and 1.1502–32(c)(1)(ii) published in the **Federal Register** on January 23, 2007 are withdrawn.

**Linda E. Stiff,**

*Deputy Commissioner for Services and Enforcement.*

[FR Doc. E8–21005 Filed 9–9–08; 4:15 pm]

BILLING CODE 4830–01–P

---

## DEPARTMENT OF THE INTERIOR

### Minerals Management Service

### 30 CFR Part 250

**[Docket ID: MMS–2008–OMM–0023]**

**RIN 1010–AD50**

## Technical Changes to Production Measurement and Training Requirements

**AGENCY:** Minerals Management Service (MMS), Interior.

**ACTION:** Proposed rule.

**SUMMARY:** This proposed rule would revise the production measurement regulations to establish meter proving,

meter verification/calibration, and well test requirements after hurricanes and other events beyond the control of the lessee. This rulemaking would eliminate some reporting burden on industry, and it would eliminate the need for MMS to grant waivers to the reporting requirements in certain situations. The proposed rule would also add new definitions providing clarity in the training regulations, which should lead to improved training of Outer Continental Shelf workers.

**DATES:** Submit comments by November 17, 2008. The MMS may not fully consider comments received after this date. Submit comments to the Office of Management and Budget on the information collection burden in this rule by October 17, 2008. This does not affect the deadline for the public to comment to MMS on the proposed regulations.

**ADDRESSES:** You may submit comments on the rulemaking by any of the following methods. Please use the Regulation Identifier Number (RIN) 1010–AD50 as an identifier in your message. See also Public Availability of Comments under Procedural Matters.

- *Use the Federal eRulemaking Portal: http://www.regulations.gov.* Under the tab ''More Search Options,'' click Advanced Docket Search, then select ''Minerals Management Service'' from the agency drop-down menu, then click ''submit.'' In the Docket ID column, select MMS–2008–OMM–0023 to submit public comments and to view supporting and related materials available for this rulemaking. Information on using *Regulations.gov*, including instructions for accessing documents, submitting comments, and viewing the docket after the close of the comment period, is available through the site's ''User Tips'' link. The MMS will post all comments received in response to this proposed rulemaking on the Portal.
- *Mail or hand-carry comments to the Department of the Interior; Minerals Management Service; Attention:* Regulations and Standards Branch (RSB); 381 Elden Street, MS–4024; Herndon, Virginia 20170–4817. Please reference ''Technical Changes to Production Measurement and Training Requirements, 1010–AD50'' in your comments and include your name and return address.
- *Send comments on the information collection in this rule to:* Interior Desk Officer 1010–AD50, Office of Management and Budget; 202–395–6566 (fax); e-mail: *oira_docket@omb.eop.gov*. Please also send a copy to MMS at the address above.

**FOR FURTHER INFORMATION CONTACT:** Richard Ensele, Regulations and Standards Branch, at (703) 787–1583.

**SUPPLEMENTARY INFORMATION:** This proposed rule revises two subparts in 30 CFR part 250: Subpart L, Oil and Gas Production Measurement, Surface Commingling, and Security; and Subpart O, Well Control and Production Safety Training. The revisions to subpart L are minor, and should result in savings to lessees and to MMS. The revisions to subpart O are also minor, and are meant to clarify existing requirements. The following is a brief description of the revisions:

## Revisions to Subpart L—Oil and Gas Production Measurement, Surface Commingling, and Security

The current regulations in subpart L require lessees to provide:

- Monthly meter provings of all liquid hydrocarbon royalty meters to determine the meter factor;
- Monthly provings of liquid allocation meters if they measure 50 or more barrels per day, per meter, and quarterly if they measure less than 50 barrels per day, per meter;
- Monthly calibration of all gas meters; and
- Bimonthly (every two months) well tests for allocation purposes.

When production resumes following a force majeure event, additional time is often needed to accomplish the above-mentioned regulatory compliance actions. This proposed rule would provide up to 15 days following production start-up to accomplish these tasks in those instances where the interruption was caused by a force majeure event. This would reduce the number of waiver requests immediately following the restoration of production and accordingly result in minor savings to industry.

A force majeure event in this case would be an event beyond the control of the lessee such as war, act of terrorism, crime, or act of nature such as a hurricane, which would prevent the lessee from operating the wells and meters on its Outer Continental Shelf (OCS) facility. The lessee would be required to conduct the actions listed above within 15 days of the meter or well being returned to service.

This proposed revision would eliminate the need for lessees to request the waiver currently required, but only in the case of force majeure events. This would result in minor savings to industry by eliminating paperwork, and it would eliminate the need for MMS to respond to the requests for waivers.

A new definition for the term *force majeure event* would be added to § 250.1201. In addition, this proposed rulemaking would revise § 250.1202(d)(3), § 250.1202(k)(3) and (k)(4), § 250.1203(c)(1), and § 250.1204(b)(1) by adding language that would require the lessee to conduct the actions in each subsection within 15 days of resuming production operations after a force majeure event precluded those actions.

## Revisions to Subpart O—Well Control and Production Safety Training

The regulations in subpart O have been in effect since August 2000. Since that time, MMS has conducted over 3,000 interviews with offshore workers, conducted 118 audits of training programs, and administered 6 tests of offshore workers. Initially, the interviews showed that the offshore workers understood their specific jobs from a training point of view. More recent interviews (since mid-2006), which were conducted with a new interview form that posed more probing questions, indicated that the workers had a poorer understanding of MMS regulations and the training requirements.

The audits were conducted by MMS between October 2002 and December 2007 and resulted in the issuance of 71 incidents of noncompliance (INCs). The majority of the INCs were related to the contractor workforce (48 percent) and to recordkeeping and documentation (32 percent). In general, the audits indicated a lack of understanding of the requirements for training of contractor personnel and periodic training of all personnel. To address this lack of understanding, we have added a definition of periodic, which includes a reminder that the lessee is responsible for defining the interval for periodic training. We have also added a definition of contractor so that there is no doubt about which personnel need to be trained.

The MMS administered 6 tests of offshore workers during 2006, 3 production safety tests and 3 well-control tests. The grades ranged from 39 percent to 76 percent correct. The MMS considers 70 percent a passing grade. Of the 6 employees tested, 5 failed this test. The results indicated a lack of understanding of MMS requirements and a lack of understanding of how to perform the calculations needed in their jobs. Both of these problems could be corrected by improved periodic training conducted by the lessee.

In this rulemaking, MMS is proposing four minor changes to subpart O. The proposed rule would revise the definition of *production safety* in § 250.1500, and add definitions for

*periodic* and *contractor* to that section. The fourth change removes § 250.1502. Section 250.1502 was intended to give lessees and operators a transition period for complying with the new regulations. Since this transition period has been completed for more than 5 years, we are removing the section from the regulation.

The MMS is proposing to add language to the definition of production safety to include separation, dehydration, compression, sweetening, and metering operations. There have been indications that some offshore personnel did not include those operations in training for production safety. This new definition makes it very clear that those operations are included in production safety.

The MMS is proposing to add a definition of periodic. As discussed previously, there has been a problem with compliance with the periodic training requirements. In the definition, we stress that each lessee must specify the intervals for periodic training of personnel and periodic assessment of training needs.

The MMS is also proposing to add a definition of contractor to the regulations so that there is no question as to which contractor personnel must be trained in well-control and production safety.

**Procedural Matters**

*Regulatory Planning and Review (Executive Order (E.O.) 12866)*

This proposed rule is not a significant rule as determined by the Office of Management and Budget (OMB) and is not subject to review under E.O. 12866.

(1) This proposed rule would not have an annual effect of $100 million or more on the economy. It would not adversely affect in a material way the economy, productivity, competition, jobs, the environment, public health or safety, or State, local, or tribal governments or communities. The revisions to the production measurement regulations would only have a very small positive effect on industry in the event of a hurricane or other incident beyond the control of the lessee. The revised and new definitions in the training regulations could cause some lessees and operators to revise their training plans. The MMS estimates that 50 of the potential 130 lessees and/or operators have already modified their training plans and will not be affected by the proposed changes to the definitions in subpart O. The remaining 80 operators would have to modify their training plans. Of those 80 operators, MMS estimates that 56 are small businesses, and that 24 are large companies. The majority of small operators have an off-the-shelf type training plan. The MMS estimates that a modification to this type of plan would cost about $500. The large companies would most likely revise their training plans in-house at a slightly lower cost than revising an off-the-shelf plan. For the purpose of estimating the total cost to industry, MMS will use the higher estimate. The total cost for revising training plans to industry would be $500 multiplied by 80 operators, which would equal $40,000. The cost to retrain the employees from the 80 companies would be about $200 per person. This is based on the price of a typical 3-day production operations safety course costing $600 per person (i.e., $200 per person per day). Adding 1 day to the course would be necessary to cover the operations mentioned in the revised definition of production operations. The MMS estimates that 4 employees per company would need the additional day of training, so the additional cost would be $200, multiplied by 4 employees per company, multiplied by 80 companies, which would equal $64,000. The total cost to industry from the subpart O changes would be $40,000 plus $64,000, which would equal $104,000. Therefore, this proposed rule would not have a significant economic effect on industry.

(2) This proposed rule would not create a serious inconsistency or otherwise interfere with an action taken or planned by another agency.

(3) This proposed rule would not alter the budgetary effects of entitlements, grants, user fees, or loan programs or the rights or obligations of their recipients.

(4) This proposed rule would not raise novel legal or policy issues.

*Regulatory Flexibility Act*

The Department of the Interior certifies that this proposed rule would not have a significant economic effect on a substantial number of small entities under the Regulatory Flexibility Act (5 U.S.C. 601 *et seq.*).

The production measurement changes proposed in the rule would affect lessees and operators of leases in the OCS. This could include about 130 active Federal oil and gas lessees. Small lessees that operate under this rule fall under the Small Business Administration's (SBA) North American Industry Classification System (NAICS) codes 211111, Crude Petroleum and Natural Gas Extraction, and 213111, Drilling Oil and Gas Wells. For these NAICS code classifications, a small company is one with fewer than 500 employees. Based on these criteria, an estimated 70 percent of these companies are considered small. This proposed rule, therefore, would affect a substantial number of small entities.

The proposed changes to subpart L would not have a significant economic effect on a substantial number of small entities because the effects would only occur if a facility is rendered out-of-service because of a hurricane or other event out of the control of the lessee. The overall effects would be very minor, but positive since the proposed rule temporarily relieves the lessee of specific reporting requirements related to metering and well tests.

The revised and new definitions in the training regulations in subpart O could cause some lessees and operators to revise their training plans. The MMS estimates that 80 operators would have to modify their training plans due to the proposed changes to the definition of production operations. Of the 80 operators, MMS estimates that 56 are small businesses. This is a substantial number of small operators. The majority of small operators have off-the-shelf type training plans. The MMS estimates that a modification to this type of plan would cost about $500. The total cost to the small operators would be $500 multiplied by 56 operators, which would equal $28,000. The cost to retrain the employees from the 56 companies would be about $200 per person. This is based on the price of a typical 3-day production operations safety course costing $600 per person. Adding one day to the course would be necessary to cover the operations mentioned in the revised definition of production operations. The MMS estimates that 4 employees per company would need the additional day of training, so the additional cost would be $200, multiplied by 4 employees per company, multiplied by 56 companies, which would equal $44,800. The total cost to small businesses due to the changes in the subpart O regulations would be $28,000 plus $44,800, which would equal $72,800. Therefore, this proposed rule would not have a significant economic effect on a substantial number of small entities.

Your comments are important. The Small Business and Agriculture Regulatory Enforcement Ombudsman and 10 Regional Fairness Boards were established to receive comments from small businesses about Federal agency enforcement actions. The Ombudsman will annually evaluate the enforcement activities and rate each agency's responsiveness to small business. If you wish to comment on the actions of MMS, call 1–888–734–3247. You may comment to the Small Business Administration without fear of

retaliation. Disciplinary action for retaliation by an MMS employee may include suspension or termination from employment with the DOI.

*Small Business Regulatory Enforcement Fairness Act*

The proposed rule is not a major rule under 5 U.S.C. 804(2) of the Small Business Regulatory Enforcement Fairness Act. This proposed rule:

a. Would not have an annual effect on the economy of $100 million or more. The effects of the subpart L changes are minor, but positive, and would only occur if there were a hurricane or other event beyond the lessee's control that would cause the temporary shut-in of a facility. The effects on small business of the subpart O changes are approximately $73,000.

b. Would not cause a major increase in costs or prices for consumers, individual industries, Federal, State, or local government agencies, or geographic regions. As stated above, any effects from the subpart L changes would be positive for the industry and the Federal government, and the effects from the subpart O changes would be minor.

c. Would not have significant adverse effects on competition, employment, investment, productivity, innovation, or the ability of U.S.-based enterprises to compete with foreign-based enterprises. The effects would be a result of temporary relief of reporting requirements and minor changes in training requirements, so there would be no adverse effects on competition, employment, investment, productivity, innovation, or the ability of U.S.-based enterprises to compete with foreign-based enterprises.

*Unfunded Mandates Reform Act*

This proposed rule would not impose an unfunded mandate on State, local, or tribal governments or the private sector of more than $100 million per year. The proposed rule would not have a significant or unique effect on State, local, or tribal governments or the private sector. A statement containing the information required by the Unfunded Mandates Reform Act (2 U.S.C. 1531 *et seq.*) is not required.

*Takings Implication Assessment (E.O. 12630)*

Under the criteria in E.O. 12630, this proposed rule does not have significant takings implications. The proposed rule is not a governmental action capable of interference with constitutionally protected property rights. A Takings Implication Assessment is not required.

*Federalism (E.O. 13132)*

Under the criteria in E.O. 13132, this proposed rule does not have sufficient federalism implications to warrant the preparation of a Federalism Assessment. This proposed rule would not substantially and directly affect the relationship between the Federal and State governments. To the extent that State and local governments have a role in OCS activities, this proposed rule would not affect that role. A Federalism Assessment is not required.

*Civil Justice Reform (E.O. 12988)*

This proposed rule complies with the requirements of E.O. 12988. Specifically, this rule:

(a) Meets the criteria of section 3(a) requiring that all regulations be reviewed to eliminate errors and ambiguity and be written to minimize litigation; and

(b) Meets the criteria of section 3(b)(2) requiring that all regulations be written in clear language and contain clear legal standards.

*Consultation With Indian Tribes (E.O. 13175)*

Under the criteria in E.O. 13175, we have evaluated this proposed rule and determined that it has no potential effects on federally recognized Indian tribes. There are no Indian or tribal lands in the OCS.

*Paperwork Reduction Act (PRA)*

This proposed rule contains a collection of information that is being submitted to OMB for review and approval under § 3507(d) of the PRA. As part of our continuing effort to reduce paperwork and respondent burdens, MMS invites the public and other Federal agencies to comment on any aspect of the reporting and recordkeeping burden. If you wish to comment on the information collection aspects of this proposed rule, you may send your comments directly to OMB (see the **ADDRESSES** section of this notice). Please identify your comments with 1010–AD50. Send a copy of your comments to the Regulations and Standards Branch (RSB), Comments; 381 Elden Street, MS–4024; Herndon, Virginia 20170–4817. You may obtain a copy of the supporting statement for the new collection of information by contacting the Bureau's Information Collection Clearance Officer at (202) 208–7744.

The PRA provides that an agency may not conduct or sponsor, and a person is not required to respond to, a collection of information unless it displays a currently valid OMB control number. The OMB is required to make a decision concerning the collection of information contained in these proposed regulations between 30 to 60 days after publication of this document in the **Federal Register**. Therefore, a comment to OMB is best assured of having its full effect if OMB receives it by October 17, 2008. This does not affect the deadline for the public to comment to MMS on the proposed regulations.

The title of the collection of information for the rule is ''Technical Changes to Production Measurement and Training Requirements.''

Respondents include approximately 130 Federal OCS oil and gas lessees and/or operators. Responses to this collection are mandatory. The frequency of reporting is on occasion. The information collection does not include questions of a sensitive nature. The MMS will protect information according to the Freedom of Information Act (5 U.S.C. 552) and its implementing regulations (43 CFR part 2) and 30 CFR 250.197, ''Data and information to be made available to the public or for limited inspection.''

The collection of information required by the current 30 CFR part 250, subpart L regulations, Oil and Gas Production Measurement, Surface Commingling, and Security, is approved under OMB Control Number 1010–0051, expiration 7/31/10 (8,533 hours). The proposed regulation would not impose any new information collection burdens. However, it does reduce the number of general departure requests for § 250.1204(b)(1). When the rule becomes effective, we will submit to OMB a justification for non-substantive change to make an adjustment decrease to the paperwork burden.

The collection of information required by the current 30 CFR part 250 subpart O regulations, Well Control and Production Safety Training, is approved under OMB Control Number 1010–0128, expiration 8/31/09 (2,106 hours). The proposed rule would require some lessees and/or operators to modify their current training programs due to the proposed changes to the definitions in subpart O. We estimate that this would be a one-time paperwork burden on 24 operators who will modify their programs in-house for a total of 144 burden hours. Those operators who purchase their off-the-shelf training programs will incur costs to modify the programs. This is considered a regulatory cost of doing business and is not a paperwork burden.

| Citation 30 CFR part 250 subpart O | Reporting & recordkeeping requirement | Hour burden | Average number of annual responses | Annual burden hours |
|---|---|---|---|---|
| 1503(b), (c) | Develop training plans. Note: Existing lessees/respondents already have training plans developed. This number reflects development of plans for any new lessees. | 60 | 2 | 120 |
| 1503(b), (c) | NEW: Modify training program (one time burden for in-house operator modifications). | 6 | 24 | 144 |
| 1503(c) | Maintain copies of training plan and employee training documentation/record for 5 years. Note: We receive approx. 20,020 records per year. (5 minutes per record x 20,020 employee records/136 companies = 12.26 hours per company). | ¼ hour (plan)<br>12.26 hours (record) | 136 | 34<br>1,667 (rounded) |
| 1503(c) | Upon request, provide MMS copies of employee training documentation or provide copy of training plan. | 5 | 31 | 155 |
| 1507(b) | Employee oral interview conducted by MMS | ⅙ hr. | 600 | 100 |
| 1507(c), (d); 1508; 1509 | Written testing conducted by MMS or authorized representative. | Exempt under 5 CFR 1320.3(h)(7) | | 0 |
| 1510(b) | Revise training plan and submit to MMS | 6 | 4 | 24 |
| 250.1500–1510 | General departure or alternative compliance requests not specifically covered elsewhere in subpart O. | 2 | 3 | 6 |
| Total Burden | | | 800 Responses | 2,250 Hours |

The MMS specifically solicits comments on the following questions:

(a) Is the proposed collection of information necessary for MMS to properly perform its functions, and will it be useful?

(b) Are the estimates of the non-hour burden costs of the proposed collection reasonable?

(c) Do you have any suggestions that would enhance the quality, clarity, or usefulness of the information to be collected?

(d) Is there a way to minimize the information collection burden on those who are to respond, including the use of appropriate automated electronic, mechanical, or other forms of information technology?

In addition, the PRA requires agencies to estimate the total annual reporting and recordkeeping ''non-hour cost'' burden resulting from the collection of information. We have not identified any, and we solicit your comments on this item. For reporting and recordkeeping only, your response should split the cost estimate into two components:

(a) Total capital and start-up cost component and (b) annual operation, maintenance, and purchase of services component. Your estimates should consider the costs to generate, maintain, and disclose or provide the information. You should describe the methods you use to estimate major cost factors, including system and technology acquisition, expected useful life of capital equipment, discount rate(s), and the period over which you incur costs. Capital and start-up costs include, among other items, computers and software you purchase to prepare for collecting information; monitoring, sampling, drilling, and testing equipment; and record storage facilities. Generally, your estimates should not include equipment or services purchased:

(1) Before October 1, 1995;

(2) To comply with requirements not associated with the information collection;

(3) For reasons other than to provide information or keep records for the Government; or

(4) As part of customary and usual business or private practices.

*National Environmental Policy Act*

This proposed rule does not constitute a major Federal action significantly affecting the quality of the human environment. The MMS has analyzed this rule under the criteria of the National Environmental Policy Act and 516 Departmental Manual (DM) 2.3, and 516 DM 2, Appendix 1.10, and determined that it falls within the categorical exclusion for ''regulations * * * that are of an administrative, financial, legal, technical, or procedural nature as it is an administrative, procedural, and/or technical rule.'' The MMS completed a Categorical Exclusion Review for this action and concluded that the rulemaking does not involve extraordinary circumstances set forth in 516 DM 2, Appendix 2; therefore, preparation of an environmental assessment or environmental impact statement will not be required.

*Data Quality Act*

In developing this proposed rule, we did not conduct or use a study, experiment, or survey requiring peer review under the Data Quality Act (Pub. L. 106–554, app. C § 515, 114 Stat. 2763, 2763A–153–154).

*Effects on the Energy Supply (E.O. 13211)*

This proposed rule is not a significant energy action under the definition in E.O. 13211. A Statement of Energy Effects is not required.

*Clarity of This Regulation*

We are required by E.O. 12866, E.O. 12988, and by the Presidential Memorandum of June 1, 1998, to write all rules in plain language. This means that each rule we publish must:

(a) Be logically organized;

(b) Use the active voice to address readers directly;

(c) Use clear language rather than jargon;

(d) Be divided into short sections and sentences; and

(e) Use lists and tables wherever possible.

If you feel that we have not met these requirements, send us comments by one of the methods listed in the **ADDRESSES** section. To better help us revise the rule, your comments should be as specific as possible. For example, you should tell us the numbers of the sections or paragraphs that you find unclear, which sections or sentences are too long, the sections where you feel lists or tables would be useful, etc.

*Public Availability of Comments*

Before including your address, phone number, e-mail address, or other personal identifying information in your comment, you should be aware that your entire comment—including your personal identifying information—may be made publicly available at any time. While you can ask us in your comment to withhold your personal identifying information from public review, we cannot guarantee that we will be able to do so.

**List of Subjects in 30 CFR Part 250**

Administrative practice and procedure, Continental shelf, Oil and gas exploration, Public lands—mineral resources, Reporting and recordkeeping requirements.

Dated: August 14, 2008.

**Foster L. Wade,**

*Deputy Assistant Secretary—Land and Minerals Management.*

For the reasons stated in the preamble, Minerals Management Service (MMS) proposes to amend 30 CFR part 250 as follows:

## PART 250—OIL AND GAS AND SULPHUR OPERATIONS IN THE OUTER CONTINENTAL SHELF

1. The authority citation for part 250 continues to read as follows:

**Authority:** 31 U.S.C. 9701, 43 U.S.C. 1334.

2. Amend § 250.1201 by adding the definition of *Force majeure event* in alphabetical order as follows:

**§ 250.1201 Definitions.**

* * * * *

*Force majeure event*—an event beyond your control such as war, act of terrorism, crime, or act of nature which prevents you from operating the wells and meters on your OCS facility.

* * * * *

3. Amend § 250.1202 by revising paragraphs (d)(3), (k)(3), and (k)(4) as follows:

**§ 250.1202 Liquid hydrocarbon measurement.**

* * * * *

(d) * * *

(3) Prove each operating royalty meter to determine the meter factor monthly, but the time between meter factor determinations must not exceed 42 days. When a force majeure event precludes the required monthly meter proving, meters must be proved within 15 days after being returned to service;

* * * * *

(k) * * *

(3) Prove allocation meters monthly if they measure 50 or more barrels per day per meter. When a force majeure event precludes the required monthly meter proving, meters must be proved within 15 days after being returned to service; or

(4) Prove allocation meters quarterly if they measure less than 50 barrels per day per meter. When a force majeure event precludes the required quarterly meter proving, meters must be proved within 15 days after being returned to service;

* * * * *

4. Amend § 250.1203 by revising paragraph (c)(1) as follows:

**§ 250.1203 Gas measurement.**

* * * * *

(c) * * *

(1) Calibrate meters monthly, but do not exceed 42 days between calibrations. When a force majeure event precludes the required monthly calibration, meters must be calibrated within 15 days after being returned to service;

* * * * *

5. Amend § 250.1204 by revising paragraph (b)(1) as follows:

**§ 250.1204 Surface commingling.**

* * * * *

(b) * * *

(1) Conduct a well test at least once every 2 months unless the Regional Supervisor approves a different frequency. When a force majeure event precludes the required bimonthly (or other frequency approved by the Regional Supervisor) well test, wells must be tested within 15 days after being returned to service;

* * * * *

6. Amend § 250.1500 by adding the definitions *Contractor* and *Periodic* in alphabetical order and by revising the definition of *Production safety* to read as follows:

**§ 250.1500 Definitions.**

* * * * *

*Contractor* means anyone performing work for the lessee. However, these requirements do not apply to contractors providing domestic services to the lessee or other contractors. Domestic services include janitorial work, food and beverage service, laundry service, housekeeping, and similar activities.

* * * * *

*Periodic* means occurring or recurring at regular intervals. Each lessee must specify the intervals for periodic training and periodic assessment of training needs in their training programs.

*Production safety* includes safety in production operations, as well as the installation, repair, testing, maintenance, and operation of surface or subsurface safety devices. Production operations include, but are not limited to, separation, dehydration, compression, sweetening, and metering operations.

* * * * *

[FR Doc. E8–21488 Filed 9–16–08; 8:45 am]

BILLING CODE 4310–MR–P

## DEPARTMENT OF THE TREASURY

## 31 CFR Part 50

**RIN 1505–AB10**

## Terrorism Risk Insurance Program; Recoupment Provisions

**AGENCY:** Departmental Offices, Treasury.

**ACTION:** Notice of proposed rulemaking.

**SUMMARY:** The Department of the Treasury (Treasury) is issuing this proposed rule as part of its implementation of Title I of the Terrorism Risk Insurance Act of 2002 (''TRIA'' or ''the Act''), as amended by the Terrorism Risk Insurance Extension Act of 2005 (''Extension Act'') and the Terrorism Risk Insurance Program Reauthorization Act of 2007 (''Reauthorization Act''). The Act established a temporary Terrorism Risk Insurance Program (''TRIP'' or ''Program'') under which the Federal Government would share the risk of insured losses from certified acts of

terrorism with commercial property and casualty insurers. The Reauthorization Act has now extended the Program until December 31, 2014. This proposed rule is the latest in a series of regulations Treasury has issued to implement the Act. The proposed rule incorporates and implements statutory requirements in section 103(e) of the Act, as amended by the Reauthorization Act, for the recoupment of the federal share of compensation for insured losses. In particular, the proposed rule describes how Treasury will determine the amounts to be recouped and establishes procedures insurers are to use for collecting Federal Terrorism Policy Surcharges and remitting them to Treasury. The rule generally builds upon previous rules issued by Treasury.

**DATES:** Written comments must be received on or before October 17, 2008.

**ADDRESSES:** Submit comments electronically through the Federal eRulemaking Portal: *http://www.regulations.gov*, or by mail (if hard copy, preferably an original and two copies) to: Terrorism Risk Insurance Program, Public Comment Record, Suite 2100, Department of the Treasury, 1425 New York Avenue, NW., Washington, DC 20220. Because paper mail in the Washington, D.C., area may be subject to delay, it is recommended that comments be submitted electronically. All comments should be captioned with ''TRIA Recoupment Proposed Rule Comments.'' Please include your name, affiliation, address, e-mail address, and telephone number in your comment. Comments will be available for public inspection on the Federal eRulemaking Portal and by appointment at the TRIP Office. To make appointments, call (202) 622–6770 (not a toll-free number).

**FOR FURTHER INFORMATION CONTACT:** Howard Leikin, Deputy Director, Terrorism Risk Insurance Program, (202) 622–6770 (not a toll-free number).

**SUPPLEMENTARY INFORMATION:**

## I. Background

On November 26, 2002, the President signed into law the Terrorism Risk Insurance Act of 2002 (Pub. L. 107–297, 116 Stat. 2322). The Act was effective immediately. The Act's purposes are to address market disruptions, ensure the continued widespread availability and affordability of commercial property and casualty insurance for terrorism risk, and allow for a transition period for the private markets to stabilize and build capacity while preserving state insurance regulation and consumer protections.

Title I of the Act establishes a temporary federal program of shared public and private compensation for insured commercial property and casualty losses resulting from an act of terrorism. The Act authorizes Treasury to administer and implement the Terrorism Risk Insurance Program, including the issuance of regulations and procedures. The Program provides a federal backstop for insured losses from an act of terrorism. Section 103(e) of the Act gives Treasury authority to recoup federal payments made under the Program through policyholder surcharges.

The Program was originally set to expire on December 31, 2005. On December 22, 2005, the President signed into law the Terrorism Risk Insurance Extension Act of 2005 (Pub. L. 109–144, 119 Stat. 2660), which extended the Program through December 31, 2007. On December 26, 2007, the President signed into law the Terrorism Risk Insurance Program Reauthorization Act of 2007 (Pub. L. 110–160, 121 Stat. 1839), which extends the Program through December 31, 2014.

The Reauthorization Act, among other changes, revised the recoupment provisions of the Act. These changes are explained below in the context of discussion of other provisions.

## II. Previous Rulemaking

To assist insurers, policyholders, and other interested parties in complying with immediately applicable requirements of the Act, Treasury has issued interim guidances to be relied upon by insurers until superseded by regulations. Rules establishing general provisions implementing the Program, including key definitions, and requirements for policy disclosures and mandatory availability, can be found in Subparts A, B, and C of 31 CFR Part 50. Treasury's rules applying provisions of the Act to State residual market insurance entities and State workers' compensation funds are at Subpart D of 31 CFR Part 50. Rules setting forth procedures for filing claims for payment of the Federal share of compensation for insured losses are at Subpart F of 31 CFR Part 50. Subpart G of 31 CFR Part 50 contains rules on audit and recordkeeping requirements for insurers, while Subpart I of 31 CFR Part 50 contains Treasury's rules implementing the litigation management provisions of section 107 of the Act.

## III. The Proposed Rule

This proposed rule would add a Subpart H to part 50, which comprises Treasury's regulations implementing the Act. It also proposes to add definitions in § 50.5 of Subpart A and amend §§ 50.60 and 50.61 of Subpart G.

### *A. Overview*

Section 103(e)(6) of the Act, as amended, establishes an insurance marketplace aggregate retention amount for insured losses in any Program Year. This essentially guarantees that a certain aggregate amount of the insured losses will be borne by insurers and their policyholders in the insurance marketplace, irrespective of individual insurer deductibles and share of losses above those deductibles. Under the Reauthorization Act, the insurance marketplace aggregate retention amount for any additional Program Year after 2007 is the lesser of $27.5 billion and the aggregate amount, for all insurers, of insured losses during the Program Year. To carry this out, Sections 103(e)(7) and (e)(8) of the Act set forth the requirements for recoupment and policy surcharges for terrorism loss risk-spreading premiums. The Act establishes a mandatory recoupment amount representing all or a portion of the federal payments for insured losses. The Act requires the Secretary to collect, through terrorism loss risk-spreading premiums, an amount equal to 133 percent of the mandatory recoupment amount.[1] The Act also authorizes the Secretary, at his discretion, to recoup additional amounts to the extent that federal payments exceed the mandatory recoupment amount. The Act requires that amounts established by the Secretary as terrorism loss risk-spreading premiums are to be imposed as a policyholder premium surcharge on property and casualty insurance policies in force after the date of establishment of the surcharge. The Secretary is required to provide for insurers to collect terrorism loss risk-spreading premiums and remit the amounts collected to Treasury.

The Reauthorization Act added section 103(e)(7)(E), which establishes deadlines by which the collection of terrorism loss risk-spreading premiums, which are required for mandatory recoupment, must be accomplished. The amounts and deadlines vary depending on when an act of terrorism occurs:

- For any act of terrorism that occurs on or before December 31, 2010, the Secretary shall collect all required premiums by September 30, 2012;

[1] Prior to the Reauthorization Act, under Section 103(e)(7)(C) of TRIA, the Secretary was required to collect premiums in an amount equal to any mandatory recoupment amount. The Reauthorization Act changed the amount to 133 percent of the mandatory recoupment amount.

• For any act of terrorism that occurs between January 1 and December 31, 2011, the Secretary shall collect 35 percent of any required premiums by September 30, 2012, and the remainder by September 30, 2017; and

• For any act of terrorism that occurs on or after January 1, 2012, the Secretary shall collect all required premiums by September 30, 2017.

The Reauthorization Act also requires the Secretary to issue regulations describing the procedures to be used for collecting the required premiums in these time periods.[2]

The Reauthorization Act also added a provision (Section 103(e)(7)(F)) requiring the Secretary to publish, within 90 days of an act of terrorism, an estimate of aggregate insured losses which shall be used as the basis for determining whether mandatory recoupment will be required. This 90-day period would begin to run from the date of certification. Such estimate is to be updated as appropriate, and at least annually.

The proposed rule describes how Treasury will determine the amounts to be recouped, the factors and considerations that would be the basis for establishing the specific surcharge amount, the procedures for Treasury's notification to insurers regarding the surcharges to be imposed, and the requirements for insurers to collect, report, and remit surcharges to the Treasury. Treasury seeks comment on all aspects of the proposed rule.

It is Treasury's intention, to the extent possible, to keep insurer reporting requirements for recoupment purposes consistent with reporting schedules and definitions that currently apply under state insurance regulations. Treasury notes that certain elements of the TRIA recoupment requirements are similar to the state processes involved in assessing insurers for state guaranty funds or collecting state premium taxes. In developing this proposed rule, Treasury has looked to these state regulatory processes as models for designing the recoupment mechanism and has consulted with the National Association of Insurance Commissioners (NAIC).

*B. Description of the Proposed Rule*

The major provisions of the proposed rule are as follows:

1. Determination of Recoupment Amount

The proposed rule describes how and when Treasury will determine recoupment amounts. Definitions of insurance marketplace aggregate retention amount, aggregate Federal share of compensation, mandatory and discretionary recoupment amounts, and uncompensated insured losses, which reflect requirements in the Act, would be added to § 50.5.

The mandatory recoupment amount is the difference between the insurance marketplace aggregate retention amount for a Program Year and the aggregate amount, for all insurers, of uncompensated insured losses during such Program Year (unless the aggregate amount of uncompensated insured losses is greater than the insurance marketplace aggregate retention, in which case the mandatory recoupment amount is zero). For any Program Year beginning with 2008 through 2014, the insurance marketplace aggregate retention amount is the lesser of $27.5 billion and the aggregate amount, for all insurers, of insured losses from Program Trigger Events during the Program Year. For example, if the aggregate amount of insured losses from Program Trigger Events during the Program Year were $10 billion, the insurance marketplace aggregate retention amount would be $10 billion. The mandatory recoupment amount would be the difference between $10 billion and the aggregate amount of uncompensated insured losses. ''Uncompensated insured losses'' is generally the aggregate amount of insured losses from Program Trigger Events not compensated by the Federal Government because the losses are within insurer deductibles or the 15 percent insurer share, or otherwise not paid. The amount of uncompensated insured losses depends on the distribution of those losses among insurers. So continuing with the above example, if uncompensated insured losses amounted to $8 billion and Federal payments amounted to $2 billion, the mandatory recoupment amount would be $2 billion (the difference between $10 billion and the aggregate amount of uncompensated insured losses of $8 billion). The amount the Secretary would be required to collect would be 133 percent of $2 billion, or $2.67 billion.

Section 103(e)(7)(D) of the Act also provides the Secretary with discretionary authority to recoup additional amounts to the extent that the amount of Federal financial assistance exceeds the mandatory recoupment amount. The Secretary may recoup such additional amounts the Secretary believes can be recouped based on: the ultimate costs to taxpayers of no additional recoupment; the economic conditions in the commercial marketplace; the affordability of commercial insurance for small- and medium-sized businesses; and such other factors that the Secretary considers appropriate. The proposed rule refers to these considerations in proposed § 50.70(b). Because of the great uncertainty as to economic conditions after the occurrence of an act of terrorism, Treasury believes it is prudent to retain maximum flexibility to address these considerations at a future time. In exercising this discretionary authority, however, Treasury generally intends to consider these various factors on a broad-scale basis.

As described above, the Reauthorization Act included certain deadlines for the collection of mandatory recoupment amounts. The timing requirements for collecting ''required premiums'' means that surcharges must be sufficient to recoup Federal funds outlaid as of these target dates for the Federal share of compensation for insured losses.

The timing requirements for mandatory recoupment present two potential operational challenges, the severity of which depends on when an act of terrorism occurs within the designated time periods. The first is that in order to meet the deadlines, recoupment may have to be initiated based on estimates of insured losses and Federal outlays, but prior to the submission to Treasury of significant amounts of actual insurer claims for the Federal share of compensation for losses. The other challenge is that, again, in order to meet the deadlines, it may be difficult to provide the most desirable lead time notification to insurers for implementing surcharges. Both of these issues are further addressed below.

Proposed § 50.71(a) provides that if payments for the Federal share of compensation have been made for a Program Year, and Treasury determines that insured loss information is sufficiently developed and credible to serve as a basis for calculating

[2] The collection timing requirements and the requirement to collect 133 percent of the mandatory recoupment amount were included in an amendment to H.R. 2761, the terrorism Risk Insurance Program Reauthorization Act of 2007. 153 Cong. Rec. S14592 (daily ed. Nov. 16, 2007). In a letter dated November 15, 2007, to Chairman Dodd to the Senate Committee on Banking, Housing, and Urban Affairs, the Congressional Budget Office (CBO) estimated that the amended would cause Treasury to collect more revenues on an expedited basis an amounts sufficient to offset the estimated cost for the bill. *http://www.cbo.gov/ftpdocs/88xx/doc8825/TRIAltrSenBankingComm.pdf.* In its earlier cost estimate for the bill, CBO had noted that gross collections of surcharges would be partially offset by a loss of receipts from income and payroll taxes and, consistent with standard procedures for estimating the revenue impact of indirect business taxes, had reduced the gross revenue impact of the insurance surcharges by 25 percent to reflect offsetting effects on income and payroll tax receipts. (S. Rep. No. 110–215, at 14 (2007).)

recoupment amounts, then Treasury will make an initial determination of any mandatory or discretionary recoupment amounts for that Program Year. Treasury believes that it is desirable, to the extent possible, to base recoupment amounts on retrospective reviews of insured losses and the Federal share of compensation for those losses. Determining accurate recoupment amounts is dependent on the availability of mature and credible insured loss information. Enough time must pass to allow losses to be reported by insureds to their insurers, and for insurers to settle, pay and report their insured losses to Treasury and others such as states and statistical agents. It is clear that insured loss amounts will be changing over time. As new information becomes available, estimates of insured losses for a Program Year will gradually approach an accurate final number. Ideally, Treasury will use loss information obtained from the submissions by insurers for the Federal share of compensation, as well as other industry sources, to determine the appropriate time to make an initial determination of recoupment amounts. Thereafter, as described under proposed § 50.71(c), Treasury will at least annually examine the latest available information on insured losses to recalculate any recoupment amounts until such time as Treasury determines that the calculation is considered final.

However, Treasury must also be prepared to initiate mandatory recoupment based on estimates, prospectively, of insured losses, the Federal share of compensation for insured losses, and the resulting Federal outlays. Proposed § 50.71(b) provides that within 90 days after an act of terrorism, the Secretary shall publish an estimate of aggregate insured losses which shall be used as the basis for initially determining whether mandatory recoupment will be required. Further, if at any time Treasury projects that payments for the Federal share of compensation will be made for a Program Year, and that in order to meet the collection timing requirements of section 103(e)(7)(E) of the Act it is necessary to use an estimate of such payments as a basis for calculating recoupment amounts, Treasury will make an initial determination of any mandatory recoupment amounts for that Program Year. As noted above, Treasury will at least annually examine the latest available information on insured losses to recalculate any recoupment amounts.

Treasury is proposing, in § 50.71(d), that it may issue a data call to insurers for the submission of information on insured losses from Program Trigger Events and for insurer deductible information. There are at least two circumstances where such a collection of data may be necessary. The first arises out of the requirement to publish within 90 days of an act of terrorism an estimate of insured losses and potentially to have to initiate mandatory recoupment based on the estimate in order to meet the Reauthorization Act's timing requirements for collections. Treasury intends, to the extent possible, to rely on existing industry statistical reporting mechanisms in making initial estimates. However, in order to initiate recoupment, it may be necessary to have more timely detail regarding insurer deductibles and reserves for insured losses from lines of business not normally included in existing industry reporting.

A second potential need for a data call arises even in the circumstance where Treasury is able to retrospectively review insured loss payments in order to determine a recoupment amount. Treasury will have accurate data on how much has been paid as the Federal share of compensation and will also have accurate data on the insured losses of the insurers that have submitted claims for the Federal share. However, Treasury will not have its own access to data on insured losses of insurers that have not submitted claims for the Federal share (in most cases because the insurers have not met their insurer deductibles). If it is apparent from industry sources that the aggregate amount of insured losses from Program Trigger Events for a Program Year is clearly below the specific dollar amount of the insurance marketplace aggregate retention amount, *i.e.*, $27.5 billion, then Treasury will have the information that is needed to determine the mandatory recoupment amount. If the aggregate amount of such insured losses appears to be close to or greater than the specific insurance marketplace aggregate retention dollar amount, then Treasury may require more specific data on insured losses of insurers who have not submitted a claim for the Federal share.

It is Treasury's intention to proceed with the development of forms for the electronic submission of insurer responses to a data call, with appropriate opportunity being provided for public review and comment. The circumstances of a particular Program Trigger Event will likely have a significant bearing on which insurers should receive the data call and how the data should be coordinated, perhaps with the NAIC or a particular state. Additional data call guidance will be provided as necessary based on the circumstances of the particular Program Trigger Event. Treasury expects that for insurers that have already submitted data in conjunction with a claim for the Federal share, the requirement to respond to a special data call may not apply.

2. Establishment of Federal Terrorism Policy Surcharge

Once Treasury has determined an amount to be recouped, an assessment period and Surcharge amount will be established. The proposed rule includes new definitions for ''Federal Terrorism Policy Surcharge'' (also referred to herein as the Surcharge), ''assessment period'' and ''Surcharge effective date'', which would be added to § 50.5 of the regulations. Proposed § 50.72(b) provides that the Surcharge is the obligation of the policyholder and payable to the insurer with the premium for a property and casualty insurance policy in effect during the assessment period.

Treasury is proposing to define an ''assessment period'' as a period during which policyholders must pay, and insurers must collect, the Federal Terrorism Policy Surcharge for remittance to Treasury. Treasury's intention is that, to the extent possible, assessment periods will be in full-year increments in order to equitably impose the Surcharge on policyholders who have policy term effective dates throughout the year. Due to the collection deadlines, however, this may not always be feasible.

The proposed definition for ''Federal Terrorism Policy Surcharge'' is the amount established by Treasury as a policy surcharge on policies of ''property and casualty insurance'' as that term is defined in the existing § 50.5(n) (proposed to become § 50.5(u)). The Surcharge would be expressed as a percentage of the amount charged as written premium for commercial property and casualty coverage in such policies.

The factors and considerations Treasury would consider in establishing the amount of the Federal Terrorism Policy Surcharge are set out in proposed § 50.72(a). They include requirements of the Act as well as other factors. In particular, section 103(e)(7)(C) of TRIA as amended by the Reauthorization Act, requires that once a mandatory recoupment amount is determined, collections are to equal 133 percent of that amount.

In order to estimate the premium base for the Surcharge during the anticipated assessment period, Treasury will use generally available industry reported information for written premium from

the prior calendar year for the lines of business defined as commercial lines of property and casualty insurance under Treasury regulations. Treasury is aware that there might be trends in written premium (e.g, hard or soft markets) that could be significant to the amounts anticipated during the assessment period. To the extent such trends are known and quantifiable, Treasury will consider the effect on the premium base and adjust the surcharge percentage accordingly.

Establishment of the Surcharge will be heavily influenced by the collection timing requirements of section 103(e)(7)(E) of the Act for mandatory recoupment. In the case of discretionary recoupment, the collection timing requirements do not apply, but the Act specifies that the Surcharge can be no greater, on an annual basis, than three percent of the premium charged for property and casualty insurance coverage under the policy.

Section 103(e)(8)(D) of the Act also requires Treasury, in determining the method and manner of imposing the Surcharge, to take into consideration the economic impact on commercial centers of urban areas, risk factors related to rural areas and smaller commercial centers, and various exposures to terrorism risk for different lines of insurance. While Treasury will consider these factors at the time it becomes necessary to establish the amount of a Surcharge, for the following reasons it is likely that the same Federal Terrorism Policy Surcharge would apply to all commercial property and casualty lines of insurance, as defined by the Act, and all rating classifications.

It is Treasury's understanding, after consulting with industry experts, that recognition of differences in risk factors related to rural versus urban areas and different lines of insurance is substantially accomplished through the rating plans for commercial lines insurance policies. These rating plans reflect variations in the underlying premiums to which the Surcharge would be applied based on the same sorts of adjustment factors described in the Act—rural versus urban risks, line of business risk, etc. For example, the same Surcharge percentage will produce a larger dollar amount when applied to the greater premiums in larger urban centers than it will produce when applied to premiums for insurance policies covering risks in other areas. In other words, variations in underlying premium amounts for commercial lines insurance policies already appear to substantially operate in a way that addresses the adjustment factors described in the Act.

Treasury is also concerned about the time and resources needed to perform the complex analyses and to construct and implement a detailed risk classification scheme reflecting these factors. Too detailed a schedule of Surcharges could also create an undue administrative burden in the insurance marketplace where, generally, surcharge mechanisms are implemented on a comparatively broad basis. Moreover, these economic considerations would need to be applied along with the requirements to collect 133 percent of the mandatory recoupment amount by certain deadlines. As noted above, the Surcharge may very well be implemented on the basis of estimates of future Federal outlays for the Federal share of compensation for insured losses.

Treasury is therefore inclined to implement the same Surcharge for all commercial property and casualty lines of insurance and all rating classifications. However, based on a review of economic conditions at the time a Surcharge amount is established, Treasury might, if necessary, and within the collection timing constraints, mitigate economic impacts by imposing a lesser Surcharge over a longer period of time. Treasury welcomes comments on this approach.

3. Notification of Recoupment

Section 50.73 of the proposed rule states that Treasury will provide reasonable advance notice of any initial Surcharge effective date. This effective date shall be January 1, unless such date would not provide for sufficient notice of implementation while meeting the collection timing requirements of section 103(e)(7)(E) of the Act. As explained below, the purpose of a January 1 effective date is to coordinate with the NAIC Annual Statement reporting period. Treasury's preference is to provide at least 180 days advance notice, allowing insurers to schedule necessary system changes and to take into account policy renewal cycles. Treasury will provide notification annually as to continuation of the Surcharge. Treasury also proposes to provide reasonable advance notice of any modification or cessation of the Surcharge. In such cases, Treasury anticipates providing at least 90 days notice. Notifications will be accomplished through publications in the **Federal Register** or in another manner Treasury deems appropriate, based upon the circumstances of the act of terrorism under consideration.

With respect to a January 1 effective date, Treasury believes that there is a clear advantage to coordinating an assessment period and the written premium and remitted Surcharge amounts with the calendar year basis for the NAIC Annual Statements. However, the timing of an act of terrorism, the emerging estimates of insured losses and resulting Federal outlays, and the requirement to collect the Surcharges by certain deadlines could impinge on Treasury's ability to provide a full 180 days' notice to insurers of a Surcharge implementation as of January 1. There are two possible alternatives for managing this circumstance for which Treasury is interested in public comment.

The first alternative is a possible bifurcated notification to insurers. Treasury would notify insurers 180 days in advance of January 1, that an assessment period will commence, but the actual Surcharge amount would not yet be provided. This would allow insurers time to develop systems changes to implement a Surcharge. The actual Surcharge amount would be provided at a later date, perhaps at least 60 days in advance of January 1.

The second alternative is to relax the standard of a January 1 implementation date. The assessment period could start as of the first day of a later month, but continue through that calendar year. The result of this would be a more complicated reconciliation of written premium and Surcharge amounts with Annual Statement data, but would yet be substantially consistent with the Annual Statement reporting period.

4. Collecting the Surcharge

Section 50.74 of the proposed rule specifies that insurers shall collect a Federal Terrorism Policy Surcharge as established by Treasury on new, renewal, mid-term, or audit additional premiums for all property and casualty insurance policies with policy term effective dates during the assessment period. Policies placed in force prior to the assessment period are not subject to the Surcharge until renewal, regardless of mid-term endorsements. Property and casualty insurance has been previously defined in the existing § 50.5(n). That definition was the result of extensive consultation, which produced a regulatory definition of commercial property and casualty insurance crafted in terms of specific lines of business employed in the NAIC's Exhibit of Premium and Losses, modified by the exceptions for certain types of insurance excluded by the Act.

Insurers will be obligated to implement the Federal Terrorism Policy Surcharge on a policyholder transaction level. Treasury prefers a Surcharge collection mechanism that is relatively

simple to administer and audit and that avoids complex calculations and systems adjustments. However, there is a complicating factor in the definition of commercial property and casualty insurance. Certain exclusions in the definition increase the likelihood of individual policies providing types of insurance that are considered to fall both within and outside the Act's definition of property and casualty insurance. The authorities under the Act (at subsections 103(e)(8)(A) and (C)[3]) limit the application of the Surcharge to the policy premium amount charged for property and casualty insurance coverage under the policy.

In this rule, as a basic starting point, Treasury proposes that the Surcharge apply to the full premium for any policy falling within the definition of property and casualty insurance in proposed § 50.5(u), *i.e.*, the premium for the policy is reported on the insurer's NAIC Annual Statement, or equivalent reporting document, in a specified commercial line of business as defined by Treasury in § 50.5(n)(1). However, a portion of a policy's premium would not be subject to the Surcharge if, despite the line of business premium reporting to the NAIC, that portion of the premium is for coverage under the policy that is a type of insurance not considered to be commercial property and casualty insurance as specified in Treasury regulation § 50.5(n)(2). Treasury anticipates that these cases are most likely to occur within Line 17—Other Liability, where professional liability, excess liability and umbrella liability policy premiums are reported. There may also be cases occurring in other lines involving coverage that is considered to be personal, not commercial (residential dwellings insured under monoline policies where premium is reported on Line 3—Fire) and therefore should be excluded, consistent with Treasury's rules in allocating such premiums for purposes of calculating direct earned premium. In the case of a policy providing multiple insurance coverages, where an insurer cannot identify the premium amount charged specifically for property and casualty coverage under the policy, the proposed rule provides for two circumstances. If the insurer estimates that the portion of the premium amount charged for coverage other than property and casualty insurance is *de minimis* to the total premium for the policy, the insurer may impose and collect from the policyholder a Surcharge amount based on the total premium for the policy. If the insurer estimates that the portion of the premium amount charged for coverage other than property and casualty insurance is not *de minimis*, the insurer shall impose and collect from the policyholder a Surcharge amount based on a reasonable estimate of the premium amount for the property and casualty insurance coverage under the policy. Treasury intends to develop reporting forms that will provide additional guidance for determining the premium subject to the Surcharge.

As part of this rule, Treasury is proposing adding a definition to § 50.5 for direct written premium, which is the premium information for commercial property and casualty insurance, as defined in the regulations, that is included by an insurer in column 1 of the Exhibit of Premiums and Losses of the NAIC Annual Statement or in an equivalent reporting requirement. Consistent with the discussion above, Treasury is proposing that in its reporting to Treasury, an insurer would subtract the premium that is not subject to the Surcharge. Otherwise, the full premium for the policy is included for Surcharge computation. Treasury is also proposing minor adjustments to the definition of direct earned premium to eliminate some inconsistencies between that definition and the new definition of direct written premium. The definition of direct written premium has been crafted to be consistent with premium billing and collection practices on a transactional level, as well as consistent with state regulatory requirements for reporting written premiums. The Surcharge itself is not considered premium.

Treasury is also proposing in § 50.74 that insurers may satisfy the obligation to collect the Federal Terrorism Policy Surcharge by simply remitting the calculated Surcharge amount to Treasury in circumstances where the expense of collecting the Surcharge from all policyholders during an assessment period exceeds the amount of the Surcharge anticipated to be collected.

The Federal Terrorism Policy Surcharge is a repayment of Federal financial assistance in an amount required by law. It is not a premium paid by a policyholder to an insurer. The proposed rule provides that no fees or commissions may be charged on the Surcharge. In addition, the proposed rule provides that if an insurer returns any unearned premium to a policyholder, it shall also return any Federal Terrorism Policy Surcharge collected that is attributable to the unearned premium.

As noted above, while the collection of the Surcharge is an obligation of the insurer, the payment of the Surcharge is an obligation of the policyholder. The proposed rule provides that the insurer shall have such rights and remedies to enforce the collection of the Surcharge that are equivalent to those that exist under applicable state or other law for nonpayment of premium. Insurers should follow the appropriate state law in such circumstances.

5. Remitting the Surcharge

Treasury is proposing in § 50.76 that, notwithstanding the definition of an insurer in existing § 50.5(f) (proposed to become § 50.5(l)), the collection, reporting and remittance of Federal Terrorism Policy Surcharges to Treasury shall be the responsibility of each individual insurer entity as otherwise defined in § 50.5(f) without including affiliates. This is because affiliations of insurers that are relevant in determining insurer deductibles are not pertinent to the collection and remittance of the Surcharges.

Consistent with the Act, Treasury's proposed approach to the collection and remittance of the Federal Terrorism Policy Surcharge is to place an obligation on the policyholder to pay the Surcharge and require the insurer to collect the Surcharge from each policyholder. Treasury's proposed rule provides insurers the means to address non-payment of the Surcharge and provides for the reporting and remittance of the Surcharge to Treasury according to calculated amounts that are based on statutory financial reporting already required by the states. The description of premium subject to the Surcharge in proposed § 50.74(c) and the definition of ''direct written premium'' in proposed § 50.5(g) and other provisions of the proposed rule on the treatment of the Surcharge at both the policy transaction and financial statement reporting levels have been crafted so that the Surcharge amounts calculated for remittance to Treasury will be equivalent to the actual collections. By relying on premium amounts that are reported to the States, and that are already subject to other audit requirements, Treasury expects that its own audit responsibilities can be accomplished with less focus on individual insurer compliance with the Surcharge collection than would otherwise be necessary. This will result in a more efficient mechanism for recoupment for Treasury, insurers, and policyholders.

In developing reporting and remittance frequency requirements, Treasury has considered the amount of

[3] Under the Reauthorization Act, Section 103(e)(8)(C) now applies only to discretionary recoupment.

time insurers may be holding the funds collected prior to remittance to Treasury, and the current Value of Federal Funds published by the Treasury's Financial Management Service. Treasury also recognizes that a monthly accounting period is standard within the insurance industry. The proposed rule would allow insurers to retain the interest (and therefore not have to separately account and remit such amounts to Treasury) on funds collected on a ''written'' basis and remitted monthly to Treasury. Treasury believes that this is a reasonably efficient approach to administering the collection and remittance requirements of the Act. Should the Value of Federal Funds at the time of any actual imposition of the Federal Terrorism Policy Surcharge be significantly greater than current levels, Treasury will revisit this issue.

Section 50.75 of the proposed rule calls for insurers to report and remit Federal Terrorism Policy Surcharges on a monthly basis, starting with the first month within the assessment period, through November of the calendar year and on an annual basis as of the last month. As discussed earlier, ideally the first month within the assessment period would be January. The proposed requirements are intended to ease the administrative burden by building upon reporting requirements already imposed by the States. The definition of ''direct written premium'' on which an insurer must report and the specific due dates for reporting in proposed § 50.75(a) have been coordinated with NAIC Annual Statement requirements. The main reconciliation of information reported to Treasury and to NAIC would be accomplished with the year-end NAIC Annual Statements.

The collection timing requirements of section 103(e)(7)(E) of the Act generally require recoupment of certain amounts of Federal outlays through September 30, coinciding with the end of the Federal fiscal year. Treasury will estimate recoupment amounts and Surcharges so that these deadlines are met, while still keeping to an end of calendar year date for defining an assessment period. This end date will allow the reporting and reconciliation to be coordinated with Annual Statements.

To accommodate possible changes in the Federal Terrorism Policy Surcharge amount from one year to another, Treasury is proposing that direct written premium be broken down by policy year. This is similar to requirements imposed at the state level with regard to other assessments. Further, since remittance is on a ''written'' basis, there will be a continued reporting requirement for one year following the end of the assessment period. During this period, Treasury anticipates that insurers will primarily be seeking reimbursement from Treasury for Federal Terrorism Policy Surcharges returned to policyholders in conjunction with a return of unearned premiums.

Treasury will be developing forms for the reporting and remittance of the Federal Terrorism Policy Surcharge and plans on implementing an electronic reporting and payment facility.

6. Audit Authority and Recordkeeping

As stated previously, it is Treasury's intention that its reporting requirements, coordinated and reconciled with other state level reporting, will result in less of an audit burden than might otherwise be necessary. The proposed rule includes a revision of § 50.60 and an addition to § 50.61. The revision adds language to the effect that the Secretary of the Treasury, or an authorized representative, shall have, upon reasonable notice, access to all books, documents, papers and records of an insurer that are pertinent to the Federal Terrorism Policy Surcharge. The addition generally provides that records relating to premiums, Surcharges, collections and remittances to Treasury shall be retained by an insurer and kept available for review for not less than three (3) years following the conclusion of the assessment period or settlement of accounts with Treasury, whichever is later.

7. Enforcement

Insurers will be responsible for collecting appropriate Surcharge amounts from their policyholders. Because proposed § 50.74(d) provides that insurers have rights and remedies to enforce collection that are equivalent to those that exist under state law for nonpayment of premium, Treasury believes insurers will have the requisite tools to collect the Surcharge. Treasury may rely on its authority to impose civil monetary penalties on an insurer pursuant to section 104(e)(1)(A) of the Act for the failure to charge, collect or timely remit proper Surcharge amounts to enforce the provisions of this proposed rule.

8. Other Technical Changes

As noted under ''Collecting the Surcharge,'' Treasury is proposing some minor changes to the existing definition of ''direct earned premium.'' Although the complete definition is set out for information, no substantive changes were made to existing § 50.5(d)(1)(iv), (d)(2), (d)(3), and (d)(4). Similarly, although the existing provision on recordkeeping is set out in proposed § 50.61(a), no substantive changes were made to that provision.

## IV. Procedural Requirements

*Executive Order 12866, ''Regulatory Planning and Review''.* This rule is a significant regulatory action for purposes of Executive Order 12866, ''Regulatory Planning and Review,'' and has been reviewed by the Office of Management and Budget.

*Regulatory Flexibility Act.* Pursuant to the Regulatory Flexibility Act, 5 U.S.C. 601 et seq., it is hereby certified that this proposed rule will not have a significant economic impact on a substantial number of small entities. Treasury is required to recoup all or a portion of the Federal share of compensation paid to insurers for insured losses in accordance with the Act. The Act itself requires that a policyholder surcharge be imposed on all policies of property and casualty insurance, as defined in the Act. The Act requires Treasury to provide for insurers to collect the surcharges and remit them to Treasury. The Act also defines property and casualty insurance to mean commercial lines insurance, with certain specific exclusions, without any reference to the size or scope of the insurer or the policyholder. Accordingly, any economic impact associated with the proposed rule flows from the Act and not the proposed rule. A regulatory flexibility analysis is thus not required.

*Paperwork Reduction Act.* The collection of information contained in this proposed rule has been submitted to the Office of Management and Budget (OMB) for review under the requirements of the Paperwork Reduction Act, 44 U.S.C. 3507(d).

Organizations and individuals desiring to submit comments concerning the collection of information in the proposed rule should direct them to: Office of Management and Budget, Attn: Desk Officer for the Department of the Treasury, Office of Information and Regulatory Affairs, Washington, DC 20503. A copy of the comments should also be sent to Treasury at the addresses previously specified. Comments on the collection of information should be received by November 17, 2008.

Treasury specifically invites comments on: (a) Whether the proposed collection of information is necessary for the proper performance of the mission of Treasury, and whether the information will have practical utility; (b) the accuracy of the estimate of the burden of the collections of information (see below); (c) ways to enhance the

quality, utility, and clarity of the information collection; (d) ways to minimize the burden of the information collection, including through the use of automated collection techniques or other forms of information technology; and (e) estimates of capital or start-up costs and costs of operation, maintenance, and purchase of services to maintain the information.

At this time comments are being sought with respect to the collection of information in the proposed rule for: (a) The data call described at § 50.71 (d); (b) the burden of one-time systems changes needed for insurer collection and remittance of surcharges as required by § 50.74 and § 50.75; (c) the monthly collection, remittance and reconciliation of surcharges pursuant to § 50.74 and § 50.75; and (d) the recordkeeping requirement in § 50.61(b) for information to be used by Treasury (or its designees) to audit for the proper collection and remittance of recoupment amounts to Treasury. The forms to be prescribed by Treasury for the data call to collect information to ascertain the aggregate amount of insured losses will require information readily derived from existing normal industry internal and external reporting. This information would be needed by Treasury for the purpose of determining initial or recalculated recoupment amounts. Hence, Treasury may issue data calls to insurers for insurer deductible and insured loss information by Program Year. The number of respondents to such a data call is not expected to exceed 200 insurers. The data to be obtained in the immediate aftermath of certification of an act of terrorism would include the insurers' total expected losses and estimated insurer deductibles. These data would be used to formulate initial estimates of aggregate insured losses for determining whether mandatory recoupment might be required. A subsequent call(s) to refine the information received would include catastrophe code, line of business, losses paid, allocated loss adjustment expenses paid, case reserves, incurred but not reported reserves as well as the total expected loss and insurer deductible data. All of these are routinely generated and reported data in the insurance industry. Treasury estimates that an insurer will require 5 hours, on average, to assemble data and respond to the Treasury request. The estimated total burden would therefore be 1,000 hours (200 insurers × 5 hours). At a blended, fully loaded hourly rate of $85.00, the cost would be $85,000.

If recoupment of the Federal share of compensation is implemented by Treasury, all insurers subject to the Act will be required to create and maintain records concerning their direct written premium, Surcharges, Surcharge amounts collected and Surcharge amounts remitted to Treasury. Calculating and imposing surcharges is a standard insurance processing system function that would be specifically implemented for the Federal Terrorism Policy Surcharge. The burden associated with the collection of information in the proposed rule is comprised of three components: (1) Surcharge implementation; (2) monthly submission and reconciliation; and (3) on-going recordkeeping.

Treasury estimates that an insurer will require, one time at the onset of the imposition of Surcharges, 40 hours, on average, to make systems changes necessary to implement the collection of Surcharges from policyholders. Treasury also estimates that the proposed rule will impose an annual recordkeeping burden, with respect to each insurer subject to the Act, of 4 hours. The estimated total burden for implementation is 80,000 hours (2,000 insurers × 40 hours) and the estimated total annual recordkeeping burden is 8,000 hours (4 hours × 2,000 insurers). If imposed, the first year cost to respondents for implementation of systems and procedures for the recoupment requirements is estimated to be $7,400,000 (approximately 80,000 hours at a blended, fully loaded hourly rate of $92.50). Once implemented and incorporated into respondents' systems, there is expected to be virtually no additional operation and maintenance cost.

To limit the burden on insurers, the reporting requirement to Treasury is being designed for electronic fulfillment. The data required are those normally developed and reported in the conduct of policy writing and accounting. Development and transmission of the individual monthly submission (including the final month's annual statement) is expected to be 5 hours, or 60 hours annually for each of the estimated 2,000 insurers subject to the requirement. At a blended hourly rate of $70, the estimated annual burden to insurers is 120,000 hours and $8,400,000.

The recordkeeping requirement is mandatory for any insurer that writes property and casualty insurance as defined by the Act and Treasury's regulations. The number of insurers subject to recordkeeping is estimated to be 2,000. Treasury believes that the information that insurers would be required to generate and retain under § 50.61(b) involves systems and records that insurers routinely operate and maintain in the course of issuing and administering policies, performing basic accounting, and regularly reporting to state regulators. The total annual recordkeeping costs for respondents is estimated to be $240,000 (approximately 8,000 hours at a rate of $30.00 per hour). These costs could continue in subsequent years.

The total first-year cost of these activities is estimated at $16,040,000 with later years estimated at $8,400,000 for collection and submission activities and $240,000 for recordkeeping.

**List of Subjects in 31 CFR Part 50**

Terrorism risk insurance.

**Authority and Issuance**

For the reasons stated above, 31 CFR part 50 is proposed to be amended as follows:

## PART 50—TERRORISM RISK INSURANCE PROGRAM

1. The authority citation for part 50 is revised to read as follows:

**Authority:** 5 U.S.C. 301; 31 U.S.C. 321; Title I, Pub. L. 107–297, 116 Stat. 2322, as amended by Pub. L. 109–144, 119 Stat. 2660 and Pub. L. 110–160, 121 Stat. 1839 (15 U.S.C. 6701 note).

2. Section 50.5 is amended as follows:

a. Paragraphs (d), (e), (f), (g), (h), (i), (j), (k), (l), (m), (n), (o), (p), (q), and (r) are redesignated as paragraphs (f), (k), (l), (m), (o), (p), (q), (r), (s), (t), (u), (v), (w), (y) and (aa), respectively.

b. New paragraphs (d), (e), (g), (h), (i), (j), (n), (x), and (z) are added.

c. Newly designated paragraph (f) is revised.

The revisions read as follows:

**§ 50.5 Definitions.**

* * * * *

(d) *Aggregate Federal share of compensation*—means the aggregate amount paid by Treasury for the Federal share of compensation for insured losses in a Program Year.

(e) *Assessment period*—means a period, established by Treasury, during which policyholders of property and casualty insurance policies must pay, and insurers must collect, the Federal Terrorism Policy Surcharge for remittance to Treasury.

(f) *Direct earned premium* means direct earned premium for all commercial property and casualty insurance issued by any insurer for insurance against all losses, including losses from an act of terrorism, occurring at the locations described in section 102(5)(A) and (B) of the Act.

(1) *State licensed or admitted insurers.* For a State licensed or

admitted insurer that reports to the NAIC, direct earned premium is the premium information for commercial property and casualty insurance reported by the insurer on column 2 of the NAIC Exhibit of Premiums and Losses of the NAIC Annual Statement (commonly known as Statutory Page 14). (See definition of property and casualty insurance.)

(i) Premium information as reported to the NAIC should be included in the calculation of direct earned premiums for purposes of the Program only to the extent it reflects premiums for commercial property and casualty insurance issued by the insurer against losses occurring at the locations described in section 102(5)(A) and (B) of the Act.

(ii) Premiums for personal property and casualty insurance (insurance primarily designed to cover personal, family or household risk exposures, with the exception of insurance written to insure 1 to 4 family rental dwellings owned for the business purpose of generating income for the property owner), or premiums for any other insurance coverage that does not meet the definition of commercial property and casualty insurance, should be excluded in the calculation of direct earned premiums for purposes of the Program.

(iii) Personal property and casualty insurance coverage that includes incidental coverage for commercial purposes is primarily personal coverage, and therefore premiums may be fully excluded by an insurer from the calculation of direct earned premium. For purposes of the Program, commercial coverage is incidental if less than 25 percent of the total direct earned premium is attributable to commercial coverage. Commercial property and casualty insurance against losses occurring at locations other than the locations described in section 102(5)(A) and (B) of the Act, or other insurance coverage that does not meet the definition of commercial property and casualty insurance, but that includes incidental coverage for commercial risk exposures at such locations, is primarily not commercial property and casualty insurance, and therefore premiums for such insurance may also be fully excluded by an insurer from the calculation of direct earned premium. For purposes of this section, commercial property and casualty insurance for losses occurring at the locations described in section 102(5)(A) and (B) of the Act is incidental if less than 25 percent of the total direct earned premium for the insurance policy is attributable to coverage at such locations. Also for purposes of this section, coverage for commercial risk exposures is incidental if it is combined with coverages that otherwise do not meet the definition of commercial property and casualty insurance and less than 25 percent of the total direct earned premium for the insurance policy is attributable to the coverage for commercial risk exposures.

(iv) If a property and casualty insurance policy covers both commercial and personal risk exposures, insurers may allocate the premiums in accordance with the proportion of risk between commercial and personal components in order to ascertain direct earned premium. If a policy includes insurance coverage that meets the definition of commercial property and casualty insurance for losses occurring at the locations described in section 102(5)(A) and (B) of the Act, but also includes other coverage, insurers may allocate the premiums in accordance with the proportion of risk attributable to the components in order to ascertain direct earned premium.

(2) *Insurers that do not report to NAIC.* An insurer that does not report to the NAIC, but that is licensed or admitted by any State (such as certain farm or county mutual insurers), should use the guidance provided in paragraph (f)(1) of this section to assist in ascertaining its direct earned premium.

(i) Direct earned premium may be ascertained by adjusting data maintained by such insurer or reported by such insurer to its State regulator to reflect a breakdown of premiums for commercial and personal property and casualty exposure risk as described in paragraph (f)(1) of this section and, if necessary, re-stated to reflect the accrual method of determining direct earned premium versus direct premium.

(ii) Such an insurer should consider other types of payments that compensate the insurer for risk of loss (contributions, assessments, etc.) as part of its direct earned premium.

(3) *Certain eligible surplus line carrier insurers.* An eligible surplus line carrier insurer listed on the NAIC Quarterly Listing of Alien Insurers must ascertain its direct earned premium as follows:

(i) For policies that were inforce as of November 26, 2002, or entered into prior to January 1, 2003, direct earned premiums are to be determined with reference to the definition of property and casualty insurance and the locations described in section 102(5)(A) and (B) of the Act by allocating the appropriate portion of premium income for losses for property and casualty insurance at such locations. The same allocation methodologies contained within the NAIC's ''Allocation of Surplus Lines and Independently Procured Insurance Premium Tax on Multi-State Risks Model Regulation'' for allocating premium between coverage for property and casualty insurance for losses occurring at the locations described in section 102(5)(A) and (B) of the Act and all other coverage, to ascertain the appropriate percentage of premium income to be included in direct earned premium, may be used.

(ii) For policies issued after January 1, 2003, premium for insurance that meets the definition of property and casualty insurance for losses occurring at the locations described in section 102(5)(A) and (B) of the Act, must be priced separately by such eligible surplus line carriers.

(4) *Federally approved insurers.* A federally approved insurer under section 102(6)(A)(iii) of the Act should use a methodology similar to that specified for eligible surplus line carrier insurers in paragraph (f)(3) of this section to calculate its direct earned premium. Such calculation should be adjusted to reflect the limitations on scope of insurance coverage under the Program (*i.e.*, to the extent of federal approval of commercial property and casualty insurance in connection with maritime, energy or aviation activities).

(g) *Direct written premium*—means the premium information for commercial property and casualty insurance as defined in paragraph (u) of this section that is included by an insurer in column 1 of the Exhibit of Premiums and Losses of the NAIC Annual Statement or in an equivalent reporting requirement. The Federal Terrorism Policy Surcharge is not included in amounts reported as direct written premium.

(h) *Discretionary recoupment amount*—means such amount of the aggregate Federal share of compensation in excess of the mandatory recoupment amount that the Secretary has determined will be recouped pursuant to section 103(e)(7)(D) of the Act.

(i) *Federal Terrorism Policy Surcharge*—means the amount established by Treasury under section 103(e)(8) of the Act which is imposed as a policy surcharge on property and casualty insurance policies, expressed as a percentage of the written premium.

(j) *Insurance marketplace aggregate retention amount*—means an amount for a Program Year as set forth in section 103(e)(6) of the Act. For any Program Year beginning with 2008 through 2014, such amount is the lesser of $27,500,000,000 and the aggregate amount, for all insurers, of insured

losses from Program Trigger Events during the Program Year.

* * * * *

(n) *Mandatory recoupment amount*—means the difference between the insurance marketplace aggregate retention amount for a Program Year and the uncompensated insured losses during such Program Year. The mandatory recoupment amount shall be zero, however, if the amount of such uncompensated insured losses is greater than the insurance marketplace aggregate retention amount.

* * * * *

(x) *Surcharge effective date*—means the date established by Treasury that begins the assessment period.

* * * * *

(z) *Uncompensated insured losses*—means the aggregate amount of insured losses, from Program Trigger Events, of all insurers in a Program Year that is not compensated by the Federal Government because such losses:

(1) Are within the insurer deductibles of insurers, or

(2) Are within the portions of losses in excess of insurer deductibles that are not compensated through payments made as a result of claims for the Federal share of compensation.

* * * * *

3. Revise §§ 50.60 and 50.61 of Subpart G to read as follows:

**§ 50.60 Audit authority.**

The Secretary of the Treasury, or an authorized representative shall have, upon reasonable notice, access to all books, documents, papers and records of an insurer that are pertinent to amounts paid to the insurer as the Federal share of compensation for insured losses, or pertinent to any Federal Terrorism Policy Surcharge that is imposed pursuant to subpart H of this part, for the purpose of investigation, confirmation, audit and examination.

**§ 50.61 Recordkeeping.**

(a) Each insurer that seeks payment of a Federal share of compensation under Subpart F of this Part shall retain such records as are necessary to fully disclose all material matters pertinent to insured losses and the Federal share of compensation sought under the Program, including, but not limited to, records regarding premiums and insured losses for all commercial property and casualty insurance issued by the insurer and information relating to any adjustment in the amount of the Federal share of compensation payable. Insurers shall maintain detailed records for not less than five (5) years from the termination dates of all reinsurance agreements involving commercial property and casualty insurance subject to the Act. Records relating to premiums shall be retained and available for review for not less than three (3) years following the conclusion of the policy year. Records relating to underlying claims shall be retained for not less than five (5) years following the final adjustment of the claim.

(b) Each insurer that collects a Federal Terrorism Policy Surcharge as required by subpart H of this part shall retain records related to such Surcharge, including records of the property and casualty insurance premiums subject to the Surcharge, the amount of the Surcharge imposed on each policy, aggregate Federal Terrorism Policy Surcharges collected, and aggregate Federal Terrorism Policy Surcharges remitted to Treasury during each assessment period. Such records shall be retained and kept available for review for not less than three (3) years following the conclusion of the assessment period or settlement of accounts with Treasury, whichever is later.

4. Subpart H of part 50 is added to read as follows:

**Subpart H—Recoupment and Surcharge Procedures**

Sec.
50.70 Mandatory and discretionary recoupment.
50.71 Determination of recoupment amount.
50.72 Establishment of Federal Terrorism Policy Surcharge.
50.73 Notification of recoupment.
50.74 Collecting the Surcharge.
50.75 Remitting the Surcharge.
50.76 Insurer responsibility.

## Subpart H—Recoupment and Surcharge Procedures

**§ 50.70 Mandatory and discretionary recoupment.**

(a) Pursuant to section 103 of the Act, the Secretary shall impose and insurers shall collect, such Federal Terrorism Policy Surcharges as needed to recover 133 percent of the mandatory recoupment amount for any Program Year.

(b) In his discretion, the Secretary may recover any portion of the aggregate Federal share of compensation that exceeds the mandatory recoupment amount through Federal Terrorism Policy Surcharges based on the factors set forth in section 103(e)(7)(D) of the Act.

(c) If the Secretary is required to impose Federal Terrorism Policy Surcharges as provided in paragraph (a) of this section, then the required amounts shall be collected in accordance with section 103(e)(7)(E) of the Act:

(1) For any act of terrorism that occurs on or before December 31, 2010, the Secretary shall collect all required amounts by September 30, 2012;

(2) For any act of terrorism that occurs between January 1 and December 31, 2011, the Secretary shall collect 35 percent of any required amounts by September 30, 2012, and the remainder by September 30, 2017; and

(3) For any act of terrorism that occurs on or after January 1, 2012, the Secretary shall collect all required amounts by September 30, 2017.

**§ 50.71 Determination of recoupment amounts.**

(a) If payments for the Federal share of compensation have been made for a Program Year, and Treasury determines that insured loss information is sufficiently developed and credible to serve as a basis for calculating recoupment amounts, Treasury will make an initial determination of any mandatory or discretionary recoupment amounts for that Program Year.

(b) (1) Within 90 days after certification of an act of terrorism, the Secretary shall publish in the **Federal Register** an estimate of aggregate insured losses which shall be used as the basis for initially determining whether mandatory recoupment will be required.

(2) If at any time Treasury projects that payments for the Federal share of compensation will be made for a Program Year, and that in order to meet the collection timing requirements of section 103(e)(7)(E) of the Act it is necessary to use an estimate of such payments as a basis for calculating recoupment amounts, Treasury will make an initial determination of any mandatory recoupment amounts for that Program Year.

(c) Following the initial determination of recoupment amounts for a Program Year, Treasury will recalculate any mandatory or discretionary recoupment amount as necessary and appropriate, and at least annually, until a final recoupment amount for the Program Year is determined. Treasury will compare any recalculated recoupment amount to amounts already remitted and/or to be remitted to Treasury for Federal Terrorism Policy Surcharges previously established to determine whether any additional amount will be recouped by Treasury.

(d) For the purpose of determining initial or recalculated recoupment amounts, Treasury may issue a data call to insurers for insurer deductible and insured loss information by Program

Year. Treasury's determination of the aggregate amount of insured losses from Program Trigger Events of all insurers for a Program Year will be based on the amounts reported in response to a data call and any other information Treasury in its discretion considers appropriate. Submission of data in response to a data call shall be on a form promulgated by Treasury.

**§ 50.72 Establishment of Federal Terrorism Policy Surcharge.**

(a) Treasury will establish the Federal Terrorism Policy Surcharge based on the following factors and considerations:

(1) In the case of a mandatory recoupment amount, the requirement to collect 133 percent of that amount;

(2) The total dollar amount to be recouped as a percentage of the latest available annual aggregate industry direct written premium information;

(3) The adjustment factors for terrorism loss risk-spreading premiums described in Section 103(e)(8)(D) of the Act;

(4) The annual 3 percent limitation on terrorism loss risk-spreading premiums collected on a discretionary basis as provided in Section 103(e)(8)(C) of the Act;

(5) A preferred minimum initial assessment period of one full year and subsequent extension periods in full year increments;

(6) The collection timing requirements of section 103(e)(7)(E) of the Act;

(7) The likelihood that the amount of the Federal Terrorism Policy Surcharge may result in the collection of an aggregate recoupment amount in excess of the planned recoupment amount; and

(8) Such other factors as the Secretary considers important.

(b) The Federal Terrorism Policy Surcharge shall be the obligation of the policyholder and is payable to the insurer with the premium for a property and casualty insurance policy in effect during the assessment period established by Treasury. See § 50.74(c).

**§ 50.73 Notification of recoupment.**

(a) Treasury will provide notifications of recoupment through publication of Notices in the **Federal Register** or in another manner Treasury deems appropriate, based upon the circumstances of the act of terrorism under consideration.

(b) Treasury will provide reasonable advance notice to insurers of any initial Federal Terrorism Policy Surcharge effective date. This effective date shall be January 1, unless such date would not provide for sufficient notice of implementation while meeting the collection timing requirements of section 103(e)(7)(E) of the Act.

(c) Treasury will provide reasonable advance notice to insurers of any modification or cessation of the Federal Terrorism Policy Surcharge.

(d) Treasury will provide notification to insurers annually as to the continuation of the Federal Terrorism Policy Surcharge.

**§ 50.74 Collecting the Surcharge.**

(a) Insurers shall collect a Federal Terrorism Policy Surcharge from policyholders as required by Treasury.

(b) Policies subject to the Federal Terrorism Policy Surcharge are those for which direct written premium is reported on commercial lines of business on the NAIC's Exhibit of Premiums and Losses (commonly known as Statutory Page 14) as provided in § 50.5(u)(1), or equivalently reported.

(c) For policies subject to the Federal Terrorism Policy Surcharge, the Surcharge shall be imposed and collected on a written premium basis for policies in force during the assessment period. All new, renewal, mid-term, and audit additional premiums for a policy term are subject to the Surcharge in effect on the policy term effective date. For purposes of this subpart:

(1) Written premium basis means the premium amount charged a policyholder by an insurer for property and casualty insurance as defined in § 50.5(u), including all premiums, policy expense constants and fees defined as premium pursuant to the Statements of Statutory Accounting Principles established by the National Association of Insurance Commissioners.

(2) In the case of a policy providing multiple insurance coverages, if an insurer cannot identify the premium amount charged a policyholder specifically for property and casualty insurance under the policy, then:

(i) If the insurer estimates that the portion of the premium amount charged for coverage other than property and casualty insurance is de minimis to the total premium for the policy, the insurer may impose and collect from the policyholder a Surcharge amount based on the total premium for the policy, but

(ii) If the insurer estimates that the portion of the premium amount charged for coverage other than property and casualty insurance is not de minimis, the insurer shall impose and collect from the policyholder a Surcharge amount based on a reasonable estimate of the premium amount for the property and casualty insurance coverage under the policy.

(3) The Federal Terrorism Policy Surcharge is not considered premium.

(d) A policyholder must pay the applicable Federal Terrorism Policy Surcharge when due. The insurer shall have such rights and remedies to enforce the collection of the Surcharge that are the equivalent to those that exist under applicable state or other law for nonpayment of premium.

(e) When an insurer returns an unearned premium to a policyholder, it shall also return any Federal Terrorism Policy Surcharge collected that is attributable to the unearned premium.

(f) Notwithstanding paragraphs (a), (b), and (c) of this section, if the expense of collecting the Federal Terrorism Policy Surcharge from all policyholders of an insurer during an assessment period exceeds the amount of the Surcharge anticipated to be collected, such insurer may satisfy its obligation to collect by omitting actual collection and instead remitting to Treasury the amount otherwise due.

(g) The Federal Terrorism Policy Surcharge is repayment of Federal financial assistance in an amount required by law. No fee or commission shall be charged on the Federal Terrorism Policy Surcharge.

**§ 50.75 Remitting the Surcharge.**

(a) Each insurer shall provide a statement of direct written premium and Federal Terrorism Policy Surcharges to Treasury on a monthly basis, starting with the first month within the assessment period, through November of the calendar year and on an annual basis as of the last month of the calendar year. Reporting will be on a form prescribed by Treasury and will be due according to the following schedule:

(1) For each month beginning in the first month of the assessment period through November, the last business day of the calendar month following the month for which premium is reported, and

(2) March 1 for the calendar year.

(b) The monthly statements provided to Treasury will include the following:

(1) Cumulative calendar year direct written premium adjusted for premium not subject to the Federal Terrorism Policy Surcharge, summarized by policy year.

(2) The aggregate Federal Terrorism Policy Surcharge amount calculated by applying the established Surcharge percentage to the insurer's adjusted direct written premium by policy year.

(3) Insurer certification of the submission.

(c) The annual statements to be provided to Treasury will include the following:

(1) Direct written premium as defined in § 50.5(g), adjusted for premium not subject to the Federal Terrorism Policy Surcharge, summarized by policy year and by commercial line of insurance as specified in § 50.5(u).

(2) The aggregate Federal Terrorism Policy Surcharge amount calculated by applying the established Surcharge percentage to the insurer's adjusted direct written premium by policy year.

(3) In the case of an insurer that has chosen not to collect the Federal Terrorism Policy Surcharge from its policyholders as provided in § 50.74(f), a certification that the expense of collecting the Surcharge during the assessment period would have exceeded the amount of the Surcharge collected over the assessment period.

(4) Insurer certification of the submission.

(d) The calculated aggregate Federal Terrorism Policy Surcharge amount, as described in paragraphs (b)(2) and (c)(2) of this section, shall be remitted to Treasury upon submission of each monthly and annual statement. An insurer may request refund of any Federal Terrorism Policy Surcharges previously remitted to Treasury that were subsequently returned by the insurer to a policyholder as attributable to unearned premium under § 50.74(e). A negative calculated amount in a monthly or annual statement indicates payment from Treasury is due to the insurer.

(e) Reporting shall continue for the one-year period following the end of the assessment period established by Treasury, unless otherwise permitted by Treasury.

**§ 50.76 Insurer responsibility.**

For purposes of the collection, reporting and remittance of Federal Terrorism Policy Surcharges to Treasury, an ''insurer,'' as defined in § 50.5(l), shall not include any affiliate of the insurer.

**David G. Nason,**

*Assistant Secretary (Financial Institutions).*

[FR Doc. E8–21699 Filed 9–16–08; 8:45 am]

BILLING CODE 4810–25–P

## DEPARTMENT OF HOMELAND SECURITY

## Federal Emergency Management Agency

## 44 CFR Part 67

**[Docket No. FEMA–B–1004]**

## Proposed Flood Elevation Determinations

**AGENCY:** Federal Emergency Management Agency, DHS.

**ACTION:** Proposed rule.

**SUMMARY:** Comments are requested on the proposed Base (1 percent annual-chance) Flood Elevations (BFEs) and proposed BFE modifications for the communities listed in the table below. The purpose of this notice is to seek general information and comment regarding the proposed regulatory flood elevations for the reach described by the downstream and upstream locations in the table below. The BFEs and modified BFEs are a part of the floodplain management measures that the community is required either to adopt or show evidence of having in effect in order to qualify or remain qualified for participation in the National Flood Insurance Program (NFIP). In addition, these elevations, once finalized, will be used by insurance agents, and others to calculate appropriate flood insurance premium rates for new buildings and the contents in those buildings.

**DATES:** Comments are to be submitted on or before December 16, 2008.

**ADDRESSES:** The corresponding preliminary Flood Insurance Rate Map (FIRM) for the proposed BFEs for each community are available for inspection at the community's map repository. The respective addresses are listed in the table below.

You may submit comments, identified by Docket No. FEMA–B–1004, to William R. Blanton, Jr., Chief, Engineering Management Branch, Mitigation Directorate, Federal Emergency Management Agency, 500 C Street SW., Washington, DC 20472, (202) 646–3151, or (e-mail) *bill.blanton@dhs.gov.*

**FOR FURTHER INFORMATION CONTACT:** William R. Blanton, Jr., Chief, Engineering Management Branch, Mitigation Directorate, Federal Emergency Management Agency, 500 C Street SW., Washington, DC 20472, (202) 646–3151 or (e-mail) *bill.blanton@dhs.gov.*

**SUPPLEMENTARY INFORMATION:** The Federal Emergency Management Agency (FEMA) proposes to make determinations of BFEs and modified BFEs for each community listed below, in accordance with section 110 of the Flood Disaster Protection Act of 1973, 42 U.S.C. 4104, and 44 CFR 67.4(a).

These proposed BFEs and modified BFEs, together with the floodplain management criteria required by 44 CFR 60.3, are the minimum that are required. They should not be construed to mean that the community must change any existing ordinances that are more stringent in their floodplain management requirements. The community may at any time enact stricter requirements of its own, or pursuant to policies established by other Federal, State, or regional entities. These proposed elevations are used to meet the floodplain management requirements of the NFIP and are also used to calculate the appropriate flood insurance premium rates for new buildings built after these elevations are made final, and for the contents in these buildings.

Comments on any aspect of the Flood Insurance Study and FIRM, other than the proposed BFEs, will be considered. A letter acknowledging receipt of any comments will not be sent.

*Administrative Procedure Act Statement.* This matter is not a rulemaking governed by the Administrative Procedure Act (APA), 5 U.S.C. 553. FEMA publishes flood elevation determinations for notice and comment; however, they are governed by the Flood Disaster Protection Act of 1973, 42 U.S.C. 4105, and the National Flood Insurance Act of 1968, 42 U.S.C. 4001 *et seq.,* and do not fall under the APA.

*National Environmental Policy Act.* This proposed rule is categorically excluded from the requirements of 44 CFR part 10, Environmental Consideration. An environmental impact assessment has not been prepared.

*Regulatory Flexibility Act.* As flood elevation determinations are not within the scope of the Regulatory Flexibility Act, 5 U.S.C. 601–612, a regulatory flexibility analysis is not required.

*Executive Order 12866, Regulatory Planning and Review.* This proposed rule is not a significant regulatory action under the criteria of section 3(f) of Executive Order 12866, as amended.

*Executive Order 13132, Federalism.* This proposed rule involves no policies that have federalism implications under Executive Order 13132.

*Executive Order 12988, Civil Justice Reform.* This proposed rule meets the applicable standards of Executive Order 12988.

**List of Subjects in 44 CFR Part 67**

Administrative practice and procedure, Flood insurance, Reporting and recordkeeping requirements.

Accordingly, 44 CFR part 67 is proposed to be amended as follows:

## PART 67—[AMENDED]

1. The authority citation for part 67 continues to read as follows:

**Authority:** 42 U.S.C. 4001 *et seq.*; Reorganization Plan No. 3 of 1978, 3 CFR, 1978 Comp., p. 329; E.O. 12127, 44 FR 19367, 3 CFR, 1979 Comp., p. 376.

**§ 67.4 [Amended]**

2. The tables published under the authority of § 67.4 are proposed to be amended as follows:

| Flooding source(s) | Location of referenced elevation** | * Elevation in feet(NGVD) + Elevation in feet(NAVD) # Depth in feet above ground | | Communities affected |
|---|---|---|---|---|
| | | Effective | Modified | |
| **Orange County, California, and Incorporated Areas** | | | | |
| Aliso Creek | At confluence with Pacific Ocean | +2 | +14 | City of Laguna Beach, Unincorporated Areas of Orange County. |
| | Approximately 1.09 miles upstream of confluence with Pacific Ocean. | +40 | +41 | |
| Bluebird Canyon | At confluence with Pacific Ocean | None | +17 | City of Laguna Beach. |
| | Approximately 0.55 mile upstream of confluence with Pacific Ocean. | +125 | +124 | |
| Canyon Acres Wash | Approximately 70 feet upstream of confluence with Laguna Canyon. | None | +81 | City of Laguna Beach. |
| | Approximately 1,460 feet upstream of Lewellyn Drive | None | +185 | |
| Laguna Canyon | At confluence with Pacific Ocean | None | +15 | City of Laguna Beach, Unincorporated Areas of Orange County. |
| | Approximately 0.72 mile upstream of upstream most State Highway 73 crossing. | +343 | +344 | |

* National Geodetic Vertical Datum.
+ North American Vertical Datum.
# Depth in feet above ground.
** BFEs to be changed include the listed downstream and upstream BFEs, and include BFEs located on the stream reach between the referenced locations above. Please refer to the revised Flood Insurance Rate Map located at the community map repository (see below) for exact locations of all BFEs to be changed.

Send comments to William R. Blanton, Jr., Chief, Engineering Management Branch, Mitigation Directorate, Federal Emergency Management Agency, 500 C Street, SW., Washington, DC 20472.

**ADDRESSES**

**City of Laguna Beach**

Maps are available for inspection at Laguna Beach City Hall, 505 Forest Avenue, Laguna Beach, CA.

**Unincorporated Areas of Orange County**

Maps are available for inspection at Orange County Public Works Department, 300 North Flower Street, Santa Ana, CA.

| | | | | |
|---|---|---|---|---|
| **Calcasieu Parish, Louisiana, and Incorporated Areas** | | | | |
| | Base Flood Elevation changes ranging from 6 to 17 feet in the form of Coastal. | +5–14 | +6–17 | Unincorporated areas of Calcasieu Parish, City of Sulphur, City of Lake Charles, City of Westlake. |
| Gulf of Mexico | AE/VE zones have been made | | | |
| | Intersection with U.S. Highway 90 | +7 | +5 | |
| Bayou Choupique | Intersection with Southern Pacific Railroad line | +9 | +6 | Unincorporated areas of Calcasieu Parish. |

* National Geodetic Vertical Datum.
+ North American Vertical Datum.
# Depth in feet above ground.
** BFEs to be changed include the listed downstream and upstream BFEs, and include BFEs located on the stream reach between the referenced locations above. Please refer to the revised Flood Insurance Rate Map located at the community map repository (see below) for exact locations of all BFEs to be changed.

Send comments to William R. Blanton, Jr., Chief, Engineering Management Branch, Mitigation Directorate, Federal Emergency Management Agency, 500 C Street, SW., Washington, DC 20472.

**ADDRESSES**

**City of Westlake**

Maps are available for inspection at 1001 Mullberry Street, Westlake, LA 70669.

**Unincorporated Areas of Calasieu Parish**

Maps are available for inspection at 1015 Pithon Street, Lake Charles, LA 70602.

**City of Sulphur**

| Flooding source(s) | Location of referenced elevation** | * Elevation in feet(NGVD) + Elevation in feet(NAVD) # Depth in feet above ground | | Communities affected |
|---|---|---|---|---|
| | | Effective | Modified | |
| Maps are available for inspection at 500 North Huntington Street, Sulphur, LA 70664. | | | | |
| **City of Lake Charles** | | | | |
| Maps are available for inspection at 326 Pujo Street, Lake Charles, LA 70602. | | | | |
| **Alleghany County, North Carolina, and Incorporated Areas** | | | | |
| Bledsoe Creek | At the confluence with Little River | None | +2752 | Alleghany County, Town of Sparta. |
| | Approximately 920 feet upstream of Green Needles Lane. | None | +2919 | |
| Bledsoe Creek Tributary 1 | At the confluence with Bledsoe Creek | None | +2759 | Town of Sparta. |
| | Approximately 110 feet upstream of Cherry Street | None | +2896 | |
| Brush Creek | At the confluence with Little River | None | +2443 | Alleghany County. |
| | Approximately 1.6 miles upstream of Fox Ridge Road | None | +2522 | |
| Crab Creek | At the confluence with Little River | None | +2337 | Alleghany County. |
| | Approximately 0.6 mile upstream of the confluence with Little River. | None | +2366 | |
| Cranberry Creek | At the Alleghany/Ashe County boundary | None | +2739 | Alleghany County. |
| | Approximately 850 feet upstream of the Alleghany/Ashe County boundary. | None | +2743 | |
| Glade Creek | At the confluence with Little River | None | +2499 | Alleghany County. |
| | Approximately 1.4 miles upstream of the confluence of Glade Creek Tributary 2. | None | +2529 | |
| Glade Creek Tributary 1 | At the confluence with Glade Creek | None | +2501 | Alleghany County. |
| | Approximately 0.4 mile upstream of Fox Den Lane | None | +2565 | |
| Glade Creek Tributary 2 | At the confluence with Glade Creek | None | +2509 | Alleghany County. |
| | Approximately 0.8 mile upstream of the confluence with Glade Creek. | None | +2579 | |
| Little River | Approximately 1,100 feet downstream of the confluence of Crab Creek. | None | +2333 | Alleghany County, Town of Sparta. |
| | Approximately 1.0 mile upstream of the confluence of Little River Tributary 2. | None | +2851 | |
| Little River Tributary 1 | At the confluence with Little River | None | +2587 | Alleghany County. |
| | Approximately 1,950 feet upstream of the confluence with Little River. | None | +2660 | |
| Little River Tributary 2 | At the confluence with Little River | None | +2829 | Alleghany County, Town of Sparta. |
| | Approximately 0.7 mile upstream of the confluence with Little River. | None | +2905 | |
| Moccasin Creek | At the confluence with Little River | None | +2431 | Alleghany County. |
| | Approximately 0.6 mile upstream of the confluence with Little River. | None | +2480 | |
| New River | Approximately 0.4 mile downstream of the confluence with New River Tributary 1. | None | +2318 | Alleghany County. |
| | At the confluence of South Fork New River and North Fork New River. | None | +2487 | |
| New River Tributary 1 | Approximately 200 feet upstream of the confluence with New River. | None | +2319 | Alleghany County. |
| | Approximately 0.7 mile upstream of the confluence with New River. | None | +2364 | |
| New River Tributary 2 | At the confluence with New River | None | +2339 | Alleghany County. |
| | Approximately 1,720 feet upstream of Riverwood Lane. | None | +2390 | |
| Pine Swamp Creek | At the confluence with Little River | None | +2803 | Alleghany County. |
| | Approximately 0.7 mile upstream of Grandview Drive (State Road 1172). | None | +2818 | |
| South Fork New River | At the confluence with New River | None | +2487 | Alleghany County. |
| | Approximately 1.4 miles upstream of the confluence of South Fork New River Tributary 2. | None | +2526 | |
| South Fork New River Tributary 1. | At the confluence with South Fork New River | None | +2509 | Alleghany County. |
| | Approximately 0.5 mile upstream of the confluence with South Fork New River. | None | +2535 | |
| South Fork New River Tributary 2. | At the confluence with South Fork New River | None | +2516 | Alleghany County. |
| | Approximately 0.7 mile upstream of the confluence with South Fork New River. | None | +2572 | |
| Vile Creek | At the confluence with Little River | None | +2674 | Alleghany County, Town of Sparta. |

| Flooding source(s) | Location of referenced elevation** | * Elevation in feet(NGVD) + Elevation in feet(NAVD) # Depth in feet above ground | | Communities affected |
|---|---|---|---|---|
| | | Effective | Modified | |
| Vile Creek Tributary 1 | Approximately 1,660 feet upstream of NC Highway 18 | None | +2759 | Alleghany County, Town of Sparta. |
| | At the confluence with Vile Creek | None | +2695 | |
| | Approximately 0.4 mile upstream of the confluence with Vile Creek. | None | +2751 | |

* National Geodetic Vertical Datum.
+ North American Vertical Datum.
# Depth in feet above ground.
** BFEs to be changed include the listed downstream and upstream BFEs, and include BFEs located on the stream reach between the referenced locations above. Please refer to the revised Flood Insurance Rate Map located at the community map repository (see below) for exact locations of all BFEs to be changed.

Send comments to William R. Blanton, Jr., Chief, Engineering Management Branch, Mitigation Directorate, Federal Emergency Management Agency, 500 C Street, SW., Washington, DC 20472.

**ADDRESSES**

**Alleghany County**

Maps are available for inspection at Alleghany County Planning Department, County Administration Building, 348 South Main Street, Sparta, NC.

**Town of Sparta**

Maps are available for inspection at Sparta Town Hall, 304 South Main Street, Sparta, NC.

**Watauga County, North Carolina, and Incorporated Areas**

| | | | | |
|---|---|---|---|---|
| Boone Creek | At the confluence with Winkler Creek | +3120 | +3122 | Town of Boone. |
| | Approximately 350 feet upstream of West King Street | None | +3311 | |
| Cobb Creek | At the confluence with Meat Camp Creek | None | +3169 | Unincorporated Areas of Watauga County. |
| | Approximately 1,540 feet upstream of Cobbs Creek Road (State Road 1325). | None | +3307 | |
| Elk Creek | Approximately 100 feet downstream of the Watauga/Wilkes County boundary. | None | +1349 | Unincorporated Areas of Watauga County. |
| | Approximately 1.1 miles upstream of Jakes Mountain Road. | None | +2135 | |
| Elk Creek (into South Fork River). | Approximately 50 feet upstream of Big Hill Road (State Road 1350). | None | +2955 | Unincorporated Areas of Watauga County. |
| | Approximately 250 feet upstream of State Road 194 | None | +2982 | |
| Flannery Fork | At the confluence with Winkler Creek | None | +3253 | Unincorporated Areas of Watauga County, Town of Boone. |
| | Approximately 430 feet upstream of Sky Ranch Road | None | +3469 | |
| Gap Creek | At the Watauga/Ashe County boundary | None | +2952 | Unincorporated Areas of Watauga County. |
| | Approximately 160 feet upstream of James Parsons Road. | None | +3076 | |
| Hodges Creek | Approximately 430 feet upstream of the confluence with Boone Creek. | +3126 | +3127 | Town of Boone. |
| | Approximately 140 feet upstream of NC 105 Highway | None | +3286 | |
| Howard Creek | Approximately 1,440 feet upstream of Moss Hill Road | None | +3212 | Unincorporated Areas of Watauga County. |
| | Approximately 0.6 mile upstream of Millers Pond Lane. | None | +3418 | |
| Left Prong Stony Fork | At the Watauga/Wilkes County boundary | None | +1639 | Unincorporated Areas of Watauga County. |
| | Approximately 220 feet upstream of the confluence of Wildcat Creek. | None | +1947 | |
| Meat Camp Creek | At the confluence with South Fork New River | +3057 | +3058 | Unincorporated Areas of Watauga County. |
| | Approximately 1.1 miles upstream of Bryan Hollow Road (State Road 1339). | None | +3495 | |
| Meat Camp Creek Tributary | At the confluence with Meat Camp Creek | None | +3156 | Unincorporated Areas of Watauga County. |
| | Approximately 1,160 feet upstream of NC 194 Highway North. | None | +3213 | |
| Middle Fork | Approximately 500 feet downstream of Shoppes On The Parkway Road. | +3458 | +3455 | Unincorporated Areas of Watauga County, Town of Blowing Rock. |
| | Approximately 0.4 mile upstream of Goforth Road | None | +3630 | |

| Flooding source(s) | Location of referenced elevation** | * Elevation in feet(NGVD) + Elevation in feet(NAVD) # Depth in feet above ground | | Communities affected |
|---|---|---|---|---|
| | | Effective | Modified | |
| Norris Fork | At the confluence with Meat Camp Creek | None | +3200 | Unincorporated Areas of Watauga County. |
| | Approximately 0.4 mile upstream of the confluence with Meat Camp Creek. | None | +3248 | |
| Pine Orchard Creek | At the confluence with Elk Creek (into South Fork New River). | None | +2974 | Unincorporated Areas of Watauga County. |
| | Approximately 0.7 mile upstream of the confluence with Elk Creek (into South Fork New River). | None | +3041 | |
| Stony Fork | At the Watauga/Wilkes County boundary | None | +1975 | Unincorporated Areas of Watauga County. |
| | Approximately 40 feet downstream of Stoney Fork Road. | None | +2265 | |
| Stony Fork Tributary | At the confluence with Stony Fork | None | +2260 | Unincorporated Areas of Watauga County. |
| | Approximately 1,470 feet upstream of Stoney Fork Road. | None | +2341 | |
| Unnamed Tributary to Middle Fork. | At the confluence with Middle Fork | +3479 | +3477 | Unincorporated Areas of Watauga County, Town of Blowing Rock. |
| | Approximately 0.7 mile upstream of Chetola Lake Drive. | None | +3546 | |
| Wildcat Creek | At the confluence with Left Prong Stony Fork | None | +1941 | Unincorporated Areas of Watauga County. |
| | Approximately 0.6 mile upstream of Bill Miller Lane | None | +2469 | |
| Winkler Creek | Approximately 150 feet downstream of Pride Drive | +3114 | +3113 | Unincorporated Areas of Watauga County, Town of Boone. |
| | Approximately 300 feet upstream of Rainbow Mountain Road. | None | +3442 | |

* National Geodetic Vertical Datum.
+ North American Vertical Datum.
# Depth in feet above ground.
** BFEs to be changed include the listed downstream and upstream BFEs, and include BFEs located on the stream reach between the referenced locations above. Please refer to the revised Flood Insurance Rate Map located at the community map repository (see below) for exact locations of all BFEs to be changed.

Send comments to William R. Blanton, Jr., Chief, Engineering Management Branch, Mitigation Directorate, Federal Emergency Management Agency, 500 C Street, SW., Washington, DC 20472.

**ADDRESSES**

**Town of Blowing Rock**

Maps are available for inspection at Blowing Rock Town Hall, 1036 Main Street, Blowing Rock, NC.

**Town of Boone**

Maps are available for inspection at Town of Boone Planning and Inspections Office, 1500 Blowing Rock Road, Boone, NC.

**Unincorporated Areas of Watauga County**

Maps are available for inspection at Watauga County Planning and Inspections Department, 331 Queen Street, Suite 8, Boone, NC.

**Grant County, South Dakota, and Incorporated Areas**

| | | | | |
|---|---|---|---|---|
| South Fork Whetstone River | Approximately 48 feet upstream of 479th Avenue | None | +1116 | City of Milbank, Unincorporated Areas of Grant County. |
| | Approximately 790 feet upstream of North Dakota Street. | None | +1132 | |

* National Geodetic Vertical Datum.
+ North American Vertical Datum.
# Depth in feet above ground.
** BFEs to be changed include the listed downstream and upstream BFEs, and include BFEs located on the stream reach between the referenced locations above. Please refer to the revised Flood Insurance Rate Map located at the community map repository (see below) for exact locations of all BFEs to be changed.

Send comments to William R. Blanton, Jr., Chief, Engineering Management Branch, Mitigation Directorate, Federal Emergency Management Agency, 500 C Street, SW., Washington, DC 20472.

**ADDRESSES**

**City of Milbank**

Maps are available for inspection at Milbank City Offices, 1001 East 4th Avenue, Milbank, SD.

| Flooding source(s) | Location of referenced elevation** | * Elevation in feet(NGVD) + Elevation in feet(NAVD) # Depth in feet above ground | | Communities affected |
|---|---|---|---|---|
| | | Effective | Modified | |
| **Unincorporated Areas of Grant County** | | | | |
| Maps are available for inspection at Grant County Courthouse, 210 East 5th Avenue, Milbank, SD. | | | | |

(Catalog of Federal Domestic Assistance No. 97.022, ''Flood Insurance.'')

Dated: September 4, 2008.

**Michael K. Buckley,**

*Deputy Assistant Administrator for Mitigation, Department of Homeland Security, Federal Emergency Management Agency.*

[FR Doc. E8–21687 Filed 9–16–08; 8:45 am]

**BILLING CODE 9110–12–P**

## DEPARTMENT OF HOMELAND SECURITY

## Federal Emergency Management Agency

## 44 CFR Part 67

**[Docket No. FEMA–B–1006]**

## Proposed Flood Elevation Determinations

**AGENCY:** Federal Emergency Management Agency, DHS.

**ACTION:** Proposed rule.

**SUMMARY:** Comments are requested on the proposed Base (1 percent annual-chance) Flood Elevations (BFEs) and proposed BFE modifications for the communities listed in the table below. The purpose of this notice is to seek general information and comment regarding the proposed regulatory flood elevations for the reach described by the downstream and upstream locations in the table below. The BFEs and modified BFEs are a part of the floodplain management measures that the community is required either to adopt or show evidence of having in effect in order to qualify or remain qualified for participation in the National Flood Insurance Program (NFIP). In addition, these elevations, once finalized, will be used by insurance agents, and others to calculate appropriate flood insurance premium rates for new buildings and the contents in those buildings.

**DATES:** Comments are to be submitted on or before December 16, 2008.

**ADDRESSES:** The corresponding preliminary Flood Insurance Rate Map (FIRM) for the proposed BFEs for each community are available for inspection at the community's map repository. The respective addresses are listed in the table below.

You may submit comments, identified by Docket No. FEMA–B–1006, to William R. Blanton, Jr., Chief, Engineering Management Branch, Mitigation Directorate, Federal Emergency Management Agency, 500 C Street SW., Washington, DC 20472, (202) 646–3151, or (e-mail) *bill.blanton@dhs.gov.*

**FOR FURTHER INFORMATION CONTACT:** William R. Blanton, Jr., Chief, Engineering Management Branch, Mitigation Directorate, Federal Emergency Management Agency, 500 C Street SW., Washington, DC 20472, (202) 646–3151 or (e-mail) *bill.blanton@dhs.gov.*

**SUPPLEMENTARY INFORMATION:** The Federal Emergency Management Agency (FEMA) proposes to make determinations of BFEs and modified BFEs for each community listed below, in accordance with section 110 of the Flood Disaster Protection Act of 1973, 42 U.S.C. 4104, and 44 CFR 67.4(a).

These proposed BFEs and modified BFEs, together with the floodplain management criteria required by 44 CFR 60.3, are the minimum that are required. They should not be construed to mean that the community must change any existing ordinances that are more stringent in their floodplain management requirements. The community may at any time enact stricter requirements of its own, or pursuant to policies established by other Federal, State, or regional entities. These proposed elevations are used to meet the floodplain management requirements of the NFIP and are also used to calculate the appropriate flood insurance premium rates for new buildings built after these elevations are made final, and for the contents in these buildings.

Comments on any aspect of the Flood Insurance Study and FIRM, other than the proposed BFEs, will be considered. A letter acknowledging receipt of any comments will not be sent.

*Administrative Procedure Act Statement.* This matter is not a rulemaking governed by the Administrative Procedure Act (APA), 5 U.S.C. 553. FEMA publishes flood elevation determinations for notice and comment; however, they are governed by the Flood Disaster Protection Act of 1973, 42 U.S.C. 4105, and the National Flood Insurance Act of 1968, 42 U.S.C. 4001 *et seq.,* and do not fall under the APA.

*National Environmental Policy Act.* This proposed rule is categorically excluded from the requirements of 44 CFR part 10, Environmental Consideration. An environmental impact assessment has not been prepared.

*Regulatory Flexibility Act.* As flood elevation determinations are not within the scope of the Regulatory Flexibility Act, 5 U.S.C. 601–612, a regulatory flexibility analysis is not required.

*Executive Order 12866, Regulatory Planning and Review.* This proposed rule is not a significant regulatory action under the criteria of section 3(f) of Executive Order 12866, as amended.

*Executive Order 13132, Federalism.* This proposed rule involves no policies that have federalism implications under Executive Order 13132.

*Executive Order 12988, Civil Justice Reform.* This proposed rule meets the applicable standards of Executive Order 12988.

### List of Subjects in 44 CFR Part 67

Administrative practice and procedure, Flood insurance, Reporting and recordkeeping requirements.

Accordingly, 44 CFR part 67 is proposed to be amended as follows:

## PART 67—[AMENDED]

1. The authority citation for part 67 continues to read as follows:

**Authority:** 42 U.S.C. 4001 *et seq.;* Reorganization Plan No. 3 of 1978, 3 CFR, 1978 Comp., p. 329; E.O. 12127, 44 FR 19367, 3 CFR, 1979 Comp., p. 376.

### § 67.4 [Amended]

2. The tables published under the authority of § 67.4 are proposed to be amended as follows:

| Flooding source(s) | Location of referenced elevation ** | * Elevation in feet (NGVD) + Elevation in feet (NAVD) # Depth in feet above ground | | Communities affected |
|---|---|---|---|---|
| | | Effective | Modified | |
| **Athens County, Ohio, and Incorporated Areas** | | | | |
| Hocking River | Approximately 3,200 feet downstream of State Route 144 | None | +602 | Village of Coolville. |
| | Just downstream of State Route 144 | None | +602 | |
| Hocking River | Approximately 16,000 feet upstream of Highway 50 | None | +625 | Unincorporated Areas of Athens County. |
| | Approximately 100 feet upstream of S. Canaan Road | +631 | +629 | |
| | At Chessie System Railroad | +650 | +649 | |
| | Approximately 1,500 feet upstream of Chessie System Railroad. | +650 | +649 | |
| Hocking River | At confluence with Sunday Creek | +660 | +661 | Village of Chauncey. |
| | Approximately 150 feet upstream of Conrail Railroad | +660 | +661 | |
| Margaret Creek | Approximately 500 feet upstream of State Highway 682 | None | +649 | Unincorporated Areas of Athens County, City of Athens. |
| | Approximately 550 feet downstream of State Highway 56 | None | +649 | |
| Sunday Creek | Approximately 240 feet downstream of Railroad at Village of Trimble/Athens County Unincorporated Areas Boundary. | None | +679 | Unincorporated Areas of Athens County. |
| | Just upstream of Railroad at Village of Trimble/Athens County Unincorporated Areas Boundary. | None | +680 | |
| Sunday Creek | At State Highway 13 | +660 | +661 | Village of Chauncey. |
| | Approximately 4,600 feet upstream of State Highway 13 | +660 | +661 | |
| Sunday Creek | Approximately 240 feet downstream of Railroad at Village of Trimble/Athens County Unincorporated Areas Boundary. | None | +679 | Village of Jacksonville. |
| | Just upstream of Railroad at Village of Trimble/Athens County Unincorporated Areas Boundary. | None | +680 | |
| Sunday Creek | Just upstream of Railroad at Village of Trimble/Athens County Unincorporated Areas Boundary. | None | +680 | Village of Trimble. |
| | Approximately 850 feet Upstream of Center Street | None | +682 | |

* National Geodetic Vertical Datum.
+ North American Vertical Datum.
# Depth in feet above ground.

** BFEs to be changed include the listed downstream and upstream BFEs, and include BFEs located on the stream reach between the referenced locations above. Please refer to the revised Flood Insurance Rate Map located at the community map repository (see below) for exact locations of all BFEs to be changed.

Send comments to William R. Blanton, Jr., Chief, Engineering Management Branch, Mitigation Directorate, Federal Emergency Management Agency, 500 C Street SW., Washington, DC 20472.

**ADDRESSES**

**City of Athens**

Maps are available for inspection at 28 Curran Drive, Athens, OH 45701.

**Unincorporated Areas of Athens County**

Maps are available for inspection at 28 Curran Drive, Athens, OH 45701.

**Village of Chauncey**

Maps are available for inspection at 28 Curran Drive, Athens, OH 45701.

**Village of Coolville**

Maps are available for inspection at 28 Curran Drive, Athens, OH 45701.

**Village of Jacksonville**

Maps are available for inspection at 28 Curran Drive, Athens, OH 45701.

**Village of Trimble**

Maps are available for inspection at 15 Congress Street, Trimble, OH 45782.

(Catalog of Federal Domestic Assistance No. 97.022, ''Flood Insurance.'')

Dated: September 8, 2008.

**David I. Maurstad,**

*Federal Insurance Administrator of the National Flood Insurance Program, Department of Homeland Security, Federal Emergency Management Agency.*

[FR Doc. E8–21688 Filed 9–16–08; 8:45 am]

**BILLING CODE 9110–12–P**

## DEPARTMENT OF COMMERCE

### National Oceanic and Atmospheric Administration

### 50 CFR Part 679

**RIN 0648–AU20**

### Fisheries of the Exclusive Economic Zone Off Alaska; Revised Management Authority for Dark Rockfish in the Bering Sea and Aleutian Islands Management Area and the Gulf of Alaska

**AGENCY:** National Marine Fisheries Service (NMFS), National Oceanic and Atmospheric Administration (NOAA), Commerce.

**ACTION:** Availability of a proposed amendment to a fishery management plan; request for comments.

**SUMMARY:** The North Pacific Fishery Management Council has submitted Amendment 73 to the Fishery Management Plan for Groundfish of the Bering Sea and Aleutian Islands Management Area and Amendment 77 to the Fishery Management Plan for Groundfish of the Gulf of Alaska (collectively, Amendments 73/77) for Secretarial (Commerce) approval. If approved, Amendments 73/77 would remove dark rockfish (*Sebastes ciliatus*) from both fishery management plans (FMPs). Consequently, the State of Alaska would then assume management of dark rockfish in the Bering Sea and Aleutian Islands Management Area and the Gulf of Alaska. This action is necessary to allow the State of Alaska to implement more responsive, regionally based management of dark rockfish than is currently possible under the FMPs. This action would improve conservation and management of dark rockfish and is intended to promote the goals and objectives of the Magnuson-Stevens Fishery Conservation and Management Act, the FMPs, and other applicable laws.

**DATES:** Comments on the proposed amendments must be received on or before November 17, 2008.

**ADDRESSES:** Send comments to Sue Salveson, Assistant Regional Administrator, Sustainable Fisheries Division, Alaska Region, NMFS, Attn: Ellen Sebastian. You may submit comments, identified by RIN 0648–AU20 by any one of the following methods:

- Electronic Submissions: Submit all electronic public comments via the Federal eRulemaking Portal website at *http://www.regulations.gov*.
- Mail: P. O. Box 21668, Juneau, AK 99802.
- Fax: (907) 586–7557.
- Hand delivery to the Federal Building: 709 West 9th Street, Room 420A, Juneau, AK.

All comments received are a part of the public record and will generally be posted to *http://www.regulations.gov* without change. All Personal Identifying Information (e.g., name, address, etc.) voluntarily submitted by the commenter may be publicly accessible. Do not submit Confidential Business Information or otherwise sensitive or protected information.

NMFS will accept anonymous comments (enter N/A in the required fields, if you wish to remain anonymous). Attachments to electronic comments will be accepted in Microsoft Word, Excel, WordPerfect, or Adobe portable document file (pdf) formats only.

Copies of Amendments 73/77 and the Environmental Assessment/Regulatory Impact Review/Initial Regulatory Flexibility Analysis (EA/RIR/IRFA) prepared for this action are available from the Alaska Region NMFS at the address above or from the Alaska Region NMFS website at *http://alaskafisheries.noaa.gov*.

**FOR FURTHER INFORMATION CONTACT:** Jennifer Hogan, 907–586–7228.

**SUPPLEMENTARY INFORMATION:** The Magnuson-Stevens Fishery Conservation and Management Act (Magnuson-Stevens Act) requires that each Regional Fishery Management Council submit any fishery management plan (FMP) amendment it prepares to the Secretary for review and approval, disapproval, or partial approval. The Magnuson-Stevens Act also requires that NMFS, upon receiving an FMP amendment, immediately publish a notice in the **Federal Register** that the amendment is available for public review and comment. This action constitutes such notice for Amendments 73/77 to the FMPs.

Amendments 73/77 were unanimously adopted by the North Pacific Fishery Management Council (Council) in April 2007. If approved by the Secretary, these amendments would remove dark rockfish (*Sebastes ciliatus*) from the FMPs and would thereby allow the State of Alaska (State) to extend its management authority for dark rockfish into Federal waters off the State.

The Council recommended Amendments 73/77 because dark rockfish are a nearshore, shallow-water species which are rarely caught in offshore Federal waters. Dark rockfish currently are contained in the pelagic shelf rockfish (PSR) complex in the Gulf of Alaska. The overfishing limit and acceptable biological catch limit for PSR are based primarily on the stock assessment for dusky rockfish. Dusky rockfish comprise the majority of the total exploitable biomass estimate for the PSR complex. In the Bering Sea and Aleutian Islands management area, dark rockfish are contained within the ''other rockfish'' complex, the biomass of which is largely comprised of dusky rockfish and thornyhead rockfish. Under Amendments 73/77, the State could implement more responsive, regionally based management of dark rockfish than is possible under the FMPs. State management would reduce the possibility of overexploitation and localized depletion of dark rockfish that could occur if it is continued to be managed within the larger PSR and ''other rockfish'' complexes under the FMPs.

NMFS is soliciting public comments on Amendments 73/77 through November 17, 2008. A proposed rule that would implement Amendments 73/77 will be published in the **Federal Register** for public comment at a later date, following NMFS' evaluation under the Magnuson-Stevens Act procedures.

Comments received by November 17, 2008, whether specifically directed to the amendments or the proposed rule will be considered in the approval/disapproval decision on Amendments 73/77. Comments received after that date will not be considered in the FMP amendment approval/disapproval decision. All comments received on Amendments 73/77 or on the proposed rule during their respective comment periods will be addressed in the final rule.

**Authority:** 16 U.S.C. 1801 *et seq.*

Dated: September 11, 2008.

**James P. Burgess**

*Acting Director, Office of Sustainable Fisheries, National Marine Fisheries Service.*

[FR Doc. E8–21745 Filed 9–16–08; 8:45 am]

**BILLING CODE 3510–22–S**

# Notices

Federal Register

Vol. 73, No. 181

Wednesday, September 17, 2008

This section of the FEDERAL REGISTER contains documents other than rules or proposed rules that are applicable to the public. Notices of hearings and investigations, committee meetings, agency decisions and rulings, delegations of authority, filing of petitions and applications and agency statements of organization and functions are examples of documents appearing in this section.

## DEPARTMENT OF AGRICULTURE

### Office of the Secretary

### Privacy Act of 1974; Abolish System of Records

**AGENCY:** Office of the Secretary, USDA.

**ACTION:** Notice of abolishment of Department of Agriculture System of Records, USDA/FS–12 Incident Management and Prescribed Fire Qualification and Experience Records.

**SUMMARY:** The records formerly maintained in the Privacy Act System of Records, USDA/FS–12 Incident Management and Prescribed Fire Qualification and Experience Records are now maintained in another Privacy Act System of Records USDA/BLM–40 Incident Qualification and Certification System (IQCS). Therefore, this system is being abolished and removed from the inventory of USDA Systems of Records in accordance with the Privacy Act of 1974 (5 U.S.C. 552a), as amended.

**DATES:** This notice is effective on September 17, 2008.

**ADDRESSES:** For additional information contact the Director of Fire and Aviation Management, Forest Service, U.S. Department of Agriculture, 1400 Independence Avenue, SW., Mailstop 1107, Washington, DC 20250–1107.

**FOR FURTHER INFORMATION CONTACT:** Tom Harbour, Director of Fire and Aviation Management, Forest Service, U.S. Department of Agriculture, telephone: (202) 205–1483.

**SUPPLEMENTARY INFORMATION:** The Privacy Act of 1974 (5 U.S.C. 552a), as amended, requires that each agency publish a notice of the existence and character of each new or altered ''system of records.'' 5 U.S.C. 552a(a)(5). This notice identifies a Forest Service System of Records that is no longer in use, USDA/FS–12 Incident Management and Prescribed Fire Qualification and Experience Records. The records which were formerly maintained in this system are now maintained in another Privacy Act System of Records, USDA/BLM–40 Incident and Certification System (IQCS); as published in the **Federal Register** on February 6, 2008. The System of Records, USDA/FS–12, Incident Management and Prescribed Fire Qualification and Experience Records is abolished as absolute and no longer used, and it is removed from the inventory of the USDA System of Records.

Dated: September 3, 2008.

**Edward T. Schafer,**

*Secretary.*

[FR Doc. E8–21726 Filed 9–16–08; 8:45 am]

BILLING CODE 3410–11–P

## DEPARTMENT OF AGRICULTURE

### Forest Service

### Determination of Substantial Overriding Public Interest for Extending Certain Timber Sale Contracts

**AGENCY:** Forest Service, USDA.

**ACTION:** Notice of Determination of Substantial Overriding Public Interest.

**SUMMARY:** Pursuant to section 472a(c) of the National Forest Management Act of 1976 (NFMA), and the authority delegated at 7 CFR 2.20, the Under Secretary of Agriculture for Natural Resources and Environment has determined that the substantial overriding public interest (SOPI) justifies the use of market-related contract term adjustments (MRCTA) to extend beyond 10 years, certain existing green timber sale contracts tied to Softwood Lumber index #0811 and Hardwood Lumber index #0812 that were awarded prior to January 1, 2007. This SOPI determination is based on the sustained drastic reduction in softwood lumber prices since 2004 and the more recent hardwood lumber decline.

**DATES:** The determination was made on September 10, 2008 by the Under Secretary of Agriculture for Natural Resources and Environment.

**FOR FURTHER INFORMATION CONTACT:** Lathrop Smith, Forest Management Staff, (202) 205–0858 or Richard Fitzgerald, Forest Management Staff (202) 205–1753; 1400 Independence Ave., SW., Mailstop 1103, Washington, DC 20250–1103.

Individuals who use telecommunication devices for the deaf (TDD) may call the Federal Information Relay Service (FIRS) at 1–800–877–8339 between 8 a.m. and 8 p.m., Eastern Standard Time, Monday through Friday.

**Background**

Section 472a(c) of NFMA provides, in part, as follows:

> Unless there is a finding by the Secretary of Agriculture that better utilization of the various forest resources (consistent with the provisions of the Multiple-Use, Sustained-Yield Act of 1960) will result, sales contracts shall be for a period not to exceed 10 years: Provided, That such period may be adjusted at the discretion of the Secretary to provide additional time due to time delays caused by an act of an agent of the United States or by other circumstances beyond the control of the purchaser.[1]

Although the Forest Service generally does not allow the extension of timber sale contracts beyond 10 years, the Secretary of Agriculture may extend such contracts beyond 10 years if he determines doing so will result in the better utilization of the various forest resources. However, the Secretary ''shall not extend any contract period with an original term of 2 years or more unless he finds (A) that the purchaser has diligently performed in accordance with an approved plan of operation or (B) that the substantial overriding public interest justifies the extension.''[2]

The Under Secretary of Agriculture for Natural Resources and Environment has determined that a healthy timber industry infrastructure results in the better utilization of the various forest resources. The grant of additional MRCTA time to purchasers eligible for relief under this SOPI is intended to help maintain that infrastructure by preventing timber sale purchasers from defaulting on their contracts, closing their mills, and filing for bankruptcy protection. Having numerous economically viable timber sale purchasers is in the substantial overriding public interest for many reasons, including the following: (1) It allows the Forest Service to accomplish land management objectives in a cost-effective manner; (2) it increases competition for National Forest System timber sales and can result in higher prices paid for timber; (3) it helps

[1] 16 U.S.C. 472a(c).

[2] *Id.*

provide a continuous timber supply to the public in accordance with the Organic Administration Act; (4) it helps accomplish fuels reduction projects; and (5) it helps maintain the economic stability of communities dependent upon the timber industry.

MRCTA relief granted pursuant to this SOPI must be made in accordance with 36 CFR 223.52, subject to the following exceptions:

(a) Notwithstanding 36 CFR 223.52(c)(3), up to 4 years may be added to a contract's length by MRCTA;

(b) Notwithstanding 36 CFR 223.52(c)(4), the revised contract term may exceed 10 years; and

(c) No contract subject to this SOPI may have its termination date extended past December 31, 2013.

Periodic payments shall be adjusted pursuant to 36 CFR 223.52(d).

The following types of contracts are not eligible for relief under this SOPI: (1) Contracts the Forest Service determines are in urgent need of harvesting for reasons including, but not limited to, deteriorating timber conditions or public safety and (2) contracts that are in breach.

To determine when there is a drastic decline in lumber prices sufficient to trigger a market-related contract term addition, the Forest Service monitors two producer price indices maintained by the Bureau of Labor Statistics (BLS): #0811 Softwood Lumber and #0812 Hardwood Lumber. These indices are published monthly by the BLS, but the Forest Service only uses the indices from the last month of each calendar quarter (March, June, September, and December) to calculate when MRCTA triggers. Because the BLS indices are not adjusted for inflation, the Forest Service uses a relative index adjusted for inflation that allows comparisons to be made over time on a constant dollar basis. The relative index is calculated each quarter by dividing 100 by the BLS all commodities index for that month and multiplying the result times the monthly indices #0811 and #0812. All references to BLS indices #0811 and #0812 in this notice are to the Forest Service's relative index.

The current decline in the softwood lumber index is the worst on record going back to March 1949. After peaking in the third quarter 2004, softwood lumber index #0811 steadily declined so that by the end of the second quarter (June) 2008, it had decreased by 47 percent. Beginning with the third quarter of 2005 and continuing through the second quarter of 2008, there were 12 consecutive calendar quarters where the declines were large enough to trigger MRCTA. The only other comparable market decline took place during the early 1980's, but the current decline in the index value is worse as can be seen in the table below.[3]

SOFTWOOD LUMBER INDEX

| Decline period[4] | Number of months | High index | Low index | Point drop | % Drop | Trigger quarters |
|---|---|---|---|---|---|---|
| 9/78—9/82 | 48 | 155.8 | 99.8 | 56.0 | 35.9 | [3] 12 |
| 9/04—6/08 | 45 | 156.5 | 83.8 | 72.7 | 46.4 | 12 |

After peaking in the second quarter 2003, the hardwood lumber index steadily declined through the second quarter 2008. During this 42-month period, the index dropped 46.3 percent and triggered MRCTA for three consecutive quarters (September 2005, December 2005 and March 2006), followed by seven quarters that did not trigger. The hardwood lumber index has triggered again in the first and second quarters of 2008. The table below compares the current decline to that in the early 1980s.

HARDWOOD LUMBER INDEX

| Decline period[5] | Number of months | High index | Low index | Point drop | % drop | Trigger quarters |
|---|---|---|---|---|---|---|
| 9/78–3/82 | 42 | 131.7 | 99.6 | 32.1 | 24.3 | [3] 7 |
| 12/03–6/08 | 54 | 138.8 | 92.5 | 46.3 | 33.3 | 5 |

During the decline in the early 1980s, purchasers faced low demand, decreased product prices and severe competition from Canadian lumber, which resulted in many purchasers being unable to operate their timber sale contracts. As a result, a large number of purchasers were in danger of defaulting on their contracts and possibly being forced into bankruptcy. Such an outcome could have had a devastating effect on the economic health of the timber industry, as well as communities surrounding National Forests. Accordingly, in 1980, 1981, and 1982, the Forest Service determined that the substantial overriding public interest justified granting extensions to certain timber sale contracts.[6]

However, the adverse market conditions continued beyond 1982. In July 1983, the President authorized the Secretary of Agriculture, upon a finding of substantial overriding public interest, to grant additional extensions to certain timber sale contracts without interest for a maximum of 5 years beyond their present termination dates.[7] On August 18, 1983, the Chief of the Forest Service made such a finding, and the Forest Service published a notice of interim policy establishing the multi-sale extension program.[8] Under this program, total sale life could extend beyond 10 years.[9] The Forest Service published a final policy on December 7,

[3] The number of consecutive qualifying quarters if MRCTA had been in effect at that time.

[4] The decline period begins with the month the index peaked and ends respectively (1) when the 1980s index bottomed out and (2) June 2008, which is the last quarter with data available for the current decline.

[5] The decline period begins with the month the index peaked and ends respectively (1) when the 1980s index bottomed out and (2) June 2008, which is the last quarter with data available for the current decline.

[6] *See* Extension of Certain Timber Sale Contracts, 48 FR 38,862, 38,863 (Aug. 26, 1983) (describing the SOPI determinations made in the early 1980s).

[7] Extension of Certain Timber Sale Contracts, 48 FR 54,812 (Dec. 7, 1983).

[8] Extension of Certain Timber Sale Contracts, 48 FR 38,862 (Aug. 26, 1983).

[9] *Id.*

1983.[10] Current market conditions justify a similar use of discretion.

**Substantial Overriding Public Interest Determination**

The Under Secretary of Agriculture for Natural Resources and Environment has concluded that a viable timber industry infrastructure results in the better utilization of the various forest resources. Accordingly, the Under Secretary has determined that helping to maintain numerous economically viable timber sale purchasers is in the substantial overriding public interest.

The public benefits when defaulted timber sale contracts, mill closures, and bankruptcies can be avoided by granting additional contract time to purchasers. For example, government resources that might otherwise be spent recovering losses can be focused elsewhere. Further, a large pool of timber sale purchasers allows the Forest Service to accomplish its land management objectives in a more cost-effective manner by increasing competition for National Forest System timber sales, which can result in higher contract prices. In addition, a large number of timber purchasers can provide a more continuous supply of timber to the public in accordance with the Organic Administration Act. The timber industry also helps to maintain the stability of dependent communities.

Further, the timber industry is a valuable partner in the fight against catastrophic fires, especially those in urban interface areas found throughout the western United States. In December 2003, President Bush signed the Healthy Forests Restoration Act (HFRA), which contains a variety of provisions that speed up hazardous-fuel reduction and forest-restoration projects on specific types of federal land at risk for wildland fires and/or insect and disease epidemics.[11] The Act also encourages biomass removal from public and private lands.[12] Byproducts removed during hazardous fuels reduction and landscape restoration activities are often utilized in certain forest products (e.g., timber, engineered lumber, paper, pulp and furniture) and bio-energy and bio-based products (e.g., plastics, ethanol, and diesel). The value of these products helps offset the Forest Service's hazardous fuels removal costs, making treatment of substantially more acreage possible.

Maintaining a viable industry infrastructure capable of processing material removed during HFRA projects is essential; it allows fuels reduction projects to be accomplished with timber sale contracts that return money to the Treasury. The loss of a viable industry in many parts of the country, including the Southwest and the Intermountain West, has limited the opportunities to harvest insect and fire damaged trees. Without a viable infrastructure, the Forest Service would have to pay a service contractor to perform the work. However, when trees are harvested for products, those products provide a valuable commodity to the American public and reduce the government's cost of removing or disposing material that might otherwise have to be burned, chipped, or masticated. In some market areas where little industry infrastructure remains, the loss of a single mill can significantly increase the government's costs of fuels reductions projects. Further, in many places, particularly in the western states, the industry infrastructure is already too small to respond to urgent needs; additional mill closures will aggravate this situation.

An example of the problems associated with limited industry resources is Colorado, where a mountain pine beetle epidemic is impacting over 1.5 million acres. Remaining industry in Colorado is too small to keep up with the urgent need to reduce the fire danger posed by this epidemic by harvesting dead and dying trees around communities and within municipal watersheds. In a June 4, 2008 letter to the Chief of the Forest Service, Colorado Senator Wayne Allard stated the following: ''Providing relief on the ten-year deadline for green sales has become a pivotal issue this year. Under existing policy, operators will be forced to log green sales that are reaching their termination dates, rather than treating much more urgent areas. More important, forcing them to do so during the worst market they have ever experienced could hasten the loss of our last remaining infrastructure—without which the Forest Service would be incapable of performing its mission.''

Considering the extraordinary market conditions currently facing the forest products industry, and recognizing the need to maintain a viable forest products industry, the Forest Service has implemented a variety of relief options over the past few years. For example, in 2006 and 2007, the Forest Service issued SOPI determinations intended to help timber purchasers cope with steadily declining timber markets.[13] However, the 2006 and 2007 SOPIs, like those issued from 1980–1982, did not provide adequate relief.

Accordingly, in May 2008, Congress passed section 8401 of the Food, Conservation, and Energy Act of 2008 (Farm Bill) to provide additional relief.[14] Then, as the result of an error in the Farm Bill that did not affect Section 8401, the May 2008 Farm Bill was repealed. However, on June 18, 2008, Congress reenacted the Farm Bill, which included an identical section 8401.[15] In part, section 8401 recognized that, due to the severity of the current market decline, many contracts had already received the maximum MRCTA time allowed under 36 CFR 223.52(c)(3): ''No more than twice the original contract length or 3 years, whichever is less, shall be added to a contract's term by market-related contract term addition.'' Therefore, Congress enacted section 8401(c), which provides as follows:

> (c) EXTENSION OF MARKET-RELATED CONTRACT TERM ADDITION TIME LIMIT FOR CERTAIN CONTRACTS.—Notwithstanding any other provision of law, upon the written request of a timber purchaser, the Secretary may, at the sole discretion of the Secretary, modify a timber sale contract (including a qualifying contract) awarded to the purchaser before January 1, 2007, to adjust the term of the contract in accordance with the market-related contract term addition provision in the contract and section 223.52 of title 36, Code of Federal Regulations, as in effect on the date of the modification, except that the Secretary may add no more than 4 years to the original contract length.

Section 8401(c) changed 36 CFR 223.52(c)(3) by giving the Secretary of Agriculture discretion to award certain contracts with up to four years of MRCTA to the original contract term. However, section 8401 did not change § 223.52(c)(4)'s requirement that total sale length not exceed 10 years.

Nationally, there are up to 46 contracts that are prevented from receiving the up to 4 years of MRCTA authorized by the Farm Bill because of the 10-year limit on total sale length. Nine of those contracts are scheduled to

[10] Extension of Certain Timber Sale Contracts, 48 FR 54,812 (Dec. 7, 1983). After the housing market decline of the 1980s, the Forest Service promulgated 36 CFR 223.52, which provides for market-related contract term additions in response to adverse timber market conditions. *See* Sale and Disposal of National Forest Timber; Market-related Contract Term Adjustments, 55 Fed. Reg. 50,643 (Dec. 7, 1990).

[11] 16 U.S.C. 6501 *et seq.*

[12] *See e.g.* 16 U.S.C. 6531.

[13] *See* Extension of Certain Timber Sale Contracts; Finding of Substantial Overriding Public Interest, 71 FR 66,160 (Nov. 13, 2006); Extension of Certain Timber Sale Contracts; Finding of Substantial Overriding Public Interest, 72 FR 64,991 (Nov. 19, 2007).

[14] Pub. L. No. 110–234, 122 Stat. 93 (May 22, 2008). Section 8401, depending on the circumstances, allows for the following types of contract modifications: (1) Rate redetermination; (2) contract cancellation; (3) index substitution; and (4) MRCTA extension.

[15] Pub. L. No. 110–246, 122 Stat. 1651 (June 18, 2008).

terminate before the end of 2008 and 18 have termination dates in 2009. Six of the 46 contracts have current termination dates of December 31, 2013 or later. Contracts with termination dates after December 31, 2013 are not eligible for relief under this SOPI.[16]

Therefore, up to 40 timber sales could benefit from using MRCTA to extend contract length beyond 10 years. While this number is not large, the Secretary of Agriculture agrees with Senator Allard's observation that forcing those sales to be operated in the current market situation could hasten the loss of infrastructure needed by the Forest Service to perform its mission. Extending these sales and other sales allows purchasers to delay harvest of green timber while harvesting damaged timber.

Purchasers of the 40 sales potentially eligible for relief under this SOPI face the same market conditions as purchasers eligible for the additional MRCTA time authorized by the Farm Bill. Further, some of these green timber sales have been delayed as a result of the Forest Service requesting that the purchasers harvest salvage timber instead. Without this SOPI, many of these purchasers may be forced to harvest sales that are uneconomical or may face default if their contracts can't be extended. An indication of the economic problems facing existing green sales is that over 360 applications have been made for a rate redetermination under the Farm Bill. These applications show how much the market has changed over the past few years and that without some economic or time-frame relief, older green timber sales can not be harvested economically.

The 2006 and 2007 SOPI determinations and section 8401 of the Farm Bill provided relief options for most National Forest System timber sale contracts suffering under the ongoing drastic decline in forest product markets. The principal exceptions are the contracts ineligible for additional MRCTA time because of the ten-year limit on total contract length.

Therefore, pursuant to 16 U.S.C. 472a(c) of NFMA, and the authority delegated to me at 7 CFR 2.20, I, Mark E. Rey, Under Secretary of Agriculture for Natural Resources and Environment, have determined that the substantial overriding public interest justifies the use of MRCTA to extend beyond 10 years certain existing green timber sale contracts awarded prior to January 1, 2007, that are tied to Softwood Lumber index #0811 and the Hardwood Lumber index #0812.

MRCTA relief granted pursuant to this SOPI must be made in accordance with 36 CFR 223.52, subject to the following exceptions:

(a) Notwithstanding 36 CFR 223.52(c)(3), up to 4 years may be added to a contract's length by market-related contract term addition;

(b) Notwithstanding 36 CFR 223.52(c)(4), the revised contract term may exceed 10 years; and

(c) No contract's termination date shall be set past December 31, 2013. Periodic payments shall be adjusted pursuant to 36 CFR 223.52(d).

The following types of contracts are not eligible for relief under this SOPI: (1) Contracts the Forest Service determines are in urgent need of harvest for reasons including, but not limited to, deteriorating timber conditions or public safety, and (2) contracts that are in breach.

To be considered for additional MRCTA time under this SOPI, eligible purchasers must make a written request to the Contracting Officer. The timber purchaser must also agree to release the United States from all liability resulting from (1) any relief provided by this SOPI, and (2) a decision by the Forest Service not to provide relief under this SOPI.

Dated: September 10, 2008.

**Mark Rey,**

*Under Secretary, NRE.*

[FR Doc. E8–21613 Filed 9–16–08; 8:45 am]

BILLING CODE 3410–11–P

[16] At this time, the softwood lumber is expected to recover sufficiently by December 31, 2013.

## DEPARTMENT OF AGRICULTURE

### Forest Service

### Forest Certification and Its Implications for America's National Forests

**AGENCY:** Forest Service, USDA.

**ACTION:** Notice; request for comment.

**SUMMARY:** The USDA, Forest Service is seeking comments on forest certification and its implications for America's national forests. This **Federal Register** notice is to serve as a formal public solicitation of views on the question of National Forest System certification and its implications, if national forest lands were to become certified under one or both of the two major certification systems being used in the United States. The U.S. Forest Service, which manages 193 million acres, or approximately eight percent of the nation's land, believes that it is important to better understand the implications of third-party certification of National Forest System (NFS) lands and, in 2005, began exploring independent, third party certification as a potential option. To this end, the Forest Service initiated the National Forest Certification Study, which resulted in the report, ''National Forest Certification Study: An Evaluation of the Application of Forest Stewardship Council (FSC) and Sustainable Forestry Initiative (SFI) Standards on Five National Forests.'' This report documents the study in which third-party auditors evaluated current forest management practices on five national forest units using the existing certification standards of two certification programs, Sustainable Forestry Initiative (SFI) and Forest Stewardship Council (FSC).

Recognizing that the Forest Service has not decided whether it will seek certification, public outreach and discussion is requested to obtain public and stakeholder views on the National Forest Certification Study and its associated report, as well as the potential implications of NFS certification in general before determining how to proceed.

In addition to comments on the National Forest Certification Study, the Forest Service is particularly interested in public views on the following questions:

1. What are your general views on the implications of independent, third party certification of NFS lands?
2. Would certification improve the management of national forests?
3. Could certification make it more difficult to achieve national forest management goals?
4. What questions would certification be able to answer, and what needs would it be able to meet, on national forest lands?
5. Are there key questions or needs that certification would be unable or poorly suited to address?
6. Would independent, third party certification be an appropriate or effective tool, given the unique role of national forests? Or, because of that unique role, would certification be particularly inappropriate or ineffective?

Detailed information about the NFS Certification Study is available on the following Web site: *http://www.fs.fed.us/projects/forestcertification/index.shtml.*

**DATES:** Comments must be received, in writing, on or before November 17, 2008. Comments received after that date will be considered to the extent praticable.

**ADDRESSES:** Comments concerning this notice should be addressed to Doug

MacCleery, USDA Forest Service (FM), 201 14th St. SW., Mailstop: 1103, Washington, DC 20024. Comments may also be sent via e-mail to *dmaccleery@fs.fed.us,* or via facsimile to (202) 205–1045.

All comments, including names and addresses when provided, are placed in the record and are available for public inspection and copying. The public may inspect comments received at the above address. Visitors are encouraged to call ahead to (202) 205–1745 to facilitate entry to the building.

**FOR FURTHER INFORMATION CONTACT:** Doug MacCleery, Forest Management, (202) 205–1745, *dmaccleery@fs.fed.us.* Additional information concerning Forest Service certification may be obtained on the Internet at *http://www.fs.fed.us/projects/forestcertification/index.shtml.*

Individuals who use telecommunication devices for the deaf (TDD) may call the Federal Information Relay Service (FIRS) at 1–800–877–8339 between 8 a.m. and 8 p.m., Eastern Standard Time, Monday through Friday.

**SUPPLEMENTARY INFORMATION:** Independent, third-party certification is one of the most significant developments in the field of forest management in the last two decades. Its use has expanded dramatically as the public and consumers have increased their interest in practical ways to ensure that good management practices are being applied to forests both domestically and around the world. Certified area has expanded to an estimated 7% of forests globally. In the U.S., the area of forests certified by the Sustainable Forestry Initiative (SFI) and the Forest Stewardship Council (FSC) has increased from virtually none in 1998 to over 60 million acres today. About 14 million acres of state-owned lands have been certified, in most cases to both FSC and SFI standards.

In the United States, certification was first applied to private lands. Due to the perceived benefits of the process, public lands are now becoming involved as well. Eight state forest systems in the U.S. are now certified. Some State forestry officials believe that certification has served to improve the quality of forestry management and to affirm their commitment to accepted standards of good forest management. Many believe that the certification process has been more about public accountability than providing certified wood to the marketplace.

Certifying National Forest System lands has been debated for several years. It is a sensitive and complex issue, perhaps more so for the NFS than any other type of ownership in the U.S. National Forest System planning is exceedingly complex and management practices and objectives are closely scrutinized by both the public and U.S. Courts. The Forest Service is currently assessing the value and implications of certification for the NFS.

## National Forest Certification Study

In 2005, in order to evaluate the implications of national forest certification, the U.S. Forest Service initiated a formal study of the issue. Independent third-party certification indicates certification to standards derived by a group external to the organization being audited. Under this study, independent third-party auditors evaluated current forest management practices on five national forest units using the existing certification standards of two certification programs, Sustainable Forestry Initiative (SFI) and Forest Stewardship Council (FSC). FSC certification standards and related information can be viewed at: *http://www.fscus.org.* The SFI Web site is at: *http://www.sfiprogram.org.*

On October 22, 2007, ''National Forest Certification Study: An Evaluation of the Application of Forest Stewardship Council (FSC) and Sustainable Forestry Initiative (SFI) Standards on Five National Forests'' was released. This report, produced by the Pinchot Institute for Conservation (PIC), summarizes and discusses the five third-party evaluations and captures lessons learned through a review of participant experiences.

The study was designed to:

1. Evaluate the potential implications of third-party certification of national forests and grasslands,

2. Provide a better understanding of how national forest management practices align with FSC and SFI standards, and

3. Study the lessons learned as a basis for determining what policy and management direction may be needed in the event forest certification were pursued in the future.

Actual certification by FSC or SFI was outside the scope of these evaluations and was not a possible outcome on any of the study units. Nor did the FSC or SFI participate directly in the study. However, this study provided the Forest Service with a valuable opportunity to examine the consistency of current national forest resource management activities with the requirements of the two major forest certification programs now operating in the U.S. This was the first time national forest management had been evaluated with reference to the standards of such certification programs.

## Participating Units

The National Forest System (NFS) management units evaluated were the:

- Allegheny National Forest (ANF) in Pennsylvania.
- Lakeview Federal Stewardship Unit (LFSU) on the Fremont-Winema National Forest in Oregon.
- Chequamegon-Nicolet National Forest (CNNF) in Wisconsin.
- Mt. Hood National Forest (MHNF) in Oregon.
- National Forests in Florida (NFF).

## Role of the Pinchot Institute for Conservation

The Pinchot Institute for Conservation (PIC), which carried out this study, is an independent nonprofit research and education organization dedicated to investigating new approaches to forest conservation and has carried out certification tests in a variety of settings. The Institute investigated the implications of certification on state-owned, private, tribal, and university forest lands. For this project the Institute:

- Worked to secure funding for the certification evaluations.
- Contracted with accredited, third-party auditors.
- Provided coordination between the Forest Service and auditors.
- Reviewed and evaluated the auditors' reports.
- Interviewed those involved in the certification evaluations to assess their views as to potential benefits and detriments/costs of the process.
- Prepared the study findings, results, and a lessons learned report.

## Study Scope and Conduct

The national forest certification evaluations were designed to closely approximate the process that a national forest would undergo were it actually seeking certification. The audit firms were required to be fully accredited to carry out FSC and SFI certification audits and to use the same approach they would for an actual certification assessment. The study unit national forests addressed FSC and SFI requirements as set forth in standards applicable to private, State-owned and Department of Defense and Department of Energy (DOD–DOE) lands in the U.S.

All certification evaluations were the functional equivalents of major, broad-based management reviews of all aspects of national forest management. The FSC and SFI evaluation reports of the five national forests read like other certification assessment reports. They

include a summary of the management setting, stakeholder feedback, findings of performance gaps or non-conformances (major and minor), and issuance of Corrective Action Requests.

**Performance Against FSC and SFI Standards Used in the Study**

Auditors found many situations where practices on the units evaluated demonstrated good overall conformance with most of the FSC and SFI standards currently being applied to private and State-owned and DOD–DOE lands in the U.S.

Examples included:

- Forest planning and operations.
- Inpact assessments.
- Stakeholder consultation.
- Coordination with First Nations.
- Extent of reserves.
- Protection of threatened and endangered species.
- Control of invasives and exotics.

The auditors did cite a number of areas where the Forest Service is not meeting the FSC or SFI certification standards used in the study. Performance gaps on one or more study units included:

- Forest health issues arising from the backlog of management activities.
- A backlog of road maintenance and decommissioning.
- Inadequate monitoring of non-timber forest products.
- Issues with old-growth protection and management on two study national forests.
- Inadequate attention to logger safety.
- Operation under outdated management plans.
- Inadequate attention to off highway management issues and their enviornmental effects.
- Difficulty in dealing with oil and gas leases not controlled by the Federal Government on one study unit (split estate).

Some performance gaps are minor and do not preclude certification if they can be remedied within a given time period after a certificate is issued. Other gaps are major and would preclude FSC or SFI certification until mechanisms are put into place to address them. Auditors also issue observations or note opportunities for improvement that suggest things that may improve compliance with standards.

**Feedback From Forest Service Staff Involved in the Study**

The geographic representation of the study on unit national forests provided an opportunity to test certification in different NFS settings. Each participating forest faces similar agencywide challenges (limited resources and overextended staff, appeals and litigation) and yet is faced with its own ecological and socioeconomic issues.

Most of the NFS study coordinators (the Forest Service point person for the study on each forest) felt that the certification programs impose requirements that are relevant to determining whether a forest is meeting its management objectives and improving their management practices over time. Forest staff indicated that certification can be a valuable tool if carried out in an effective manner that does not impose an additional, unsupported burden on staff and resources.

Staff found the evaluations to be a broad-based and comprehensive review—often more so than the Forest Service's own targeted, internal audits, of the many integrated management activities occurring on the forest. To this end, they were impressed with the wide range of issues addressed by the evaluations.

Coordinators also reported that the FSC and SFI evaluations provided positive, independent reinforcement of their management activities while identifying those areas where improvements are needed. In many cases, these identified improvements were not unfamiliar to forest staff but would not be addressed unless additional funding and/or staff resources were available. Participating staff also recognized the value of third parties communicating publicly on the successes and difficulties of national forest management, especially difficulties arising from factors they feel are ''beyond their control.'' In this context, NFS study coordinators identified Corrective Action Requests that they felt would be difficult or impossible to fix, and would likely need to be addressed by the Forest Service Washington Office.

**Some Lessons Learned in the Study**

The following is a summary of some of the lessons learned in the study.

*Lessons Pertinent to Individual National Forests*

- Management issues, challenges, and certification assessment results will vary from unit to unit.
- The certification assessments were useful feedback mechanisms for national forest personnel regarding their management of the forest, and by providing a more comprehensive and integrative review than normal internal audits, they complemented existing management systems. Normally, a certification assessment would also help determine whether a forest management unit is meeting its own management objectives, and would emphasize improving management practices over time.
- The assessments provided opportunities beyond existing legal and administrative requirements for interest groups and stakeholders to provide input regarding national forest management.
- Outdated land and resource management plans may prevent some forests from meeting the requirements set forth in certification standards, which emphasizes a potentially broader need for updating national forest management systems.
- The lack in some cases of integrated landscape planning involving adjacent lands and landowners raised the issue of the unique role of national forests within the broader landscape, as well as nationwide, and how certification would take account of this role.

*Lessons Pertinent to the National Forest System*

- Backlogs in road maintenance, delays in silvicultural treatments, and other problems in the implementation of approved forest plans were often cited as indicators of larger budgeting and staffing issues outside the control of individual national forests (in the hands of Congress or the Administration).
- National forest staff time required to participate in certification assessment and reporting procedures varied considerably from unit to unit but raised issues of 'unsupported' budgetary demands (not specifically covered by existing funding levels).
- The fact that ownership and control of sub-surface mineral rights may lie in the hands of external parties raised broader questions about how the Forest Service would deal with such issues if they impact forest management and the ability of a forest unit to meet certification standards.
- Inconsistencies between certification standards and existing National Forest System management, planning and policy commitments (Northwest Forest Plan, the definition of Native American organizations as sovereign entities, chemical use), raise broader questions about the relationship between private certification organizations and federal land management systems.
- Requirements in the SFI and FSC standards that the Forest Service make formal 'commitments' to the certification programs raise questions about how the agency could do this organizationally and legally.

**Next Steps**

Recognizing that the Forest Service has not decided whether it will seek certification, the following are relevant considerations:

The FSC Federal Lands Policy establishes three criteria to be met before any new Federal land system such as the NFS could seek certification. In summary, the criteria are a *willing landowner* (the Forest Service), a determination that *public consensus* exists regarding management of the NFS, and the development of a *set of standards* specific to each category of Federal forestland (Forest Service, Bureau of Land Management, etc.). Because the Forest Service has not determined whether it will seek certification, FSC has not yet determined whether, how or when they will address these criteria for the Forest Service.

SFI has indicated that it would welcome NFS participation in SFI certification. A landowner seeking SFI certification must formally commit to reporting and management measures specific to the SFI Program. How and whether the Forest Service could make these commitments would also need to be determined.

A public outreach effort is now underway to obtain public and stakeholder views on the outcomes of the National Forest Certification Study and the potential implications of NFS certification in general. Once this effort is completed, the Forest Service will evaluate its options and determine how to proceed.

Dated: September 10, 2008.

**Charles L. Myers,**

*Associate Deputy Chief, NFS.*

[FR Doc. E8–21611 Filed 9–16–08; 8:45 am]

BILLING CODE 3410–11–P

## DEPARTMENT OF AGRICULTURE

### Forest Service

**RIN 0596–AC50**

### Final Directives for Forest Service Outfitting and Guiding Special Use Permits and Insurance Requirements for Forest Service Special Use Permits

**AGENCY:** Forest Service, USDA.

**ACTION:** Notice of final directives; response to public comment.

**SUMMARY:** The Forest Service is revising directives governing special use permits for outfitting and guiding conducted on National Forest System lands by simplifying the application and administrative process; establishing a flat land use fee for temporary use permits; developing a process for allocation of use on a first-come, first-served or lottery basis for temporary use permits to facilitate greater participation in outfitting and guiding by youth, educational, and religious groups; offering the same terms and conditions to educational and institutional permit holders as offered to other types of permit holders when they operate as a business; and clarifying policy for priority use permits governing performance, inspections, and allocation of use. In addition, the Forest Service is revising the directives governing insurance requirements for Forest Service special use permits. Public comment was considered in the development of the final directives, and a response to comments is included in this notice.

**DATES:** Effective Date: These directives are effective October 17, 2008.

**ADDRESSES:** The record for these final directives is available for inspection at the office of the Director, Recreation, Heritage, and Volunteer Resources Staff, USDA, Forest Service, 4th Floor Central, Sidney R. Yates Federal Building, 1400 Independence Avenue, SW., Washington, DC, during regular business hours (8:30 a.m. to 4 p.m.), Monday through Friday, except holidays. Those wishing to inspect these documents are encouraged to call ahead at (202) 205–1426 to facilitate access to the building. Copies of documents in the record may be requested under the Freedom of Information Act.

**FOR FURTHER INFORMATION CONTACT:** Carolyn Holbrook, (202) 205–1426, Recreation, Heritage, and Volunteer Resources Staff.

**SUPPLEMENTARY INFORMATION:**

**Table of Contents**

1. Background and Need for the Final Directives
2. Public Comments on the Proposed Directives and Agency Responses
   - Overview of Comments
   - Response to General Comments
   - Response to Comments on Specific Sections of the Directives
   FSH 2709.11, section 41.53
   FSH 2709.11, section 37.21b
   FSM 2713.1
   - Response to Comments on Regulatory Certifications in the Proposed Directives
3. Summary of Revisions to the Final Directives
4. Regulatory Certifications for the Final Directives
   - Environmental Impact
   - Regulatory Impact
   - No Taking Implications
   - Civil Justice Reform
   - Federalism and Consultation and Coordination with Indian Tribal Governments
   - Energy Effects
   - Unfunded Mandates
   - Controlling Paperwork Burdens on the Public
5. Access to the Final Directives

**1. Background and Need for the Final Directives**

Outfitting and guiding conducted on National Forest System lands have become one of the chief means for the recreating public to experience the outdoors. The Forest Service administers approximately 5,000 outfitting and guiding permits, authorizing activities ranging from guided hunting and fishing trips to jeep tours and outdoor leadership programs. The agency anticipates that outfitting and guiding will increase in importance as the public's desire for use of Federal lands increases and as the agency encourages use by increasingly diverse and urban populations, many of whom may lack the equipment and skills necessary in the outdoors. Therefore, agency policy needs to reflect the public's demand for services while incorporating standard business practices and sustaining the natural environment in which these activities occur.

Except for the revision to term length for priority use permits (April 14, 2005, 70 FR 19727), outfitting and guiding directives have remained relatively unchanged since they were finalized in 1995. Since that time, proposed legislation and field implementation of current policy have shown the need for updating the directives. The changes adopted will be incorporated as appropriate in the standard special use permit for outfitting and guiding, form FS–2700–4i, and other applicable forms.

In addition, the Forest Service is updating direction on the minimum amount of insurance coverage required for special use permits generally, including outfitting and guiding permits.

**2. Public Comments on the Proposed Directives and Agency Responses**

*Overview of Comments*

The proposed directives were published in the **Federal Register** for public notice and comment on October 19, 2007 (72 FR 59246). The Forest Service received several requests for extension of the comment period and published two notices, each of which extended the comment period (72 FR 71113; December 14, 2007, and 73 FR 8264; February 13, 2008). The comment period closed on March 20, 2008.

The Forest Service received approximately 480 comments on the proposed directives. Respondents fell

into the following categories: Unguided recreation—249; camps and youth organizations—20; universities—11; nonprofit outfitters and guides—4; state agencies and officials—5; state outfitting and guiding associations—13; national outfitting and guiding associations—5; and commercial outfitters and guides—173.

*Response to General Comments*

*Comments.* One respondent opposed the proposed changes in their entirety and stated that the directives should be withdrawn.

A number of respondents opposed the proposed directives because they perceived them as granting exclusive access to National Forest System (NFS) lands to commercial outfitters and guides at the expense of the unguided public and without the opportunity for public input.

Another respondent believed that the proposed directives were seriously flawed because the Forest Service did not collaborate with the outfitting and guiding industry in their development, which rendered them unworkable. Another respondent recommended that the Forest Service consider meeting with key interested parties to ensure that the final directives provide a balance for the needs of parties seeking permits.

Another respondent recommended that the proposed directives be revised and republished for public notice and comment. One respondent supported the inclusion of resource protection in the overall objectives of the proposed directives.

One respondent expressed support for most of the proposed directives and viewed them as enhancing the relationship between the Forest Service and outfitters and guides.

*Response.* The Forest Service disagrees that these directives should be withdrawn in their entirety. The outfitting and guiding program is not new, and the Forest Service has many years of experience managing these services. The changes that will result from implementing these directives can be characterized as enhancement of the existing program. The directives will not significantly change the types or quantities of public services that are being provided. The directives will improve access to recreational experiences to some underserved groups and will provide a more secure business opportunity for those who intend to conduct ongoing operations. The Forest Service believes that these directives address resource protection more effectively than current policy, but does not believe that inclusion of resource protection in the objectives section of the directives is appropriate as it is not their principal focus.

Forest Service special use permits do not grant exclusive use (36 CFR 251.55(b)).

The Forest Service followed appropriate procedures for public involvement under the Administrative Procedure Act in developing and issuing these final directives.

Many respondents recommended changes to specific sections of the proposed directives. The agency is making some changes to the proposed directives in response to these comments. Therefore, additional public notice and comment are unnecessary. Some of the comments were outside the scope of the proposed directives.

*Response to Comments on Specific Sections of the Directives*

FSH 2709.11, section 41.53

41.53a—Authorities

*Comments.* Several respondents believed that the Federal Lands Recreation Enhancement Act (REA) should not be used as the authority for issuing outfitting and guiding permits because doing so would provide an incentive to increase commercial use of Federal lands.

*Response.* The agency believes that REA is an appropriate authority for authorizing outfitting and guiding on Federal lands. REA authorizes the Forest Service to issue special recreation permits for specialized recreation uses of Federal recreational lands and waters, such as group activities, recreation events, and motorized recreational vehicle use (16 U.S.C. 6802(h)). Outfitting and guiding is a specialized recreation use. This authority has been used since December 2004 by both the Forest Service and Bureau of Land Management (BLM) for outfitting and guiding permits. The Forest Service does not see any incentive in REA's special recreation permit authority for increasing commercial use of Federal lands.

41.53b—Objectives

*Comments.* Several respondents observed that the Forest Service should recognize the important role educational providers play in furthering the agency's management goals. These respondents noted that nearly all university outdoor programs attempt to provide educational and developmental experiences for students that differ from the intent and purpose of commercial outfitting and guiding. These respondents recommended adding a new objective to encourage outfitting and guiding services that facilitate greater participation by youth, educational, and religious groups through improved access to temporary use permits and assignment of priority use to institutional permit holders. Another respondent believed that the Forest Service should be more proactive in assisting universities in finding wilderness areas that can support more outfitters and guides, for example, by providing a list of national forests that can issue more outfitting and guiding permits. This same respondent stated that Forest Service employees appear to be reluctant to work with universities that want to conduct outfitting and guiding.

*Response.* The Forest Service agrees that it is important to recognize the contribution made by educational outfitters and guides. Accordingly, in the final directives, the Forest Service has added an objective in section 41.53b, paragraph 2, that states: ''Facilitate greater participation in the outfitting and guiding program by organizations and businesses that work with youth and educational groups.'' The agency does not believe that it would be appropriate for the directives to address assistance to universities in finding suitable wilderness areas for outfitting and guiding. Interested parties should work with administrative units and regions to determine available opportunities.

41.53c—Policy

*Comments.* One respondent stated that a goal of the directives should be to broaden the spectrum of services and service providers able to meet the demand for guided services. Several respondents believed that administrative units should take more initiative in evaluating the demand for new recreation and guiding opportunities.

*Response.* While the Forest Service agrees that broadening the spectrum of services and providers may be appropriate, the agency believes that it is best to make this determination case by case through a needs assessment, rather than to state that it is always appropriate. Additionally, it is not possible to authorize new activities without reviewing proposals and applications and conducting environmental analysis.

*Comments.* One respondent supported proposed section 41.53c, paragraph 2, which addresses authorization of permitted access routes. Another respondent questioned what was meant by this term.

*Response.* The Forest Service added the following definition in section

41.53d for permitted access route: ''Any road or trail that a holder is authorized to use under an outfitting and guiding permit or operating plan for purposes of pedestrian, stock, or vehicular access.''

*Comment.* One respondent suggested revising section 41.53c, paragraph 3, to be consistent with the Wilderness Act. This respondent suggested prohibiting any development or permanent improvements in wilderness areas and stated that the proposed wording was insufficient to meet the intent of the Wilderness Act by allowing improvements in wilderness areas. The respondent suggested that the wording in the current directives at section 41.53b, paragraph 3, be retained and that no development, improvements, installations, or caches be allowed in wilderness areas for the purpose of convenience to the holder or the holder's clients in order to preserve the areas' wilderness character.

*Response.* The Forest Service agrees with the respondent that the current language in section 41.53b, paragraph 3, is more consistent with the Wilderness Act and more accurately reflects the agency's intent with regard to improvements in wilderness areas. Therefore, the agency has revised proposed section 41.53b, paragraph 3, to restore the wording in the current directives.

*Comment.* One respondent suggested adding ''other types of permit holders'' to proposed section 41.53c, paragraph 4, and using this provision to involve outfitters and guides in developing thresholds for allocation of priority use.

*Response.* The Forest Service has added the phrase ''other interested parties'' to the list of individuals and entities in section 41.53c, paragraph 4, with whom the Forest Service will work to encourage outfitters' and guides' compliance with applicable law.

*Comment.* One respondent supported the content of proposed section 41.53c, paragraph 6, regarding not issuing permits to applicants with no tangible assets.

*Response.* The Forest Service agrees that outfitting and guiding permits should not be issued to applicants with no tangible assets.

41.53d—Definitions

*Comments—Allocation of Use.* One respondent suggested that the agency modify the definition of allocation of use to add allocation-free systems where the unguided public as well as outfitters and guides would compete equally for limited use from a common pool. Several respondents recommended adding a definition for ''common pool'' or ''allocation-free use'' to clarify that a common pool is open to the unguided public.

*Response.* The management of use by the unguided public is beyond the scope of these directives. See the response to comments on proposed section 41.53e for further detail.

*Comments—Commercial Use or Activity.* One respondent agreed that intent to make a profit is irrelevant to the determination of whether a use or activity is commercial. However, this respondent believed that further clarification is necessary regarding the meaning of ''entry or participation fee.'' Another respondent recommended revisiting the definition of commercial use or activity and stated that tuition for educational guiding should not be viewed as the sale of a product. Another respondent suggested adopting a more detailed definition of commercial use or activity, based on the BLM's definition in its policy.

*Response.* The Forest Service does not believe that modification of the definition for commercial use or activity is warranted. The definition for this term in the Forest Service's directives is the same as the definition in the agency's regulations at 36 CFR 251.51 and is consistent with BLM's definition. In addition, the definition for commercial use or activity was not proposed for revision and is therefore beyond the scope of the proposed directives. Finally, current policy at FSH 2709.11, section 37.21k, provides that tuition is excluded from revenue for purposes of calculating land use fees for outfitting and guiding.

*Comments—Concessionaire.* One respondent noted that the term ''concessionaire'' as used in Forest Service Manual (FSM) 2713.1 governing insurance is not included in the definitions for the outfitting and guiding directives. Another respondent wanted clarification of the term ''concessionaire.''

*Response.* A definition for concessionaire has been added to the final directives.

*Comments—Educational Outfitting.* Several respondents suggested defining educational outfitter and guide separately from outfitter and guide, as follows: ''An organization that in conducting outfitting and guiding furthers the public interest and that is either a tax-exempt or governmental entity.'' These respondents believed that since educational outfitters and guides spend most of their time providing educational services, they should be differentiated from other outfitters and guides, who do not typically provide educational services. These respondents also believed that they should not be included in the definition of commercial use or activity.

*Response.* The Forest Service believes that it is not necessary or appropriate to create a new category of use for educational outfitters and guides. The definition of outfitting and guiding in the directives matches the definition of those terms in the agency's regulations at 36 CFR 251.51. Arguably, all outfitters and guides further the public interest, in that without their services, some recreational activities and amenities would be beyond the reach of many members of the public. The agency does not believe that outfitters' and guides' non-profit status determines whether they derive revenue from the services they provide. Under current directives in Forest Service Handbook (FSH) 2709.11, section 37.21k, tuition charged for a program for which students earn credit is excluded from revenue for purposes of calculation of the land use fee for outfitting and guiding. Finally, the definitions for outfitting and guiding were not proposed for revision and are therefore beyond the scope of the proposed directives.

*Comments—Interim Temporary Use.* One respondent recommended adding the following definition for interim temporary use: ''For permits that are subject to conversion to priority use, temporary use may be authorized for up to five, one-year terms with no limits on the amount of use assigned to the permit until the interim temporary use permits can be converted to priority use status. The permits may include a clause that allows the use to roll over for each year if no significant performance, financial, safety, or resource protection issues are found. Use may be adjusted from year to year as may be appropriate for resource conditions. Use pools for temporary use may also be established in accordance with 41.53j (revised).'' Several respondents suggested the following definition: ''Authorization of use for a trial two-year term for a new outfitter with no prior experience prior to issuance of a priority use permit for a full ten-year-term.''

*Response.* The Forest Service agrees that a definition is needed for temporary use permits that may be eligible for conversion to priority use permits, but prefers the term ''transitional priority use,'' which is more descriptive of the future use contemplated. Consequently, the agency has added the following definition in the final directives: ''Transitional Priority Use. Interim redesignation of temporary use as classified under the Forest Service's June 12, 1995, outfitting and guiding policy (60 FR 30830), for holders who

meet all the requirements in section 41.53p.

*Comments—Needs Assessment.* One respondent recommended modifying the definition of needs assessment to include assessment of public demand for commercial services in relation to public demand for unguided use. Additionally, some respondents stated that excess use should be allocated through a common pool open to the unguided public, as well as to commercial outfitters and guides.

*Response.* The Forest Service generally does not allocate noncommercial use. To the extent noncommercial use is allocated (for example, in wilderness areas through restrictions on the number of people at one time in an area), that type of allocation is beyond the scope of these directives. Therefore, the proposed modification of the definition of a needs assessment and the proposed allocation of excess outfitting and guiding use are not appropriate.

*Comment—Nonrecurring Temporary Use and Nonrecurring Temporary Use Pool.* One respondent suggested adding the following definition for nonrecurring temporary use: ''Authorization of a minor, non-recurring outfitting or guiding activity for 1 season or less from non-recurring use pools,'' and the following definition for non-recurring temporary use pool: ''A pool established for non-recurring temporary uses. The amount of use assigned to the pool may be based on the general availability of capacity at a resource but without reducing allocations from any user segment.''

*Response.* The Forest Service believes that the proposed definitions are unnecessary because they would be redundant with the definition of temporary use.

*Comment—Outfitter.* One respondent recommended dropping or clarifying the phrase ''for other gain'' in this definition because it is ambiguous.

*Response.* The agency believes that the phrase ''for other gain'' is clear. ''Other gain'' in this context means any value other than cash, such as barter, received by holders in exchange for services they provide on NFS lands. The Forest Service considers cash and other gain obtained by concessionaires in exchange for their services in determining and auditing their land use fee.

*Comments—Priority Use.* One respondent supported the definition of priority use. Another respondent recommended that the term ''priority use'' be changed to ''commercial use'' and that the permit term for priority use be limited to 5 years.

*Response.* The Forest Service is retaining the term ''priority use'' to describe long-term allocations of use for outfitting and guiding. After many years of use, affected parties are familiar with the term. In addition, the term ''commercial use'' would be ambiguous because all Forest Service outfitting and guiding permit holders are commercial. The term ''priority use'' refers to a subset of those outfitters and guides who have a long-term allocation of use. Outfitting and guiding permit terms are addressed in the response to comments on proposed section 41.53l.

*Comment—Priority Temporary Use.* One respondent wanted to add the following definition for priority temporary use: ''Authorization of a minor outfitting or guiding activity for 1 season or less that may be authorized from priority temporary use pools,'' and the following definition for priority temporary use pool: ''A pool that may be established for access by priority use permittees from redistribution of unutilized use allocations from priority use permittees, consistent with the provisions in 41.53l. Use may also be contributed voluntarily to the pool by priority use permittees.''

*Response.* The Forest Service has added a section entitled, ''Management of Priority Use Pools'' that addresses temporary allocation of use to priority use permit holders. Therefore, the proposed definitions are unnecessary.

*Comments—Quota.* One respondent supported the definition of quota. Another respondent suggested adding ''per year'' as another unit of measure for use allocations.

*Response.* The phrase ''or other unit of measure'' in the definition is broad enough to include ''per year'' if that unit of measure were appropriate. However, allocations per year are unlikely because they generally would not provide sufficient specificity.

*Comment—Renewal.* One respondent supported the definition of renewal.

*Response.* The Forest Service has not proposed changes to and is not changing the definition for renewal.

*Comment—Resource Capacity.* One respondent supported including the definition for resource capacity, since determining resource capacity is critical for protecting national forest resources.

*Response.* The Forest Service agrees that the definition for resource capacity is warranted.

*Comments—Service Day.* One respondent recommended striking the phrase ''multiplied by the number of clients on the trip'' because it confuses the concept of a service day with trip capacity. Another respondent recommended simplifying the definition of a service day, for example, by allocating use for river outfitters and guides in launches, rather than service days.

*Response.* The agency agrees that the proposed definition of service day was confusing and has corrected the last sentence of the definition to read: ''The total number of service days is calculated by multiplying each service day by the number of clients on the trip.'' The directives provide that use may be allocated in service days or quotas. Since launches are a type of quota, use may be allocated in launches, if appropriate.

*Comments—Temporary Use.* One respondent proposed replacing the definition of temporary use with 5 new terms: Non-recurring temporary use, non-recurring temporary use pool, priority temporary use, priority temporary use pool, and interim temporary use. Another respondent believed that the definition for temporary use was inappropriate given the lack of viable means for converting temporary use to priority use.

*Response.* The agency believes that these proposed definitions are unnecessary and that the definitions for temporary use and temporary use pool adequately address the concepts covered by the proposed definitions. The comment regarding conversion of temporary use to priority use is addressed in the response to comments on section 41.53p, Transitional Priority Use.

41.53e—Needs Assessment, Resource Capacity Analysis, and Allocation of Use

*Comments Concerning Scope.* One respondent stated that it was unfortunate that the agency was not including in these provisions members of the recreating public who do not utilize outfitting and guiding services. Many respondents were concerned that the directives would give an advantage to commercial outfitters over members of the unguided public. Others suggested that when competitive interest exists for the same resources or type of use or when significant changes are being considered to current use or demand, a common pool should be established for the distribution of outfitting and guiding permits for all recreational use groups. One respondent proposed that the Forest Service evaluate public demand for unguided recreation before evaluating any need for new or increased commercial outfitting and guiding services. One respondent stated that all users of the national forests should be able to compete equally. Another respondent

proposed a common pool for allocation of permits that would be open equally to unguided recreationists as well as outfitters and guides and issuance of commercial outfitting and guiding permits without an allocation of use.

Several respondents suggested allocating use in service days or quotas for unguided as well as guided use, following a resource capacity analysis. One respondent stated that allocation of use should not be required and should be employed only if necessary for resource protection. Another respondent was concerned that outfitters and guides would bear the brunt of use restrictions because it is more difficult to assess and control use by the general public. One respondent believed that the general public and non-permitted groups should be subject to the same use restrictions as permitted users, who are enabling recreational use by the general public in a way that benefits the national forests and the agency.

One respondent supported new provisions in the directives requiring all groups to register with the Forest Service to gain access. This respondent believed that this requirement would help manage use and mitigate impacts from noncommercial and commercial use. This respondent also suggested that all groups utilizing NFS lands be subject to fees and stated that these fees would support proper administration, resource protection, user education, and law enforcement. One respondent suggested that both for-profit and non-profit outfitters and guides receive priority with respect to obtaining an allocation if they provide educational programs and services, since educational programs directly support the agency's mission to educate visitors to the national forests. Another respondent suggested making unused service days available to priority use outfitters and guides first. Many respondents wanted assurance that the proposed directives would not require allocation of use in areas where it is not currently required, such as on the Deschutes River and in the Boundary Waters Canoe Area (BWCA).

*Response.* There appears to be some confusion among respondents about the scope of these directives. These directives will be included in the Forest Service's Special Uses Handbook (FSH 2709.11) and are specific to administration of outfitting and guiding. Outfitting and guiding on NFS lands are commercial activities that require a special use authorization under 36 CFR 251.50(a) and the Special Uses Handbook. These directives do not govern noncommercial recreational activities conducted by individuals or groups. Generally, a special use authorization is not required for noncommercial recreational activities, such as camping, picnicking, hiking, fishing, boating, hunting, and horseback riding (36 CFR 251.50(c)).

Moreover, the Forest Service generally does not allocate use for noncommercial activities. However, some congressionally designated areas are governed by specific statutes, such as the Wild and Scenic Rivers Act, which require the Forest Service to limit recreational use. Limits on all recreational use in these areas are determined in the planning process for the areas, and a system may be established to manage unguided recreation in these areas. For example, the BWCA is a congressionally designated wilderness area that has a lottery system for unguided recreation. In addition, special use permits are issued to commercial outfitters and guides operating in the BWCA. The Forest Service does not manage the lower sections of the Deschutes River, which are used for recreational river runs. Rather, those sections are under the jurisdiction of BLM.

The Forest Service does not believe that allocation of use for commercial operators should be optional. The agency depends on allocation of use to quantify and manage outfitters' and guides' use of NFS lands. It is not feasible for commercial outfitters and guides to plan and market their businesses without knowing how much use they are authorized to conduct on NFS lands.

The agency believes that regulation of commercial and noncommercial use pursuant to applicable regulations and directives is sufficient and that registration of users of NFS lands is unnecessary. In addition, the propriety of registration of users of NFS lands is beyond the scope of these directives. The Forest Service may and does charge fees only as provided by applicable law.

As stated above, whether outfitters and guides provide educational services is irrelevant to their eligibility for allocation of use under the directives. Under the directives, outfitters' and guides' eligibility for allocation of use depends on whether they hold a priority use (longer-term) permit as opposed to a temporary use (shorter-term) permit. The agency believes that qualification for a longer-term permit is a more objective and appropriate basis for triggering allocation of use than the characteristics of services provided.

The final directives enhance allocation of unused service days and quotas for both temporary use and priority use permit holders. See sections 41.53k and 41.53n in the final directives.

*Comments Concerning Planning.* One respondent stated that the proposed directives failed to create a consistent planning process linking outfitting needs assessments, resource capacity analysis, and use allocation as well as linking all of these to existing standards and guidelines in the applicable land management plan, other relevant planning documents, and Forest Service policy. Another respondent stated that the final directives should require development of outfitting and guiding plans.

*Response.* It is not the purpose of these directives to address land management planning. The Forest Service has separate directives governing this topic (see FSM 1921). The basic unit of Forest Service planning is the land management plan. To the extent appropriate, land management plans may address outfitting and guiding use. When required by statute, a plan is prepared for a congressionally designated area and is incorporated into the applicable land management plan. Wilderness management direction is prepared as a part of the land management planning process as required by 36 CFR part 219 and FSM 1922. Planning is also conducted in compliance with the National Environmental Policy Act (NEPA) (36 CFR part 220, FSM 1950, and FSH 1909.15). The applicable land management plan is implemented through development of schedules for projects and activities designed to meet management standards and guidelines established for the wilderness area. Additionally, the agency has directives governing wilderness planning (FSM 2322) and river recreation management (FSM 2354). These directives should be read in conjunction with the directives on outfitting and guiding administration. The Forest Service believes that existing planning tools are sufficient and that outfitting and guiding land use plans are unnecessary.

*Comments Concerning Public Involvement.* One respondent was concerned that the proposed directives did not require public involvement for an outfitting and guiding needs assessment, resource capacity analysis, and use allocation or enumerate how the agency would otherwise comply with NEPA during these processes. Various respondents noted that decisions to authorize outfitting and guiding should be accompanied by environmental analysis that is conducted at the appropriate scale (regional, forest, district, or watershed level); that includes a needs assessment,

resource capacity analysis, and a reasonable range of alternatives for allocation of use to make the allocation process transparent; and that allows for public involvement, efficient analysis of cumulative impacts, development of more effective mitigation, and regional assessment of educational outfitting and guiding needs and providers. One respondent also noted that the Forest Service needs to address analysis of cumulative impacts at the appropriate temporal and spatial scales and compliance with other relevant statutes, including the Endangered Species Act and National Historic Preservation Act.

Several respondents were concerned about NEPA compliance associated with issuance of temporary use permits and noted that the proposed directives are silent on this issue. One respondent noted that environmental analysis associated with many recreation-related activities remains incomplete because it is time-consuming and expensive. One respondent believed that issuance of temporary use permits under the proposed directives without environmental analysis would simplify administration of the outfitting and guiding program and reduce agency costs. One respondent noted that a perception exists that NEPA and cost recovery requirements do not apply to temporary use permits.

*Response.* There appears to be confusion among respondents regarding the trigger for environmental analysis and the relationship among a needs assessment, a capacity analysis, and an environmental analysis. The Forest Service has separate directives governing environmental policy and procedures (see FSH 1909.15). These directives govern environmental analysis, scoping, and public participation and should be read in conjunction with these directives. Comments regarding public involvement and environmental analysis related to outfitting and guiding permits are therefore beyond the scope of these directives.

Needs assessments and resource capacity analyses are not agency decisions subject to environmental analysis. Rather, they are analytical tools that inform an agency decision. For example, a needs assessment could support a decision to issue a permit. A needs assessment also could support a decision to amend a land management plan. Additionally, a needs assessment and resource capacity analysis are typically used to develop a river management plan. The outfitting and guiding directives are intentionally flexible with regard to selection of the geographical area to be analyzed for efficient outfitting and guiding administration because the authorized officer is in the best position to determine the appropriate scope of analysis.

Decisions that are made to authorize use pursuant to a needs assessment and resource capacity analysis, including issuance of permits, amendments of land management plans, and allocations of use in plans, are subject to NEPA. The Forest Service complies with applicable law and policy, including NEPA, in making these decisions.

*Comments Concerning Resource Capacity Analysis.* One respondent supported the direction to base allocations of use on accurate resource capacity analyses and needs assessments. One respondent recommended revising section 41.53e, paragraph 1b, to provide for review of previous needs assessments ''with new public input'' when reauthorizing use. One respondent stated that where a needs assessment identifies over-capacity, no new outfitting and guiding should be considered. One respondent recommended that section 41.53e be revised to require completion of a resource capacity analysis, followed by a needs assessment, and use of the information gained from these analyses in making decisions on allocation of use. One respondent believed that this section implied that all future wilderness, wild and scenic river, and land management plans would include allocations for priority and temporary use and that these allocations should be based on capacity studies and needs assessments.

One respondent believed that the directives should require development and implementation of allocation plans before, rather than after, resource capacity has been reached. This respondent wondered who would determine when information regarding resource capacity is reliable and when resource capacity has been reached. One respondent recommended revising section 41.53e, paragraph 2, to require that a resource capacity analysis be performed to assess the amount of use and types of activities that may be conducted without detrimental environmental or social impacts prior to establishing any quotas or allocating service days in permits.

*Response.* The Forest Service agrees that when complexity warrants, such as when multiple proposals are submitted for limited resources or when coordinated review of proposals is otherwise required, allocations of use should be supported by a resource capacity analysis and needs assessment.

However, a resource capacity analysis and needs assessment are not necessary for simple situations. Resource capacity analyses and needs assessments are costly, and decisions to revisit them need to be efficient.

If a resource capacity analysis identifies over-capacity, no additional use will be authorized, and existing use may be reduced. Either a resource capacity analysis or a needs assessment may eliminate a proposal from further analysis. The authorized officer has the discretion to determine which analysis to conduct first for management efficiency.

The purpose of a resource capacity analysis is to quantify the amount and type of activities that can be accommodated in a geographical area. When multiple entities want to use the same area or when multiple activities are proposed in the same area, it is necessary to evaluate the variety of uses proposed and to determine which ones to accommodate. For example, 15 entities may submit proposals when there is capacity for only 5 entities, in which case, applicants will be selected competitively (for priority use) or by lottery (for temporary use). As stated above, resource capacity analyses are not subject to environmental analysis.

The agency has modified section 41.53e, paragraph 2, to clarify that when monitoring indicates that impacts associated with use may exceed desired conditions, a resource capacity analysis should be conducted.

*Comments Concerning Needs Assessments Generally.* One respondent stated that needs assessments should be timely, based on sound science, and involve public scoping. One respondent encouraged the agency to assess public demand based on accurate visitor information and prior to assessing the need for commercial services. Another respondent stated that the allocation of service days to a large extent is arbitrary because it is based on a needs assessment that might not have a scientific basis and that service days may be increased when there is no need for additional services. One respondent believed that visitor preference surveys should not be the only means to determine use allocations because these surveys fail to measure the preferences of future visitors or past visitors who have been displaced from an area due to use trends. Another respondent wondered how the agency would acquire data on use by public and institutional groups that are not currently authorized to operate for purposes of performing accurate needs assessments.

Several respondents stated that the Forest Service should confer with or defer to states when issuing or limiting permits involving fishing and hunting. One respondent believed that the proposed directives would weaken the role a needs assessment plays in determining the appropriateness of issuing outfitting and guiding permits for hunting.

Another respondent proposed revising section 41.53e, paragraph 3, to read: ''Determine the allocation of use between outfitted and guided visitors and self-outfitted, non-guided visitors,'' and striking the last sentence regarding allocation of temporary use. One respondent stated that temporary use pools should not be formed by decreasing the allocation of use to the public or by increasing allocations of use, but rather by employing unused commercial allocations. Another respondent believed that educational outfitters and guides need to be given preference in allocations of use so that they can provide essential safety, land ethics, and educational services the Forest Service cannot provide. One respondent underscored the importance of treating all users equitably when making choices about the levels of use in a needs assessment.

Yet another respondent suggested that no change be made to any priority use allocations until a resource capacity analysis has been completed. One respondent recommended that a resource capacity analysis be conducted before renewal of priority use permits.

*Response.* The purpose of a needs assessment in the context of commercial outfitting and guiding is to evaluate the need for a public service. The public may have a need for outfitting and guiding services (e.g., guidance, skills, or equipment necessary to access certain amenities or conduct certain recreational activities) or the agency may have a need for these services (e.g., to reduce incidents that involve search and rescue or to promote leave no trace ethics). If there is no need for these services, an outfitting and guiding proposal will not be accepted.

The agency agrees that needs assessments should be timely and based on sound information. The Forest Service has two scientifically based methods for surveying public recreation needs: National Visitor Use Monitoring, which involves systematically interviewing clients on site for each national forest and national grassland, and the National Survey on Recreation and the Environment, which involves interviewing the general public by telephone. In addition to these resources, local managers can rely on their experience regarding the types of requests they receive for recreational use, public comments, and field observation of recreational use.

The Forest Service coordinates with state fish and wildlife agencies when evaluating the need for outfitting and guiding. The states' projected animal harvest levels are a key component of a needs assessment. The agency does not believe that these final directives will weaken the role of a needs assessment in determining the appropriateness of authorizing outfitting and guiding for hunting. Rather, the agency believes these directives will enhance consistency in the use of needs assessments.

The agency knows from discussions with youth groups, camps, and universities which use or would like to use NFS lands that access to outfitting and guiding permits could be improved by creating a sustainable reserve of use for short-term temporary permits. One of the objectives of preparing these directives was to simplify the process for issuing temporary use permits so as to increase public access to NFS lands and outfitting and guiding opportunities. The agency believes that the final directives strike a balance between supporting current and future outfitters and guides and establishing a process that will improve public access to recreational opportunities and public service. Sections 41.53k and 41.53n in the final directives address formation and operation of temporary and priority use pools. These pools will be formed from unemployed use. The appropriate distribution of priority use, temporary use, and unguided use will be determined on a site-specific basis using processes outlined in these and existing directives. The agency does not believe that it is appropriate to establish preferences for allocation of use based on the characteristics of the services provided.

A decision to adjust allocation of use in or to renew a priority use permit is separate from a decision to authorize use. The allocation of use in a priority use permit is a privilege that can be lost through non-use. Under certain conditions, the agency may shift unemployed use to another outfitter. See section 41.53m. Priority use permits are renewable, provided that certain conditions are met. See section 41.53l.

*Comments Concerning Needs Assessments and Wilderness Areas.* Several respondents advised that when conducting a needs assessment for outfitting and guiding in a wilderness area, the agency should assess whether these activities are necessary and proper for realizing the recreational or other wilderness purposes of the area and the extent to which the activities may or may not be authorized consistent with maintaining the wilderness character of the area. These respondents recommended that the agency evaluate the spatial and temporal scope of commercial services to be authorized and document the wilderness purpose achieved by those services.

Another respondent proposed revising the directives to state that outfitting and guiding are nonconforming uses in wilderness areas that should not impair their wilderness character. One respondent objected to authorization of commercial use in all congressionally designated areas. Another respondent believed that the proposed directives were inconsistent with the intent of the Wilderness Act with regard to allocation of use to outfitters and guides in wilderness areas.

Another respondent believed that needs assessments for wilderness areas must balance guided activities, such as hunting and equestrian trips, with unguided activities, such as backpacking and hiking. Another respondent believed that the increase in motorized use has caused more conflicts with quiet activities like backpacking and hiking, and that therefore more service days in wilderness areas are required. Yet another respondent stated that the mission of youth and university-based programs is aligned with wilderness areas and that these programs need more service days in wilderness areas.

*Response.* Before commercial activities, including outfitting and guiding, are authorized in a wilderness area, a needs assessment must be completed that addresses the extent to which the activities are necessary for realizing the recreational or other wilderness purposes of the area. An environmental analysis, possibly including a capacity analysis, must also be completed to analyze the effects of the proposed activities on the wilderness character of the area. Both of these requirements are addressed in the final directives in sections 41.53e, paragraph 1a, and 41.53h, paragraph 3. The Wilderness Act and agency wilderness policy require that wilderness character be preserved.

The Forest Service disagrees that outfitting and guiding is a non-conforming use of wilderness areas. The Wilderness Act specifically allows for commercial services to be performed in wilderness areas to the extent they are necessary and proper for realizing the recreational or other wilderness purposes of the areas.

The appropriate distribution of priority use, temporary use, and unguided use in wilderness areas will be determined on a site-specific basis using processes outlined in these and existing directives. The Forest Service does not believe that more service days in wilderness areas are required because of a growth in motorized recreational use. The amount of service days allotted in wilderness areas will be based on the need to provide an outfitted and guided experience in wilderness areas, while preserving their wilderness character.

The Forest Service believes that the mission of many for-profit as well as non-profit outfitters and guides is aligned with wilderness areas and that all these operators can provide the public with a successful wilderness experience. Therefore, the agency does not believe that youth and university-based programs need more service days in wilderness areas based on the mission of these programs.

*Comments Concerning Needs Assessments and Quotas.* A respondent recommended that quotas be applied equally to all recreational uses and that outfitters and guides not be permitted to have larger group sizes. Another respondent stated that allocation of trailhead entries in a wilderness management plan is more important than allocation of service days.

*Response.* How much use to allocate to various recreational users and outfitters and guides is determined by a needs assessment. Distribution of an equal amount to all may not be the best method of serving the public. Under these directives, the authorized officer has discretion to determine whether to manage use by service days or quotas. A limit on trailhead entries is a quota, which, like service days, is a way of measuring use.

41.53f—When Permits Are Required

*Comments.* One respondent recommended changing the terminology in section 41.53f, paragraph 1, from ''priority use'' to ''commercial use.''

Another respondent suggested that the final directives provide clear and consistent direction to the field on development and issuance of the new temporary use permit.

*Response.* In the final directives, the Forest Service has retained the term ''priority use'' to describe permits that are issued for a period of up to 10 years to provide commercial public services. Current directives state that (1) Priority use is intended for ongoing operations, (2) priority use permits will be reissued if there is sustained satisfactory performance by the holder, and (3) a comparable permit will be issued to the purchaser of the assets of a holder of a priority use permit if the purchaser is technically and financially qualified. Since outfitters and guides are familiar with the term ''priority use'' and its meaning and since the Forest Service is not changing the characteristics of priority use, it is not necessary to change the term.

There will be a standard national form for temporary use permits. Additionally, the Forest Service plans to conduct training on the new directives, including use of the new form.

41.53g—Issuance of New Outfitting and Guiding Permits

*Comment.* One respondent recommended adding language to section 41.53g, paragraphs 2a through 2e, 3, and 4, to allow outfitting and guiding only after the needs for unguided recreation have been met.

*Response.* The agency does not believe that it is appropriate to supplant site-specific needs assessments with a presumption that unguided recreation should take precedence over guided recreation.

*Comments.* One respondent supported limiting use when required for protection of national forest resources. However, this respondent requested additional information about competitive issuance of permits and was concerned about the administrative and financial burden, particularly for small outfitting and guiding operations, of responding to a prospectus.

Another respondent was concerned about migration toward competitive issuance of priority use permits because of the lack of standard procedures for making selections. One respondent believed that the agency should clarify policy on competitive issuance of permits. Other respondents were concerned about how the agency makes selections in a competitive process when applicants are similarly qualified. These respondents supported the use of performance-related criteria in selection decisions.

Some respondents observed that the return to the Federal government should not be a selection criterion, and others were concerned that financial capability would become the tie-breaking factor. Another respondent recommended consideration of past experience, knowledge of the area, financial capability, economic viability of existing holders, performance record, return to the Federal government, and other factors in selecting the most qualified applicant. One respondent recommended adding the consideration of interpretive skills, educational skills, and performance record, including use of leave no trace techniques, to the list of evaluation criteria.

One respondent noted that since institutional outfitters and guides do not earn as much revenue as for-profit outfitters and guides, institutional outfitters and guides are at a disadvantage in a competitive process, which requires submission of a proposed land use fee based on a percentage of revenues.

*Response.* It has been a long-standing policy of the Forest Service to offer new business opportunities competitively when there are multiple interested parties and not all of them can be accommodated (FSM 2712.1). That policy is now codified at 36 CFR 251.58(c)(3)(ii). FSM 2712.1, paragraph 3, lists the following evaluation criteria for applications submitted in response to a prospectus: Kind and quality of services proposed in terms of meeting public need; the applicant's experience in this or related fields and the applicant's qualifications to fully satisfy the public need for service; verification of financial resources; and return to the government. These directives supersede paragraph 3 of FSM 2712.1 and include the following as evaluation criteria for selecting among applicants for an outfitting and guiding permit: the applicant's experience, knowledge of the area to be authorized, financial capability, performance record as an outfitter or guide, and other pertinent factors. To address the concern regarding the competitive disadvantage of institutional outfitters and guides, the agency has revised section 41.53g, paragraph 3a, to clarify that return to the government is not a selection criterion for outfitting and guiding permits at this time.

When a prospectus is being prepared, the authorized officer has the discretion to determine the type of services desired and may make the provision of those services a requirement for applicants. For example, the prospectus may require interpretation, education, or instruction of leave no trace ethics.

41.53h—Applications for Outfitting and Guiding Permits

*Comments.* One respondent asked that the directives include a description of an applicant's qualifications for both priority and temporary use. Another asked that a description of an applicant's qualifications be included in the application form. Additionally, some respondents suggested that qualifications for first aid and emergency evacuation procedures for backcountry be described in the application form.

One respondent noted that applicants should be required to state and document their experience in providing services. One respondent suggested enumerating what an applicant must submit.

One respondent recommended deleting the phrase ''proposed number of service days or quotas'' from section 41.53h, paragraph 2. Another respondent believed that it was not appropriate to let applicants for outfitting and guiding permits identify the service days or quotas they need without considering the need of the unguided public. One respondent suggested that schools complete one application each year for uses they conduct in multiple forests.

*Response.* Special use regulations at 36 CFR 251.54(d) and Forest Service directives at FSH 2709.11, section 12.31, address the content of proposals and the information required from a proponent or applicant to determine technical and financial qualifications. These regulations and directives should be read in conjunction with these final directives. One of these requirements is a project description, which for outfitting and guiding must include the amount of use an applicant proposes to conduct. Authorized officers need the discretion to determine specific qualifications and knowledge appropriate or necessary for a particular operation in a particular location. Therefore, it would not be appropriate to predetermine those qualifications.

The Washington Office and Regional Offices of the Forest Service are not staffed to allow for submission of a single proposal and application for outfitters and guides who propose to conduct operations on multiple forests. In addition, since the supporting environmental analysis for outfitting and guiding applications must be site-specific, it does not make sense to consolidate proposals and applications for outfitting and guiding.

41.53i—Requirements for Temporary and Priority Use Permits

*Comments.* Many respondents proposed that there be no assigned sites set aside specifically for outfitters and guides. These respondents believed that assigning sites would conflict with unguided use of Federals lands and that it is inappropriate to set aside assigned sites for outfitters and guides, since their services are not available to the general public free of charge.

*Response.* Assignment of sites is a management tool available to the authorized officer. These directives describe how to address assignment of sites in a permit; these directives do not require or effect assignment of sites. Assignment of sites is a site-specific decision. Current Forest Service directives already provide for assignment of sites to outfitters and guides (*see* FSH 2709.11, sec. 37.05 and 37.21h). The topic is included in section 41.53i for purposes of administrative efficiency.

*Comments.* One respondent objected to the requirement in section 41.53i, paragraph 4, to submit a report on actual use within 30 days of the close of the operating season on the grounds that it is unnecessary and contrary to local practice. Another respondent suggested revising section 41.53i, paragraph 4, to provide for submission of the report at the beginning of each operating season or when needed.

*Response.* The requirement to report actual use within 30 days of the end of the operating season is necessary for timely reconciliation of land use fees and was not proposed for revision.

41.53i, Paragraph 5—Contracts for Ancillary Services and Equipment

*Comments.* One respondent supported section 41.53i, paragraph 5, which authorizes outfitters and guides to contract for ancillary services. Another respondent agreed that permit holders should be responsible for the actions of their subcontractors. This respondent also believed that the directives should recognize holders' use of volunteers, as well as employees.

Another respondent requested clarification as to which services would be deemed ancillary and wondered whether services provided by faculty members who are contractors rather than full-time employees would be considered ancillary. One respondent noted that most Montana fishing outfitters and guides use licensed guides as independent contractors, rather than hiring guides as employees; that to be certified by the Montana Department of Labor and Industry as an independent contractor, contractors must not be under the direct control of the contracting party, as they would be classified as employees; and that unless paragraphs 4 and 5b of section 41.53i are revised, they will prevent Montana outfitters and guides from using independent contractors under their special use permits. Another respondent requested that the directives encompass arrangements that enable holders to provide a range of unique opportunities to the public, such as contracting for the services of a guest speaker or instructor.

Another respondent believed that contracted services should be provided by other permitted outfitters and guides, and that it was not appropriate to cede management of trips to a holder who has no experience. Another respondent believed that many insurers would not cover the activities of subcontractors and wanted to add language to section 41.53i, paragraph 5b(2), to read: ''The contracted guide or outfitter who already holds a permit at the resource has all required state licenses and appropriate Forest Service permits.''

One respondent believed that section 41.53i, paragraph 5c, which authorizes contracting for additional services and equipment in emergencies, was too restrictive in requiring those services and equipment to be provided by another permit holder. This respondent was concerned that additional services and equipment might not be available from another holder. One respondent stated that the Forest Service should not dictate to private businesses whom they can employ.

Another respondent believed that the requirement that the contracting holder exercise management authority over day-to-day operations, including guiding services, could void the contracted guide's liability insurance and suggested striking section 41.53i, paragraph 5b(4).

Some respondents questioned the requirement for an insurance policy endorsement for contractors who provide ancillary services and equipment. Another questioned the requirement in section 41.53i, paragraph 5a(3), for a holder to submit a contract for ancillary services at the beginning of the operating season. This respondent noted that the need for ancillary services may not be identified until the last minute. One respondent was concerned that section 41.53i, paragraph 5c, would encourage illegal sublicensing of permits.

*Response.* The Forest Service developed the provisions authorizing contracts for ancillary services and equipment in response to requests from holders, who believe that the existing directives, which do not allow these contracts, are too restrictive. In order for legal requirements to be met, permit holders must remain responsible for all activities authorized by their permit and may not circumvent their responsibility through the use of contractors or volunteers. Everything authorized under an outfitting and guiding permit, including contracts for ancillary services and equipment, must be covered by insurance. For further discussion of insurance, see the response to comments on proposed FSH 2713.1, paragraph g.

These directives do not require the use of contracts for ancillary services and equipment. Rather, they allow the

use of these contracts, subject to certain conditions. The requirement to submit contracts for ancillary services and equipment at the beginning of the operating season is intended to allow sufficient time for review.

The Forest Service does not dictate whom outfitters and guides can employ. The directives give holders the option of utilizing existing holders, whose skills, experience, and insurance coverage are known to the authorized officer, to avoid submission of a contract for ancillary services and equipment at the beginning of the operating season. Additionally, the final directives give holders' contractors the option of procuring a separate insurance policy that covers their services and equipment and that names the United States as an additional insured.

The final directives at FSH 2709.11, section 41.53d, define an ancillary service as ''a service that supports use authorized by an outfitting and guiding permit and that is provided by a party other than the holder or the holder's employees or agents.'' This definition is broad enough to include the services of a guest speaker or instructor.

A faculty member who is hired by a school as a contractor and provides ongoing outfitting and guiding services for the school would not be a contractor for purposes of these directives because outfitting and guiding is the primary use authorized by the permit, rather than an ancillary service that supports the authorized use. Thus, the faculty member must be covered by the holder's insurance. Likewise, licensed guides in Montana who are hired as independent contractors, rather than as employees, to provide ongoing outfitting and guiding services for permit holders are agents of the holder and would be providing the primary service, rather than an ancillary service, under the final directives.

*Comments.* One respondent objected to proposed section 41.53i, paragraph 5a(3), which would authorize priority use permit holders to contract for the services of a specialized guide for people with disabilities or highly technical trips on the grounds that the provision was equivalent to a requirement for specialized certification for guides and therefore burdensome to nonprofit outfitters and guides. Another respondent stated that it was useful to have the flexibility to contract for ancillary services and equipment, thereby significantly lowering specialized capital expenditures.

*Response.* Section 41.53i, paragraph 5a(3), does not require specialized certification for guides. To the contrary, paragraph 5a(3) gives outfitters and guides the flexibility to contract, as needed, for guides with specialized training or skills.

*Comments.* One respondent commented that the Forest Service should not allow partial transfers of authorized use. Another respondent stated that some outfitters and guides swap service days and that this practice should not be prohibited. Yet another respondent proposed amending section 41.53i, paragraph 6, to allow the Forest Service to approve transfers or reassignments of authorized use to an affiliate of an existing holder. One respondent suggested revising section 41.53i, paragraph 6, to authorize transfers or reassignments of authorized use in connection with a change of control of a business entity that holds a permit. One respondent suggested reinforcing the language that precludes transfer of a permit. One respondent was concerned that section 41.53i, paragraph 5c, could allow hunting guides to increase staff and operations without oversight and could result in concentration of hunters.

*Response.* Long-standing Forest Service policy has reserved the authority to allocate use to the authorized officer. Allowing holders to transfer or reassign use would undermine the agency's ability to manage resources and to provide for public safety and liability protection. Permits and allocations of use are not transferable. However, under both the current and revised directives, when there is a change of ownership or control of a holder of a priority use permit, the Forest Service issues a new priority use permit to the purchaser if the purchaser is technically and financially qualified. In addition, utilization of allocations is reviewed, and allocations are adjusted, if appropriate (see FSH 2709.11, 41.53m). Outfitter and guide staffing and operations are addressed in operating plans, which are prepared by the holder in consultation with the authorized officer and approved by the authorized officer.

41.53j—Issuance of Temporary Use Permits

The Forest Service received many comments on proposed section 41.53j. Some of these comments resulted in creation of three new sections. For clarity, comments and responses on the following topics have been moved to their corresponding new sections:

(1) Temporary use pools: section 41.53k, Management of Temporary Use Pools;

(2) priority use pools: new section 41.53n, Management of Priority Use Pools;

(3) conversion of temporary use permits issued under the 1995 policy to priority use: new section 41.53p, Transitional Priority Use

*Comments Regarding the 100-Day Limit on Service Days for Temporary Use.* Several respondents favored the creation of temporary use pools, but were concerned about the 100-day limit on service days for the pools. These respondents believed that it would be difficult to run more than one program during a season with only 100 service days and suggested a 200-day limit instead. One respondent suggested a 150-day limit, and another recommended a 250-day limit. One respondent observed that there are outfitters and guides who offer special week-long events that have a large number of participants (200 to 3,000) at one time, that this type of event would not qualify for a temporary use permit due to the 100-day limit, and that the outfitters and guides would therefore have to obtain a priority use permit. One respondent suggested that temporary use permits for all four seasons be offered at the beginning of every calendar year. One respondent suggested that additional consideration be given to permit holders interested in off-season use.

*Response.* The Forest Service agrees that the amount of use available for a temporary use permit should be increased and has revised section 41.53j, paragraph 1, in the final directives to provide for up to 200 service days for temporary use permits. The Forest Service does not agree that the number of service days should be increased further to accommodate large groups. Holders who intend to serve large numbers of clients at one time should obtain a priority use permit.

Additionally, section 41.53j, paragraph 2, provides that a holder may obtain one temporary use permit every 180 days. Thus, a temporary use permit holder will be able to operate in more than one season. Applicants wanting a permit in the off-season should have a good chance of getting one because there will be less use in the off-season.

*Comments Concerning Qualifications.* Several respondents believed that the Forest Service would not evaluate the qualifications of applicants for temporary use permits and would not maintain a record of their performance and that failing to do so was not in the public interest and was arbitrary and capricious. One respondent was concerned that proposals to authorize temporary use could conflict with state requirements for licensing outfitters and guides. Another respondent stated that the Forest Service should coordinate

with state licensing agencies regarding an applicant's qualifications and not duplicate state screening processes. One respondent wondered whether it would be possible to get a temporary use permit if an outfitter and guide never had a Forest Service outfitting and guiding permit. One respondent believed that educational outfitters and guides could be at a disadvantage in competing with for-profit outfitters and guides for temporary use permits.

*Response.* All applicants for special use permits must be qualified to conduct the activities that they propose (see the response to comments on section 41.53h regarding applicants' qualifications). If a state requires licensing for outfitters and guides, the Forest Service will require the holder to obtain a state license to be eligible for a Forest Service permit. However, very few states have a licensing requirement for outfitters and guides, and even those that do may require a license only for a few activities, such as hunting. Applicable qualifications are determined at the local level. Proponents and applicants do not have to have had a Forest Service permit; they must merely demonstrate their technical and financial qualifications for a permit. The agency does not elevate for-profit over non-profit status. The agency has revised section 41.53h, paragraph 2, to provide that proponents and applicants must describe their technical and financial qualifications to provide the services that they are proposing.

*Comments Concerning Performance Ratings and Operating Plans.* Several respondents recommended revising section 41.53j, paragraphs 11 and 12, to require annual performance evaluations and operating plans for holders of temporary use permits to encourage acceptable performance. Another respondent believed that conducting performance evaluations for holders of temporary use permits would enhance public safety and resource protection. One respondent recommended establishing performance standards for all permit holders and informing them of the potential for inspection and performance review. One respondent suggested requiring holders to adhere to a set of standards regarding public health and safety, protection of resources, and education of national forest visitors. Several respondents stated that not requiring performance evaluations and operating plans for temporary use permit holders would exempt them from regulatory oversight, which would be unfair to priority use permit holders.

One respondent observed that there is no guidance to field staff on when to require operating plans and that operating plans should be required for higher-risk activities and activities conducted in remote settings. One respondent suggested revising section 41.53j, paragraph 12, to provide that operating plans generally are required for higher-risk activities or activities conducted in remote settings and that operating plans should be required for extensive overnight backcountry use. Another respondent suggested that in lieu of a multi-page operating plan, the Forest Service should require a 1-page worksheet.

*Response.* The Forest Service agrees that temporary use permits should have an operating plan. Accordingly, the agency has revised section 41.53j, paragraph 6, in the final directives to provide that holders of temporary use permits must have an operating plan that addresses public health and safety, emergency procedures, and resource protection. However, the final directives do not require a performance evaluation for holders of temporary use permits. The Forest Service believes that it would be costly and unnecessary to require performance evaluations for temporary use permit holders. However, the agency has added section 41.53j, paragraph 8, to clarify that violations of law, customer complaints, and adverse performance ratings from the Forest Service or other agencies will be considered in evaluating an applicant's technical qualifications.

*Comment.* One respondent recommended revising proposed section 41.53j, paragraph 2, so that the geographic basis would be ''per area consistent with'' a needs assessment and capacity analysis, rather than ''per area specified in'' those documents.

*Response.* The Forest Service has revised section 41.53j, paragraph 2, to read ''per use area.''

41.53j—Management of Temporary Use Pools

*Comments Regarding the Concept of Temporary Use Pools.* Several respondents supported temporary use pools. One respondent believed that they would give the public more choice by allowing institutional groups to provide commercial services, as well as expand services offered in an area.

Several respondents believed that the proposed directives were unclear regarding how temporary use permits would be allocated. These respondents also believed that the proposed directives were vague regarding procedures for establishment of temporary use pools and that temporary use pools would create administrative burdens for the agency and confusion for applicants. These respondents questioned how long it would take to establish temporary use pools; how use would be distributed from the pools; and what would happen if critical elements of the directives regarding temporary use pools were not implemented. These respondents stated that how fast a temporary use pool is established will depend on the Ranger District's ability to complete analyses and identify priority use permit holders' unused service days and terminated temporary use permits.

One respondent suggested allowing temporary use permit holders to utilize priority use permit holders' unused service days on an annual basis. One respondent was concerned that service days for temporary use pools would be taken from existing priority use permits, at the expense of small commercial outfitters. One respondent believed that extensive authorization of temporary use would undercut the privileges of priority use permit holders.

One respondent noted that it is more financially efficient, less time-consuming, and safer for schools and other organizations to hire a priority use permit holder than to offer their own outfitting and guiding programs and that schools and other organizations buy lower-quality equipment than for-profit outfitters and guides.

One respondent recommended revising section 41.53j, paragraph 7, to provide that the unguided public may obtain for use from a temporary use pool on a first-come, first-served basis through a lottery system or through some other equitable method of allocation. Additionally, this respondent believed that allocations for temporary use pools should come from priority use permit allocations.

*Response.* The Forest Service agrees that temporary use pools will enhance public service and outfitting and guiding opportunities for qualified entities that previously had difficulty obtaining short-term permits. Some administrative units already have needs assessments and capacity analyses completed and will be able to establish these pools promptly. Other units have needs assessments and capacity analyses underway and should be able to implement pools within a year. Other units will have to initiate these tasks and may take a year or two to establish a temporary use pool.

The Forest Service agrees that more direction is needed on management of temporary use pools and has added a new section 41.53k, Management of Temporary Use Pools. Units may

authorize temporary use in accordance with section 41.53j without establishing a temporary use pool. However, a temporary use pool may be necessary in high-demand areas.

Operators of youth camps and university programs have for many years expressed frustration with their limited access to outfitting and guiding permits. These operators are not likely to hire a for-profit outfitter and guide unless they do not have the equipment or staff necessary to conduct a trip. Many university programs are training students to lead outdoor adventures. Operators of these programs are not satisfied that the services offered by for-profit outfitters and guides fit the educational and training objectives of these programs. Improving the access of youth camps and universities to temporary use permits will not detract from the privileges of priority use permit holders.

Issuance of noncommercial recreation permits to individuals and groups is beyond the scope of these directives, which govern outfitting and guiding. For additional discussion regarding unguided recreation, see the response to comments on proposed section 41.53e, Needs Assessments, Resource Capacity Analysis, and Allocation of Use.

*Comments Regarding the Function of Temporary Use Pools.* Several respondents commented on the function of temporary use pools. One respondent wanted priority use permit holders to be able to apply for a temporary use permit from a pool at least 120 days in advance. One respondent believed that holders of priority use permits should be allowed to apply for a temporary use permit 180 days in advance. Many respondents believed that it was not feasible to plan and schedule trips with only 30 days notice. One respondent recommended revising section 41.53j, paragraph 5, to treat all applicants the same. Another respondent wanted all permit holders to be able to apply for a temporary use permit 12 months in advance, so that they could manage their programs. One respondent questioned whether a priority use permit holder authorized to operate on one national forest could apply for a temporary use permit to operate on another national forest 12 months in advance.

One respondent suggested that the Forest Service establish open seasons for applications for each type of permit in each use area. This respondent believed that accepting applications on a first-come, first-served basis would result in competition to obtain permits and would make it more difficult for small outfitters and guides to obtain permits. One respondent suggested revising proposed section 41.53j, paragraph 9, to provide that priority use service days or quotas not used within the first month of a priority use permit term be reallocated to a pool for access by all recreational use groups. One respondent recommended deleting proposed section 41.53j, paragraphs 5, 6, and 7, on the ground that they would limit access to temporary use permits by priority use permit holders.

*Response.* New section 41.53k, Management of Temporary Use Pools, in the final directives provides for establishment of one or more open seasons, specifies who may apply during an open season, addresses distribution of any use remaining after an open season has closed, and allows the authorized officer to shift service days between temporary and priority use pools based on their utilization. Service days or quotas may be allocated to a temporary use pool based on a resource capacity analysis demonstrating that additional capacity exists; a determination that service days or quotas have been insufficiently used during the first 5 years of a priority use permit; or a determination that service days or quotas may be reallocated when a priority use permit is revoked or not renewed.

Priority use permit holders in the use area are ineligible to apply for use from a temporary use pool during the open season. However, after the open season, priority use permit holders in the use area may apply for use from a temporary use pool, provided that if a priority use pool has been established for the same use area, applications for any remaining service days may be restricted to qualified applicants who do not hold a priority use permit. Priority use permit holders outside the use area may apply for use from a temporary use pool during the open season.

The Forest Service has also added section 41.53n in the final directives. This new section provides for establishment of priority use pools and contains direction on application and operating procedures for the pools, including the timing and number of open seasons.

In the final directives, the Forest Service has replaced the term ''administrative unit,'' which includes a national forest, national grassland, or other comparable unit of the NFS per 36 CFR 212.1, with ''use area,'' which is now defined in section 41.53d as any geographical configuration that allows for efficient management.

41.53l—Issuance of Priority Use Permits

In the proposed directives, this section was numbered as section 41.53k.

*Comments.* One respondent did not object to providing outfitting and guiding opportunities for institutional and youth organizations and observed that many of these entities already hold priority or temporary use permits. One respondent requested that institutional users not be given a free permit and not be able to have their permit reissued to a for-profit business. One respondent did not support a system exclusively for institutional use. Another respondent believed that both non-profit and for-profit entities should be able to provide commercial services.

*Response.* The final directives remove the prohibition against issuing priority use permits to institutional or semi-public organizations. The Forest Service believes that each entity should have the type of permit that best fits its mode of operation. Some of the largest outfitting and guiding operations are run by non-profit entities. They are not eligible for a land use fee waiver when they are operating as a commercial entity.

*Comments.* One respondent supported authorizing priority use for up to 10 years at the discretion of the Forest Service, on the grounds that a longer term supports a positive business environment for organizations committed to long-term programs in specific areas and whose enrollment depends upon significant amounts of advance program planning and consistency.

One respondent disagreed with the agency's recent extension of priority use permit terms from up to 5 years to up to 10 years. Several respondents believed that 5 years is a more appropriate maximum permit term that would give land managers more discretion in properly managing the resource and accomplishing agency objectives and that 10 years is too long a term. One respondent stated that as permit terms are extended, the revocation process needs to be strengthened, simplified, and shortened. One respondent objected to longer terms.

*Response.* The revised maximum term length for priority use permits was published in the **Federal Register** as a proposed directive on August 13, 2004 (69 FR 50160). The final **Federal Register** notice adopting the 10-year permit term was published on April 14, 2005 (70 FR 19727). The agency did not propose changing the maximum term for priority use permits in these directives. The process for revoking permits is governed by the APA and 36 CFR 251.60 and is also beyond the scope of these directives.

*Comments.* One respondent supported a 2-year probationary period, so that an outfitter and guide who does not provide adequate public service, protect resources, or support the agency's objectives will lose the privilege to operate. Another respondent agreed and stated that it is harder to take away an allocation than not to issue one. One respondent suggested using the phrase ''2-year interim priority'' in proposed section 41.53k, paragraph 3. Several respondents suggested an option to extend the permit for 10 rather than 8 years because new holders may need more time to establish their business. One respondent suggested that more explicit direction be provided when a permit is issued upon change of ownership. This respondent wanted clarification that a new permit would be subject to the 2-year probationary period if the purchaser was a new operator.

*Response.* The Forest Service had two objectives in proposing the 2-year plus 8-year term for new operators: To overcome the agency's inertia in converting eligible holders from an annual permit to a priority use permit, and to use the same timeframe (10 years) for evaluating environmental impacts when authorizing the use. The Forest Service disagrees with the notion that a 2-year plus 10-year term should be offered because it would not meet the standard horizon for analyzing the use. The Forest Service does not believe it is necessary to create a new term, such as ''interim priority use,'' to refer to the probationary period. A new holder will simply have priority use for a 2-year probationary period.

*Comments.* One respondent stated that upon termination, priority use permits should be competitively bid by other prospective holders to allow for competition. One respondent wanted to revise proposed section 41.53k, paragraph 10, to provide that priority use permits may be reissued to the original holder, provided that the permits are consistent with the applicable land management plan and there has been satisfactory performance. One respondent believed that priority use permits should be renewed only if the unguided public does not need access. One respondent believed that renewal at the sole discretion of the authorized officer could be a biased decision and proposed striking ''at the sole discretion of the authorized officer.'' This respondent also wanted to strike the citation to the cost recovery regulations at 36 CFR 251.58. One respondent supported retaining proposed section 41.53k, paragraphs 6 through 10, as written.

*Response.* Long-standing agency policy and permit terms provide for reissuance of priority use permits if the holder has satisfactory performance and issuance to the purchaser of ownership of or a controlling interest in the holder's business if the purchaser is technically and financially qualified. The agency has not proposed revising this policy in these terms in these directives.

The Forest Service is retaining the citation to the cost recovery regulations, which are beyond the scope of these directives. Outfitting and guiding applications and permits are exempt from cost recovery, unless they take more than 50 hours to process or monitor.

*Comments.* One respondent believed that priority use permits have monetary value because of their allocation of use and access rights and that the agency should be able to prevent the sale of those rights. One respondent disagreed with the assertion in proposed section 41.53k, paragraph 7b, that a permit is not real property. This respondent believed that this statement was inconsistent with a finding by the Internal Revenue Service (IRS). One respondent stated that he purchased an outfitting and guiding permit at an IRS tax auction and that the Forest Service allowed the auction to take place, thereby acknowledging that outfitting and guiding permits are real property. Several respondents wanted to revise proposed section 41.53k, paragraph 4, to provide appeal rights for performance ratings.

*Response.* Forest Service special use permits are not real property and are not transferable (36 CFR 251.59). They are a license to conduct a business on NFS lands. While an outfitting and guiding business may be sold, an outfitting and guiding permit may not, per current Forest Service directives at FSH 2709.11, section 41.53f, paragraph 4. This provision remains in the final directives at section 41.53l, paragraph 7b. Purchasers of an outfitting and guiding business must apply for and obtain a permit.

41.53m—Allocation of Use for a Priority Use Permit

In the proposed directives, this section was numbered as 41.53l.

*Comments.* Several respondents supported the agency's intent to allocate use efficiently, particularly given that service days can go unused for years, while many potential operators are unable to obtain the allocation that they need. Several respondents supported the requirement to return unused service days, thereby increasing the availability of service days for reallocation to those who will make use of them. These respondents believed that the proposed directives would potentially open up use in areas that are not available under current management practices and would be helpful to holders who consistently use and pay for allocated use. One respondent supported optimum utilization of service days and redistribution of use when outfitters and guides under-perform by some reasonable margin.

One respondent proposed adjusting allocations annually instead of once every 5 years, so that unused service days or quotas could be made available to small local livery and recreational supply businesses that cater to the public. One respondent stated that use should be adjusted annually, instead of every 5 years, to allow unused service days to be made available for use by the unguided public. This respondent recommended dropping proposed section 41.53l, paragraph 2a. This respondent also recommended that use be reallocated on a first-come, first-served basis through a lottery system, a common pool, or some other method that would give access to unguided recreation. Another respondent was concerned that proposed section 41.53l would encourage holders to report more than their actual use and that surplus use would not be made available to the unguided public.

One respondent questioned whether reallocation of use would be based on holders' overall use or on their use in each authorized area or for each authorized activity and recommended that reallocation be based on the highest percentage of use from among the authorized areas or activities during the last 5 years. Several respondents suggested evaluating use over a 10-year rather than a 5-year period, since after a major wildfire or other natural disaster, it takes longer than 5 years to return to previous levels of use. One respondent objected to review of priority use every 5 years. One respondent recommended that the utilization rate be negotiated with priority use permit holders who operate in remote areas. Several respondents suggested that extenuating circumstances, such as a natural disaster, a reduction in consumer confidence, increased placement of group bookings (which are subject to change or cancellation), or a variation due to weather in the length of the operating season, should be taken into account in reviewing priority use. One respondent suggested that extenuating circumstances exempt priority use

permit holders from review and redistribution of allocations of use.

One respondent was concerned that the effort to reallocate unused priority use could create an anti-growth environment and untenable business conditions for priority use permit holders. One respondent was concerned that review of priority use would require additional Forest Service resources.

Several respondents recommended revising proposed section 41.53l, paragraph 3, to provide for maintaining, increasing, or decreasing priority use allocations at the time of renewal, provided that any change to the allocations be consistent with the applicable land management plan, applicable project decision, or other appropriate analysis.

Many respondents were concerned that the proposed directives would require a reduction in allocation to priority use permit holders who are in compliance with their permits. One respondent believed that a reduction of service days would cause businesses to close. Several respondents observed that the proposed directives would not provide for returning service days to holders. Several respondents suggested that instead of requiring service days to be taken from priority use permit holders, the directives should allow them to contribute service days to a pool voluntarily without losing them. One respondent suggested that holders who contribute service days to the pool should get them back if they use them for 2 out of 10 years. One respondent observed that the proposed directives would result in a one-way decline in service opportunities for quality, long-term holders.

Many respondents were concerned that priority use permit holders would be required to use all or nearly all of their allocated use once in a 5-year period to avoid a reduction in their allocation. These respondents stated that it is impossible to achieve a 100 percent utilization rate in the tourism industry and that therefore it would be unlikely that holders could recover lost service days. These respondents stated that the tourism industry books at 100 percent to achieve a 75 to 85 percent utilization rate and that average hotel occupancy in the United States is approximately 65 percent of capacity. One respondent noted that to achieve 100 percent of capacity, most businesses in the tourism industry have to overbook in peak periods and that this practice is not allowed by Forest Service directives and land management plans. In addition, these respondents believed that utilization would always be below 100 percent because of fluctuation in the business climate, weather, game populations, snow pack, drought, and wildfires. Several respondents believed that even after adding a 10 percent cushion, allocations would be reduced because of the difficulty of obtaining the required utilization rate. Other respondents cautioned against including shoulder seasons, when there is inconsistent demand, and other periods when the permitted activity is infeasible in the utilization calculation. One respondent recommended that the 100 percent utilization requirement apply only to the peak season.

Several respondents requested that allocations not be reduced unless holders' utilization falls significantly below the average utilization for other holders providing the same services in the same use area during the peak season. These respondents recommended that the utilization rate and the peak season should be established in consultation with holders in each use area. These respondents also recommended that review of priority use be suspended when economic or environmental factors have seriously compromised the ability of holders to attract business.

Several respondents believed that a 70 percent utilization rate should be required to avoid a decrease in allocation of use. One respondent suggested that if permit holders are not able to meet the 70 percent threshold, they should be required to renegotiate the number of approved service days with the Forest Service. Another respondent stated that a 75 percent utilization rate for 1 out of 5 years was achievable. One respondent supported the 10 percent buffer on the utilization rate for large allocations, as the buffer would likely be adequate to account for temporary increases in bookings. This respondent believed that for small allocations, a buffer of 15 to 20 percent would be necessary to accommodate periodic fluctuations. Another respondent suggested a 10 percent buffer in addition to a 70 percent utilization rate.

One respondent observed that if holders have an 80 percent utilization rate, their use should not be cut 10 percent. One respondent believed that the utilization rate should be the highest amount of actual use in the last 5 years plus 20 percent. Another respondent recommended a utilization rate of actual use plus 35 percent.

Several respondents suggested adding 10, 15, or 20 percent to allocations for holders who have a 100 percent utilization rate. One respondent suggested removing the limitation in the proposed directives that the new allocation not exceed the old one, so as to accommodate growth in public demand. This respondent suggested increasing holders' allocations by 20 percent if there is additional demand and they have a 100 percent utilization rate for 2 or more of the past 5 years. One respondent recommended allowing qualifying holders to remedy the reduction in use by fully utilizing their allocation during a reasonable period.

One respondent suggested that reductions in allocations of use be subject to administrative appeal.

*Response.* The Forest Service agrees that holders should not be allowed to retain service days or quotas they do not need. Additionally, the agency agrees that it is appropriate to provide a margin above actual use in deciding whether to adjust allocations, given the effects of fluctuations in the business climate, weather, game populations, wildfires, and natural disasters. Consequently, the final directives provide that for permits with more than 1,000 service days or the equivalent in quotas, holders can retain their highest use in 1 year during the past 5 years, plus 15 percent of that amount, provided that the total does not exceed the allocation when the permit was issued. For permits with 1,000 service days or less or the equivalent in quotas, holders can retain their highest use in 1 year during the past 5 years, plus 25 percent of that amount, provided that the total does not exceed the allocation when the permit was issued. Smaller entities, which have smaller allocations, need a bigger margin because they do not have the economies of scale available to larger entities.

Original allocations are based on requisite analysis. Any amount of use that a holder proposes to add above the original allocation would be considered a new proposal and would require environmental analysis.

The directives do not preclude overbooking. Holders may not exceed their allocation of use, but overbooking is a management decision. While 100 percent utilization of an allocation may be difficult for some operations, the agency disagrees that 100 percent utilization of an allocation is impossible. Experience shows that many holders fully utilize their allocations.

A reduction in an allocation of use would be appealable under 36 CFR part 251, subpart C.

The Forest Service believes that the customized limitations on and waivers of allocation adjustments suggested by respondents would not be affordable to administer. Additionally, these

proposed revisions would result in inconsistent treatment of similarly situated entities. Therefore the agency is not adopting these proposed revisions.

*Comments.* One respondent suggested provisions to mitigate the effects of the proposed directives on priority use permit holders, including allowing them to apply for a permit amendment to increase their allocation prior to implementation of the final directives; allowing Forest Service officials to approve requests to increase priority use allocations for operators with acceptable ratings, when consistent with the applicable land management plan; and providing for increases in allocations when holders use 100 percent of their allocation.

*Response.* The Forest Service does not believe that there is any need to mitigate effects of the final directives on priority use permit holders. Priority use permit holders may apply for an amendment to their permit at any time. Applications are evaluated in accordance with applicable laws, regulations, directives, and land management plans and requisite analysis. Allocations of use and adjustments to allocations of use are made in accordance with directives and applicable land management plans and requisite analysis. The agency believes that the determination of whether to allocate additional use and how much use to allocate for priority use permit holders should be informed by a needs assessment.

*Comments.* One respondent stated that the requirement to request and obtain approval of non-use in current section 41.53h, paragraph 4, should be retained. Another respondent recommended eliminating the requirement. This respondent stated that the requirement does not result in efficient use of allocations and takes too much time to administer.

*Response.* The Forest Service agrees that requests for and approval of non-use should be eliminated. The process for approval of non-use is costly to administer. In the final directives, the agency has replaced this process with the criteria for adjusting allocations of use.

*Comments.* One respondent suggested revising proposed section 41.53l, paragraph 2, to provide for review of actual use on a monthly basis, taking an average of all months, annually adjusting the allocation of use to the average seasonal use, and shifting all unused service days or quotas to the unguided public. This respondent recommended eliminating proposed section 41.53l, paragraphs a and b, which provided for review of use before renewal, and instead reallocating the use to a common pool for unguided and guided recreational use or reserving it until a capacity analysis shows that recreational demand of the unguided public has been met.

*Response.* The Forest Service believes that it would be too costly and is not necessary to review use monthly. Long-standing Forest Service policy in current section 41.53f, paragraph 3, addresses renewal of outfitting and guiding permits. In the final directives, this provision is located in section 41.53l, paragraph 4. A needs assessment is conducted to determine how much commercial use is appropriate. Unguided use is not allocated by the Forest Service.

*Comments.* One respondent stated that the value of an outfitting and guiding business is directly tied to the number of service days it is allocated under a permit and that the value of the business diminishes when the agency reduces the number of service days allocated. One respondent stated that when the respondent bought two outfitting and guiding businesses, the banks wanted to know exactly how many service days would be allocated to the businesses to determine cash flow and business value. This respondent noted that outfitters and guides report false numbers to protect their service days and that it is better to pay for unused service days than to lose those days and incur devaluation of their business.

*Response.* An allocation of use is a privilege that may be lost through non-use. Allocations of use are not determinative of past and future earnings; rather, allocations of use are only one aspect of past and future earnings. In addition, under the existing and final directives, an outfitting and guiding permit is not real property, does not convey any interest in real property, and may not be used as collateral for a loan. FSH 2709.11, sec. 41.53f, para. 4a(3) in the current directives and sec. 41.53l, para. 7b, in the final directives.

*Comment.* One respondent suggested that proposed section 41.53l, paragraph 1, recognize that Section 802(2) of the Alaska National Interest Land Conservation Act (ANILCA) establishes a policy of giving preference to subsistence uses over other uses on NFS lands in the State of Alaska.

*Response.* The Alaska Region of the Forest Service has issued a regional supplement to FSH 2090.23, which addresses the provisions of Section 802(2) of ANILCA generally in the context of Forest Service programs in the State of Alaska. Therefore, the Forest Service does not believe that it is necessary to address Section 802(2) of ANILCA in the national outfitting and guiding directives.

*Comment.* One respondent believed that by offering the same terms and conditions to educational and institutional permit holders as to other types of permit holders, the proposed directives would give thousands of young people easier access to Federal lands. This respondent believed that priority use permits facilitate greater business continuity, consistency, and longer-term business plans for youth organizations.

*Response.* The Forest Service agrees that it is appropriate to offer priority use permits to educational and institutional outfitters and guides and has done so in the final directives.

41.53n—Management of Priority Use Pools

This section is new and was added in response to comments.

*Comments.* Several respondents observed that the proposed directives require drawing from the allocation of priority use permit holders to stock temporary use pools and that there is no way under the proposed directives to recover these lost service days.

Several respondents observed that priority use permit holders need additional service days to expand their businesses and requested additional direction regarding how they could increase their allocation if service days are available other than through the permit renewal process.

Many respondents suggested that pools be established or existing pools be maintained for priority use permit holders and that the final directives establish guidance for priority use pools, rather than assigning all available service days to a temporary use pool. Many respondents recommended that unused service days from priority use permits or service days from revoked or expired priority use permits be assigned to a priority use pool for a variety of purposes, including meeting the short-term needs of priority use permit holders during a season with heavy demand; meeting long-term needs of priority use permit holders by allowing them to expand their businesses; and allowing a permit holder who lost service days after an allocation adjustment to recover. One respondent proposed the use pool for the Bob Marshall Wilderness Area, which is stocked with voluntary, temporary contributions from priority use permit holders, as a model for national priority use pools.

One respondent suggested that unused service days be divided equally between temporary and priority use

pools. One respondent recommended that the agency establish a priority use pool on each administrative unit to allow for flexibility in and growth of holders' businesses.

One respondent observed that river outfitters and guides who have priority use permits also have recurring temporary use and that temporary use permits aid priority use permit holders in handling fluctuations in business. Several respondents observed that state hunting licenses are allocated by lottery and that hunting outfitters risk losing use due to circumstances beyond their control, such as state limitations on licenses for certain hunts. One respondent believed that a pool for outfitted hunts would be useful and that any licensed hunter who decides to contract with an outfitter should be eligible to apply for use from the pool. This respondent also observed that outfitters should not be restricted to specific geographical areas (such as a hunt management unit) because this type of restriction might drive up prices.

Several respondents did not want to lose existing use pools. They stated that existing pools of surplus service days are shared by priority use permit holders. Another respondent observed that existing use pools would be eliminated under the proposed directives unless they are included in a land management plan. Several respondents observed that priority use permit holders currently contribute to pools that they can use and that institutional outfitters and guides have a separate use pool.

Several respondents believed that outfitters and guides would not voluntarily relinquish use if it would be permanently lost.

One respondent recommended allowing priority use permit holders to apply for use from a temporary use pool more than 30 days in advance.

*Response.* The Forest Service agrees that the management of priority use in some situations would benefit from establishment of priority use pools and accordingly has added section 41.53n, Management of Priority Use Pools, in the final directives. Under this section, the authorized officer may establish a priority use pool when it would benefit management of outfitting and guiding. When a priority use pool is established, it will be stocked by allocating service days based on a resource capacity analysis demonstrating that additional capacity exists; a determination that service days or quotas have not been used during the first 5 years of a priority use permit; or a determination that service days or quotas may be reallocated when a priority use permit is revoked or not renewed. The authorized officer may establish application and operating procedures for the pool, such as creation of an open season for short-term allocations. Additionally, this new section provides that once short-term needs have been met and when supported by a needs assessment and capacity analysis, the authorized officer may increase allocations for priority use permit holders or issue new priority use permits. Furthermore, this new section provides that the authorized officer may shift use between temporary and priority use pools based on their utilization.

The Forest Service does not believe that the amount of use assigned to temporary and priority use pools should be predetermined. Rather, the agency believes that this decision should be informed by a needs assessment.

Under section 41.53k of the final directives, priority use permit holders outside the use area may compete for use from a temporary use pool during the open season. Priority use permit holders inside the use area may compete for use from a temporary use pool after the end of the open season, provided that if a priority use pool has been established for the same use area, applications for any remaining temporary service days may be restricted to qualified applicants who do not hold a priority use permit in the use area.

Existing use pools adopted pursuant to formal decisions will remain in effect after issuance of the final directives. However, they must conform to these directives.

While holders may voluntarily contribute use to a pool, voluntary contributions will not change how the agency will review utilization of their allocation.

The Forest Service agrees that pools are a good management tool for meeting the needs of hunting outfitters who have little control over whether their clients will draw a license in a lottery.

41.53o—Reduction of Use Based on New or Changed Decisions

In the proposed directives, this section was numbered as 41.53m.

*Comments.* One respondent supported proposed section 41.53l (section 41.53m in the final directives) as written. One respondent believed that allowing holders to retain the highest amount of actual use in a 5-year period plus 10 percent of that amount would commit the Forest Service to growth, even if it is inappropriate. One respondent suggested revising proposed section 41.53m to change the title and the text to address both increases and decreases in use. This respondent suggested adding a paragraph stating that use may be increased when capacity analysis or other assessments indicate the availability of increased capacity. Several respondents suggested revising proposed section 41.53m, paragraph 3, to qualify that use would be allocated through issuance of a prospectus only when existing holders have sufficient use to sustain their operations, the amount of new capacity is sufficient to sustain a new permit holder, and there is competitive interest. Additionally, these respondents suggested following the direction in proposed section 41.53l, paragraphs 1 through 4, governing allocation of use for a priority use permit, if appropriate. Yet another respondent proposed that reductions in use based on new or changed decisions be mandatory and stated that when reductions are needed, the agency has the authority to reduce use. One state agency encouraged voluntary reduction of use to address game resource management needs.

*Response.* This section replaces section 41.53i in the current directives and has the same purpose, that is, to establish a procedure for reducing allocations of use when they are no longer consistent with the applicable land management plan or project decisions implementing the plan. The Forest Service agrees that voluntary reductions are desirable. However, if permit holders will not voluntarily reduce use, it may be necessary for the Forest Service to impose proportionate reductions in use or, when the amount of remaining use will not support the number of existing holders, to select among those holders through a competitive process. Increases in use or new capacity are beyond the scope of this section.

41.53p—Transitional Priority Use.

This section is new and was added in response to comments.

*Comments.* One respondent observed that annual renewal of an institutional permit was cumbersome for both the holder and the Forest Service and welcomed the prospect of obtaining a priority use permit. Several respondents suggested creating an interim temporary use permit that could be authorized for consecutive 1-year terms for up to 5 years, that would not be limited in the amount of use that could be assigned to the permit until conversion to priority use status, and that could be reissued if necessary. These respondents suggested that outfitters and guides with satisfactory performance and eligibility for priority use under the current

outfitting and guiding directives routinely qualify for an interim temporary use permit. One respondent recommended modifying proposed section 41.53j, paragraphs 4 and 8, to add the phrase ''or interim temporary permit'' so that interim temporary permits would not be subject to renewal and that the use they authorized would be returned to a common pool.

Several respondents supported conversion from temporary use under the current directives to priority use. However, these respondents believed that there was no affordable mechanism for the conversion. One respondent recommended that the directives provide a reasonable period for applications for new or modified special use permits. Several respondents observed that needs assessments, resource capacity analyses, and NEPA compliance required for the conversion were costly, that these costs would all be passed on to permit holders through cost recovery, and that these costs would be beyond the financial capacity of many small businesses and organizations. These respondents believed that cost recovery would make conversion from temporary to priority use unaffordable for many temporary use permit holders.

*Response.* The Forest Service agrees that more direction should be provided for conversion from temporary to priority use. Therefore, the agency has added section 41.53p, Transitional Priority Use, to the final directives. This section provides that holders of temporary use under the current directives are eligible for reclassification of their use as transitional priority use when their use is active and recurring; their performance has been satisfactory; they request reclassification within 1 year of the date of publication of these final directives; and they agree to meet the application requirements for conversion to priority use within 5 years of the date of their request.

Section 41.53p, paragraph 5, in the final directives describes how the allocation will be determined for transitional priority use. When transitional priority use permit holders apply for conversion to priority use, their allocation will be based on their highest amount of actual use in 1 year during the past 5 years, plus 25 percent of that amount if their allocation was 1,000 service days or less or 15 percent of that amount if their allocation was for more than 1,000 service days.

Section 41.53p, paragraph 8, in the final directives provides that for those holders who elect conversion in a timely manner, the needs assessment and capacity analysis necessary to determine whether the priority use may be authorized will be considered programmatic costs and will not be subject to processing fees. Thus, for cost recovery purposes, the agency's costs for converting transitional priority use to priority use will be based on an estimate of the costs associated with reviewing the application and conducting the environmental analysis necessary to issue a priority use permit for the first time. Environmental analysis costs associated with outfitting and guiding permits for two national forests ranged from $120 to $8,750. We estimate that these costs will typically be $1,200. Additionally, these costs could be spread over 5 years if necessary. The typical estimated cost of $1,200 is comparable to the average cost of $950 for processing applications for all types of special uses established in a 1995 nationwide study. Adjusted for inflation the typical average cost would be $1,345. Applicants may spread these costs over 5 years, if necessary. Annual costs for conversion from transitional priority use to priority use are estimated to range from $24 to $1,750 per entity. Thus, the average annual cost is $269 per entity.

41.53q—Administration of Outfitting and Guiding Permits

In the proposed directives, this section was numbered as 41.53n.

*Comments.* One respondent commented that proposed section 41.53n did not address how permits with service days on multiple Ranger Districts would be administered and suggested that they should be administered by one Ranger District only.

Several respondents suggested that the findings from inspections be subject to administrative appeal. One respondent suggested that termination of permits be subject to administrative appeal because termination is based on findings from field inspections that need to be subject to objective review. One respondent suggested that the directives provide at least 90 days between performance evaluations and ratings to allow holders to take corrective action.

One respondent proposed that the directives require all commercial users to abide by the same leave-no-trace standards that apply to noncommercial users. One respondent suggested that proposed section 41.53n, paragraph 4, regarding imposition of an immediate suspension of a permit to protect public health and safety or the environment, reference fish and wildlife specifically as an integral part of the environment.

*Response.* When an outfitting and guiding permit covers use on multiple Ranger Districts, the Forest or Grassland Supervisor has the option of assigning permit administration to the supervisor's office or assigning a lead Ranger District pursuant to FSM 2704.33 and 2704.34.

Findings from inspections are not written decisions of the authorized officer and are therefore not appealable under 36 CFR part 251, subpart C. However, the performance rating based on those findings is a written decision of the authorized officer relating to administration of a permit and is therefore subject to administrative appeal. While revocation of a permit is appealable pursuant to 36 CFR 251.60(a)(2)(ii), termination of a permit is not appealable pursuant to 36 CFR 251.60(a)(2)(iii).

The Forest Service disagrees that the time provided to take corrective action should be fixed at 90 days. The authorized officer needs to have discretion to determine the appropriate amount of time to take corrective action, based on case-specific circumstances.

The authorized officer has discretion to require compliance with leave-no-trace standards. These types of requirements are usually addressed in the operating plan, which covers day-to-day operations.

Consistent with Forest Service regulations at 36 CFR 251.60(f), the final directives state that an immediate suspension may be imposed on all or part of a permit to protect public health and safety or the environment. The agency believes that the term ''environment'' is broad enough to include fish and wildlife.

41.53r—Administration of Priority Use Permits

In the proposed directives, this section was numbered as 41.53o.

*Comments.* One respondent observed that proposed section 41.53o would give unfettered discretion to authorized officers. One respondent was concerned that the agency would not be able to conduct an annual review of each permit holder's operation, given the agency's limited resources, and did not want the agency to establish a requirement that could not be met. This respondent observed that competitive issuance of a permit and reissuance of a priority use permit depend on the holder's past performance and that it is therefore critical for the agency to complete performance evaluations. One respondent suggested conducting performance evaluations of transitional priority use permit holders and adding professional associations to the list of

consultants in proposed section 41.53o, paragraph 3.

*Response.* The agency believes that authorized officers need discretion in administering priority use permits. Performance reviews are necessary to establish performance ratings, which serve as the basis for determining whether enforcement action is necessary and whether a priority use permit may be reissued.

The agency agrees that performance reviews are important in competitive offerings. Competitive offerings are typically used for priority use permits, which are subject to performance reviews. The agency also agrees that performance reviews are important for transitional priority use permit holders and has therefore included a requirement for performance evaluations for transitional priority use permit holders in section 41.53p, paragraph 4, of the final directives. The Forest Service does not believe that it is necessary to conduct performance evaluations for temporary use permit holders, especially as temporary use will no longer be a stepping stone to priority use. The Forest Service does not believe that it is appropriate to consult professional associations when performance standards are established, as doing so could raise concerns under the Federal Advisory Committee Act.

FSH 2709.11, Section 37.21b, Flat Fee for Temporary Use

*Comments.* A number of respondents commented on the amount of the flat land use fee for temporary use. Several stated that the proposed fee was too high because it did not accurately reflect outfitting and guiding revenue, while others stated that the proposed fee was too low.

One respondent commented that the proposed flat fee for temporary use should not be based on gross revenue.

Some stated that the fee should be waived for non-profit entities, while others were concerned that non-profit entities would be given an unfair advantage if the fee were waived and believed that the standard fee policy should apply to all outfitters and guides. One respondent stated that the Forest Service should not establish a flat fee schedule for temporary use without changing other outfitting and guiding fees because the different fee structure for the same activities would likely result in unfair competition. Some respondents noted that non-profit status does not denote noncommercial status or eligibility for a fee waiver. One respondent stated that priority use outfitters and guides should pay the same fee as temporary use outfitters and guides.

One respondent suggested increasing the number of service days covered by the flat fee.

*Response.* The Forest Service has several objectives in establishing a flat land use fee for temporary use permits. First, the land use fees for these permits need to be sufficient to cover the cost of administering them. To meet that objective, the agency needs to reduce the administrative cost of calculating the fees. Applications for these permits will typically be exempt from cost recovery because they will involve 50 hours or less to process. However, the agency estimates that it will cost from $236 to $512 to screen a temporary use proposal and to issue and administer a temporary use permit under the final directives. Under the final directives, the agency is likely to collect less in fees than it costs to issue permits with up to 100 service days and to collect more than it costs to issue permits with up to 200 service days.

Second, the temporary use permit system is intended to increase access to NFS lands; fees for those permits should not be higher than necessary so as to encourage participation in the program. Like land use fees for priority use permits, the flat fee schedule is based on 3 percent of gross revenue. The flat fee of $150 for up to 50 service days was determined by multiplying 50 service days by $100, which is a typical service day charge, and multiplying the product by 3 percent (i.e., $50 \times \$100 = \$5{,}000$; $\$5{,}000 \times .03 = \$150$). Holders of a temporary use permit will pay a lower fee than under the current directives if their service day charge exceeds $100 or a higher fee if their service day charge is less than $100.

In most contexts, gross revenue is an appropriate basis for calculating the value of special use privileges. Generally, the gross revenue of a business conducted on NFS lands is an accurate reflection of the value of the business's use of those lands, regardless of whether the business involves improvements on NFS lands. Gross revenues derived from use or occupancy of NFS lands are an accurate indicator of the value of that use or occupancy because generation of the income depends on use of NFS lands: without them, the business would not exist. This conclusion is supported by the 1996 Government Accountability Office (GAO) report, ''Fees for Recreation Special-Use Permits Do Not Reflect Fair Market Value,'' which compares land use fees for outfitting and guiding based on a percentage of gross revenue that are charged by the Forest Service with land use fees for outfitting and guiding based on a percentage of gross revenue that are charged by the State of Idaho (GAO Report, RCED–97–16, at 7 (Sept. 1996)).

Third, the flat fee should be based on the market value of the authorized use. Consequently, the Forest Service does not believe that fees for non-profit entities should be waived. The outfitting and guiding program serves both for-profit and non-profit entities. Non-profit outfitters and guides are providing commercial services (36 CFR 251.51). Some of the largest outfitters and guides operating on NFS lands are non-profit entities. Waving fees for non-profit entities would give them an unfair advantage.

*Comment.* One respondent stated that the agency must clarify FSH 2709.11, section 37.21c, paragraph 2, Fees for Commercial Use for Non-Profit Organizations, and section 37.21k, Fees for Commercial Use for Educational Institutions.

*Response.* FSH 2709.11, sections 37.21c and 37.21k, were not proposed for revision and are beyond the scope of these directives.

*Comment.* One respondent stated that the proposed directives appear to conflict with the flat fee policy for outfitting and guiding land use fees being developed in the Alaska Region, since under the proposed directives, outfitters and guides in the Alaska Region will pay fees for temporary use based on a percentage of their gross revenues. This respondent wondered whether the national directives or the regional directives would apply to temporary use in the Alaska Region.

*Response.* Land use fees for outfitting and guiding permits in the Alaska Region will be determined by the Alaska Region's flat fee policy.

FSM 2713.1—Liability and Insurance

*Comments.* Some respondents commented that the proposed insurance standards were reasonable and were industry standards.

A number of outfitters and guides were concerned about the Forest Service's proposed classification of levels of risk. These respondents stated that the definitions of low, medium, and high risk were arbitrary, confusing, and untenable and that these classifications would unfairly penalize quality operators and unnecessarily limit public access to activities deemed to be higher risk. These respondents believed that risk should be determined by a holder's historical safety record, current risk management plan, and level of training. Some respondents were concerned that their outfitting and guiding activities might be characterized as high risk by

the agency. Some respondents were concerned that the Forest Service would impose unreasonable liability insurance requirements and thus increase the cost of insurance premiums. Some respondents believed that Forest Service personnel do not have the expertise to set insurance limits and that minimum liability insurance levels should be set by the market for the industry involved, the degree of risk assessed by an insurance carrier, and the amount of exposure for the holder's business. One respondent stated that hunting outfitters should not be required to carry more than $500,000 in insurance coverage.

Some respondents stated that allowing Regional Foresters and Forest Supervisors to increase coverage amounts could result in too much variation among administrative units. One respondent suggested that the directives state that liability limits may be adjusted based on the availability of coverage in the insurance market and the reasonableness of rates.

One respondent objected to dropping the requirement to provide proof of liability insurance for holders of temporary use permits, another respondent believed that insurance requirements for temporary use permits were unclear, and another respondent was concerned that temporary use permits might be held to a lower standard than priority use permits with respect to insurance.

Several respondents believed that the requirement for an endorsement for contracted services and equipment was unworkable and unaffordable and suggested that contractors obtain their own insurance coverage and certificate of insurance.

Some respondents stated that it is unclear why the agency requires a copy of an insurance policy and that a certificate of insurance should be sufficient. Some respondents stated that other large permit holders, besides the Boy Scouts of America should be able to file a single set of insurance papers with the Forest Service's National Insurance Center to lower administrative costs for the agency and to reduce the administrative burden for the field staff.

One respondent recommended requiring an occurrence policy, which covers all claims that arise while the policy is in effect, regardless of whether the claims are reported during that period, as that type of policy would provide better protection for the agency, outfitters and guides, and the guided public.

One respondent recommended clarifying that the list of activities with inherent risk is not exhaustive by stating ''activities, such as but not limited to * * * swimming, boating, skiing * * *.'' One respondent recommended revising the standard outfitting and guiding permit form, form FS–2700–4i, to reflect the inherent risk recognized in FSM 2713.1, paragraphs 1a, b, and c, because the language in clause IV.G of the permit subjects holders to strict liability.

Some respondents believed that it was appropriate for the Forest Service to be named as an additional insured and to be indemnified as required by permits. One respondent did not believe that permit holders should be required to indemnify the United States for its own gross negligence or willful misconduct. Several state universities stated that they could not agree to the indemnification requirement if it exceeds state tort liability limits.

One respondent stated that it is not feasible for holders to provide a safe operation, as required by the directives.

*Response.* The Forest Service has modified FSM 2713.1, paragraph 2d, by removing the level of risk chart and replacing it with an exhibit showing minimum coverage amounts for liability insurance by type of special use. Many concessionaires already meet these requirements, which are consistent with industry standards and which are already required in many regions of the Forest Service.

Under the final directives, as under the current directives, temporary use permit holders will be treated the same as priority use permit holders for purposes of insurance requirements.

The final directives give holders' contractors the option of procuring a separate insurance policy that covers their services and equipment and that names the United States as an additional insured.

The remaining comments on this section are beyond the scope of these directives, i.e., address provisions that were not proposed for revision. Regardless, the Forest Service believes it is appropriate for Regional Foresters to have discretion to increase minimum requirements for insurance coverage based on the market for activities conducted in their region.

The agency needs a copy of concessionaires' insurance policies to verify all aspects of coverage. Unlike other concessionaires, the Boy Scouts of America has a single set of insurance policies that covers its operations world-wide and therefore needs to file only one set of insurance papers. If other entities have a single insurance policy that covers multiple operations, they may submit the same policy for those operations.

The agency agrees that occurrence policies are preferable to claims-made policies. While claims-made polices are allowed, they may require additional endorsements, for example, providing for a 2-year extension for filing claims, to achieve sufficiency.

The text of FSM 2713.1 makes it clear that the list of inherent risks is illustrative, rather than exhaustive. The agency does not believe that form FS–2700–4i needs to be modified with regard to inherent risks, which are more appropriately addressed in an assumption of risk form provided by outfitters and guides to their clients. In addition, form FS–2700–4i does not impose strict liability in tort, i.e., liability without regard to negligence.

The agency agrees that it is appropriate to name the United States as an additional insured on concessionaires' policies and to require indemnification of the United States under special use permits. These requirements minimize the liability of the United States for permit holders' acts and omissions on NFS lands and for third-party claims associated with permit holders' use and occupancy of NFS lands. The Forest Service assumes responsibility for its own acts and omissions to the extent authorized by law. The Forest Service believes that states and state agencies can indemnify the United States under applicable law. Where states maintain that they cannot indemnify the United States beyond state liability limits, the Forest Service will agree to accept unconditional indemnification up to the state liability limits, supplemented by self-insurance or procured insurance that is sufficient to cover the assessed risk of the states' use and occupancy of NFS lands.

A key component of the Forest Service's mission is to address public health and safety on NFS lands. Therefore, the agency believes that it is appropriate to require concessionaires to operate safely on NFS lands.

*Response to Comments on the Regulatory Certifications in the Proposed Directives*

Environmental Impact

*Comments.* Several respondents believed that these directives had the potential for environmental impact, that the Forest Service should prepare an environmental assessment (EA) or environmental impact statement (EIS) prior to implementing the directives, and that failure to do so would violate NEPA and its implementing regulations.

*Response.* The Forest Service disagrees that issuance of these directives requires documentation of

environmental analysis in an EA or EIS. Pursuant to NEPA's implementing regulations, the Forest Service promulgated a series of categorical exclusions (CEs) from documentation in an EA or EIS, which are set forth in FSH 1909.15, section 31.12. The specific CE relied upon by the Forest Service in publishing both the proposed and final directives is ''rules, regulations, or policies to establish Service-wide administrative procedures, program processes, or instructions.'' Publication of the proposed and final directives falls squarely within this CE because the directives establish national policy, procedures, and direction for administration of the Forest Service's outfitting and guiding program. However, issuance of a permit under these directives may trigger the need for documentation of environmental analysis under NEPA on a case-by-case basis.

Regulatory Impact

*Comments.* One respondent stated that the agency did not conduct a Regulatory Flexibility Act analysis on the proposed directives. Another respondent stated that the proposed directives would negatively affect small businesses. Another stated that they would diminish opportunities for a number of small businesses and organizations. Another commented that the proposed directives would have a disastrous effect on rural economies. Another respondent stated that the proposed directives would be detrimental to the value and viability of existing permits.

One respondent stated that those outfitters currently operating all or a substantial portion of their business under temporary use permits would have their use automatically and immediately cut because existing temporary use permits would be invalidated and because temporary use would be limited to 100 service days, an amount that is less than what is currently available. One respondent stated that reduction of service days would cause businesses to close.

*Response.* There are three types of costs potentially incurred by small entities as a result of implementation of the final directives: (1) The cost of environmental analysis associated with the conversion from transitional priority use to priority use; (2) an increase in land use fees for temporary use permits; and (3) an increase in the cost of liability insurance. Based on the threshold Regulatory Flexibility Act analysis conducted by the agency, the agency has determined that the final directives will not have a significant effect on a substantial number of small entities.

With proration of the additional cost associated with conversion from transitional priority use to priority use, no transitional priority use permit holders will experience additional costs exceeding 5 percent of their projected annual gross revenue. Only 1.7 percent of all outfitting and guiding permit holders may experience additional costs equal to 5 percent of their projected annual gross revenue. Only 1.8 percent of all outfitting and guiding permit holders may experience additional costs exceeding 1 percent of their projected annual gross revenue, and less than 3.5 percent of all outfitting and guiding permit holders may experience additional costs of less than 1 percent of their projected annual gross revenue. Moreover, applications for approximately 70 percent of holders likely to be eligible for conversion from transitional priority use to priority use are likely to be exempt from processing fees. Finally, holders that are not exempt from processing fees may request a reduction of processing fees per 36 CFR 251.58(c)(1)(ii)(A).

The current minimum land use fee for an outfitting and guiding permit is $95. The new land use fee for temporary use permits will be $150 for up to 50 service days or the equivalent in quotas. The new land use fee represents an increase in $55 for temporary use permits authorizing the least amount of use. A $55 increase in fees is likely to represent 1.2 to 1.8 percent of annual gross revenue for a temporary use permit, which authorizes a small amount of use, and typically represents 5 to 20 business days for an outfitter or guide. Thus, the increase in fees will constitute a minor part of the business income.

Increasing the minimum amount of liability insurance coverage will not adversely affect small business because most outfitters and guides voluntarily carry, and several Forest Service regions already require minimum coverage consistent with the minimums required in the final directives, in accordance with industry practice.

**3. Summary of Revisions to the Directives**

*In General*

The Forest Service has reformatted and renumbered FSH 2709.11, section 41.53, in its entirety. The agency has expanded the number of sections from 12 to 18 (sections 41.53a through 41.53r).

*Objectives*

The Forest Service has added section 41.53b, paragraph 2, to facilitate greater participation in outfitting and guiding by organizations and businesses that work with youth and educational groups.

*Policy*

The agency has revised section 41.53c, paragraph 2, to state that permitted access routes and a definition for that term are included in section 41.53d. The agency has revised paragraph 3 for greater consistency with the Wilderness Act. The agency has added paragraph 7 to address consideration of applicable provisions in ANILCA regarding issuance and administration of outfitting and guiding permits in the Alaska Region.

*New Definitions*

The Forest Service has added the following definitions in alphabetical order in section 41.53d of the final directives:

*Ancillary Service.* A service that supports use authorized by an outfitting and guiding permit and that is provided by a party other than the holder or the holder's employees or agents. This definition clarifies what constitutes an ancillary service.

*Open Season.* A period specified by the authorized officer during which eligible applicants can apply for service days from a temporary or priority use pool. This definition clarifies how use in a temporary or priority use pool may be obtained.

*Permitted Access Route.* Any road or trail that a holder is authorized to use under an outfitting and guiding permit or operating plan for purposes of pedestrian, stock, or vehicular access. This definition clarifies that a permit may specify which access routes a holder may use.

*Priority Use Pool.* A pool of service days or quotas in a use area that may be:

1. Distributed seasonally to priority use permit holders in that use area and returned to the pool for redistribution during the next open season; or

2. Distributed for the term of a permit to increase use allocated under priority use permits or to establish use for new priority use permits. This definition clarifies the purpose and function of priority use pools.

*Temporary Use Pool.* A pool of service days or quotas in a use area that are reserved for short-term, non-recurring, seasonal distribution during an open season to qualified applicants who do not hold a priority use permit in that use area, and thereafter may be

distributed to all qualified applicants on a first-come, first-served basis. This definition clarifies the purpose and function of temporary use pools.

*Transitional Priority Use.* Interim redesignation of temporary use as classified under the Forest Service's June 12, 1995, outfitting and guiding policy (60 FR 30830), for holders who meet all the requirements in section 41.53p. This definition clarifies the agency's intent with regard to conversion of temporary use to priority use.

*Use Area.* Any geographical configuration, such as a Ranger Districts, a wilderness areas, Wild and Scenic River, or National Forest, that allows for efficient management of temporary and priority use pools. This definition clarifies that the authorized officer has the discretion to determine the appropriate geographical area for efficient management.

*Revised Definitions*

The agency has revised the following definitions to read as follows:

*Quota.* An allocation of use that is measured as the number of stock per trip, people at one time, trips per hour or per day, the number of launches per day, or other unit of measure other than a service day; that is consistent with applicable land management plan guidance; and that is established in a programmatic or project decision. The agency has modified this definition to be consistent with terminology used elsewhere in the final directives.

*Service Day.* An allocation of use constituting a day or any part of a day on National Forest System lands for which an outfitter or guide provides services to a client. The total number of service days is calculated by multiplying each service day by the number of clients on the trip. As worded originally, this definition would have erroneously calculated the capacity of an entire outfitted and guided trip, instead of defining a single service day.

*Temporary Use.* Short-term, non-renewable outfitting or guiding use that is authorized in increments of 50 service days, up to a maximum of 200 service days in a 180-day period. The agency modified this definition to be consistent with changes made to section 41.53j.

*Removed Definition*

The agency has removed the definition for incidental use and has replaced it with the definition for temporary use.

*Unchanged Definitions*

The agency is retaining the definition of transportation livestock in section 41.53c of the current directives and will not adopt the proposed term ''livestock use''. The remaining definitions in the proposed directives remain unchanged.

*Land Use Management*

The Forest Service has modified section 41.53e slightly. In paragraph 1a, the agency has deleted the following phrase: ''consider whether authorizing the activities would impede the Forest Service's ability to meet the recreational and other goals of the Wilderness Act.'' The agency has revised paragraph 2 to provide that resource capacity analysis may be conducted when monitoring demonstrates that impacts associated with the use may exceed desired conditions. The Forest Service has revised paragraph 2c to add the phrase ''and visitor use trends.''

*Applications*

The Forest Service has reversed the order of paragraphs 1 and 2 and has revised paragraph 1 of section 41.53h to state that proposals and applications to use and occupy NFS lands for outfitting and guiding shall be evaluated pursuant to 36 CFR 251.54 and FSM 2712. The agency has revised section 41.53h, paragraph 2, to clarify that applicants for priority use permits will use form SF–299 and that applicants for temporary use permits will use a new form, Application and Temporary Special Use Permit for Outfitting and Guiding.

*Operations*

The agency has revised section 41.53i, paragraph 5, to provide that the holder's contractor may provide a separate insurance policy that covers the contractor's services and equipment and that names the United States as an additional insured. The agency has redesignated the endorsement exhibit as 2713.1, exhibit 02.

*Special Uses Streamlining*

The agency has revised section 41.53j, Issuance of Temporary Use Permits, as follows:

Paragraph 1 clarifies that all temporary use will be authorized using the new form, Application and Temporary Special Use Permit for Outfitting and Guiding, and increases the number of service days that may be allocated for temporary use permits to 200.

Paragraph 2 provides that only 1 temporary use permit may be issued per 180 days.

Paragraph 3 was revised to clarify how permits will be issued non-competitively.

Paragraph 10 was renumbered as paragraph 5.

Paragraph 6 replaces proposed paragraph 12 and identifies the elements required in an operating plan for a temporary use permit.

Paragraph 7 replaces proposed paragraph 11 and directs authorized officers not to conduct performance evaluations for temporary use permit holders.

Paragraph 8 is new and provides for consideration of past performance in deciding whether to issue temporary use permits.

The agency has moved paragraphs in section 41.53j addressing operation of temporary use pools to new section 41.53k, Management of Temporary Use Pools. Section 41.53k in the final directives provides that the authorized officer may establish a temporary use pool and develop application and operating procedures for the pool. Paragraph 2 provides that the authorized officer may establish one or more open seasons to facilitate administration and equitable distribution of service days from the pool. Paragraph 2a provides that during an open season, qualified applicants other than holders of priority use permits in the use area may apply for service days from the pool. Paragraph 2b provides that once an open season ends, any use remaining may be distributed on a first come, first-served basis, including to priority use permit holders in the use area, provided that if a priority use pool has been established for the same area, applications for any remaining use may be restricted to qualified applicants who do not hold a priority use permit. Paragraph 2c provides that upon termination of a temporary use permit, all service days or quotas assigned to that permit will be placed in the temporary use pool for the use area. This provision replaces proposed 41.53j, paragraph 8. Paragraph 2d provides the basis for allocation of use to temporary use pools and matches the basis for allocation of use to priority use pools in section 41.53n of the final directives. Paragraph 2e provides that the authorized officer may shift service days and quotas between temporary and priority use pools based on their utilization.

The agency has redesignated section 41.53k in the proposed directives as section 41.53l in the final directives. Paragraph 1 clarifies that priority use may be authorized under a term permit, while temporary use may not. The other

paragraphs in this section remain unchanged.

The agency has redesignated section 41.53l, Allocation of Use for a Priority Use Permit, in the proposed directives as section 41.53m in the final directives. Paragraphs 2a and 3b revise the amount of use above actual use that a holder may retain as an allocation. Holders with 1,000 service days or less may retain the highest amount of use in 1 year during the past 5 years, plus 25 percent of that amount, provided that the total not exceed the allocation when the permit was issued. The agency has edited paragraphs 4, 4a, and 4b for clarity.

Section 41.53n, Management of Priority Use Pools, is new. This section provides for establishment of priority use pools and application and operating procedures for the pools at the authorized officer's discretion. Paragraph 1 addresses short-term allocations that will be returned to the pool at the end of the year. Short-term allocations must be authorized under a temporary permit using the new form, Application and Temporary Special Use Permit for Outfitting and Guiding. Paragraph 2 addresses distribution from the pool after short-term allocation requests have been met. Paragraph 3 provides the basis for allocating service days to a priority use pool. Paragraph 4 provides that the authorized officer may shift service days between temporary and priority use pools based on their utilization.

The agency has redesignated section 41.53m, Reduction of Use Based on New or Changed Decisions, in the proposed directives as section 41.53o in the final directives.

Section 41.53p, Transitional Priority Use, is new. This section provides that holders of temporary use under the current directives are eligible for reclassification of their use as transitional priority use when their use is active and recurring; their performance has been satisfactory; and they request reclassification of their use as transitional priority use within 1 year from the date of publication of the final directives. Paragraph 2 provides that reclassification of transitional priority use as priority use must be supported by a needs assessment, resource capacity analysis, or other pertinent analysis and is not guaranteed. Paragraph 3 provides that the permit may be extended annually each year until the application for reclassification is granted or denied. Paragraph 4 provides that performance evaluations will be conducted on transitional priority use holders. Paragraph 5 provides that the allocation for a transitional priority use permit will be determined by the highest actual use in 1 year during the last 5 years, plus 25 percent of that amount for permits with 1,000 service days or less or 15 percent of that amount for permits with more than 1,000 service days provided that the total may not exceed the highest amount of use allocated during that period. Paragraph 6 provides that a purchaser of a business that holds a temporary use permit is not guaranteed reclassification of transitional priority use as priority use. Paragraph 7 provides that if supported by a needs assessment, transitional priority use must be reclassified as priority use within 5 years of the date of the request. Paragraph 8 provides that the cost of a needs assessment and capacity analysis needed to determine whether transitional priority use may be reclassified will be considered programmatic and will not be subject to processing fees. Paragraph 9 provides that work associated with reclassification of transitional priority use as priority use that is subject to cost recovery fees may be covered by a major or master cost recovery agreement spanning more than 1 year, with fees spread over the term of the agreement. Paragraph 10 provides that if holders of a temporary use permit are ineligible for reclassification of their use as transitional priority use, their use will be reallocated to a temporary use pool upon expiration of their permit.

*Permit Administration*

The agency has redesignated section 41.53n, Administration of Outfitting and Guiding Permits, in the proposed directives as section 41.53q in the final directives.

The agency has redesignated section 41.53o, Administration of Priority Use Permits, in the proposed directives as section 41.53r in the final directives. Additionally, the agency has modified paragraph 1 to clarify that temporary use may not be authorized under a term permit.

*Flat Fees for Temporary Use Permits*

The agency has modified section 37.21b to extend the flat fee rate for up to 200 service days.

*Changes to the Insurance Directives*

The Forest Service has modified FSM 2713.1, paragraph 2d, by removing the level of risk chart and replacing it with an exhibit showing minimum coverage amounts for liability insurance by type of special use. The Endorsement for Contracted Outfitting and Guiding Services and Equipment has been renumbered as exhibit 02.

**4. Regulatory Certifications for the Final Directives**

*Environmental Impact*

These final directives will revise national policy governing administration of special use permits for outfitting and guiding. FSH 1909.15, section 31.12, paragraph 2 (57 FR 43180, September 18, 1992), excludes from documentation in an environmental assessment or environmental impact statement ''rules, regulations, or policies to establish Service-wide administrative procedures, program processes, or instructions.'' The agency has concluded that these final directives fall within this category of actions and that no extraordinary circumstances exist which would require preparation of an environmental assessment or environmental impact statement.

*Regulatory Impact*

These final directives have been reviewed under USDA procedures and Executive Order 12866, as amended by Executive Order 13422, on regulatory planning and review. The Office of Management and Budget has determined that these are not significant directives. These final directives cannot and may not reasonably be anticipated to lead to an annual effect of $100 million or more on or adversely affect in a material way the economy, a sector of the economy, productivity, competition, jobs, the environment, public health or safety, or State, local, or tribal governments or communities; create a serious inconsistency or otherwise interfere with an action taken or planned by another agency; raise novel legal or policy issues; or materially alter the budgetary impact of entitlements, grants, user fees, or loan programs or the rights or obligations of beneficiaries of those programs. Accordingly, these final directives are not subject to Office of Management and Budget review under Executive Order 12866, as amended by Executive Order 13422.

These directives have also been considered in light of the Regulatory Flexibility Act (RFA) (5 U.S.C. 602 *et seq.*). There are three types of costs potentially incurred by small entities as a result of implementation of the final directives: (1) The cost of environmental analysis associated with the conversion from transitional priority use to priority use; (2) an increase in land use fees for temporary use permits; and (3) an increase in the cost of liability insurance. Based on the threshold RFA analysis conducted by the agency, the agency has determined that the final directives will not have a significant

effect on a substantial number of small entities.

With proration of the additional cost associated with conversion from transitional priority use to priority use, no transitional priority use permit holders will experience additional costs exceeding 5 percent of their projected annual gross revenue. Only 1.7 percent of all outfitting and guiding permit holders may experience additional costs equal to 5 percent of their projected annual gross revenue. Only 1.8 percent of all outfitting and guiding permit holders may experience additional costs exceeding 1 percent of their projected annual gross revenue, and less than 3.5 percent of all outfitting and guiding permit holders may experience additional costs of less than 1 percent of their projected annual gross revenue. Moreover, applications for approximately 70 percent of holders likely to be eligible for conversion from transitional priority use to priority use are likely to be exempt from processing fees. Finally, holders that are not exempt from processing fees may request a reduction of processing fees per 36 CFR 251.58(c)(1)(ii)(A).

The current minimum land use fee for an outfitting and guiding permit is $95. The new land use fee for temporary use permits will be $150 for up to 50 service days or the equivalent in quotas. The new land use fee represents an increase in $55 for temporary use permits authorizing the least amount of use. A $55 increase in fees is likely to represent 1.2 to 1.8 percent of annual gross revenue for a temporary use permit, which authorizes a small amount of use, typically 5 to 20 business days. Thus, the increase in fees will constitute a minor part of the business's income.

Increasing the minimum amount of liability insurance coverage will not adversely affect small businesses because most outfitters and guides voluntarily carry, and several Forest Service regions already require, minimum coverage consistent with the minimums required in the final directives, in accordance with industry practice.

Based on the foregoing, the agency has determined that these final directives will not have a significant economic impact on a substantial number of small entities because the directives will not impose new record-keeping requirements on them; will not affect their competitive position in relation to large entities; and will not significantly affect their cash flow, liquidity, or ability to remain in the market.

To the contrary, the efficiencies and consistency to be achieved by the final outfitting and guiding directives will benefit small businesses that seek to use and occupy NFS lands by providing the potential for greater business continuity for outfitters and guides and by reducing the frequency of time-consuming and sometimes costly processing of special use applications. The benefits cannot be quantified and are not likely to substantially alter costs to small businesses.

*No Taking Implications*

The Forest Service has analyzed these final directives in accordance with the principles and criteria contained in Executive Order 12630 and has determined that the final directives will not pose the risk of a taking of private property.

*Civil Justice Reform*

These final directives have been reviewed under Executive Order 12988 on civil justice reform. Upon adoption of the final directives, (1) All State and local laws and regulations that are in conflict with the final directives or that will impede their full implementation will be preempted; (2) no retroactive effect will be given to the final directives; and (3) they will not require administrative proceedings before parties may file suit in court challenging their provisions.

*Federalism and Consultation and Coordination With Indian Tribal Governments*

The agency has considered these final directives under the requirements of Executive Order 13132 on federalism and has concluded that the final directives conform with the federalism principles set out in this executive order; will not impose any compliance costs on the States; and will not have substantial direct effects on the States, the relationship between the federal government and the States, or the distribution of power and responsibilities among the various levels of government. Therefore, the agency has determined that no further assessment of federalism implications is necessary.

Moreover, these final directives do not have tribal implications as defined by Executive Order 13175, entitled ''Consultation and Coordination With Indian Tribal Governments,'' and therefore advance consultation with tribes is not required.

*Energy Effects*

These final directives have been reviewed under Executive Order 13211, ''Actions Concerning Regulations That Significantly Affect Energy Supply, Distribution, or Use.'' The agency has determined that these final directives do not constitute a significant energy action as defined in the Executive Order.

*Unfunded Mandates*

Pursuant to Title II of the Unfunded Mandates Reform Act of 1995 (2 U.S.C. 1531–1538), the agency has assessed the effects of these final directives on State, local, and tribal governments and the private sector. These final directives will not compel the expenditure of $100 million or more by any State, local, or tribal government or anyone in the private sector. Therefore, a statement under section 202 of the act is not required.

*Controlling Paperwork Burdens on the Public*

These final directives do not contain any record-keeping or reporting requirements or other information collection requirements as defined in 5 CFR part 1320 that are not already required by law or not already approved for use. Any information collected from the public that will be required by these final directives has been approved by the Office of Management and Budget and assigned control number 0596–0082. Accordingly, the review provisions of the Paperwork Reduction Act (44 U.S.C. 3501 *et seq.*) and its implementing regulations at 5 CFR part 1320 do not apply.

**5. Access to the Final Directives**

The Forest Service organizes its directive system by alphanumeric codes and subject headings. The intended audience for this direction is Forest Service employees charged with issuing and administrating outfitting and guiding special use permits. To view the final directives, visit the Forest Service's Web site at *http://www.fs.fed.us/specialuses/*. Only those sections of the FSM and FSH that are the subject of this notice have been posted, specifically, FSH 2709.11, sections 37.21b and 41.53a through 41.53r, and FSM 2713.1. Alternatively, the entire chapters may be viewed at *http://www.fs.fed.us/im/directives/*.

Dated: September 4, 2008.

**Sally Collins,**

*Associate Chief.*

[FR Doc. E8–21618 Filed 9–16–08; 8:45 am]

BILLING CODE 3410–11–P

## DEPARTMENT OF AGRICULTURE

### Forest Service

### National Urban and Community Forestry Advisory Council

**AGENCY:** Forest Service, USDA.

**ACTION:** Notice of meeting.

**SUMMARY:** The National Urban and Community Forestry Advisory Council will meet in San Diego, California, October 14–16, 2008. The purpose of the meeting is to discuss emerging issues in urban and community forestry and hear public input related to urban and community forestry.

**DATES:** The meeting will be held on October 14–16, 2008, 9 a.m. to 5 p.m.

**ADDRESSES:** The meeting will be held at the San Diego Marriott, Mission Valley, 8757 Rio San Diego Drive, San Diego, CA 92108. Written comments concerning this meeting should be addressed to Nancy Stremple, Executive Staff to National Urban and Community Forestry Advisory Council, 201 14th St., SW., Yates Building (1 Central) MS–1151, Washington, DC 20250–1151. Comments may also be sent via e-mail to *nstremple@fs.fed.us*, or via facsimile to 202–690–5792.

All comments, including names and addresses when provided, are placed in the record and are available for public inspection and copying. The public may inspect comments received at 201 14th St., SW., Yates Building (1 Central) MS–1151, Washington, DC 20250–1151. Visitors are encouraged to call ahead to 202–205–1054 to facilitate entry into the building.

**FOR FURTHER INFORMATION CONTACT:** Nancy Stremple, Executive Staff, or Robert Prather, Staff Assistant to National Urban and Community Forestry Advisory Council, 201 14th St., SW., Yates Building (1 Central) MS–1151, Washington, DC 20250–1151, phone 202–205–1054.

Individuals who use telecommunication devices for the deaf (TDD) may call the Federal Information Relay Service (FIRS) at 1–800–877–8339 between 8 a.m. and 8 p.m., Eastern Standard Time, Monday through Friday.

**SUPPLEMENTARY INFORMATION:** The meeting is open to the public. Council discussion is limited to Forest Service staff and Council members; however, persons who wish to bring urban and community forestry matters to the attention of the Council may file written statements with the Council staff (201 14th St., SW., Yates Building (1 Central) MS–1151, Washington, DC 20250–1151, e-mail: *nstremple@fs.fed.us*) before or after the meeting. Public input sessions will be provided at the meeting. Public comments will be compiled and provided to the Secretary of Agriculture along with the Council's recommendations.

Dated: September 10, 2008.

**Robin L. Thompson,**

*Associate Deputy Chief, State and Private Forestry.*

[FR Doc. E8–21752 Filed 9–16–08; 8:45 am]

BILLING CODE 3410–11–P

## DEPARTMENT OF AGRICULTURE

### Natural Resources Conservation Service

### Notice of Proposed Changes to the Natural Resources Conservation Service's National Handbook of Conservation Practices

**AGENCY:** Natural Resources Conservation Service, USDA.

**ACTION:** Notice of availability of proposed changes in the Natural Resources Conservation Service (NRCS) National Handbook of Conservation Practices for public review and comment.

**SUMMARY:** Notice is hereby given of the intention of NRCS to issue a series of revised conservation practice standards in its National Handbook of Conservation Practices. These standards include: Deep Tillage (Code 324); Waste Transfer (Code 634); and, Road/Trail/Landing Closure and Treatment (Code 654). NRCS State Conservationists who choose to adopt these practices for use within their States will incorporate them into Section IV of their respective electronic Field Office Technical Guide. These practices may be used in conservation systems that treat highly erodible land or on land determined to be a wetland.

**DATES:** *Effective Dates:* Comments will be received for a 30-day period commencing with this date of publication. Final versions of these new or revised conservation practice standards will be adopted after the close of the 30-day period and after consideration of all comments.

**ADDRESSES:** Comments should be submitted by one of the following methods:

1. In writing to: Noller Herbert, Director, Conservation Engineering Division, Natural Resources Conservation Service, Post Office Box 2890, Washington, DC 20013–2890; or
2. Electronically via e-mail to: *Noller.herbert@wdc.usda.gov.*

**FOR FURTHER INFORMATION:** Copies of these standards can be downloaded or printed from the following Web site: *ftp://ftp-fc.sc.egov.usda.gov/NHQ/practice-standards/federal-register/.* Single copies of paper versions of these standards also are available from NRCS in Washington, DC. Submit individual inquiries in writing to Noller Herbert, Director, Conservation Engineering Division, Natural Resources Conservation Service, Post Office Box 2890, Room 6139-South, Washington, DC 20013–2890; or e-mail: *Noller.herbert@wdc.usda.gov.*

**SUPPLEMENTARY INFORMATION:** The amount of the proposed changes varies considerably for each of the Conservation Practice Standards addressed in this Notice. To fully understand the proposed changes, individuals are encouraged to compare these changes with each standard's current version shown at: *http://www.nrcs.usda.gov/technical/Standards/nhcp.html.* To aid in this comparison, the following are highlights of the proposed revisions to each standard:

*Deep Tillage (Code 324)*—Only minor edits were made to this standard.

*Waste Transfer (Code 634)*—This practice standard was expanded to encompass manure and other by-products of agricultural operations. Previously, the standard only addressed manure.

(a) This standard applies where excess by-products (wastes) accumulate and can be transferred to an area for utilization as a resource.

(b) The Criteria Section is expanded by adding a description of solid-liquid separation and a clarification of clean-out access requirements.

*Road/Trail/Landing Closure and Treatment (Code 654)*—This is a new practice standard developed to address primarily the closure of existing farm, ranch, and forest roads to minimize their environmental impact.

Section 343 of the Federal Agriculture Improvement and Reform Act of 1996 requires NRCS to make available for public review and comment all proposed revisions to conservation practice standards used to carry out the highly erodible land and wetland provisions of the law. For the next 30 days, NRCS will receive comments relative to the proposed changes. Following that period, a determination will be made by NRCS regarding disposition of those comments, and a final determination of changes will be made.

Signed in Washington, DC, on September 4, 2008.

**Arlen L. Lancaster,**

*Chief.*

[FR Doc. E8–21653 Filed 9–16–08; 8:45 am]

**BILLING CODE 3410–16–P**

## DEPARTMENT OF COMMERCE

### International Trade Administration

**[A–570–922]**

### Antidumping Duty Order: Raw Flexible Magnets from the People's Republic of China

**AGENCY:** Import Administration, International Trade Administration, Department of Commerce.

**EFFECTIVE DATE:** September 17, 2008.

**SUMMARY:** Based on affirmative final determinations by the Department of Commerce (the ''Department'') and the International Trade Commission (''ITC''), the Department is issuing an antidumping duty order on raw flexible magnets from the People's Republic of China (''PRC''). On August 25, 2008, the ITC notified the Department of its affirmative final determination. *See Raw Flexible Magnets from China and Taiwan*, Investigation Nos. 701–TA–452 and 731–TA–1129 and 731–TA–1130 (Final), USITC Publication 4030 (August 2008).

The Department released a Notice of Antidumping Duty Order to the parties on August 27, 2008. However, the August 27, 2008, notice contained incorrect language regarding suspension of liquidation. This notice contains the correct language. *See* ''Antidumping Duty Order'' section below. The error was discovered prior to publication in the **Federal Register**. Consequently, this notice is being published in its place.

**FOR FURTHER INFORMATION CONTACT:** Shawn Higgins, AD/CVD Operations, Office 4, Import Administration, International Trade Administration, U.S. Department of Commerce, 14th Street and Constitution Avenue, NW, Washington, DC, 20230; telephone: (202) 482–0679.

**SUPPLEMENTARY INFORMATION:**

### Background

On July 10, 2008, the Department published the *Final Determination of Sales at Less Than Fair Value: Raw Flexible Magnets from the People's Republic of China*, 73 FR 39669 (July 10, 2008). On August 25, 2008, in accordance with section 735(d) of the Act, the ITC notified the Department of its final determination, pursuant to section 735(b)(1)(A)(i) of the Tariff Act of 1930, as amended (''the Act''), that an industry in the United States is threatened with material injury by reason of less–than-fair–value imports of subject merchandise from the PRC. *See* Letter from the ITC to the Secretary of Commerce, ''Notification of Final Affirmative Determination of Raw Flexible Magnets from the People's Republic of China and Taiwan (Investigation Nos. 701–TA–452 and 731–TA–1129 and 731–TA–1130),'' dated August 25, 2008. Pursuant to section 736(a) of the Act, the Department is publishing an antidumping duty order on the subject merchandise.

### Scope of Order

The products covered by this order are certain flexible magnets regardless of shape,[1] color, or packaging.[2] Subject flexible magnets are bonded magnets composed (not necessarily exclusively) of (i) any one or combination of various flexible binders (such as polymers or co–polymers, or rubber) and (ii) a magnetic element, which may consist of a ferrite permanent magnet material (commonly, strontium or barium ferrite, or a combination of the two), a metal alloy (such as NdFeB or Alnico), any combination of the foregoing with each other or any other material, or any other material capable of being permanently magnetized.

Subject flexible magnets may be in either magnetized or unmagnetized (including demagnetized) condition, and may or may not be fully or partially laminated or fully or partially bonded with paper, plastic, or other material, of any composition and/or color. Subject flexible magnets may be uncoated or may be coated with an adhesive or any other coating or combination of coatings.

Specifically excluded from the scope of this order are printed flexible magnets, defined as flexible magnets (including individual magnets) that are laminated or bonded with paper, plastic, or other material if such paper, plastic, or other material bears printed text and/or images, including but not limited to business cards, calendars, poetry, sports event schedules, business promotions, decorative motifs, and the like. This exclusion does not apply to such printed flexible magnets if the printing concerned consists of only the following: a trade mark or trade name; country of origin; border, stripes, or lines; any printing that is removed in the course of cutting and/or printing magnets for retail sale or other disposition from the flexible magnet; manufacturing or use instructions (*e.g.*, ''print this side up,'' ''this side up,'' ''laminate here''); printing on adhesive backing (that is, material to be removed in order to expose adhesive for use such as application of laminate) or on any other covering that is removed from the flexible magnet prior or subsequent to final printing and before use; non–permanent printing (that is, printing in a medium that facilitates easy removal, permitting the flexible magnet to be re–printed); printing on the back (magnetic) side; or any combination of the above.

All products meeting the physical description of subject merchandise that are not specifically excluded are within the scope of this order. The products subject to the order are currently classifiable principally under subheadings 8505.19.10 and 8505.19.20 of the Harmonized Tariff Schedule of the United States (''HTSUS''). The HTSUS subheadings are provided only for convenience and customs purposes; the written description of the scope of the order is dispositive.

### Antidumping Duty Order

In accordance with section 736(a)(1) of the Act, the Department will direct U.S. Customs and Border Protection (''CBP'') to assess, upon further instruction by the Department, antidumping duties equal to the amount by which the normal value of the merchandise exceeds the export price (or constructed export price) of the merchandise for all relevant entries of raw flexible magnets from the PRC.

According to section 736(b)(2) of the Act, duties shall be assessed on subject merchandise entered, or withdrawn from warehouse, for consumption on or after the date of publication of the ITC's notice of final determination if that determination is based on the threat of material injury and is not accompanied by a finding that injury would have resulted without the imposition of suspension of liquidation of entries since the Department's preliminary determination. In addition, section 736(b)(2) of the Act requires CBP to refund any cash deposits or bonds of estimated antidumping duties posted since the preliminary antidumping determination if the ITC's final determination is threat–based.

Because the ITC's final determination is based on the threat of material injury and is not accompanied by a finding that injury would have resulted but for the imposition of suspension of liquidation of entries since the *Preliminary Determination of Sales at*

[1] The term ''shape'' includes, but is not limited to profiles, which are flexible magnets with a non-rectangular cross-section.

[2] Packaging includes retail or specialty packaging such as digital printer cartridges.

*Less Than Fair Value: Raw Flexible Magnets from the People's Republic of China*, 73 FR 22327 (April 25, 2008) (''*Preliminary Determination*''), section 736(b)(2) of the Act is applicable. Therefore, the Department will direct CBP to assess, upon further advice, antidumping duties on all unliquidated entries of raw flexible magnets from the PRC entered, or withdrawn from warehouse, for consumption on or after September 2, 2008, the date of publication of the ITC's notice of final determination of threat of material injury in the **Federal Register**,[3] in accordance with the following dumping margins:

| Manufacturer/Exporter | Margin (Percent) |
|---|---|
| Guangzhou Newlife Magnet Electricity Co., Ltd.[4] | 105.00 |
| PRC–wide Entity | 185.28 |

[4] Guangzhou Newlife Magnet Electricity Co., Ltd. both manufactures and exports subject merchandise.

Effective September 2, 2008, CBP, pursuant to section 736(a)(3) of the Act, will require, at the same time as importers would normally deposit estimated duties on this merchandise, cash deposits equal to the estimated antidumping duty margins as listed above. The PRC–wide rate applies to all exporters of subject merchandise not specifically listed.

The Department will also instruct CBP to terminate the suspension of liquidation for entries of raw flexible magnets from the PRC entered, or withdrawn from warehouse, for consumption prior to September 2, 2008, and refund any cash deposits made and release any bonds posted between the publication of the *Preliminary Determination* on April 25, 2008, and the publication of the ITC's final determination on September 2, 2008.

This notice constitutes the antidumping duty order with respect to raw flexible magnets from the PRC pursuant to section 736(a) of the Act. Interested parties may contact the Department's Central Records Unit, Room 1117 of the main Department building, for copies of an updated list of antidumping duty orders currently in effect.

This order is published in accordance with section 736(a) of the Act and 19 CFR 351.211.

[3] *See Raw Flexible Magnets from China and Taiwan*, 73 FR 51317 (September 2, 2008).

Dated: September 9, 2008.

**Stephen J. Claeys,**

*Acting Assistant Secretary for Import Administration.*

[FR Doc. E8–21717 Filed 9–16–08; 8:45 am]

**BILLING CODE: 3510–DS–S**

## DEPARTMENT OF COMMERCE

### International Trade Administration

**[A–583–842]**

### Antidumping Duty Order: Raw Flexible Magnets from Taiwan

**AGENCY:** Import Administration, International Trade Administration, Department of Commerce.

**SUMMARY:** Based on affirmative final determinations by the Department of Commerce (the Department) and the International Trade Commission (ITC), the Department is issuing an antidumping duty order on raw flexible magnets from Taiwan.

We released a Notice of Antidumping Duty Order to the parties on August 28, 2008. The notice we released on August 28, 2008, contained incorrect language regarding suspension of liquidation. This notice contains the correct language. See ''Antidumping Duty Order'' section below. The error was discovered prior to publication in the **Federal Register**. Consequently, this notice is being published in its place.

**EFFECTIVE DATE:** September 17, 2008.

**FOR FURTHER INFORMATION CONTACT:** Kristin Case, AD/CVD Operations, Office 5, Import Administration, International Trade Administration, U.S. Department of Commerce, 14th Street and Constitution Avenue, NW, Washington, DC 20230; telephone: (202) 482–3174.

**SUPPLEMENTARY INFORMATION:**

### Background

On July 10, 2008, the Department published the final determination of sales at less than fair value of raw flexible magnets from Taiwan. See *Notice of Final Determination of Sales at Less Than Fair Value: Raw Flexible Magnets from Taiwan*, 73 FR 39673 (July 10, 2008). On August 25, 2008, the International Trade Commission (ITC) notified the Department of its final determination pursuant to section 735(d) of the Tariff Act of 1930, as amended (the Act), that an industry in the United States is threatened with material injury within the meaning of section 735(b)(1)(A)(1) of the Act by reason of less–than-fair–value imports of raw flexible magnets from Taiwan. See letter from the ITC to the Secretary of Commerce, Notification of Final Affirmative Determination of Raw Flexible Magnets from the People's Republic of China and Taiwan (Investigation Nos. 701–TA–452, 731–TA–1129, 731–TA–1130), dated August 25, 2008. Pursuant to section 736(a) of the Act, the Department is publishing an antidumping duty order on the subject merchandise.

### Scope of Order

The products covered by this order are certain flexible magnets regardless of shape,[1] color, or packaging.[2] Subject flexible magnets are bonded magnets composed (not necessarily exclusively) of (i) any one or combination of various flexible binders (such as polymers or co–polymers, or rubber) and (ii) a magnetic element, which may consist of a ferrite permanent magnet material (commonly, strontium or barium ferrite, or a combination of the two), a metal alloy (such as NdFeB or Alnico), any combination of the foregoing with each other or any other material, or any other material capable of being permanently magnetized.

Subject flexible magnets may be in either magnetized or unmagnetized (including demagnetized) condition, and may or may not be fully or partially laminated or fully or partially bonded with paper, plastic, or other material, of any composition and/or color. Subject flexible magnets may be uncoated or may be coated with an adhesive or any other coating or combination of coatings.

Specifically excluded from the scope of this order are printed flexible magnets, defined as flexible magnets (including individual magnets) that are laminated or bonded with paper, plastic, or other material if such paper, plastic, or other material bears printed text and/or images, including but not limited to business cards, calendars, poetry, sports event schedules, business promotions, decorative motifs, and the like. This exclusion does not apply to such printed flexible magnets if the printing concerned consists of only the following: a trade mark or trade name; country of origin; border, stripes, or lines; any printing that is removed in the course of cutting and/or printing magnets for retail sale or other disposition from the flexible magnet; manufacturing or use instructions (*e.g.*, ''print this side up,'' ''this side up,'' ''laminate here''); printing on adhesive backing (that is, material to be removed

[1] The term ''shape'' includes but is not limited to profiles, which are flexible magnets with a non-rectangular cross-section.

[2] Packaging includes retail or specialty packaging such as digital printer cartridges.

in order to expose adhesive for use such as application of laminate) or on any other covering that is removed from the flexible magnet prior or subsequent to final printing and before use; non–permanent printing (that is, printing in a medium that facilitates easy removal, permitting the flexible magnet to be re–printed); printing on the back (magnetic) side; or any combination of the above.

All products meeting the physical description of subject merchandise that are not specifically excluded are within the scope of this order. The products subject to the order are currently classifiable principally under subheadings 8505.19.10 and 8505.19.20 of the Harmonized Tariff Schedule of the United States (HTSUS). The HTSUS subheadings are provided only for convenience and customs purposes; the written description of the scope of this proceeding is dispositive.

**Antidumping Duty Order**

In accordance with section 736(a)(1) of the Act, the Department will direct U.S. Customs and Border Protection (CBP) to assess, upon further information from the Department, antidumping duties equal to the amount by which the normal value of the merchandise exceeds the export price (or the constructed export price) of the merchandise for all relevant entries of raw flexible magnets from Taiwan. According to section 736(b)(2) of the Act, duties shall be assessed on subject merchandise entered, or withdrawn from warehouse, for consumption on or after the date of publication of the ITC's notice of final determination if that determination is based on the threat of material injury and is not accompanied by a finding that injury would have resulted without the imposition of suspension of liquidation of entries since the Department's preliminary determination. In addition, section 736(b)(2) of the Act requires CBP to refund any cash deposits or bonds of estimated antidumping duties posted since the Department's preliminary antidumping determination if the ITC's final determination is threat–based. Because the ITC's final determination in this case is based on the threat of material injury and is not accompanied by a finding that injury would have resulted but for the imposition of suspension of liquidation of entries since the Department's preliminary determination,[3] section 736(b)(2) of the Act is applicable. Therefore, the Department will direct CBP to assess antidumping duties on all unliquidated raw flexible magnets from Taiwan entered, or withdrawn from warehouse, for consumption on or after September 2, 2008, the date of publication of the ITC's notice of final determination of threat of material injury in the **Federal Register**,[4] based on the antidumping margins listed below:

| Producer or Exporter | Weighted–Average Margin (percent) |
|---|---|
| Kin Fong Magnets Co., Ltd. | 38.03 |
| Magruba Flexible Magnets Co., Ltd. | 38.03 |
| JASDI Magnet Co., Ltd. | 38.03 |
| All Others | 31.20 |

Effective September 2, 2008, the date of publication of the ITC's notice of final determination in the **Federal Register**, CBP will require, at the same time as importers would normally deposit estimated duties on this merchandise, cash deposits for the subject merchandise equal to the estimated weighted–average antidumping margins listed above. See section 736(a)(3) of the Act. The all–others rate applies to all producers or exporters not specifically listed. The Department will also instruct CBP to terminate the suspension of liquidation for entries of raw flexible magnets from Taiwan entered, or withdrawn from warehouse, for consumption prior to September 2, 2008, and refund any cash deposits made and release any bonds posted between the publication of the Department's preliminary determination on April 25, 2008, and the publication of the ITC's final determination on September 2, 2008.

This notice constitutes the antidumping duty order with respect to raw flexible magnets from Taiwan, pursuant to section 736(a) of the Act. Interested parties may contact the Department's Central Records Unit, Room B–1117 of the main Department Building, for copies of an updated list of antidumping duty orders currently in effect.

This order is published in accordance with section 736(a) of the Act and 19 CFR 351.211.

Dated: September 9, 2008.

**Stephen J. Claeys,**

*Acting Assistant Secretary for Import Administration.*

[FR Doc. E8–21718 Filed 9–16–08; 8:45 am]

BILLING CODE 3510–DS–S

[3] See *Notice of Preliminary Determination of Sales at Less Than Fair Value: Raw Flexible Magnets from Taiwan*, 73 FR 22332 (April 25, 2008).

[4] See *Raw Flexible Magnets from China and Taiwan*, 73 FR 51317 (September 2, 2008).

## DEPARTMENT OF COMMERCE

### International Trade Administration

**[C–570–923]**

### Raw Flexible Magnets from the People's Republic of China: Countervailing Duty Order

**AGENCY:** Import Administration, International Trade Administration, Department of Commerce.

**SUMMARY:** Based on affirmative final determinations by the Department of Commerce (the Department) and the International Trade Commission (ITC), the Department is issuing a countervailing duty order on raw flexible magnets (RFM) from the People's Republic of China (PRC).

We released a Notice of Countervailing Duty Order to the parties released on August 28, 2008. The notice we released contained incorrect language regarding suspension of liquidation. This notice contains the correct language. See ''Countervailing Duty Order'' section below. The error was discovered prior to publication in the **Federal Register**. Consequently, this notice is being published in its place.

**EFFECTIVE DATE:** December 17, 2008.

**FOR FURTHER INFORMATION CONTACT:** Kristen Johnson, AD/CVD Operations, Office 3, Import Administration, International Trade Administration, U.S. Department of Commerce, 14th Street and Constitution Avenue, NW, Washington, DC 20230; telephone: (202) 482–4793.

**SUPPLEMENTARY INFORMATION:**

**Background**

On July 10, 2008, the Department published its final determination in the countervailing duty investigation on RFM from the PRC. *See Raw Flexible Magnets from the People's Republic of China: Final Affirmative Countervailing Duty Determination*, 73 FR 39667 (July 10, 2008).

On August 25, 2008, the ITC notified the Department of its final determination pursuant to section 705(b)(1)(A)(i) of the Tariff Act of 1930, as amended (the Act), that an industry in the United States is threatened with material injury by reason of subsidized imports of subject merchandise from the PRC. *See* Letter from the ITC to the Secretary of Commerce, Notification of Final Affirmative Determination of Raw Flexible Magnets from the People's Republic of China and Taiwan (Investigation Nos. 701–TA–452, 731–TA–1129, 731–TA–1130), dated August 25, 2008. Pursuant to section 736(a) of the Act, the Department is publishing a

countervailing duty order on the subject merchandise.

**Scope of the Order**

The products covered by this order are certain flexible magnets regardless of shape,[1] color, or packaging.[2] Subject flexible magnets are bonded magnets composed (not necessarily exclusively) of (i) any one or combination of various flexible binders (such as polymers or co–polymers, or rubber) and (ii) a magnetic element, which may consist of a ferrite permanent magnet material (commonly, strontium or barium ferrite, or a combination of the two), a metal alloy (such as NdFeB or Alnico), any combination of the foregoing with each other or any other material, or any other material capable of being permanently magnetized.

Subject flexible magnets may be in either magnetized or unmagnetized (including demagnetized) condition, and may or may not be fully or partially laminated or fully or partially bonded with paper, plastic, or other material, of any composition and/or color. Subject flexible magnets may be uncoated or may be coated with an adhesive or any other coating or combination of coatings.

Specifically excluded from the scope of this order are printed flexible magnets, defined as flexible magnets (including individual magnets) that are laminated or bonded with paper, plastic, or other material if such paper, plastic, or other material bears printed text and/or images, including but not limited to business cards, calendars, poetry, sports event schedules, business promotions, decorative motifs, and the like. This exclusion does not apply to such printed flexible magnets if the printing concerned consists of only the following: a trade mark or trade name; country of origin; border, stripes, or lines; any printing that is removed in the course of cutting and/or printing magnets for retail sale or other disposition from the flexible magnet; manufacturing or use instructions (*e.g.*, ''print this side up,'' ''this side up,'' ''laminate here''); printing on adhesive backing (that is, material to be removed in order to expose adhesive for use such as application of laminate) or on any other covering that is removed from the flexible magnet prior or subsequent to final printing and before use; non–permanent printing (that is, printing in a medium that facilitates easy removal, permitting the flexible magnet to be re–printed); printing on the back (magnetic) side; or any combination of the above.

All products meeting the physical description of subject merchandise that are not specifically excluded are within the scope of this order. The products covered by the order are currently classifiable principally under subheadings 8505.19.10 and 8505.19.20 of the Harmonized Tariff Schedule of the United States (HTSUS). The HTSUS subheadings are provided only for convenience and customs purposes; the written description of the scope of this order is dispositive.

**Countervailing Duty Order**

In accordance with section 706(a)(1) of the Act, the Department will direct U.S. Customs and Border Protection (CBP) to assess, upon further instruction by the Department, countervailing duties equal to the amount of the net countervailable subsidy for all relevant entries of RFM from the PRC.

According to section 706(b)(2) of the Act, duties shall be assessed on subject merchandise entered or withdrawn from warehouse, for consumption on or after September 2, 2008, the date of publication of the ITC's notice of final determination if that determination is based on the threat of material injury and is no accompanied by a finding that injury would have resulted without the imposition of suspension of liquidation of entries since the Department's preliminary determination. In addition, section 706(b)(2) of the Act requires CBP to refund any cash deposits or bonds of estimated countervailing duties posted since the Department's preliminary countervailing duty determination if the ITC's final determination is threat–based.

Because the ITC's final determination in this case is based on the threat of material injury and is not accompanied by a finding that injury would have resulted but for the imposition of suspension of liquidation of entries since the Department's preliminary determination,[3] section 706(b)(2) of the Act is applicable. Therefore, the Department will direct CBP to assess countervailing duties on all unliquidated entries of RFM from the PRC entered, or withdrawn from warehouse, for consumption on or after September 2, 2008, the date of publication of the ITC's notice of final determination of threat of material injury in the **Federal Register**,[4] based on the net countervailable subsidy rates listed below:

| Producer/exporter | Net Subsidy Rate (percent) |
|---|---|
| China Ningbo Cixi Import Export Corporation | 109.95 percent *ad valorem* |
| Polyflex Magnets Ltd. | 109.95 percent *ad valorem* |
| All Others | 109.95 percent *ad valorem* |

Effective September 2, 2008, CBP will require, at the same time as importers would normally deposit estimated duties, cash deposits for the subject merchandise equal to the net subsidy rates listed above. The all–others rate applies to all producers and exporters of subject merchandise not specifically listed.

The Department will also instruct CBP to terminate the suspension of liquidation for entries of RFM from the PRC entered, or withdrawn from warehouse, for consumption prior to September 2, 2008, and refund any cash deposit made and release any bonds posted between the publication of the Department's preliminary determination on February 25, 2008, and the publication of the ITC's final determination on September 2, 2008.

This notice constitutes the countervailing duty order with respect to RFM from the PRC pursuant to section 706(a) of the Act. Interested parties may contact the Department's Central Records Unit, Room 1117 of the main Department Building, for copies of an updated list of countervailing duty orders currently in effect.

This countervailing duty order is issued and published in accordance with section 706(a) of the Act and 19 CFR 351.211.

Dated: September 9, 2008.

**Stephen J. Claeys,**

*Acting Assistant Secretary for Import Administration.*

[FR Doc. E8–21719 Filed 9–16–08; 8:45 am]

**BILLING CODE: 3510–DS–S**

[1] The term ''shape'' includes, but is not limited to profiles, which are flexible magnets with a non-rectangular cross-section.

[2] ''Packaging includes retail or specialty packaging such as digital printer cartridges.

[3] *See Raw Flexible Magnets from the People's Republic of China: Preliminary Affirmative Countervailing Duty Determination and Alignment of Final Countervailing Duty Determination with Final Antidumping Duty Determination*, 73 FR 9998 (February 25, 2008).

[4] *See Raw Flexible Magnets from China and Taiwan*, 73 FR 51317 (September 2, 2008).

## DEPARTMENT OF COMMERCE

### National Oceanic and Atmospheric Administration

### Availability of Seats for the Channel Islands National Marine Sanctuary Advisory Council

**AGENCY:** National Marine Sanctuary Program (NMSP), National Ocean Service (NOS), National Oceanic and Atmospheric Administration, Department of Commerce (DOC).

**ACTION:** Notice and request for applications.

**SUMMARY:** The Channel Islands National Marine Sanctuary (CINMS) is seeking applicants for the following vacant seats on its Sanctuary Advisory Council (Council): Commercial Fishing member and alternate, Conservation member and alternate, Tourism member, Non-consumptive Recreational member and alternate, Research member and alternate, Business member and alternate, and two Public-at-large members. Applicants are chosen based upon: Their particular expertise and experience in relation to the seat for which they are applying, community and professional affiliations, views regarding the protection and management of marine resources, and the length of residence in the communities located near the Sanctuary. Applicants who are chosen as members should expect to serve in a volunteer capacity for 2-year terms, pursuant to the Council's Charter.

**DATES:** Applications are due by October 24, 2008.

**ADDRESSES:** Application kits may be obtained at *http://www.channelislands.noaa.gov/sac/news.html.* Completed applications should be sent to *Danielle.lipski@noaa.gov*.

**FOR FURTHER INFORMATION CONTACT:** Michael Murray, Channel Islands National Marine Sanctuary, 113 Harbor Way, Suite 150, Santa Barbara, CA 93109–2315, 805–966–7107 extension 464, *michael.murray@noaa.gov.*

**SUPPLEMENTARY INFORMATION:** The CINMS Advisory Council was originally established in December 1998 and has a broad representation consisting of 21 members, including ten government agency representatives and eleven members from the general public. The Council functions in an advisory capacity to the Sanctuary Superintendent. The Council works in concert with the Sanctuary Superintendent by keeping him or her informed about issues of concern throughout the Sanctuary, offering recommendations on specific issues, and aiding the Superintendent in achieving the goals of the National Marine Sanctuary Program. Specifically, the Council's objectives are to provide advice on: (1) Protecting natural and cultural resources and identifying and evaluating emergent or critical issues involving Sanctuary use or resources; (2) Identifying and realizing the Sanctuary's research objectives; (3) Identifying and realizing educational opportunities to increase the public knowledge and stewardship of the Sanctuary environment; and (4) Assisting to develop an informed constituency to increase awareness and understanding of the purpose and value of the Sanctuary and the National Marine Sanctuary Program.

**Authority:** 16 U.S.C. Sections 1431, *et seq.*

(Federal Domestic Assistance Catalog Number 11.429 Marine Sanctuary Program)

Dated: September 8, 2008.

**Daniel J. Basta,**

*Director, National Marine Sanctuary Program, National Ocean Service, National Oceanic and Atmospheric Administration.*

[FR Doc. E8–21495 Filed 9–16–08; 8:45 am]

BILLING CODE 3510–NK–M

## DEPARTMENT OF COMMERCE

### National Oceanic and Atmospheric Administration

### Availability of Seats for the Gray's Reef National Marine Sanctuary Advisory Council

**AGENCY:** Office of National Marine Sanctuaries (ONMS), National Ocean Service (NOS), National Oceanic and Atmospheric Administration, Department of Commerce (DOC).

**ACTION:** Notice and request for applications.

**SUMMARY:** The Gray's Reef National Marine Sanctuary (GRNMS or sanctuary) is seeking applicants for the following vacant seats on its Sanctuary Advisory Council (council) sport fishing, sport diving and regional conservation. Applicants are chosen based upon their particular expertise and experience in relation to the seat for which they are applying; community and professional affiliations; philosophy regarding the protection and management of marine resources; and possibly the length of residence in the area affected by the sanctuary. Applicants who are chosen as members should expect to serve three-year terms, pursuant to the council's Charter.

**DATES:** Applications are due by November 1, 2008.

**ADDRESSES:** Application kits may be obtained from Becky Shortland, Council Coordinator (*becky.shortland@noaa.gov,* 10 Ocean Science Circle, Savannah, GA 31411; 912–598–2381). Completed applications should be sent to the same address.

**FOR FURTHER INFORMATION CONTACT:** Becky Shortland, Council Coordinator (*becky.shortland@noaa.gov,* 10 Ocean Science Circle, Savannah, GA 31411; 912–598–2381).

**SUPPLEMENTARY INFORMATION:** The sanctuary advisory council was established in August 1999 to provide advice and recommendations on management and protection of the sanctuary. The advisory council, through its members, also serves as liaison to the community regarding sanctuary issues and represents community interests, concerns, and management needs to the sanctuary and NOAA.

**Authority:** 16 U.S.C. Sections 1431, *et seq.*

(Federal Domestic Assistance Catalog Number 11.429 Marine Sanctuary Program)

Dated: September 8, 2008.

**Daniel J. Basta,**

*Director, Office of National Marine Sanctuaries, National Ocean Service, National Oceanic and Atmospheric Administration.*

[FR Doc. E8–21494 Filed 9–16–08; 8:45 am]

BILLING CODE 3510–NK–M

## DEPARTMENT OF COMMERCE

### National Oceanic and Atmospheric Administration

**RIN 0648–AW65**

### Atlantic Highly Migratory Species; Atlantic Shark Management Measures

**AGENCY:** National Marine Fisheries Service (NMFS), National Oceanic and Atmospheric Administration (NOAA), Commerce.

**ACTION:** Changing the time and location of a scoping meeting.

**SUMMARY:** NMFS has changed the time and location of the Small Coastal Shark (SCS) Amendment 3 scoping meeting that was scheduled to be held in Gloucester, MA, on October 9, 2008. The list of all scheduled scoping meetings was previously published on July 2, 2008 (73 FR 37932).

**DATES:** The new time will be from 5:30 p.m. to 7:30 p.m. on October 9, 2008. See **ADDRESSES** for information on the change of location.

**ADDRESSES:** The new location of the meeting will be at the Peabody Institute Library, 82 Main Street, Peabody, MA, 01960.

**FOR FURTHER INFORMATION CONTACT:** Jess Beck at (301) 713–2347 or Jackie Wilson at (240) 338–3936.

**SUPPLEMENTARY INFORMATION:** The Atlantic shark fisheries are managed under the authority of the Magnuson–Stevens Fishery Conservation and Management Act (Magnuson–Stevens Act). The 2006 Consolidated Highly Migratory Species Fishery Management Plan (HMS FMP) is implemented by regulations at 50 CFR part 635.

On May 7, 2008 (73 FR 25665), NMFS published a Notice of Intent (NOI) that summarized the 2007 SCS stock assessment conducted for Atlantic sharpnose, blacknose, bonnethead, and finetooth sharks. The NOI also described NMFS' determination as to the status of these stocks based on the results of the 2007 stock assessment, including the determination that blacknose sharks are overfished with overfishing occurring. As a result of this determination, NMFS is taking steps to amend current shark management measures via a third FMP amendment to the 2006 Consolidated HMS FMP. NMFS anticipates completing this amendment and any related documents by January 1, 2010. The comment period for the NOI has been extended (73 FR 37932, July 2, 2008) and now ends at 5 p.m. on October 31, 2008. On July 2, 2008, NMFS also announced the availability of an issues and options presentation describing potential measures for inclusion in Amendment 3 to the 2006 Consolidated HMS FMP.

### Request for Comments

Four scoping meetings have been scheduled to provide the opportunity for public comment on potential SCS shark management measures. NMFS has changed the time and location of the scoping meeting that was scheduled to be held in Gloucester, MA, on October 9, 2008. This meeting will now be held from 5:30 p.m. to 7:30 p.m. at the Peabody Institute Library, 82 Main Street, Peabody, MA, 01960. The schedule for the other scoping meetings remains unchanged.

In addition to the scheduled scoping meetings, NMFS will also present the issues and options presentation to the five Atlantic Regional Fishery Management Councils and the Atlantic and Gulf States Marine Fisheries Commissions during the public comment period. Please see the Councils' and Commissions' summer and fall meeting notices for dates, times, and locations. Finally, NMFS also expects to present the issues and options presentation at the fall 2008 HMS Advisory Panel (AP) meeting. The date and location of the AP meeting will be announced in a future **Federal Register** notice.

Comments received on this action will assist NMFS in determining the options for rulemaking to conserve and manage shark resources and fisheries, consistent with the Magnuson–Stevens Act and the 2006 Consolidated HMS FMP.

### Scoping Meetings Code of Conduct

The public is reminded that NMFS expects participants at the scoping meetings to conduct themselves appropriately. At the beginning of each meeting, a representative of NMFS will explain the ground rules (e.g., alcohol is prohibited from the meeting room; attendees will be called to give their comments in the order in which they registered to speak; each attendee will have an equal amount of time to speak; attendees may not interrupt one another, etc.). The NMFS representative will structure the meeting so that all attending members of the public will be able to comment, if they so choose. Attendees are expected to respect the ground rules, and those that do not will be asked to leave the meeting.

### Special Accommodations

The meetings are physically accessible to people with disabilities. Requests for sign language interpretation or other auxiliary aids should be directed to Jess Beck (see **FOR FURTHER INFORMATION CONTACT**) at least 7 days prior to the meeting.

Dated: September 10, 2008.

**James P. Burgess,**

*Acting Director, Office of Sustainable Fisheries, National Marine Fisheries Service.*

[FR Doc. E8–21779 Filed 9–16–08; 8:45 am]

**BILLING CODE 3510–22–S**

---

## DEPARTMENT OF COMMERCE

## National Oceanic and Atmospheric Administration

## Science Advisory Board (SAB) Meeting

**AGENCY:** Office of Oceanic and Atmospheric Research (OAR), National Oceanic and Atmospheric Administration (NOAA), Department of Commerce (DOC).

**ACTION:** Notice of Open Meeting.

**SUMMARY:** The Science Advisory Board (SAB) was established by a Decision Memorandum dated September 25, 1997, and is the only Federal Advisory Committee with responsibility to advise the Under Secretary of Commerce for Oceans and Atmosphere on strategies for research, education, and application of science to operations and information services. SAB activities and advice provide necessary input to ensure that National Oceanic and Atmospheric Administration (NOAA) science programs are of the highest quality and provide optimal support to resource management.

*Time and Date:* The meeting will be held Wednesday, October 15, 2008, from 10:30 a.m. to 5 p.m. and Thursday, October 16, 2008, from 8:15 a.m. to 2 p.m. These times and the agenda topics described below are subject to change. Please refer to the Web page *http://www.sab.noaa.gov/Meetings/meetings.html* for the most up-to-date meeting agenda.

*Place:* The meeting will be held both days at the Hilton Washington DC/Silver Spring, 8727 Colesville Road, Silver Spring, Md. 20910. Please check the SAB Web site *http://www.sab.noaa.gov* for confirmation of the venue and for directions.

*Status:* The meeting will be open to public participation with a 30-minute public comment period on October 15 (check website to confirm time). The SAB expects that public statements presented at its meetings will not be repetitive of previously submitted verbal or written statements. In general, each individual or group making a verbal presentation will be limited to a total time of five (5) minutes. Written comments should be received in the SAB Executive Director's Office by October 10, 2008 to provide sufficient time for SAB review. Written comments received by the SAB Executive Director after October 10, 2008, will be distributed to the SAB, but may not be reviewed prior to the meeting date. Seats will be available on a first-come, first-served basis.

*Matters to be Considered:* The meeting will include the following topics: (1) Final Report from the Fire Weather Research Working Group; (2) Preliminary Draft Report from Social Sciences Working Group; (3) Climate Working Group Development of Options for a National Climate Service; (4) NOAA Response to the Report from the SAB on Examining Advisory Options for Improving Communications Among NOAA's Partners; (5) SAB Strategic Planning Discussion; and (6) NOAA Transition to the Next Administration.

**FOR FURTHER INFORMATION CONTACT:** Dr. Cynthia Decker, Executive Director, Science Advisory Board, NOAA, Rm.

11230, 1315 East-West Highway, Silver Spring, Maryland 20910. (Phone: 301–734–1156, Fax: 301–713–1459, E-mail: *Cynthia.Decker@noaa.gov*); or visit the NOAA SAB Web site at *http://www.sab.noaa.gov*.

Dated: September 11, 2008.

**Mark E. Brown,**

*Chief Financial Officer, Office of Oceanic and Atmospheric Research, National Oceanic and Atmospheric Administration.*

[FR Doc. E8–21642 Filed 9–16–08; 8:45 am]

BILLING CODE 3510–KD–P

## DEPARTMENT OF DEFENSE

### Office of the Secretary of Defense

### Notification of Cancellation of Meeting of the Defense Advisory Board for Employer Support of the Guard and Reserve (DAB–ESGR)

**AGENCY:** Department of Defense.

**ACTION:** Notice of cancelled open meeting.

**SUMMARY:** This notice announces the cancellation of the meeting of the Defense Advisory Board for Employer Support of the Guard and Reserve scheduled for Thursday, September 18, 2008 (1300–1500 hrs). The meeting is cancelled due to lack of a quorum.

**FOR FURTHER INFORMATION CONTACT:** MAJ Elaine M. Gullotta at 703–696–1385 ext 540, or email at *elaine.gullotta@osd.mil.*

**SUPPLEMENTARY INFORMATION:** The Department of Defense announced this open meeting in a notice that was published in the **Federal Register** (73 FR 44973) dated August 1, 2008.

Dated: September 11, 2008.

**Robert L. Cushing, Jr.,**

*Alternate OSD Federal Register Liaison Officer, Department of Defense.*

[FR Doc. E8–21703 Filed 9–16–08; 8:45 am]

BILLING CODE 5001–06–P

## DEPARTMENT OF DEFENSE

### Office of the Secretary

### National Security Education Board Group of Advisors Meeting

**AGENCY:** Under Secretary of Defense Personnel and Readiness, DoD.

**ACTION:** Notice of meeting.

**SUMMARY:** Pursuant to Public Law 92–463, notice is hereby given of a forthcoming meeting of the National Security Education Board Group of Advisors. The purpose of the meeting is to review and make recommendations to the Board concerning requirements established by the David L. Boren National Security Education Act, Title VIII of Public Law 102–183, as amended.

**DATES:** September 23, 2008 (0800–1200).

**ADDRESSES:** Liaison Capital Hill,415 New Jersey Ave, NW., Washington, DC 20001.

**FOR FURTHER INFORMATION CONTACT:** Dr. Kevin Gormley, Program Officer, National Security Education Program, 1101 Wilson Boulevard, Suite 1210, Rosslyn P.O. Box 20010, Arlington, Virginia 22209–2248; (703) 696–1991. Electronic mail address: *Gormleyk@ndu.edu.*

**SUPPLEMENTARY INFORMATION:** The National Security Education Board Group of Advisors meeting is open to the public. The public is afforded the opportunity to submit written statements associated with NSEP.

Dated: September 9, 2008.

**Patricia L. Toppings,**

*OSD Federal Register Liaison Officer, Department of Defense.*

[FR Doc. E8–21702 Filed 9–16–08; 8:45 am]

BILLING CODE 5001–06–P

## DEPARTMENT OF DEFENSE

### Department of the Air Force

### Notice of Intent To Grant an Exclusive Patent License

**AGENCY:** Department of the Air Force.

**ACTION:** Notice.

**SUMMARY:** This Notice is to correct the title of the earlier published version on September 9, 2008 Vol. 73, No 17. Notice of Intent to Grant a Partially Exclusive Patent License. Pursuant to the provisions of Part 404 of Title 37, code of Federal Regulations, which implements Public Law 96–517, as amended, the Department of the Air Force announces its intention to grant Allcomp, Incorporated, a California corporation, having a place of business at 209 Puente Avenue, City of Industry, California 91746–2304 an exclusive license in any right, title and interest the Air Force has in:

U.S. Patent No. 6,309,703, issued 30 October 2001, entitled ''Carbon and Ceramic Matrix Composites Fabricated by a Rapid Low-Cost Process Incorporating In-Situ Polymerization of Wetting Monomers,'' by Phillip G. Wapner, Wesley P. Hoffman and Steven Jones.

**DATES:** A license for this patent will be granted unless a written objection is received within fifteen (15) days from the date of publication of this Notice.

**FOR FURTHER INFORMATION CONTACT:** Written objection should be sent to: Air Force Material Command Law Office, AFMCLO/JAZ, Building 11, room D18, 2240 B Street, Wright Patterson AFB OH 45433–7109. Telephone: (937) 255–2838; Facsimile (937) 255–7333.

**Bao-Anh Trinh,**

*Air Force Federal Register Liaison Officer.*

[FR Doc. E8–21695 Filed 9–16–08; 8:45 am]

BILLING CODE 5001–05–P

## DEPARTMENT OF DEFENSE

### Department of the Air Force

### Air University Board of Visitors Meeting

**ACTION:** Notice of Meeting of the Air University Board of Visitors.

**SUMMARY:** Under the provisions of the Federal Advisory Committee Act of 1972 (5 U.S.C., Appendix, as amended), the Government in the Sunshine Act of 1976 (5 U.S.C. 552b, as amended), and 41 CFR 102–3.150, the Department of Defense announces that the Air University Board of Visitors' meeting will take place on Monday, November 17th, 2008, from 8 a.m.–5 p.m., and Tuesday, November 18th, 2008, from 8 a.m.–5 p.m. in the Air University Commander's Conference Room, Air University Headquarters and again on Tuesday, 6 p.m.–8 p.m., at the Officers' Club, Maxwell Air Force Base, AL 36112.

The purpose of this meeting is to provide independent advice and recommendations on matters pertaining to the educational, doctrinal, and research policies and activities of Air University. The agenda will include topics relating to the policies, programs, and initiatives of Air University educational programs.

Pursuant to 5 U.S.C. 552b, as amended, and 41 CFR 102–3.155 all sessions of the Air University Board of Visitors' meeting will be open to the public. Any member of the public wishing to provide input to the Air University Board of Visitors should submit a written statement in accordance with 41 CFR 102–3.140(c) and section 10(a)(3) of the Federal Advisory Committee Act and the procedures described in this paragraph. Written statements can be submitted to the Designated Federal Officer at the address detailed below at any time. Statements being submitted in response to the agenda mentioned in this notice must be received by the Designated Federal Officer at the address listed below at least five calendar days prior

to the meeting which is the subject of this notice. Written statements received after this date may not be provided to or considered by the Air University Board of Visitors until its next meeting. The Designated Federal Officer will review all timely submissions with the Air University Board of Visitors' Board Chairperson and ensure they are provided to members of the Board before the meeting that is the subject of this notice. Additionally, any member of the public wishing to attend this meeting should contact either person listed below at least five calendar days prior to the meeting for information on base entry passes.

**FOR FURTHER INFORMATION CONTACT:** Dr. Dorothy Reed, Federal Designated Officer, Air University Headquarters, 55 LeMay Plaza South, Maxwell Air Force Base, Alabama 36112–6335, telephone (334) 953–5159 or Mrs. Diana Bunch, Alternate Federal Designated Officer, same address, telephone (334) 953–4547.

**Bao-Anh Trinh,**

*DAF, Air Force Federal Register Liaison Officer.*

[FR Doc. E8–21700 Filed 9–16–08; 8:45 am]

**BILLING CODE 5001–05–P**

## DEPARTMENT OF DEFENSE

### Department of the Army

### Notice of Availability of the Record of Decision (ROD) for Army Growth and Force Structure Realignment To Support Operations in the Pacific Theater

**AGENCY:** Department of the Army, DoD.

**ACTION:** Notice of availability (NOA).

**SUMMARY:** The Department of the Army announces the availability of the ROD for Army Growth and Force Structure Realignment to Support Operations in the Pacific Theater. This ROD announces the Army's decisions for growing and realigning U.S. Army forces to support operations in the Pacific Theater, which covers more than 50 percent of the earth's surface and includes more than 39 countries. Pursuant to the National Environmental Policy Act (NEPA), the Department of the Army prepared a Supplemental Programmatic Environmental Impact Statement (SPEIS) that evaluated the potential environmental and socioeconomic effects associated with alternatives for Army growth and realignment. In the Final SPEIS (published July 24, 2008), the Army identified Alternative Two as the preferred alternative for implementing growth in U.S. Army Garrison Hawaii (USAG–HI) and Alternative Three as the preferred alternative for implementing growth in U.S. Army Garrisons in Alaska. The ROD explains that the Army will proceed with its preferred alternatives to station approximately 1,980 new Soldiers in Hawaii and approximately 2,200 in Alaska. This decision also validates previous decisions to station a 254 Soldier Expeditionary Sustainment Command (ESC) at Fort Lewis, Washington, and divert the stationing of a 570 Soldier Maneuver Enhancement Brigade (MEB) from Schofield Barracks, Hawaii, to Fort Drum, New York. These alternatives best support Army-wide modular transformation; support the National Defense and Security Strategies; add the necessary Combat Support (CS) and Combat Service Support (CSS) Soldiers to Army forces; and grow critical support brigades and headquarters to efficiently carry out missions in the Pacific Theater. The decisions contained within the ROD will result in a total growth of Army forces within the Pacific Theater by approximately 4,200 Soldiers and will realign forces to improve readiness and responsiveness to meet future challenges.

**ADDRESSES:** Comments or questions regarding the ROD can be sent to the Public Affairs Office, U.S. Army Environmental Command, Building E4460, Attention: IMAE–PA 5179 Hoadley Road, Aberdeen Proving Ground, MD 21010–5401.

**FOR FURTHER INFORMATION CONTACT:** Public Affairs Office at (410) 436–2556; facsimile at (410) 436–1693 (during normal business hours Monday through Friday).

**SUPPLEMENTARY INFORMATION:** In January 2007, President Bush asked Congress for authority to increase the overall strength of the Army by 74,200 Soldiers over the next five years. This growth will mitigate shortages in units, Soldiers, and time to train that would otherwise inhibit the Army from meeting readiness goals and supporting strategic requirements. In September 2007, the Secretary of Defense approved the Army's proposal to accelerate growth for the Active component and Army National Guard. The Army must grow, adjust its force structure, and station its units and Soldiers to meet the strategic requirements of the contemporary global security environment. To meet these needs, the Army has begun moving forward with growth and realignment of its forces in the continental U.S. The environmental impacts of these actions were studied in 2007 and the final ROD for growth and realignment actions in the continental U.S. was issued in January 2008. At that time, the unique mission requirements and special needs of the Pacific Theater were still being assessed. The Army has carefully considered the structure of its forces available to support operations in the Pacific Theater, an active operational theater as well as a force provider to global mission requirements. This decision is designed to ensure that the right capabilities are available to accomplish the wide range of theater mission requirements and uphold regional national security interests in the Pacific region.

The Final SPEIS was published in July 2008. It provided the Army senior leadership with an assessment of environmental and socioeconomic impacts associated with alternatives for implementing the Proposed Action, as well as feedback and concerns of the public. This information was considered as part of the decision-making process for selecting the final stationing locations for new units. Major training installations in the continental U.S. as well as garrison stationing locations in Hawaii and Alaska were considered for the stationing of additional units to support Proposed Action.

Stationing decisions included in the ROD for Army Growth and Force Structure Realignment to Support Operations in the Pacific Theater include: (1) The stationing of approximately 1,775 new CSICSS Soldiers to include a new MEB headquarters at Fort Richardson, Alaska; (2) The stationing of approximately 425 new CS/CSS Soldiers at Fort Wainwright, Alaska; (3) The stationing of approximately 1,680 new CS/CSS Soldiers including new Military Police and Engineer Brigade Headquarters units at Schofield Barracks, Hawaii; (4) The stationing of approximately 300 additional CS/CSS Soldiers at Fort Shafter, Hawaii; (5) The validation of the stationing of the ESC at Fort Lewis, Washington; (6) The validation of decisions to divert a MEB from Schofield Barracks, Hawaii to Fort Drum, New York.

The full text of the ROD and Final SPEIS are available at *http://www.aec.army.mil.*

Dated: September 10, 2008.

**Addison D. Davis, IV,**

*Deputy Assistant Secretary of the Army, (Environment, Safety and Occupational Health).*

[FR Doc. E8–21679 Filed 9–16–08; 8:45 am]

**BILLING CODE 3710–08–M**

## DEPARTMENT OF EDUCATION

### Notice of Proposed Information Collection Requests

**AGENCY:** Department of Education.

**SUMMARY:** The IC Clearance Official, Regulatory Information Management Services, Office of Management, invites comments on the proposed information collection requests as required by the Paperwork Reduction Act of 1995.

**DATES:** Interested persons are invited to submit comments on or before November 17, 2008.

**SUPPLEMENTARY INFORMATION:** Section 3506 of the Paperwork Reduction Act of 1995 (44 U.S.C. Chapter 35) requires that the Office of Management and Budget (OMB) provide interested Federal agencies and the public an early opportunity to comment on information collection requests. OMB may amend or waive the requirement for public consultation to the extent that public participation in the approval process would defeat the purpose of the information collection, violate State or Federal law, or substantially interfere with any agency's ability to perform its statutory obligations. The IC Clearance Official, Regulatory Information Management Services, Office of Management, publishes that notice containing proposed information collection requests prior to submission of these requests to OMB. Each proposed information collection, grouped by office, contains the following: (1) Type of review requested, e.g. new, revision, extension, existing or reinstatement; (2) Title; (3) Summary of the collection; (4) Description of the need for, and proposed use of, the information; (5) Respondents and frequency of collection; and (6) Reporting and/or Recordkeeping burden. OMB invites public comment.

The Department of Education is especially interested in public comment addressing the following issues: (1) Is this collection necessary to the proper functions of the Department; (2) will this information be processed and used in a timely manner; (3) is the estimate of burden accurate; (4) how might the Department enhance the quality, utility, and clarity of the information to be collected; and (5) how might the Department minimize the burden of this collection on the respondents, including through the use of information technology.

Dated: September 11, 2008.

**Angela C. Arrington,**

*IC Clearance Official, Regulatory Information Management Services, Office of Management.*

### Office of Communications and Outreach

*Type of Review:* Extension.

*Title:* No Child Left Behind—Blue Ribbon Schools Program.

*Frequency:* Annually.

*Affected Public:* Not-for-profit institutions; State, Local, or Tribal Gov't, SEAs or LEAs.

*Reporting and Recordkeeping Hour Burden:*

*Responses:* 413

*Burden Hours:* 16,420

*Abstract:* The purpose of the NCLB-Blue Ribbon Schools Program is to recognize and present as models elementary and secondary schools in the United States with high numbers of students from disadvantaged backgrounds that dramatically improved student performance to high levels on state or nationally-normed assessments and to recognize schools whose students achieve in the top 10 percent on state or nationally-normed assessments.

Requests for copies of the proposed information collection request may be accessed from *http://edicsweb.ed.gov*, by selecting the ''Browse Pending Collections'' link and by clicking on link number 3810. When you access the information collection, click on ''Download Attachments'' to view. Written requests for information should be addressed to U.S. Department of Education, 400 Maryland Avenue, SW., LBJ, Washington, DC 20202–4537. Requests may also be electronically mailed to *ICDocketMgr@ed.gov* or faxed to 202–401–0920. Please specify the complete title of the information collection when making your request.

Comments regarding burden and/or the collection activity requirements should be electronically mailed to *ICDocketMgr@ed.gov*. Individuals who use a telecommunications device for the deaf (TDD) may call the Federal Information Relay Service (FIRS) at 1–800–877–8339.

[FR Doc. E8–21693 Filed 9–16–08; 8:45 am]

BILLING CODE 4000–01–P

## DEPARTMENT OF EDUCATION

### Notice of Proposed Information Collection Requests

*Correction*

In notice document E8–19918 beginning on page 50785 in the issue of Thursday, August 28, 2008, make the following correction:

On page 50785, in the third column, under **ADDRESSES**, in the third line ''FAFSA. *Comments@ed.gov*'' should read ''*FAFSA.Comments@ed.gov*''.

[FR Doc. Z8–19918 Filed 9–16–08; 8:45 am]

BILLING CODE 1505–01–D

## DEPARTMENT OF ENERGY

### Agency Information Collection Extension

**AGENCY:** U.S. Department of Energy.

**ACTION:** Submission for Office of Management and Budget (OMB) review; comment request.

**SUMMARY:** The Department of Energy (DOE) has submitted an information collection package to the OMB for extension under the provisions of the Paperwork Reduction Act of 1995 [1]. The package requests a three-year extension of its Security, OMB Control Number 1910–1800. This information collection request covers information necessary for DOE management to exercise management oversight and control over their contractors. The collections consist of information (1) for the nuclear materials control and accountability for DOE-owned and -leased facilities and DOE-owned nuclear materials at other facilities that are exempt from licensing by the NRC; (2) for the protection of classified information, special nuclear materials and other national security assets (DOE site self-assessments and site security plans); and (3) collection of Foreign Ownership, Control or Influence data from bidders on DOE contracts requiring personnel security clearances.

**DATES:** Comments regarding this collection must be received on or before October 17, 2008. If you anticipate that you will be submitting comments, but find it difficult to do so within that period of time allowed by this notice, please advise the OMB Desk Officer of your intention to make a submission as soon as possible. The Desk Officer may be telephoned at 202–395–4650.

**ADDRESSES:** Written comments may be sent to the:

DOE Desk Officer, Office of Information and Regulatory Affairs, Office of Management and Budget, New Executive Office Building, Room 10102, 735 17th Street., NW., Washington, DC 20503;

And to

Kathy Murphy, HS–1.23 Germantown Building, U.S. Department of Energy,

[1] 44 U.S.C., 3501 et seq.

1000 Independence Ave. SW., Washington, DC 20585–1290;

or by fax at 301–903–5492 or by e-mail at *Kathy.murphy@hq.doe.gov.*

**FOR FURTHER INFORMATION CONTACT:** Requests for additional information or copies of the information collection instrument and instructions should be directed to the addressees listed above in **ADDRESSES**.

**SUPPLEMENTARY INFORMATION:** This package contains: *(1) OMB No.* 1910–1800; *(2) Package Title:* Security; *(3) Type of Review:* renewal; *(4) Purpose:* for DOE management to exercise management oversight and control over its contractors; *(5) Respondents:* 75,858; *(6) Estimated Number of Burden Hours: 265,564.*

**Statutory Authority:** Department of Energy Organization Act, Public Law 95–91, of August 4, 1977.

Issued in Washington, DC, on August 28, 2008.

**Lesley A. Gasperow,**

*Director, Office of Resource Management, Office of Health, Safety and Security.*

[FR Doc. E8–21676 Filed 9–16–08; 8:45 am]

**BILLING CODE 6450–01–P**

## DEPARTMENT OF ENERGY

### Environmental Management Site-Specific Advisory Board, Oak Ridge Reservation

**AGENCY:** Department of Energy.

**ACTION:** Notice of open meeting.

**SUMMARY:** This notice announces a meeting of the Environmental Management Site-Specific Advisory Board (EM SSAB), Oak Ridge Reservation. The Federal Advisory Committee Act (Pub. L. No. 92–463, 86 Stat. 770) requires that public notice of this meeting be announced in the **Federal Register**.

**DATES:** Wednesday, October 8, 2008, 6 p.m.

**ADDRESSES:** DOE Information Center, 475 Oak Ridge Turnpike, Oak Ridge, Tennessee.

**FOR FURTHER INFORMATION CONTACT:** Pat Halsey, Federal Coordinator, Department of Energy Oak Ridge Operations Office, P.O. Box 2001, EM–90, Oak Ridge, TN 37831. Phone (865) 576–4025; Fax (865) 576–2347 or e-mail: *halseypj@oro.doe.gov* or check the Web site at *http://www.oakridge.doe.gov/em/ssab.*

**SUPPLEMENTARY INFORMATION:**

*Purpose of the Board:* The purpose of the Board is to make recommendations to DOE in the areas of environmental restoration, waste management, and related activities.

*Tentative Agenda:* The main presentation is on ''Project Baseline Summaries and the Budget Information Process.''

*Public Participation:* The meeting is open to the public. Written statements may be filed with the Board either before or after the meeting. Individuals who wish to make oral statements pertaining to the agenda item should contact Pat Halsey at the address or telephone number listed above. Requests must be received five days prior to the meeting and reasonable provision will be made to include the presentation in the agenda. The Deputy Designated Federal Officer is empowered to conduct the meeting in a fashion that will facilitate the orderly conduct of business. Individuals wishing to make public comment will be provided a maximum of five minutes to present their comments.

*Minutes:* Minutes will be available by writing or calling Pat Halsey at the address and phone number listed above. Minutes will also be available at the following Web site: *http://www.oakridge.doe.gov/em/ssab/minutes.htm.*

Issued at Washington, DC, on September 12, 2008.

**Rachel Samuel,**

*Deputy Committee Management Officer.*

[FR Doc. E8–21681 Filed 9–16–08; 8:45 am]

**BILLING CODE 6450–01–P**

## DEPARTMENT OF ENERGY

### Environmental Management Site-Specific Advisory Board, Portsmouth

**AGENCY:** Department of Energy (DOE).

**ACTION:** Notice of open meeting.

**SUMMARY:** This notice announces a meeting of the Environmental Management Site-Specific Advisory Board (EM SSAB), Portsmouth. The Federal Advisory Committee Act (Pub. L. No. 92–463, 86 Stat. 770) requires that public notice of this meeting be announced in the **Federal Register**.

**DATES:** Thursday, October 2, 2008, 6 p.m.

**ADDRESSES:** Ohio State University, Endeavor Center, 1862 Shyville Road, Piketon, Ohio 45661.

**FOR FURTHER INFORMATION CONTACT:** David Kozlowski, Deputy Designated Federal Officer, Department of Energy, Portsmouth/Paducah Project Office, Post Office Box 700, Piketon, Ohio 45661, (740) 897–2759, *David.Kozlowski@lex.doe.gov.*

**SUPPLEMENTARY INFORMATION:**

*Purpose of the Board:* The purpose of the Board is to make recommendations to DOE in the areas of environmental restoration, waste management and related activities.

*Tentative Agenda*

- Call to Order, Introductions, Review of Agenda
- Deputy Designated Federal Officer's Comments
- Federal Coordinator's Comments
- Liaisons' Comments
  - Ohio Environmental Protection Agency Comments
  - Suggestions for Possible Liaisons
- Presentations
- Public Comments
- Administrative Issues—Actions:
  - Operating Procedures
  - Review of EM SSAB Chairs Meeting
  - Board Retreat
- Final Comments
- Adjourn

Breaks taken as appropriate.

*Public Participation:* The meeting is open to the public. Written statements may be filed with the Board either before or after the meeting. Individuals who wish to make oral statements pertaining to agenda items should contact David Kozlowski at the address or telephone number listed above. Requests must be received five days prior to the meeting and reasonable provision will be made to include the presentation in the agenda. The Deputy Designated Federal Officer is empowered to conduct the meeting in a fashion that will facilitate the orderly conduct of business. Individuals wishing to make public comment will be provided a maximum of five minutes to present their comments.

*Minutes:* Minutes will be available by writing or calling David Kozlowski at the address and phone number listed above.

Issued at Washington, DC, on September 12, 2008.

**Rachel Samuel,**

*Deputy Committee Management Officer.*

[FR Doc. E8–21683 Filed 9–16–08; 8:45 am]

**BILLING CODE 6450–01–P**

## DEPARTMENT OF ENERGY

### Ultra-Deepwater Advisory Committee

**AGENCY:** Department of Energy, Office of Fossil Energy.

**ACTION:** Notice of open meeting.

This notice announces a meeting of the Ultra-Deepwater Advisory Committee. Federal Advisory Committee Act (Pub. L. 92–463, 86 Stat.

770) requires that notice of these meetings be announced in the **Federal Register**.

**DATES:** Wednesday, October 15, 2008, 8 a.m. to 12 p.m.; 1 p.m. to 5 p.m.

**ADDRESSES:** Crowne Plaza Houston North Greenspoint, 425 North Sam Houston Parkway, Houston, TX 77067.

**FOR FURTHER INFORMATION CONTACT:** Elena Melchert, U.S. Department of Energy, Office of Oil and Natural Gas, Washington, DC 20585. Phone: 202–586–5600.

**SUPPLEMENTARY INFORMATION:**

*Purpose of the Committee:* The purpose of the Ultra-Deepwater Advisory Committee is to provide advice on development and implementation of programs related to ultra-deepwater natural gas and other petroleum resources to the Secretary of Energy; provide comments and recommendations and priorities for the Department of Energy Annual Plan per requirements of the Energy Policy Act of 2005, Title IX, Subtitle J, Section 999.

*Tentative Agenda*

7:30 a.m.–8 a.m. Registration
8 a.m.–12 p.m. Welcome & Introductions, Opening Remarks by the Designated Federal Officer and by the Chair, Subcommittee presentations and reports.
1 p.m.–4:30 p.m. Facilitated Discussions by the members regarding Subcommittee reports; approval of final Committee recommendations, and instructions to the Editing Subcommittee.
4:30 p.m.–5 p.m. Public Comments
5 p.m. Adjourn

*Public Participation:* The meeting is open to the public. The Designated Federal Officer, the Chairman of the Committee, and a Facilitator will lead the meeting for the orderly conduct of business. If you would like to file a written statement with the Committee, you may do so either before or after the meeting. If you would like to make oral statements regarding any of the items on the agenda, you should contact Elena Melchert at the address or telephone number listed above. You must make your request for an oral statement at least five business days prior to the meeting, and reasonable provisions will be made to include the presentation on the agenda. Public comment will follow the 10 minute rule.

*Minutes:* The minutes of this meeting will be available for public review and copying within 60 days at the Freedom of Information Public Reading Room, Room 1G–033, Forrestal Building, 1000 Independence Avenue, SW., Washington, DC, between 9 a.m. and 4 p.m., Monday through Friday, except federal holidays.

Issued at Washington, DC, on September 12, 2008.

**Rachel Samuel,**

*Deputy Committee Management Officer.*

[FR Doc. E8–21678 Filed 9–16–08; 8:45 am]

BILLING CODE 6450–01–P

## DEPARTMENT OF ENERGY

### Unconventional Resources Technology Advisory Committee

**AGENCY:** Department of Energy, Office of Fossil Energy.

**ACTION:** Notice of open meeting.

This notice announces a meeting of the Unconventional Resources Technology Advisory Committee. Federal Advisory Committee Act (Pub. L. 92–463, 86 Stat. 770) requires that notice of these meetings be announced in the **Federal Register**.

**DATES:** Thursday, October 16, 2008, 8 a.m. to 12 p.m.; 1 p.m. to 5 p.m.

**ADDRESSES:** Crowne Plaza Houston North Greenspoint, 425 North Sam Houston Parkway, Houston, TX 77060.

**FOR FURTHER INFORMATION CONTACT:** Elena Melchert, U.S. Department of Energy, Office of Oil and Natural Gas, Washington, DC 20585. Phone: 202–586–5600.

**SUPPLEMENTARY INFORMATION:**

*Purpose of the Committee:* The purpose of the Unconventional Resources Technology Advisory Committee is to provide advice on development and implementation of programs related to onshore unconventional natural gas and other petroleum resources to the Secretary of Energy; and provide comments and recommendations and priorities for the Department of Energy Annual Plan per requirements of the Energy Policy Act of 2005, Title IX, Subtitle J, Section 999.

*Tentative Agenda*

7:30 a.m.–8 a.m. Registration
8 a.m.–12 p.m. Welcome and Introductions, Opening Remarks by the Designated Federal Officer and by the Chair, Subcommittee presentations and reports.
1 p.m.–4:30 p.m. Facilitated Discussions by the members regarding Subcommittee reports; approval of final Committee recommendations, and instructions to the Editing Subcommittee.
4:30 p.m.–5 p.m. Public Comments
5 p.m. Adjourn

*Public Participation:* The meeting is open to the public. The Designated Federal Officer, the Chairman of the Committee, and a Facilitator will lead the meeting for the orderly conduct of business. If you would like to file a written statement with the Committee, you may do so either before or after the meeting. If you would like to make oral statements regarding any of the items on the agenda, you should contact Elena Melchert at the address or telephone number listed above. You must make your request for an oral statement at least five business days prior to the meeting, and reasonable provisions will be made to include the presentation on the agenda. Public comment will follow the 10 minute rule.

*Minutes:* The minutes of this meeting will be available for public review and copying within 60 days at the Freedom of Information Public Reading Room, Room 1G–033, Forrestal Building, 1000 Independence Avenue, SW., Washington, DC, between 9 a.m. and 4 p.m., Monday through Friday, except federal holidays.

Issued at Washington, DC, on September 12, 2008.

**Rachel Samuel,**

*Deputy Committee Management Officer.*

[FR Doc. E8–21677 Filed 9–16–08; 8:45 am]

BILLING CODE 6450–01–P

## DEPARTMENT OF ENERGY

### Federal Energy Regulatory Commission

### Combined Notice of Filings # 2

September 4, 2008.

Take notice that the Commission received the following exempt wholesale generator filings:

*Docket Numbers:* EG08–93–000.

*Applicants:* Greenfield Energy Centre, LP.

*Description:* Notice of Self-Certification of Exempt Wholesale Generator Status.

*Filed Date:* 09/03/2008.

*Accession Number:* 20080903–5088.

*Comment Date:* 5 p.m. Eastern Time on Wednesday, September 24, 2008.

Take notice that the Commission received the following electric rate filings:

*Docket Numbers:* ER91–569–043; ER02–862–011; ER01–666–011.

*Applicants:* Entergy Services, Inc.; Entergy Power Ventures, L.P.; EWO Marketing, LP; Entergy Power, Inc.

*Description:* Entergy Operating Companies *et al.* submits updated market power analysis to support the continued allowance of market-based rates pursuant to Order 697–A.

*Filed Date:* 08/29/2008.
*Accession Number:* 20080903–0081.
*Comment Date:* 5 p.m. Eastern Time on Tuesday, October 28, 2008.

*Docket Numbers:* ER94–1188–045; ER98–1279–016; ER98–4540–014; ER99–1623–014.
*Applicants:* LG&E Energy Marketing Inc., Louisville Gas & Electric Company, Kentucky Utilities Company, Western Kentucky Energy Corporation.
*Description:* LG&E Energy Marketing Inc. *et al.* submits their updated market power analysis in support of their continued authority to sell, capacity and ancillary services under their market-based rate tariffs under ER94–1188 *et al.* (exe *et al.* files not loaded).
*Filed Date:* 09/02/2008.
*Accession Number:* 20080903–0257.
*Comment Date:* 5 p.m. Eastern Time on Tuesday, September 23, 2008.

*Docket Numbers:* ER96–2652–057; ER99–4229–010; ER99–4228–010; ER99–852–011; ER08–589–002; ER99–666–007; ER08–293–002; ER08–297–002; ER99–3693–006.
*Applicants:* CL Power Sales Eight, L.L.C.; CP Power Sales Seventeen, L.L.C.; CP Power Sales Nineteen, L.L.C.; Edison Mission Marketing & Trading, Inc.; Edison Mission Solutions, L.L.C.; EME HOMER CITY GENERATION LP; Forward Windpower, LLC; Lookout Windpower, LLC; CP Power Sales Twenty, L.L.C.; Midwest Generation, LLC.
*Description:* The EME Companies submits its market power analysis for the Northeast markets as well as market-based rate tariffs, and the Affidavit and Exhibits of Julie R Solomon etc.
*Filed Date:* 08/29/2008.
*Accession Number:* 20080903–0141.
*Comment Date:* 5 p.m. Eastern Time on Tuesday, October 28, 2008.

*Docket Numbers:* ER01–205–030; ER98–2640–029; ER98–4590–026; ER99–1610–034;
*Applicants:* Xcel Energy Services Inc.; Northern States Power Company and Northe; Public Service Company of Colorado; Southwestern Public Service Company.
*Description:* Xcel Energy Services Inc. submits a Change in Status Report Compliance Filing and an errata on this filing on 8/27/08.
*Filed Date:* 08/20/2008; 08/27/08.
*Accession Number:* 20080820–5113; 20080827–5075.
*Comment Date:* 5 p.m. Eastern Time on Wednesday, September 17, 2008.

*Docket Numbers:* ER04–1099–005; ER00–1115–007; ER04–1080–005; ER00–3562–007; ER04–831–006; ER03–446–006; ER03–209–006; ER05–819–004; ER05–820–004; ER02–1959–006; ER06–741–004; ER06–742–004; ER04–1100–005; ER02–1319–007.
*Applicants:* Bethpage Energy Center 3, LLC; Calpine Construction Finance Company, LP; Calpine Energy Management, L.P.; Calpine Energy Services LP; Calpine Newark, LLC; Calpine Philadelphia, Inc; CES Marketing V, L.P.; CES Marketing IX, LLC; CES Marketing X, LLC; CPN BETHPAGE 3RD TURBINE, INC; KIAC PARTNERS; NISSEQUOGUE COGEN PARTNERS; TBG COGEN PARTNERS; Zion Energy LLC.
*Description:* Updated Market Power Analysis, Order 697-A Compliance Filing, and Market-Based Rate Tariff Revisions of Bethpage Energy Center 3, LLC *et al.*
*Filed Date:* 09/02/2008.
*Accession Number:* 20080904–0513.
*Comment Date:* 5 p.m. Eastern Time on Tuesday, September 23, 2008.

*Docket Numbers:* ER06–739–017; ER06–738–017; ER03–983–015; ER07–501–015; ER02–537–019; ER08–649–009.
*Applicants:* East Coast Power Linden Holding, LLC; Cogen Technologies Linden Venture, L.P.; Fox Energy Company LLC; Birchwood Power Partners, L.P.; Shady Hills Power Company, L.L.C.; EFS Parlin Holdings, LLC.
*Description:* Substitute to August 28 Notice of Non-Material Change in Status of East Coast Power Liden Holding, LLC, *et al.*
*Filed Date:* 09/03/2008.
*Accession Number:* 20080903–5109.
*Comment Date:* 5 p.m. Eastern Time on Wednesday, September 24, 2008.

*Docket Numbers:* ER07–188–005.
*Applicants:* Duke Energy Carolinas, LLC.
*Description:* Duke Energy Carolinas, LLC submits an updated market power analysis focusing on the generation owner and controlled in the Southeast Region.
*Filed Date:* 08/29/2008.
*Accession Number:* 20080903–0312.
*Comment Date:* 5 p.m. Eastern Time on Friday, September 19, 2008.

*Docket Numbers:* ER08–513–001.
*Applicants:* Entergy Services, Inc.
*Description:* Entergy Operating Companies submits proposed revisions to Attachment V of their Open Access Transmission tariff, FERC Electric Tariff, Third Revised Volume 3.
*Filed Date:* 08/29/2008.
*Accession Number:* 20080903–0080.
*Comment Date:* 5 p.m. Eastern Time on Friday, September 19, 2008.

*Docket Numbers:* ER08–1326–001.
*Applicants:* NAEA Newington Energy, LLC.
*Description:* NAEA Newington Energy LLC submits revisions to their market-based rate tariff designated as Origonal Sheet 1 *et al.* to FERC Electric Tariff, Volume 1 under ER08–1326.
*Filed Date:* 08/29/2008.
*Accession Number:* 20080903–0104.
*Comment Date:* 5 p.m. Eastern Time on Friday, September 19, 2008.

*Docket Numbers:* ER08–1372–002.
*Applicants:* E. ON U.S. LLC.
*Description:* Louisville Gas and Electric Co and Kentucky Utilities Co. submit an amendment to its Schedule 1 filing filed 8/8/08.
*Filed Date:* 08/29/2008.
*Accession Number:* 20080903–0102.
*Comment Date:* 5 p.m. Eastern Time on Friday, September 19, 2008.

*Docket Numbers:* ER08–1457–001.
*Applicants:* PPL Electric Utilities Corporation.
*Description:* PPL Electric Utilities Corp submits a Substitute Exhibit PPL–103.
*Filed Date:* 08/29/2008.
*Accession Number:* 20080903–0103.
*Comment Date:* 5 p.m. Eastern Time on Friday, September 19, 2008.

*Docket Numbers:* ER08–1465–000.
*Applicants:* Southwest Power Pool, Inc.
*Description:* Southwest Power Pool, Inc. submits two executed Service Agreements for Network Integration Transmission Service.
*Filed Date:* 08/29/2008.
*Accession Number:* 20080903–0100.
*Comment Date:* 5 p.m. Eastern Time on Friday, September 19, 2008.

*Docket Numbers:* ER08–1466–000.
*Applicants:* New England Power Pool.
*Description:* New England Power Pool, Inc submits the NEPOOL Member Applications and Termination of NEPOOL Memberships.
*Filed Date:* 08/29/2008.
*Accession Number:* 20080903–0099.
*Comment Date:* 5 p.m. Eastern Time on Friday, September 19, 2008.

*Docket Numbers:* ER08–1468–000.
*Applicants:* Southern Indiana Gas & Electric Company.
*Description:* Southern Indiana Gas & Electric Co. submits a Single-Issue Section 205 filing to implement request for Order 679 transmission rate incentives.
*Filed Date:* 08/29/2008.
*Accession Number:* 20080903–0089.
*Comment Date:* 5 p.m. Eastern Time on Friday, September 19, 2008.

*Docket Numbers:* ER08–1469–000.
*Applicants:* Entergy Power, Inc.
*Description:* Entergy Power, Inc submits a long-term cost based capacity sale agreement with Merrill Lynch Commodities, Inc.

*Filed Date:* 08/29/2008.
*Accession Number:* 20080903–0098.
*Comment Date:* 5 p.m. Eastern Time on Friday, September 19, 2008.

*Docket Numbers:* ER08–1470–000.
*Applicants:* Virginia Electric and Power Company.
*Description:* Virginia Electric and Power Co. submits a Service Agreement for Wholesale Distribution Service.
*Filed Date:* 08/29/2008.
*Accession Number:* 20080903–0097.
*Comment Date:* 5 p.m. Eastern Time on Friday, September 19, 2008.

*Docket Numbers:* ER08–1471–000.
*Applicants:* PacifiCorp.
*Description:* PacifiCorp submits an updated Exhibit B to a Network Integration Transmission Service Agreement.
*Filed Date:* 08/29/2008.
*Accession Number:* 20080903–0096.
*Comment Date:* 5 p.m. Eastern Time on Friday, September 19, 2008.

*Docket Numbers:* ER08–1472–000.
*Applicants:* PacifiCorp.
*Description:* PacifiCorp submits Second Revised Sheet 355 *et al.* to FERC Electric Tariff, Seventh Revised Volume 11, to be effective 8/1/08.
*Filed Date:* 08/29/2008.
*Accession Number:* 20080903–0095.
*Comment Date:* 5 p.m. Eastern Time on Friday, September 19, 2008.

*Docket Numbers:* ER08–1473–000.
*Applicants:* PacifiCorp.
*Description:* PacifiCorp submits a Network Integration Transmission Service Agreement to be effective 9/1/08.
*Filed Date:* 08/29/2008.
*Accession Number:* 20080903–0094.
*Comment Date:* 5 p.m. Eastern Time on Friday, September 19, 2008.

*Docket Numbers:* ER08–1474–000.
*Applicants:* South Carolina Electric & Gas Company.
*Description:* South Carolina Electric & Gas Co. submits an executed revised Network Integration Transmission Service Agreement.
*Filed Date:* 08/29/2008.
*Accession Number:* 20080903–0093.
*Comment Date:* 5 p.m. Eastern Time on Friday, September 19, 2008.

*Docket Numbers:* ER08–1475–000.
*Applicants:* Cheyenne Light Fuel & Power Company.
*Description:* Cheyenne Light, Fuel and Power Co. submits a Renewable Energy Sales Agreement.
*Filed Date:* 08/29/2008.
*Accession Number:* 20080903–0092.
*Comment Date:* 5 p.m. Eastern Time on Friday, September 19, 2008.

*Docket Numbers:* ER08–1476–000.
*Applicants:* Duke Energy Carolinas, LLC.
*Description:* Duke Energy Carolinas, LLC submits a revised Network Integration Transmission Service Agreement.
*Filed Date:* 08/29/2008.
*Accession Number:* 20080903–0091.
*Comment Date:* 5 p.m. Eastern Time on Friday, September 19, 2008.

*Docket Numbers:* ER08–1477–000.
*Applicants:* Midwest Independent Transmission System.
*Description:* Midwest Independent Transmission System Operator, Inc. submits Large Generator Interconnection Agreement among American Transmission Company, LLC, Wisconsin Power and Light Co., & Midwest ISO, etc.
*Filed Date:* 08/29/2008.
*Accession Number:* 20080903–0109.
*Comment Date:* 5 p.m. Eastern Time on Friday, September 19, 2008.

*Docket Numbers:* ER08–1478–000.
*Applicants:* Black Hills Power, Inc.
*Description:* Black Hills Power, Inc. *et al.* submits an amendment to Schedule B to the Generation Dispatch and Energy Management Agreement.
*Filed Date:* 08/29/2008.
*Accession Number:* 20080903–0079.
*Comment Date:* 5 p.m. Eastern Time on Friday, September 19, 2008.

*Docket Numbers:* ER08–1479–000; ER08–1480–000.
*Applicants:* Progress Ventures, Inc.
*Description:* Progress Ventures, Inc. submits Notices of Cancellation of its market-based rate tariff.
*Filed Date:* 08/29/2008.
*Accession Number:* 20080903–0090.
*Comment Date:* 5 p.m. Eastern Time on Friday, September 19, 2008.

*Docket Numbers:* ER08–1481–000.
*Applicants:* EME Homer City Generation LP.
*Description:* The EME Companies submits a notice of cancellation of First Revised, Volume No. 2 of its market-based rate tariff.
*Filed Date:* 08/29/2008.
*Accession Number:* 20080903–0141.
*Comment Date:* 5 p.m. Eastern Time on Friday, September 19, 2008.

*Docket Numbers:* ER08–1482–000.
*Applicants:* Ameren Services Company.
*Description:* Illinois Power Co. submits an executed service agreement for Wholesale Distribution Service with Wabash Valley Power Association, Inc. as agent for MJM Electric Coop, Inc. *et al.*
*Filed Date:* 08/29/2008.
*Accession Number:* 20080903–0107.
*Comment Date:* 5 p.m. Eastern Time on Friday, September 19, 2008.

*Docket Numbers:* ER08–1483–000.
*Applicants:* Ameren Services Company.
*Description:* Central Illinois Public Service Co. submits an executed service agreement for Wholesale Distribution Service with Norris Electric Cooperative.
*Filed Date:* 08/29/2008.
*Accession Number:* 20080903–0101.
*Comment Date:* 5 p.m. Eastern Time on Friday, September 19, 2008.

*Docket Numbers:* ER08–1489–000.
*Applicants:* Southwest Power Pool, Inc.
*Description:* Southwest Power Pool, Inc. submits the Meter Agent Services Agreement.
*Filed Date:* 09/02/2008.
*Accession Number:* 20080903–0309.
*Comment Date:* 5 p.m. Eastern Time on Tuesday, September 23, 2008.

*Docket Numbers:* ER08–1491–000.
*Applicants:* PJM Interconnection, L.L.C.
*Description:* PJM Interconnection, LLC submits an executed interconnection service agreement.
*Filed Date:* 09/02/2008.
*Accession Number:* 20080903–0310.
*Comment Date:* 5 p.m. Eastern Time on Tuesday, September 23, 2008.

Any person desiring to intervene or to protest in any of the above proceedings must file in accordance with Rules 211 and 214 of the Commission's Rules of Practice and Procedure (18 CFR 385.211 and 385.214) on or before 5 p.m. Eastern time on the specified comment date. It is not necessary to separately intervene again in a subdocket related to a compliance filing if you have previously intervened in the same docket. Protests will be considered by the Commission in determining the appropriate action to be taken, but will not serve to make protestants parties to the proceeding. Anyone filing a motion to intervene or protest must serve a copy of that document on the Applicant. In reference to filings initiating a new proceeding, interventions or protests submitted on or before the comment deadline need not be served on persons other than the Applicant.

The Commission encourages electronic submission of protests and interventions in lieu of paper, using the FERC Online links at *http://www.ferc.gov.* To facilitate electronic service, persons with Internet access who will eFile a document and/or be listed as a contact for an intervenor must create and validate an eRegistration account using the eRegistration link. Select the eFiling link to log on and submit the intervention or protests.

Persons unable to file electronically should submit an original and 14 copies

of the intervention or protest to the Federal Energy Regulatory Commission, 888 First St., NE., Washington, DC 20426.

The filings in the above proceedings are accessible in the Commission's eLibrary system by clicking on the appropriate link in the above list. They are also available for review in the Commission's Public Reference Room in Washington, DC. There is an eSubscription link on the Web site that enables subscribers to receive e-mail notification when a document is added to a subscribed dockets(s). For assistance with any FERC Online service, please e-mail *FERCOnlineSupport@ferc.gov* or call (866) 208–3676 (toll free). For TTY, call (202) 502–8659.

**Nathaniel J. Davis, Sr.,**

*Deputy Secretary.*

[FR Doc. E8–21559 Filed 9–16–08; 8:45 am]

**BILLING CODE 6717–01–P**

## DEPARTMENT OF ENERGY

### Federal Energy Regulatory Commission

### Combined Notice of Filings, #1

September 11, 2008.

Take notice that the Commission received the following electric corporate filings:

*Docket Numbers:* EC08–122–000.

*Applicants:* Indeck Maine Energy, LLC, Indeck Energy Services, Inc., Ridgewood Maine, L.L.C., Covanta Energy Corporation.

*Description:* Indeck Maine Energy LLC *et al.* submit Joint Application for Authority to Transfer Jurisdictional Facilities and Request for Expedited Consideration and Waiver *et al.*

*Filed Date:* 09/04/2008.

*Accession Number:* 20080909–0082.

*Comment Date:* 5 p.m. Eastern Time on Thursday, September 25, 2008.

Take notice that the Commission received the following electric rate filings:

*Docket Numbers:* ER99–2342–012.

*Applicants:* Tampa Electric Company.

*Description:* Tampa Electric Co submits an updated market power analysis that demonstrates continued eligibility to sell electric capacity etc.

*Filed Date:* 09/02/2008.

*Accession Number:* 20080909–0061.

*Comment Date:* 5 p.m. Eastern Time on Tuesday, September 23, 2008.

*Docket Numbers:* ER01–2636–004.

*Applicants:* ALLETE, Inc.

*Description:* ALLETE, Inc request that the Commission provide for tariff revisions filed on 8/11/08 to become effective on such date the Midwest ISO has fully implemented the Ancillary Services Market.

*Filed Date:* 09/05/2008.

*Accession Number:* 20080909–0086.

*Comment Date:* 5 p.m. Eastern Time on Friday, September 26, 2008.

*Docket Numbers:* ER07–927–001.

*Applicants:* Entergy Services, Inc.

*Description:* Entergy Services Inc. submits a compliance refund report summarizing transmission rate refunds for June 1, 2007 through May 31, 2008.

*Filed Date:* 09/05/2008.

*Accession Number:* 20080909–0059.

*Comment Date:* 5 p.m. Eastern Time on Friday, September 26, 2008.

*Docket Numbers:* ER07–958–001, ER07–936–001.

*Applicants:* Rumford Power Inc., Tiverton Power Inc.

*Description:* Rumford Power Inc *et al.* submit a revised Appendix B with certain additional fields included in response to FERC's informal request for additional information re their 6/27/08 submission.

*Filed Date:* 09/05/2008.

*Accession Number:* 20080909–0084.

*Comment Date:* 5 p.m. Eastern Time on Friday, September 26, 2008.

*Docket Numbers:* ER07–1194–001.

*Applicants:* Castlebridge Energy Group LLC.

*Description:* Motion of Castlebridge Energy Group LLC for Determination of Category 1 Seller Status.

*Filed Date:* 08/13/2008.

*Accession Number:* 20080813–5058.

*Comment Date:* 5 p.m. Eastern Time on Monday, September 29, 2008.

*Docket Numbers:* ER08–953–002.

*Applicants:* Wisconsin Electric Power Company.

*Description:* Wisconsin Electric Power Company submits corrected tariff sheets to properly designate First Revised Rate Schedule 112.

*Filed Date:* 09/05/2008.

*Accession Number:* 20080909–0060.

*Comment Date:* 5 p.m. Eastern Time on Friday, September 26, 2008.

*Docket Numbers:* ER08–1210–001.

*Applicants:* Southern California Edison Company.

*Description:* Southern California Edison Co. submits an Amended and Restated Arizona Nuclear Power Project Hassayampa Switchyard Interconnection Agreement.

*Filed Date:* 09/08/2008.

*Accession Number:* 20080910–0072.

*Comment Date:* 5 p.m. Eastern Time on Monday, September 29, 2008.

*Docket Numbers:* ER08–1310–000.

*Applicants:* American Electric Power Service Corporation.

*Description:* Withdrawal of Application of American Electric Power Service Corporation for approval of limited notices to proceed or, in the alternative notice of cancellation on filed rate schedules.

*Filed Date:* 09/10/2008.

*Accession Number:* 20080910–5113.

*Comment Date:* 5 p.m. Eastern Time on Wednesday, October 01, 2008.

*Docket Numbers:* ER08–1425–001.

*Applicants:* ML Partnership, LLC.

*Description:* ML Partnership, LLC submits an updated Petition and FERC Electric Tariff Original Volume 1.

*Filed Date:* 09/08/2008.

*Accession Number:* 20080910–0071.

*Comment Date:* 5 p.m. Eastern Time on Monday, September 29, 2008.

*Docket Numbers:* ER08–1432–001.

*Applicants:* MS Solar Solutions Corp.

*Description:* MS Solar Solutions Corp resubmits Original Sheet 1 *et al.* to FERC Rate Schedule No. 1, effective 7/21/08, associated with the Notice of succession in ownership operation filed August 20, 2008.

*Filed Date:* 09/08/2008.

*Accession Number:* 20080910–0070.

*Comment Date:* 5 p.m. Eastern Time on Monday, September 29, 2008.

*Docket Numbers:* ER08–1485–000.

*Applicants:* Midwest Independent System Transmission Operator, Inc.

*Description:* Midwest ISO submits proposed revisions to the Credit Policy in Attachment L of the Midwest ISO's Open Access Transmission and Energy Markets Tariff, FERC Electric Tariff, Third Revised etc.

*Filed Date:* 08/29/2008.

*Accession Number:* 20080903–0301.

*Comment Date:* 5 p.m. Eastern Time on Friday, September 19, 2008.

*Docket Numbers:* ER08–1507–000.

*Applicants:* New York Independent System Operator, Inc., New York Power Authority.

*Description:* New York ISO *et al.* submits an Executed Standard Large Generator Interconnection Agreement with Noble Chateaugay Windpark, LLC.

*Filed Date:* 09/08/2008.

*Accession Number:* 20080910–0069.

*Comment Date:* 5 p.m. Eastern Time on Monday, September 29, 2008.

*Docket Numbers:* ER08–1508–000.

*Applicants:* California Independent System Operator Corporation.

*Description:* California Independent System Operator Corp submits proposed tariff revisions re 2009 CRR Release Process. On 9/9/08 a letter informing FERC that service of the 9/8/08 filing was actually made on 9/9/08 etc. was submitted.

*Filed Date:* 09/08/2008.

*Accession Number:* 20080910–0068.

*Comment Date:* 5 p.m. Eastern Time on Monday, September 29, 2008.

Take notice that the Commission received the following electric securities filings:

*Docket Numbers:* ES08–60–000.
*Applicants:* MidAmerican Energy Company.
*Description:* Application for Authorization to Issue and Sell up to $870 Million of Bonds, Notes, Debentures, Guarantees or Other Evidences of Long-Term Indebtedness.
*Filed Date:* 08/26/2008.
*Accession Number:* 20080826–5067.
*Comment Date:* 5 p.m. Eastern Time on Tuesday, September 16, 2008.

*Docket Numbers:* ES08–61–000.
*Applicants:* MidAmerican Energy Company.
*Description:* Application for Authorization to Issue and Sell up to $1.2 Billion of Promissory Notes or Other Evidences of Unsecured Short-Term Indebtedness.
*Filed Date:* 08/26/2008.
*Accession Number:* 20080826–5068.
*Comment Date:* 5 p.m. Eastern Time on Tuesday, September 16, 2008.

Take notice that the Commission received the following open access transmission tariff filings:

*Docket Numbers:* OA07–32–005.
*Applicants:* Entergy Services, Inc.
*Description:* Order No. 890 OATT Compliance Filing.
*Filed Date:* 09/05/2008.
*Accession Number:* 20080905–5148.
*Comment Date:* 5 p.m. Eastern Time on Friday, September 26, 2008.

*Docket Numbers:* OA08–151–000.
*Applicants:* Alcoa Power Generating Inc.—Yadkin.
*Description:* Order No. 890–B Compliance Filing.
*Filed Date:* 09/08/2008.
*Accession Number:* 20080908–5149.
*Comment Date:* 5 p.m. Eastern Time on Monday, September 29, 2008.

*Docket Numbers:* OA08–152–000.
*Applicants:* Ohio Valley Electric Corporation.
*Description:* Ohio Valley Electric Corporation's Order No. 890–B OATT Filing.
*Filed Date:* 09/08/2008.
*Accession Number:* 20080908–5150.
*Comment Date:* 5 p.m. Eastern Time on Monday, September 29, 2008.

Any person desiring to intervene or to protest in any of the above proceedings must file in accordance with Rules 211 and 214 of the Commission's Rules of Practice and Procedure (18 CFR 385.211 and 385.214) on or before 5 p.m. Eastern time on the specified comment date. It is not necessary to separately intervene again in a subdocket related to a compliance filing if you have previously intervened in the same docket. Protests will be considered by the Commission in determining the appropriate action to be taken, but will not serve to make protestants parties to the proceeding. Anyone filing a motion to intervene or protest must serve a copy of that document on the Applicant. In reference to filings initiating a new proceeding, interventions or protests submitted on or before the comment deadline need not be served on persons other than the Applicant.

The Commission encourages electronic submission of protests and interventions in lieu of paper, using the FERC Online links at *http://www.ferc.gov.* To facilitate electronic service, persons with Internet access who will eFile a document and/or be listed as a contact for an intervenor must create and validate an eRegistration account using the eRegistration link. Select the eFiling link to log on and submit the intervention or protests.

Persons unable to file electronically should submit an original and 14 copies of the intervention or protest to the Federal Energy Regulatory Commission, 888 First St., NE., Washington, DC 20426.

The filings in the above proceedings are accessible in the Commission's eLibrary system by clicking on the appropriate link in the above list. They are also available for review in the Commission's Public Reference Room in Washington, DC. There is an eSubscription link on the Web site that enables subscribers to receive e-mail notification when a document is added to a subscribed dockets(s). For assistance with any FERC Online service, please e-mail *FERCOnlineSupport@ferc.gov* or call (866) 208–3676 (toll free). For TTY, call (202) 502–8659.

**Nathaniel J. Davis, Sr.,**
*Deputy Secretary.*

[FR Doc. E8–21698 Filed 9–16–08; 8:45 am]

BILLING CODE 6717–01–P

## ENVIRONMENTAL PROTECTION AGENCY

**[EPA–HQ–OPP–2008–0453; FRL–8381–6]**

## Biobor Registration Review; Antimicrobial Pesticide Docket Opened for Review and Comment

**AGENCY:** Environmental Protection Agency (EPA).

**ACTION:** Notice.

**SUMMARY:** EPA has established a registration review docket for the pesticide listed in the table in Unit III.A. With this document, EPA is opening the public comment period for this registration review. Registration review is EPA's periodic review of pesticide registrations to ensure that each pesticide continues to satisfy the statutory standard for registration, that is, the pesticide can perform its intended function without unreasonable adverse effects on human health or the environment. Registration review dockets contain information that will assist the public in understanding the types of information and issues that the Agency may consider during the course of registration reviews. Through this program, EPA is ensuring that each pesticide's registration is based on current scientific and other knowledge, including its effects on human health and the environment.

**DATES:** Comments must be received on or before December 16, 2008.

**ADDRESSES:** Submit your comments identified by the docket identification (ID) number for the specific pesticide of interest provided in the table in Unit III.A., by one of the following methods:

- *Federal eRulemaking Portal*: *http://www.regulations.gov*. Follow the on-line instructions for submitting comments.
- *Mail*: Office of Pesticide Programs (OPP) Regulatory Public Docket (7502P), Environmental Protection Agency, 1200 Pennsylvania Ave., NW., Washington, DC 20460–0001.
- *Delivery*: OPP Regulatory Public Docket (7502P), Environmental Protection Agency, Rm. S–4400, One Potomac Yard (South Bldg.), 2777 S. Crystal Dr., Arlington, VA. Deliveries are only accepted during the Docket Facility's normal hours of operation (8:30 a.m. to 4 p.m., Monday through Friday, excluding legal holidays). Special arrangements should be made for deliveries of boxed information. The Docket Facility telephone number is (703) 305–5805.

*Instructions*: Direct your comments to the docket ID numbers listed in the table in Unit III.A. for the pesticides you are commenting on. EPA's policy is that all comments received will be included in the docket without change and may be made available on-line at *http://www.regulations.gov*, including any personal information provided, unless the comment includes information claimed to be Confidential Business Information (CBI) or other information whose disclosure is restricted by statute. Do not submit information that you consider to be CBI or otherwise

protected through regulations.gov or e-mail. The regulations.gov website is an ''anonymous access'' system, which means EPA will not know your identity or contact information unless you provide it in the body of your comment. If you send an e-mail comment directly to EPA without going through regulations.gov, your e-mail address will be automatically captured and included as part of the comment that is placed in the docket and made available on the Internet. If you submit an electronic comment, EPA recommends that you include your name and other contact information in the body of your comment and with any disk or CD-ROM you submit. If EPA cannot read your comment due to technical difficulties and cannot contact you for clarification, EPA may not be able to consider your comment. Electronic files should avoid the use of special characters, any form of encryption, and be free of any defects or viruses.

*Docket*: All documents in the docket are listed in the docket index available at *http://www.regulations.gov*. Although, listed in the index, some information is not publicly available, e.g., CBI or other information whose disclosure is restricted by statute. Certain other material, such as copyrighted material, is not placed on the Internet and will be publicly available only in hard copy form. Publicly available docket materials are available either in the electronic docket at *http://www.regulations.gov*, or, if only available in hard copy, at the OPP Regulatory Public Docket in Rm. S–4400, One Potomac Yard (South Bldg.), 2777 S. Crystal Dr., Arlington, VA. The hours of operation of this Docket Facility are from 8:30 a.m. to 4 p.m., Monday through Friday, excluding legal holidays. The Docket Facility telephone number is (703) 305–5805.

**FOR FURTHER INFORMATION CONTACT:** *For pesticide specific information contact*: The Chemical Review Manager identified in the table in Unit III.A. for the pesticide of interest.

*For general information contact*: Kevin Costello, Special Review and Reregistration Division (7508P), Office of Pesticide Programs, Environmental Protection Agency, 1200 Pennsylvania Ave., NW., Washington, DC 20460–0001; telephone number: (703) 305–5026; fax number: (703) 308–8090; e-mail address: *costello.kevin @epa.gov*.

**SUPPLEMENTARY INFORMATION:**

## I. General Information

### *A. Does this Action Apply to Me?*

This action is directed to the public in general, and may be of interest to a wide range of stakeholders including environmental, human health, farmworker, and agricultural advocates; the chemical industry; pesticide users; and members of the public interested in the sale, distribution, or use of pesticides. Since others also may be interested, the Agency has not attempted to describe all the specific entities that may be affected by this action. If you have any questions regarding the applicability of this action to a particular entity, consult the person listed under **FOR FURTHER INFORMATION CONTACT**.

### *B. What Should I Consider as I Prepare My Comments for EPA?*

1. *Submitting CBI*. Do not submit this information to EPA through regulations.gov or e-mail. Clearly mark the part or all of the information that you claim to be CBI. For CBI information in a disk or CD-ROM that you mail to EPA, mark the outside of the disk or CD-ROM as CBI and then identify electronically within the disk or CD-ROM the specific information that is claimed as CBI. In addition to one complete version of the comment that includes information claimed as CBI, a copy of the comment that does not contain the information claimed as CBI must be submitted for inclusion in the public docket. Information so marked will not be disclosed except in accordance with procedures set forth in 40 CFR part 2.

2. *Tips for preparing your comments*. When submitting comments, remember to:

i. Identify the document by docket ID number and other identifying information (subject heading, **Federal Register** date and page number).

ii. Follow directions. The Agency may ask you to respond to specific questions or organize comments by referencing a Code of Federal Regulations (CFR) part or section number.

iii. Explain why you agree or disagree; suggest alternatives and substitute language for your requested changes.

iv. Describe any assumptions and provide any technical information and/or data that you used.

v. If you estimate potential costs or burdens, explain how you arrived at your estimate in sufficient detail to allow for it to be reproduced.

vi. Provide specific examples to illustrate your concerns and suggest alternatives.

vii. Explain your views as clearly as possible, avoiding the use of profanity or personal threats.

viii. Make sure to submit your comments by the comment period deadline identified.

3. *Environmental justice*. EPA seeks to achieve environmental justice, the fair treatment and meaningful involvement of any group, including minority and/or low income populations, in the development, implementation, and enforcement of environmental laws, regulations, and policies. To help address potential environmental justice issues, the Agency seeks information on any groups or segments of the population who, as a result of their location, cultural practices, or other factors, may have atypical or disproportionately high and adverse human health impacts or environmental effects from exposure to the pesticide(s) discussed in this document, compared to the general population.

## II. Authority

EPA is initiating its review of the pesticide identified in this document pursuant to section 3(g) of the Federal Insecticide, Fungicide, and Rodenticide Act (FIFRA) and the Procedural Regulations for Registration Review at 40 CFR part 155, subpart C. Section 3(g) of FIFRA provides, among other things, that the registrations of pesticides are to be reviewed every 15 years. Under FIFRA section 3(a), a pesticide product may be registered or remain registered only if it meets the statutory standard for registration given in FIFRA section 3(c)(5). When used in accordance with widespread and commonly recognized practice, the pesticide product must perform its intended function without unreasonable adverse effects on the environment; that is, without any unreasonable risk to man or the environment, or a human dietary risk from residues that result from the use of a pesticide in or on food.

## III. Registration Reviews

### *A. What Action is the Agency Taking?*

As directed by FIFRA section 3(g), EPA is reviewing the pesticide registration identified in the table in this unit to assure that they continue to satisfy the FIFRA standard for registration—that is, they can still be used without unreasonable adverse effects on human health or the environment. A pesticide's registration review begins when the Agency establishes a docket for the pesticide's registration review case and opens the docket for public review and comment. At present, EPA is opening a registration review docket for the case identified in the following table.

TABLE—REGISTRATION REVIEW DOCKET OPENING

| Registration Review Case Name and Number | Docket ID Number | Chemical Review Manager, Telephone Number, E-mail Address |
|---|---|---|
| Biobor Case 3029 | EPA–HQ–OPP–2008–0453 | K. Avivah Jakob<br>(703) 305–1328<br>*jakob.kathryn@epa.gov* |

*B. Docket Content*

1. *Review dockets*. The registration review dockets contain information that the Agency may consider in the course of the registration review. The Agency may include information from its files including, but not limited to, the following information:

- An overview of the registration review case status.
- A list of current product registrations and registrants.
- **Federal Register** notices regarding any pending registration actions.
- **Federal Register** notices regarding current or pending tolerances.
- Risk assessments.
- Bibliographies concerning current registrations.
- Summaries of incident data.
- Any other pertinent data or information.

Each docket contains a document summarizing what the Agency currently knows about the pesticide case and a preliminary work plan for anticipated data and assessment needs. Additional documents provide more detailed information. During this public comment period, the Agency is asking that interested persons identify any additional information they believe the Agency should consider during the registration reviews of these pesticides. The Agency identifies in each docket the areas where public comment is specifically requested, though comment in any area is welcome.

2. *Other related information*. More information on these cases, including the active ingredients for each case, may be located in the registration review schedule on the Agency's website at *http://www.epa.gov/oppsrrd1/registration_review/schedule.htm* information on the Agency's registration review program and its implementing regulation may be seen at *http://www.epa.gov/oppsrrd1/registration_review*.

3. *Information submission requirements*. Anyone may submit data or information in response to this document. To be considered during a pesticide's registration review, the submitted data or information must meet the following requirements:

- To ensure that EPA will consider data or information submitted, interested persons must submit the data or information during the comment period. The Agency may, at its discretion, consider data or information submitted at a later date.
- The data or information submitted must be presented in a legible and useable form. For example, an English translation must accompany any material that is not in English and a written transcript must accompany any information submitted as an audiographic or videographic record. Written material may be submitted in paper or electronic form.
- Submitters must clearly identify the source of any submitted data or information.
- Submitters may request the Agency to reconsider data or information that the Agency rejected in a previous review. However, submitters must explain why they believe the Agency should reconsider the data or information in the pesticide's registration review.
- As provided in 40 CFR 155.58, the registration review docket for each pesticide case will remain publicly accessible through the duration of the registration review process; that is, until all actions required in the final decision on the registration review case have been completed.

**List of Subjects**

Environmental protection, Antimicrobials, Biobor, Pesticides and pests.

Dated: September 10, 2008.

**Betty Shackleford,**

*Acting Director, Antimicrobials Division, Office of Pesticide Programs.*

[FR Doc. E8–21709 Filed 9–16–08; 8:45 a.m.]

BILLING CODE 6560–50–S

## ENVIRONMENTAL PROTECTION AGENCY

**[EPA–HQ–OPP–2007–0037; FRL–8382–1]**

## Trichoderma Species and Linalool Final Registration Review Decision; Notice of Availability

**AGENCY:** Environmental Protection Agency (EPA).

**ACTION:** Notice.

**SUMMARY:** This notice announces the availability of EPA's final registration review decisions for the pesticides *Trichoderma* species (case 6050) and Linalool (case 6058). Registration review is EPA's periodic review of pesticide registrations to ensure that each pesticide continues to satisfy the statutory standard for registration, that is, that the pesticide can perform its intended function without unreasonable adverse effects on human health or the environment. Through this program, EPA is ensuring that each pesticide's registration is based on current scientific and other knowledge, including its effects on human health and the environment.

**ADDRESSES:** All documents in the docket are listed in the docket index available in regulations.gov. To access the electronic docket, go to *http://www.regulations.gov*, select ''Advanced Search,'' then ''Docket Search.'' Insert the docket ID number where indicated and select the ''Submit'' button. Follow the instructions on the regulations.gov website to view the docket index or access available documents. Although listed in the index, some information is not publicly available, e.g., CBI or other information whose disclosure is restricted by statute. Certain other material, such as copyrighted material, is not placed on the Internet and will be publicly available only in hard copy form. Publicly available docket materials are available either in the electronic docket at *http://www.regulations.gov*, or, if only available in hard copy, at the OPP Regulatory Public Docket in Rm. S–4400, One Potomac Yard (South Bldg.), 2777 S. Crystal Dr., Arlington, VA. The hours of operation of this Docket Facility are from 8:30 a.m. to 4 p.m., Monday through Friday, excluding legal holidays. The Docket Facility telephone number is (703) 305–5805.

**FOR FURTHER INFORMATION CONTACT:** For information about the biopesticides included in this document, contact the specific Regulatory contact, as identified in the Table in Unit II.A. for the pesticide of interest. The mailing address and additional contact information is Biopesticides and Pollution Prevention Division, (7511P);

Office of Pesticide Programs, Environmental Protection Agency, 1200 Pennsylvania Ave., NW., Washington, DC 20460–0001; telephone number: (703) 308–8712; fax number: (703) 308–7026.

For general questions on the registration review program, contact, Kevin Costello Special Review and Reregistration Division (7508P), Office of Pesticide Programs, Environmental Protection Agency, 1200 Pennsylvania Ave., NW., Washington, DC 20460–0001; telephone number: (703) 305–5026; fax number: (703) 308–8090; e-mail address: *costello.kevin@epa.gov*.

**SUPPLEMENTARY INFORMATION:**

## I. General Information

### *A. Does this Action Apply to Me?*

This action is directed to the public in general, and may be of interest to a wide range of stakeholders including environmental, human health, farm worker, and agricultural advocates; the chemical industry; pesticide users; and members of the public interested in the sale, distribution, or use of pesticides. Since others also may be interested, the Agency has not attempted to describe all the specific entities that may be affected by this action. If you have any questions regarding the applicability of this action to a particular entity, consult the person listed under **FOR FURTHER INFORMATION CONTACT**.

## II. Background

### *A. What Action is the Agency Taking?*

This notice announces the final registration decisions for Linalool and Trichlorderma species cases as shown in the following Table.

*Table 1—Registration Review Dockets – Final Decisions*

| Registration Review Case Name and Number | Pesticide Docket ID Number | Regulatory Contact name, Phone Number, E-mail Address |
|---|---|---|
| Linalool; Case 6058 | EPA–HQ–OPP–2006–0356 | Stephen Morrill<br>(703) 308–8319<br>*morrill.stephen@epa.gov* |
| *Trichoderma* species; Case 6050 | EPA–HQ–OPP–2006–0245 | Shanaz Bacchus<br>(703) 308–8097<br>*bacchus.shanaz@epa.gov* |

The dockets for registration review of these pesticide cases include the final registration review decision documents as well as other relevant documents related to the registration review of the subject cases. Proposed registration review decisions were posted to the docket and public comments were requested. During the respective 60 day comment periods, no public comments were received.

Background on the registration review program is provided at: *http://www.epa.gov/oppsrrd1/registration_review/*. Quick links to earlier documents related to the registration review of this pesticide are provided at: *http://www.epa.gov/oppsrrd1/registration_review/reg_review_status.htm*

### *B. What is the Agency's Authority for Taking this Action?*

FIFRA Section 3(g) and 40 CFR 155.58(c) provide authority for this action. A registration review decision is the Agency's determination whether a pesticide meets, or does not meet the standard for registration in FIFRA. Proposed registration review decisions were posted to the docket for the above cases and public comments were requested. During the respective 60 day comment periods, no public comments were received for the *Trichoderma* species and Linalool cases. The final decisions that are subject to this notice continue to be supported by the rationales included in the proposed registration review decisions for each case. The documents in the subject registration review dockets describe the Agency's rationale for issuing these final decisions for *Trichoderma* species and Linalool cases. No risk mitigation measures are required or specified in the final decisions for these registration review cases and no labeling changes are required as a result of these final decisions.

## List of Subjects

Environmental protection, Registration review, Pesticides and pests.

Dated: September 11, 2008.

**Janet L. Andersen,**

*Director, Biopesticides and Pollution Prevention Division, Office of Pesticide Programs.*

[FR Doc. E8–21710 Filed 9–16–08; 8:45 am]

BILLING CODE 6560–50–S

---

## ENVIRONMENTAL PROTECTION AGENCY

**[FRL–8716–7]**

## Coastal Elevations and Sea Level Rise Advisory Committee Meeting

**AGENCY:** Environmental Protection Agency (EPA).

**ACTION:** Notice of meeting.

**SUMMARY:** Under the Federal Advisory Committee Act (Pub. L. 92–463), EPA gives notice of a public meeting of the Coastal Elevations and Sea Level Rise Advisory Committee (CESLAC).

**DATES:** The meeting will be held on Thursday, October 16, 2008, from 9 a.m. to 5 p.m., although the meeting may be adjourned prior to this time if the committee has completed its business. Registration will begin at 8:30 a.m.

**ADDRESSES:** The meeting will be held at the Crowne Plaza Washington National Airport Hotel, 1480 Crystal Drive, Arlington, Virginia 22202.

**FOR FURTHER INFORMATION CONTACT:** Jack Fitzgerald, Designated Federal Officer, Climate Change Division, Mail Code 6207J, Office of Atmospheric Programs, Environmental Protection Agency, 1200 Pennsylvania Avenue, NW., Washington, DC 20460; e-mail address: *Fitzgerald.jack@epa.gov,* telephone number (202) 343–9336, fax: (202) 343–2337.

**SUPPLEMENTARY INFORMATION:** The purpose of CESLAC is to provide advice on a study titled *Coastal Elevations and Sensitivity to Sea Level Rise* being conducted as part of the U.S. Climate Change Science Program (CCSP). A copy of the study prospectus is available at *http://www.climatescience.gov/Library/sap/sap4-1/default.php.* A copy of the Committee Charter is available at *http://www.fido.gov/facadatabase/.* The meeting will focus on consideration of Chapter 1 of the study as well as CESLAC's final report. Materials that will be considered in the meeting may be found at *http://*

*www.environmentalinformation.net/CESLAC/* approximately two weeks before the meeting. If a printed copy of the material is needed, please contact Ms. Nicole Kalas by: (1) E-mail at *NKalas@stratusconsulting.com;* (2) phone at (202) 466–3731, ext. 239; 3) mail at Stratus Consulting, 1920 L St., NW., Suite 420, Washington, DC 20036. Based on the extent of public participation in previous meetings of CESLAC, thirty minutes of this meeting will be allocated for statements by members of the public. Individuals who are interested in making statements should inform Jack Fitzgerald of their interest by Thursday, October 2, and provide a copy of their statements for the record. Individuals will be scheduled in the order that their statements of intent to present are received. A minimum of three minutes will be provided for each statement. The maximum amount of time will depend on the number of statements to be made. All statements, regardless of whether there is sufficient time to present them orally, will be included in the record and considered by the committee. To request accommodation of a disability, please also contact Jack Fitzgerald, preferably at least ten days prior to the meeting, to give EPA as much time as possible to process your request.

Dated: September 10, 2008.

**Jack Fitzgerald,**

*Designated Federal Officer.*

[FR Doc. E8–21734 Filed 9–16–08; 8:45 am]

**BILLING CODE 6560–50–P**

## ENVIRONMENTAL PROTECTION AGENCY

**[FRL–8716–6]**

## Notice of Public Meeting of the Interagency Steering Committee on Radiation Standards

**AGENCY:** Environmental Protection Agency.

**ACTION:** Notice of public meeting.

**SUMMARY:** The Environmental Protection Agency (EPA) will host a meeting of the Interagency Steering Committee on Radiation Standards (ISCORS) on October 1, 2008, in Washington, DC. The purpose of ISCORS is to foster early resolution and coordination of regulatory issues associated with radiation standards. Agencies represented as members of ISCORS include the following: EPA; Nuclear Regulatory Commission; Department of Energy; Department of Defense; Department of Transportation; Department of Homeland Security; Department of Labor's Occupational Safety and Health Administration; and the Department of Health and Human Services. ISCORS meeting observer agencies include the Office of Science and Technology Policy, Office of Management and Budget, Defense Nuclear Facilities Safety Board, as well as representatives from both the States of Illinois and Pennsylvania. ISCORS maintains several objectives: Facilitate a consensus on allowable levels of radiation risk to the public and workers; promote consistent and scientifically sound risk assessment and risk management approaches in setting and implementing standards for occupational and public protection from ionizing radiation; promote completeness and coherence of Federal standards for radiation protection; and identify interagency radiation protection issues and coordinate their resolution. ISCORS meetings include presentations by the chairs of the subcommittees and discussions of current radiation protection issues. Committee meetings normally involve pre-decisional intra-governmental discussions and, as such, are normally not open for observation by members of the public or media. One of the four ISCORS meetings each year is open to all interested members of the public. There will be time on the agenda for members of the public to provide comments. Summaries of previous ISCORS meetings are available at the ISCORS Web site, *http://www.iscors.org*. The final agenda for the October 2008 meeting will be posted on the Web site shortly before the meeting.

**DATES:** The meeting will be held on October 1, 2008, from 1 p.m. to 4 p.m.

**ADDRESSES:** The ISCORS meeting will be held in Room 1153 of the EPA East building at 1201 Constitution Avenue, NW., Washington, DC 20460. Attendees are required to present a photo ID such as a government agency photo identification badge or valid driver's license. Visitors and their belongings will be screened by EPA security guards. Visitors must sign the visitors log at the security desk and will be issued a visitors badge by the security guards to gain access to the meeting.

**FOR FURTHER INFORMATION CONTACT:** Marisa Savoy, Radiation Protection Division, Office of Radiation and Indoor Air, Mailcode 6608J, Environmental Protection Agency, 1200 Pennsylvania Avenue, NW., Washington, DC 20460; telephone 202–343–9237; fax 202–343–2302; e-mail address *savoy.marisa@epa.gov*.

**SUPPLEMENTARY INFORMATION:** Visitor parking around the EPA East building is limited; however, the EPA East building is located adjacent to the Federal Triangle metro stop on the Blue and Orange Lines. Visit the ISCORS Web site, *http://www.iscors.org* for more detailed information.

Dated: September 10, 2008.

**Jonathan Edwards,**

*Acting Director, Office of Radiation and Indoor Air.*

[FR Doc. E8–21714 Filed 9–16–08; 8:45 am]

**BILLING CODE 6560–50–P**

## ENVIRONMENTAL PROTECTION AGENCY

**[FRL–8717–1]**

## NPDES Program Management Information Rule

**AGENCY:** Environmental Protection Agency.

**ACTION:** Notice of meeting.

**SUMMARY:** The United States Environmental Protection Agency (EPA) gives notice of a meeting to discuss the NPDES Program Management Information Rule. This meeting will be a session at which EPA will present possible options for the proposed rule. The purpose of this meeting is to give interested parties an opportunity to discuss the proposed rule options and to provide EPA comments on the presented options.

**DATES:** The meeting will be held on Tuesday, October 14, 2008 from 1 p.m. to 5 p.m. EST.

**ADDRESSES:** The meeting location is EPA East Room 1153, 1201 Constitution Ave., NW., Washington, DC 20460. Participants may call into the meeting at 1–866–212–1875, access code: 835325#.

**FOR FURTHER INFORMATION CONTACT:** Lauren Spath at 202–565–0016 or *spath.lauren@epa.gov.* Please reply by September 30, 2008 if you plan on calling in or attending this meeting.

**SUPPLEMENTARY INFORMATION:** This meeting will be open to all stakeholders interested in the rule EPA is developing to gather NPDES program management information. After considerable dialogue with NPDES authorized states, the Association of State and Interstate Water Pollution Control Administrators, and the Environmental Council of States, EPA decided to develop a proposed rulemaking in order to ensure that the site specific information essential to manage the national NPDES program, thereby ensuring protection of public health and the environment, is available on a nationally consistent, timely, accurate, and complete basis.

Dated: September 10, 2008.

**Lisa Lund,**

*Director, Office of Compliance.*

[FR Doc. E8–21725 Filed 9–16–08; 8:45 am]

**BILLING CODE 6560–50–P**

## ENVIRONMENTAL PROTECTION AGENCY

**[EPA–R05–RCRA–2008–0568; FRL–8716–9]**

## Pre-Renovation Education Program; State of Michigan Authorization Application

**AGENCY:** Environmental Protection Agency (EPA).

**ACTION:** Notice; request for comments and opportunity for public hearing.

**SUMMARY:** On June 20, 2008, the State of Michigan submitted an application under section 404 of the Toxic Substances Control Act (TSCA) requesting authorization to administer and enforce requirements for a pre-renovation education program in accordance with section 406(b) of TSCA. This program ensures that owners and occupants of target housing are provided information concerning potential hazards of lead-based paint exposure before certain renovations are begun. This notice announces receipt of the State of Michigan's application and program self-certification, EPA's determination that the Michigan application is complete, and provides a 45-day public comment period and opportunity to request a public hearing. Michigan has self-certified that its pre-renovation education program is at least as protective of human health and the environment as the federal program complying with the requirements for self-certification. Therefore, pursuant to section 404 of TSCA the Michigan pre-renovation education program is deemed authorized until such time as the Agency disapproves the program application or withdraws the program authorization. If EPA subsequently finds that the program does not meet all the requirements for an authorized State program, EPA will work with the State to correct any deficiencies in order to approve the program. If the deficiencies are not corrected a notice of disapproval will be issued in the **Federal Register** and a Federal program will be implemented in the State.

**DATES:** Comments, identified by docket control number EPA–R05–RCRA–2008–0568, must be received on or before November 3, 2008. In addition, a public hearing request must be submitted on or before October 2, 2008.

**ADDRESSES:** Comments, and requests for a public hearing may also be submitted by mail, electronically, or in person. Please follow the detailed instructions for each method as provided in section I of the **SUPPLEMENTARY INFORMATION**. To ensure proper receipt by EPA, it is imperative that you identify docket control number EPA–R05–RCRA–2008–0568 in the subject line on the first page of your response.

**FOR FURTHER INFORMATION CONTACT:** Ludmilla Koralewska, Technical Contact, LCD, Toxics Section, United States Environmental Protection Agency, 77 W. Jackson, Chicago, IL 60604, telephone number: (312) 886–3577; e-mail address: *koralewska.ludmilla@epa.gov.*

**SUPPLEMENTARY INFORMATION:**

### I. General Information

*A. Does This Action Apply to Me?*

This action is directed to the public in general. This action may, however, be of interest to firms and individuals engaged in renovation and remodeling activities of pre-1978 housing in the State of Michigan. Since other entities may also be interested, the Agency has not attempted to describe all the specific entities that may be affected by this action. If you have any questions regarding the applicability of this action to a particular entity, consult the person listed under **FOR FURTHER INFORMATION CONTACT**.

*B. How Can I Get Additional Information, Including Copies of This Document or Other Related Documents?*

You may obtain electronic copies of this document, and certain other related documents that might be available electronically, from the EPA Internet Home Page at *http://www.epa.gov/*. To access this document select ''Laws and Regulations,'' ''Regulations and Proposed Rules,'' and then look up the entry for this document under the ''**Federal Register**—Environmental Documents.'' You can also go directly to the **Federal Register** listings at *http://www.epa.gov/fedrgstr/.*

2. *In person:* You may read this document by visiting the Michigan Department of Community Health Library, Capitol View Building 201 Townsend St., 2nd Floor, Lansing, MI 48913, contact phone number (517) 335–8466. Also, EPA has established an official record for this action under docket control number EPA–R05–RCRA–2008–0568. The official record consists of the documents specifically referenced in this action, this notice, the State of Michigan 406(b) program authorization application, any public comments received during an applicable comment period, and other information related to this action, including any information claimed as Confidential Business information (CBI).

*C. How and to Whom Do I Submit Comments?*

You may submit comments through the mail, in person, or electronically. To ensure proper receipt by EPA, it is imperative that you identify docket control number EPA–R05–RCRA–2008–0568 in the subject line on the first page of your response.

1. *By mail:* Submit your comments and hearing requests to: Ludmilla Koralewska, Technical Contact, LCD, Toxics Section, U.S. Environmental Protection Agency, 77 W. Jackson, Chicago, IL 60604.

2. *By person or courier:* Deliver your comments and hearing requests to: U.S. EPA Region 5, LCD, Toxics Section, 77 W. Jackson, Chicago, IL 60604. The Regional office is open from 8 a.m. to 5 p.m., Monday through Friday, excluding legal holidays. The phone for the regional office is (312) 886–6003.

3. *Electronically:* You may submit your comments and hearing requests electronically by e-mail to: *koralewska.ludmilla@epa.gov* or mail your computer disk to the address identified above. Do not submit any information electronically that you consider to be Confidential Business Information (CBI). Electronic comments must be submitted as an ASCII file avoiding the use of special characters and any form of encryption. Comments and data will also be accepted on standard disks in Microsoft Word or ASCII file format.

*D. How Should I Handle CBI Information That I Want To Submit To the Agency?*

Do not submit any information that you consider to be CBI. You may claim information that you submit to EPA in response to this document as CBI by marking any part or all of that information as CBI. Information so marked will not be disclosed except in accordance with procedures set forth in 40 CFR part 2. In addition to one complete version of the comment that includes any information claimed as CBI, a copy of the comment that does not contain the information claimed as CBI must be submitted for inclusion in the public version of the official record. Information not marked confidential will be included in the public version of the official record without prior notice. If you have any questions about CBI or the procedures for claiming CBI, please consult the technical person

identified under **FOR FURTHER INFORMATION CONTACT**.

*E. What Should I Consider as I Prepare My Comments for EPA?*

You may find the following suggestions helpful for preparing your comments.

1. Explain your views as clearly as possible.
2. Describe any assumptions that you used.
3. Provide copies of any technical information and/or data you used that support your views.
4. If you estimate potential burden or costs, explain how you arrived at the estimate that you provide.
5. Provide specific examples to illustrate your concerns.
6. Offer alternative ways to improve the notice or collection activity.
7. Make sure to submit your comments by the deadline in this notice.
8. To ensure proper receipt by EPA, identify the docket control number assigned to this action in the subject line on the first page of your response. You may also provide the name, date, and **Federal Register** citation.

**II. Background**

*A. What Action Is the Agency Taking?*

On June 20, 2008, the State of Michigan submitted an application under section 404 of the Toxic Substances Control Act (TSCA) requesting authorization to administer and enforce requirements for pre-renovation education in accordance with section 406(b) of TSCA. This program ensures that owners and occupants of target housing are provided information concerning potential hazards of lead-based paint exposure before certain renovations are begun. Michigan has self-certified that its pre-renovation education program is at least as protective as the federal program. Therefore, pursuant to section 404 of TSCA, and 40 CFR 745.324(d)(1) and (e)(2) the Michigan pre-renovation education program is deemed authorized as of the date of submission and until such time as the Agency disapproves the program application or withdraws program authorization. If EPA subsequently finds that the program does not meet all the requirements for an authorized State program, EPA intends to work with the State of Michigan to correct any program deficiencies in order to approve the program. If the deficiencies are not corrected, a notice of disapproval will be issued in the **Federal Register** and a Federal program will be implemented in the State. Pursuant to section 404(b) of TSCA [15 U.S.C. 2684(b)], EPA provides notice and an opportunity for a public hearing on a State program application before approving the program. Therefore, by this notice EPA is soliciting public comment on whether the State of Michigan application meets the requirements for EPA approval. This notice also provides an opportunity to request a public hearing on the application. If a hearing is required and granted, EPA will issue a **Federal Register** notice announcing the date, time and place of the hearing and EPA's final decision on the application will also then be published in the **Federal Register**.

*B. What Is the Agency's Authority for Taking This Action?*

On October 28, 1992, the Housing and Community Development Act of 1992, Public Law 102–550, became law. Title X of that statute was the Residential Lead-Based Paint Hazard Reduction Act of 1992. That Act amended TSCA (15 U.S.C. 2601 *et seq.*) by adding Title IV (15 U.S.C. 2681–2692), entitled Lead Exposure Reduction. In the **Federal Register** of June 1, 1998, (63 FR 29908), EPA promulgated final TSCA section 406(b) regulations governing pre-renovation education requirements in target housing. This program ensures that owners and occupants of target housing are provided information concerning potential hazards of lead-based paint exposure before certain renovations are begun on that housing. In addition to providing general information on the health hazards associated with exposure to lead, the lead hazard information pamphlet advises owners and occupants to take appropriate precautions to avoid exposure to lead-contaminated dust and debris that are sometimes generated during renovations. EPA believes that distribution of the pamphlet will help to reduce the exposures that cause serious lead poisonings, especially in children under age 6, who are particularly susceptible to the hazards of lead. Under section 404 of TSCA (15 U.S.C. 2684), a State may seek authorization from EPA to administer and enforce its own pre-renovation education program in lieu of the Federal program. The regulations governing the authorization of a State program under both sections 402 and 406 of TSCA are codified at 40 CFR part 745, subpart Q. States that choose to apply for program authorization must submit a complete application to the appropriate regional EPA office for review. Those applications will be reviewed by EPA within 180 days of receipt of the complete application. To receive EPA approval, a State must demonstrate that its program is at least as protective of human health and the environment as the Federal program, and provides for adequate enforcement section 404(b) of TSCA [15 U.S.C. 2884(b)]. EPA's regulations 40 CFR part 745, subpart Q provide the detailed requirements a State program must meet in order to obtain EPA approval. A State may choose to certify that its own pre-renovation education program meets the requirements for EPA approval, by submitting a letter signed by the Governor or Attorney General stating that the program is at least as protective of human health and the environment as the federal program and provides for adequate enforcement. Upon submission of such certification letter the program is deemed authorized pursuant to 40 CFR 745.3249(d)(1) and (e)(2) and [15 U.S.C. 2864(b)]. This authorization becomes ineffective, however, if EPA disapproves the application or withdraws the program authorization.

**III. State Program Description Summary**

The following is an excerption from the State's proposed Pre-Renovation Education program summary. To review the complete text see:

*B. How Can I Get Additional Information, Including Copies of This Document or Other Related Documents?*

Michigan Public Health Code, Act No. 368 of the Public Acts of 1978 assigns to the Michigan Department of Community Health (MDCH), among other responsibilities, the continuous and diligent endeavor to prevent disease, prolong life, and promote the public health through organized programs, including prevention and control of environmental health hazards; prevention and control of diseases; prevention and control of health problems of particularly vulnerable population groups. The department may exercise authority and promulgate rules to properly safeguard the public health; to prevent the spread of diseases and the existence of sources of contamination; and to implement and carry out the powers of and duties vested by law in the department. In response to the federal Pre-Renovation Education (PRE) Program information disclosure requirements, the State of Michigan in the Lead Hazard Control Rules states in R 325.99408(6)(a) that any person disturbing painted surfaces by performing renovation for compensation in target housing or child-

occupied facilities must provide the owner of the dwelling or facility with the EPA's pamphlet number EPA 747–K–99–001, entitled ''Protect Your Family From Lead in Your Home,'' or a true reproduction of the EPA pamphlet, or an equivalent pamphlet approved by the department. If the owner does not occupy the dwelling unit, then the person performing renovation shall also provide an adult occupant of the housing unit with the EPA pamphlet. Exceptions are: Emergency repairs, lead abatement projects, minor repairs, and work in zero-bedroom dwellings and housing for the elderly. Authority for enforcement actions is established for the Michigan Department of Community Health under sections 5466(1), 5473(a)(1), 5475(2), 5476(2) and 5477 of the Lead Abatement Act, being sections 333.5466, 333.5473(a), 333.5475, and 333.5476 of the Michigan Compiled Laws, and Rule 325.99104.

### IV. Federal Overfilling

Section 404(b) of TSCA makes it unlawful for any person to violate, or fail or refuse to comply with, any requirement of an approved State program. Therefore, EPA reserves the right to exercise its enforcement authority under TSCA against a violation of, or a failure or refusal to comply with, any requirement of an authorized State program.

Dated: August 27, 2008.

**Lynn Buhl,**

*Regional Administrator, Region 5.*

[FR Doc. E8–21711 Filed 9–16–08; 8:45 am]

**BILLING CODE 6560–50–P**

## ENVIRONMENTAL PROTECTION AGENCY

**[FRL–8716–8]**

## Proposed Agreement Pursuant to Section 122(h)(1) of the Comprehensive Environmental Response, Compensation, and Liability Act for the Bofors Nobel Site

**AGENCY:** Environmental Protection Agency (''EPA'').

**ACTION:** Notice; Request for public comment on proposed CERCLA 122(h)(1) agreement with Normand Phaneuf for the Bofors Nobel Superfund Site.

**SUMMARY:** In accordance with section 122(i)(1) of the Comprehensive Environmental Response, Compensation and Liability Act of 1980, as amended (''CERCLA''), notification is hereby given of a proposed administrative agreement concerning the Bofors Nobel hazardous waste site in Muskegon, Michigan (the ''Site''). EPA proposes to enter into this agreement under the authority of section 122(h) and 107 of CERCLA. The proposed agreement has been executed by Normand Phaneuf. (the ''Settling Party'').

Under the proposed agreement, the Settling Party will pay $50,000 to the Hazardous Substances Superfund to resolve EPA's claims against the Settling Party for response costs incurred by EPA at the Site. EPA has incurred response costs investigating and performing response actions at the Site, and overseeing response actions performed by other parties at the Site to mitigate potential imminent and substantial endangerments to human health or the environment presented or threatened by hazardous substances present at the Site.

For thirty days following the date of publication of this notice, the EPA will receive written comments relating to this proposed agreement. EPA will consider all comments received and may decide not to enter this proposed agreement if comments disclose facts or considerations which indicate that the proposed agreement is inappropriate, improper or inadequate.

**DATES:** Comments on the proposed agreement must be received by EPA on or before October 17, 2008.

**ADDRESSES:** Comments should be addressed to the Docket Clerk, U.S. Environmental Protection Agency, Region 5, 77 West Jackson Boulevard, Chicago, Illinois 60604–3590, and should refer to: In the Matter of Bofors Nobel Site, Chicago, Illinois, U.S. EPA Docket No. V–W–08C–889.

**FOR FURTHER INFORMATION CONTACT:** Thomas J. Krueger, U.S. Environmental Protection Agency, Office of Regional Counsel, C–14J, 77 West Jackson Boulevard, Chicago, Illinois 60604–3590, (312) 886–0562.

A copy of the proposed administrative settlement agreement may be obtained in person or by mail from the EPA's Region 5 Office of Regional Counsel, 77 West Jackson Boulevard, Chicago, Illinois 60604–3590. Additional background information relating to the settlement is available for review at the EPA's Region 5 Office of Regional Counsel.

**Authority:** The Comprehensive Environmental Response, Compensation, and Liability Act, as amended, 42 U.S.C. 9601–9675.

**Douglas Ballotti,**

*Acting Director, Superfund Division, Region 5.*

[FR Doc. E8–21712 Filed 9–16–08; 8:45 am]

**BILLING CODE 6560–50–P**

## FEDERAL COMMUNICATIONS COMMISSION

**[DA 08–2041]**

## Notice of Suspension and Initiation of Debarment Proceedings; Schools and Libraries Universal Service Support Mechanism

**AGENCY:** Federal Communications Commission.

**ACTION:** Notice.

**SUMMARY:** The Enforcement Bureau (the ''Bureau'') gives notice of Mr. Joseph E. Mello's suspension from the schools and libraries universal service support mechanism (or ''E–Rate Program''). Additionally, the Bureau gives notice that debarment proceedings are commencing against him. Mr. Mello, or any person who has an existing contract with or intends to contract with him to provide or receive services in matters arising out of activities associated with or related to the schools and libraries support, may respond by filing an opposition request, supported by documentation to Rebekah Bina, Federal Communications Commission, Enforcement Bureau, Investigations and Hearings Division, Room 4–C330, 445 12th Street, SW., Washington, DC 20554.

**DATES:** Opposition requests must be received by October 17, 2008. However, an opposition request by the party to be suspended must be received 30 days from the receipt of the suspension letter or October 17, 2008, whichever comes first. The Bureau will decide any opposition request for reversal or modification of suspension or debarment within 90 days of its receipt of such requests.

**FOR FURTHER INFORMATION CONTACT:** Rebekah Bina, Federal Communications Commission, Enforcement Bureau, Investigations and Hearings Division, Room 4–C330, 445 12th Street, SW., Washington, DC 20554. Rebekah Bina may be contacted by phone at (202) 418–7931 or e-mail at *Rebekah.Bina@fcc.gov.* If Ms. Bina is unavailable, you may contact Ms. Vickie Robinson, Assistant Chief, Investigations and Hearings Division, by telephone at (202) 418–1420 and by e-mail at *vickie.robinson@fcc.gov.*

**SUPPLEMENTARY INFORMATION:** The Bureau has suspension and debarment authority pursuant to 47 CFR 54.8 and 47 CFR 0.111. Suspension will help to ensure that the party to be suspended cannot continue to benefit from the schools and libraries mechanism pending resolution of the debarment process. Attached is the suspension letter, DA 08–2041, which was mailed to Mr. Mello and released on September 4, 2008. The complete text of the notice of suspension is available for public inspection and copying during regular business hours at the FCC Reference Information Center, Portal II, 445 12th Street, SW., Room CY–A257, Washington, DC 20554. In addition, the complete text is available on the FCC's Web site at *http://www.fcc.gov*. The text may also be purchased from the Commission's duplicating inspection and copying during regular business hours at the contractor, Best Copy and Printing, Inc., Portal II, 445 12th Street, SW., Room CY–B420, Washington, DC 20554, telephone (202) 488–5300 or (800) 378–3160, facsimile (202) 488–5563, or via e-mail *http://www.bcpiweb.com.*

Federal Communications Commission.

**Hillary DeNigro,**

*Chief, Investigations and Hearings Division, Enforcement Bureau.*

The attached is the Suspension and Initiation of Debarment Letter to Mr. Joseph E. Mello.

September 4, 2008

DA 08–2041

VIA CERTIFIED MAIL
RETURN RECEIPT REQUESTED AND E-MAIL

Mr. Joseph E. Mello, c/o Michael O. Sheehan, Esq., Sheehan & Reeve, 139 Orange St., Suite 301, New Haven, CT 06510

Re: Notice of Suspension and Initiation of Debarment Proceedings, File No. EB–08–IH–1615

Dear Mr. Mello: The Federal Communications Commission (''FCC'' or ''Commission'') has received notice of your conviction of mail fraud, in violation of 18 U.S.C. 1341, and subscribing a false tax return, in violation of 26 U.S.C. 7206(1), in connection with your participation in the schools and libraries universal service support mechanism (''E-Rate program'').[1] Consequently, pursuant to 47 CFR 54.8, this letter constitutes official notice of your suspension from the E-Rate program. In addition, the Enforcement Bureau (''Bureau'') hereby notifies you that we are commencing debarment proceedings against you.[2]

## I. Notice of Suspension

The Commission has established procedures to prevent persons who have ''defrauded the government or engaged in similar acts through activities associated with or related to the schools and libraries support mechanism'' from receiving the benefits associated with that program.[3] You pled guilty to mail fraud and income tax fraud in connection with your participation in the E-Rate program involving telecommunications upgrade projects in four Connecticut school districts.[4] While employed as Vice President of Operations for Innovative Network Solutions (''INS''), a first-tier subcontractor of Southwestern Bell Communications (''SBC'') for performing E-Rate funded telecommunications upgrades, you and former SBC employees Richard E. Brown and Keith J. Madeiros participated in a scheme to defraud the E-Rate program.[5] In your position at INS, you agreed to accept invoices submitted by fictitious companies created by Mr. Madeiros and Mr. Brown for work allegedly performed in the Connecticut school districts.[6] INS made payments totaling $608,505 on those fictitious invoices and then passed the costs on to SBC as legitimately reimbursable services under the E-Rate program.[7]

Pursuant to section 54.8(a)(4) of the Commission's rules,[8] your conviction requires the Bureau to suspend you from participating in any activities associated with or related to the schools and libraries fund mechanism, including the receipt of funds or discounted services through the schools and libraries fund mechanism, or consulting with, assisting, or advising applicants or service providers regarding the schools and libraries support mechanism.[9] Your suspension becomes effective upon the earlier of your receipt of this letter or publication of notice in the **Federal Register**.[10]

Suspension is immediate pending the Bureau's final debarment determination. In accordance with the Commission's debarment rules, you may contest this suspension or the scope of this suspension by filing arguments in opposition to the suspension, with any relevant documentation. Your request must be received within 30 days after you receive this letter or after notice is published in the **Federal Register**, whichever comes first.[11] Such requests, however, will not ordinarily be granted.[12] The Bureau may reverse or limit the scope of suspension only upon a finding of extraordinary circumstances.[13] Absent extraordinary circumstances, the Bureau will decide any request for reversal or modification

[1] Any further reference in this letter to ''your conviction'' refers to your guilty plea and subsequent conviction of one count of mail fraud and one count of subscribing a false tax return. *United States* v. *Joseph E. Mello,* Criminal Docket No. 3:07–CR–00224 (RNC–1), Plea Agreement (D. Conn. filed and entered Oct. 9, 2007) (''*Mello Plea Agreement*''); *United States* v. *Joseph E. Mello,* 3:07–CR–00224 (RNC–1), Judgment (D. Conn. filed June 26, 2008 and entered June 30, 2008) (''*Mello Judgment*''). *See also United States* v. *Joseph E. Mello,* Criminal Docket No. 3:07–CR–00224 (RNC–1), Information (D. Conn. filed and entered Oct. 9, 2007) (''*Mello Information*'').

[2] 47 CFR 54.8; 47 CFR 0.111 (delegating to the Enforcement Bureau authority to resolve universal service suspension and debarment proceedings). The Commission adopted debarment rules for the schools and libraries universal service support mechanism in 2003. *See Schools and Libraries Universal Service Support Mechanism,* Second Report and Order and Further Notice of Proposed Rulemaking, 18 FCC Rcd 9202 (2003) (''*Second Report and Order*'') (adopting section 54.521 to suspend and debar parties from the E-rate program). In 2007, the Commission extended the debarment rules to apply to all of the Federal universal service support mechanisms. *Comprehensive Review of the Universal Service Fund Management, Administration, and Oversight; Federal-State Joint Board on Universal Service; Schools and Libraries Universal Service Support Mechanism; Lifeline and Link Up; Changes to the Board of Directors for the National Exchange Carrier Association, Inc.,* Report and Order, 22 FCC Rcd 16372, 16410–12 (2007) (*Program Management Order*) (renumbering section 54.521 of the universal service debarment rules as section 54.8 and amending subsections (a)(1), (5), (c), (d), (e)(2)(i), (3), (e)(4), and (g)).

[3] *Second Report and Order,* 18 FCC Rcd at 9225, para. 66. The Commission's debarment rules define a ''person'' as ''[a]ny individual, group of individuals, corporation, partnership, association, unit of government or legal entity, however, organized.'' 47 CFR 54.8(a)(6).

[4] *See* Mello Information at 2; Mello Plea Agreement at 1–2, 5; Mello Judgment at 1.

[5] Mello Information at 3. The Bureau has debarred Richard E. Brown and Keith Madeiros from the E-Rate Program. *See* Letter from Hillary S. DeNigro, Chief, Investigations and Hearings Division, Enforcement Bureau, to Richard E. Brown, Notice of Debarment, 22 FCC Rcd 20569 (Inv. & Hearings Div., Enf. Bur. 2007); Letter from Hillary S. DeNigro, Chief, Investigations and Hearings Division, Enforcement Bureau, to Keith J. Madeiros, Notice of Debarment, 23 FCC Rcd 7959 (Inv. & Hearings Div., Enf. Bur. 2008).

[6] Mello Information at 2–4. *See also* Department of Justice, Press Release (Oct. 9, 2007) (available at *http://www.usdoj.gov/usao/ct/Press2007/20071009.html*) (last accessed Feb. 5, 2008) (''DOJ October 9 Press Release'').

[7] Mello Information at 4.

[8] 47 CFR 54.8(a)(4). *See Second Report and Order,* 18 FCC Rcd at 9225–27, paras. 67–74.

[9] *Second Report and Order,* 18 FCC Rcd at 9225, para. 67; 47 U.S.C. 254; 47 CFR 54.502–54.503; 47 CFR 54.521(a)(4).

[10] *Second Report and Order,* 18 FCC Rcd at 9226, para. 69; 47 CFR 54.8(e)(1).

[11] 47 CFR 54.8(e)(4).

[12] *Id.*

[13] 47 CFR 54.8(e)(5).

of suspension within 90 days of its receipt of such request.[14]

**II. Initiation of Debarment Proceedings**

Your guilty plea to criminal conduct in connection with the E-Rate program, in addition to serving as a basis for immediate suspension from the program, also serves as a basis for the initiation of debarment proceedings against you. Your conviction falls within the categories of causes for debarment defined in section 54.8(c) of the Commission's rules.[15] Therefore, pursuant to section 54.8(a)(4) of the Commission's rules, your conviction requires the Bureau to commence debarment proceedings against you.

As with your suspension, you may contest debarment or the scope of the proposed debarment by filing arguments and any relevant documentation within 30 calendar days of the earlier of the receipt of this letter or of publication in the **Federal Register**.[16] Absent extraordinary circumstances, the Bureau will debar you.[17] Within 90 days of receipt of any opposition to your suspension and proposed debarment, the Bureau, in the absence of extraordinary circumstances, will provide you with notice of its decision to debar.[18] If the Bureau decides to debar you, its decision will become effective upon the earlier of your receipt of a debarment notice or publication of the decision in the **Federal Register**.[19]

If and when your debarment becomes effective, you will be prohibited from participating in activities associated with or related to the schools and libraries support mechanism for three years from the date of debarment.[20] The Bureau may, if necessary to protect the public interest, extend the debarment period.[21]

Please direct any response, if by messenger or hand delivery, to Marlene H. Dortch, Secretary, Federal Communications Commission, 236 Massachusetts Avenue, NE., Suite 110, Washington, DC 20002, to the attention of Rebekah Bina, Attorney Advisor, Investigations and Hearings Division, Enforcement Bureau, Room 4–C330, with a copy to Vickie Robinson, Assistant Chief, Investigations and Hearings Division, Enforcement Bureau, Room 4–C330, Federal Communications Commission. If sent by commercial overnight mail (other than U.S. Postal Service Express Mail and Priority Mail), the response should be sent to the Federal Communications Commission, 9300 East Hampton Drive, Capitol Heights, Maryland 20743. If sent by first-class, Express, or Priority mail, the response should be sent to Rebekah Bina, Attorney Advisor, Investigations and Hearings Division, Enforcement Bureau, Federal Communications Commission, 445 12th Street, SW., Room 4–C330, Washington, DC 20554, with a copy to Vickie Robinson, Assistant Chief, Investigations and Hearings Division, Enforcement Bureau, Federal Communications Commission, 445 12th Street, SW., Room 4–C330, Washington, DC 20554. You shall also transmit a copy of the response via e-mail to *rebekah.bina@fcc.gov* and to *vickie.robinson@fcc.gov.*

If you have any questions, please contact Ms. Bina via mail, by telephone at (202) 418–7931 or by e-mail at *rebekah.bina@fcc.gov.* If Ms. Bina is unavailable, you may contact Ms. Vickie Robinson, Assistant Chief, Investigations and Hearings Division, by telephone at (202) 418–1420 and by e-mail at *vickie.robinson@fcc.gov.*

Hillary S. DeNigro
*Chief Investigations and Hearings Division Enforcement Bureau*

cc: Calvin B. Kurimai, Esq., Assistant United States Attorney; Kristy Carroll, Esq., Universal Service Administrative Company (via e-mail).

[FR Doc. E8–21723 Filed 9–16–08; 8:45 am]

BILLING CODE 6712–01–P

[14] *See Second Report and Order,* 18 FCC Rcd at 9226, para. 70; 47 CFR 54.8(e)(5), 54.8(f).

[15] ''Causes for suspension and debarment are the conviction of or civil judgment for attempt or commission of criminal fraud, theft, embezzlement, forgery, bribery, falsification or destruction of records, making false statements, receiving stolen property, making false claims, obstruction of justice and other fraud or criminal offense arising out of activities associated with or related to the schools and libraries support mechanism.'' 47 CFR 54.8(c). Such activities ''include the receipt of funds or discounted services through [the Federal universal service] support mechanisms, or consulting with, assisting, or advising applicants or service providers regarding [the Federal universal service] support mechanism.'' 47 CFR 54.8(a)(1).

[16] *See Second Report and Order,* 18 FCC Rcd at 9226, para. 70; 47 CFR 54.8(e)(3).

[17] *Second Report and Order,* 18 FCC Rcd at 9227, para. 74.

[18] *See id.,* 18 FCC Rcd at 9226, para. 70; 47 CFR 54.8(e)(5).

[19] *Id.* The Commission may reverse a debarment, or may limit the scope or period of debarment upon a finding of extraordinary circumstances, following the filing of a petition by you or an interested party or upon motion by the Commission. 47 CFR 54.8(f).

[20] *Second Report and Order,* 18 FCC Rcd at 9225, para. 67; 47 CFR 54.8(d), 54.8(g).

[21] *Id.*

## FEDERAL MARITIME COMMISSION

### Notice of Agreements Filed

The Commission hereby gives notice of the filing of the following agreements under the Shipping Act of 1984. Interested parties may submit comments on agreements to the Secretary, Federal Maritime Commission, Washington, DC 20573, within ten days of the date this notice appears in the **Federal Register**. Copies of agreements are available through the Commission's Web site (www.fmc.gov) or contacting the Office of Agreements at (202) 523–5793 or *tradeanalysis@fmc.gov.*

*Agreement No.:* 201194.

*Title:* Marine Terminal Services Agreement between Port of Houston Authority and CMA CGM.

*Parties:* Port of Houston Authority and CMA CGM S.A.

*Filing Party:* Erik A. Eriksson, Esq.; General Counsel; Port of Houston Authority; PO Box 2562; Houston, TX 77252–2562.

*Synopsis:* The agreement authorizes Port of Houston Authority to establish discounted rates and preferential berthing rights for CMA CGM vessels calling at the port.

*Agreement No.:* 201195.

*Title:* Marine Terminal Services Agreement between Port of Houston Authority and CIA. SudAmericana de Vapores S.A.

*Parties:* Port of Houston Authority and CIA. SudAmericana de Vapores S.A.

*Filing Party:* Erik A. Eriksson, Esq.; General Counsel; Port of Houston Authority; PO Box 2562; Houston, TX 77252–2562.

*Synopsis:* The agreement authorizes Port of Houston Authority to establish discounted rates and preferential berthing rights for CIA. SudAmericana de Vapores S.A. vessels calling at the port.

By Order of the Federal Maritime Commission.

Dated: September 12, 2008.

**Karen V. Gregory,**

*Assistant Secretary.*

[FR Doc. E8–21757 Filed 9–16–08; 8:45 am]

BILLING CODE 6730–01–P

## FEDERAL MARITIME COMMISSION

### Ocean Transportation Intermediary License Applicants

Notice is hereby given that the following applicants have filed with the Federal Maritime Commission an application for license as a Non-Vessel Operating Common Carrier and Ocean Freight Forwarder—Ocean Transportation Intermediary pursuant to section 19 of the Shipping Act of 1984 as amended (46 U.S.C. Chapter 409 and 46 CFR 515).

Persons knowing of any reason why the following applicants should not receive a license are requested to

contact the Office of Transportation Intermediaries, Federal Maritime Commission, Washington, DC 20573.

**Non-Vessel Operating Common Carrier Ocean Transportation Intermediary Applicants**

A.D.S. Air & Ocean Freight, LLC, 11155 NW 33 Street, Doral, FL 33172. *Officers:* Karen A. Diaz, General Manager, (Qualifying Individual).

Global Partner Alliance, Inc., 703 Foster Ave., Frnt A, Bensenville, IL 60106. *Officers:* Jakub Ligeza, President, (Qualifying Individual). Michal Gaglewski, President.

Cairo Forwarding, Inc., 807 Briarwood Drive, Haverhill, FL 33415. *Officers:* Ernesto Fernandez, Director, (Qualifying Individual). Miroslava Fernandez, President.

Four Points Ocean Inc., 505 Thornall Street, Ste. 420, Edison, NJ 08837. *Officers:* Joseph P. Felitto, President, (Qualifying Individual), Raymond Boudart, Vice President.

OTS USA, Inc. 150–32 132nd Avenue, Jamaica, NY 11434. *Officer:* Guido Zehnder, Vice President, (Qualifying Individual).

J & D America Inc., 248 W. 35th Street, 14th Floor, New York, NY 10001. *Officers:* Yeong S. Shim, President, (Qualifying Individual). Byung S. Kim, Vice President.

Premier Van Lines Inc., 3953 South 200 East, Salt Lake City, UT 84107. *Officer:* James A. Haddow, President, (Qualifying Individual).

**Non-Vessel Operating Common Carrier and Ocean Freight Forwarder Transportation Intermediary Applicants**

Bekins Independence Forwarders, Inc., 330 So. Mannheim Road, Hillside, IL 60162. *Officer:* Michael Petersen, President.

Skyline Customs Services, LLC, 1555 N. Treasure Drive, #211, No. Bay Village, FL 33141. *Officers:* Cintia Altheman, General Manager, (Qualifying Individual). Rodrigo A. Pacheco, Partner.

Posey International Inc., 7218 Clinton Drive, Houston, TX 77020. *Officer:* Jesse Villarreal, President, (Qualifying Individual).

Nautica Cargo Services Inc. dba Navinsa Line, 7911 N.W. 72 Ave., #219–B, Miami, FL 33166. *Officer:* Vivian Gonzalez, President, (Qualifying Individual).

Nuco Logistics, Inc., One World Trade Center, Ste. 1890, Long Beach, CA 90831. *Officer:* Wendy Gabbard, Corp. Officer/Secretary. (Qualifying Individual).

Trade Logistics Corp., 12999 SW 135th Street, Miami, FL 33186. *Officer:* Brenda L. Perez, Director, (Qualifying Individual).

Dama Cargo Logistics, Corp., 2759 NW 82 Avenue, Doral, FL 33122. *Officer:* Moraima, Baez, General Manager, (Qualifying Individual).

Woojin Global Logistics USA, Inc., 2396 E. Pacifica Place, Rancho Domingues, CA 90220. *Officers:* Han S. Yoo, President, (Qualifying Individual). Baik Yong, Vice President.

Keith Phillips Transportation, LLC, 124 Garden Gate Dr., Ponte Vedra Beach, FL 32082. *Officers:* Keith Phillips, Member, (Qualifying Individual). Ann V. Phillips, Member.

**Ocean Freight Forwarder—Ocean Transportation Intermediary Applicants**

Flegenheimer International, Inc., 227 W. Grand Avenue, El Segundo, CA 90245. *Officer:* William A. Flegenheimer, President. (Qualifying Individual).

Gold Shipping Corp., 114 Pemberton Ave., Staten Island, NY 10308. *Officers:* Rumiya Kalieva, President, (Qualifying Individual). Vadim Simakov, Secretary.

Tradewinds Logistics Inc., 2221 Edge Lake Drive, Ste. 185, Charlotte, NC 28217. *Officers:* Stephen A. Biddix, President, (Qualifying Individual). Darrelle L. Biddix, Secretary.

Clark-Mantle, Inc. dba Worldwide Cargo Specialties, 3337 West Parkway Blvd., Salt Lake City, UT 84119. *Officer:* Dana Ferguson, General Manager, (Qualifying Individual).

Dated: September 12, 2008.

**Karen V. Gregory,**

*Assistant Secretary.*

[FR Doc. E8–21778 Filed 9–16–08; 8:45 am]

BILLING CODE 6730–01–P

## FEDERAL MARITIME COMMISSION

### Ocean Transportation Intermediary License; Rescission of Order of Revocation

Notice is hereby given that the Order revoking the following license is being rescinded by the Federal Maritime Commission pursuant to section 19 of the Shipping Act of 1984 (46 U.S.C. Chapter 409) and the regulations of the Commission pertaining to the licensing of Ocean Transportation Intermediaries, 46 CFR Part 515.

*License Number:* 020747N.

*Name:* Prime Logistics Int'l, Inc.

*Address:* 6900 N.W. 84th Avenue, Miami, FL 33166.

*Order Published:* FR: 08/20/08 (Volume 73, No. 162, Pg. 49204).

**Sandra L. Kusumoto,**

*Director, Bureau of Certification and Licensing.*

[FR Doc. E8–21768 Filed 9–16–08; 8:45 am]

BILLING CODE 6730–01–P

## FEDERAL MARITIME COMMISSION

### Ocean Transportation Intermediary License Revocations

The Federal Maritime Commission hereby gives notice that the following Ocean Transportation Intermediary licenses have been revoked pursuant to section 19 of the Shipping Act of 1984 (46 U.S.C. Chapter 409) and the regulations of the Commission pertaining to the licensing of Ocean Transportation Intermediaries, 46 CFR Part 515, effective on the corresponding date shown below:

*License Number:* 019143NF.
*Name:* Ambrit-USA Inc.
*Address:* 2710 NW 30th Ave., Lauderdale Lakes, FL 33311.
*Date Revoked:* August 2, 2008.
*Reason:* Failed to maintain valid bonds.

*License Number:* 018511NF.
*Name:* Asco USA, L.L.C. dba Asco Freight Management and Venture Transport Line.
*Address:* 314 North Post Oak Lane, Houston, TX 77024.
*Date Revoked:* March 27, 2008.
*Reason:* Surrendered license voluntarily.

*License Number:* 020659N.
*Name:* Conceptum TBS Projects LLC.
*Address:* 612 East Grassy Sprain Rd., Yonkers, NY 10710–2312.
*Date Revoked:* August 13, 2008.
*Reason:* Surrendered license voluntarily.

*License Number:* 018482N.
*Name:* Dolphin Shipping, Inc.
*Address:* 1750 E. Ocean Blvd., Unit #1606, Long Beach, CA 90802.
*Date Revoked:* August 7, 2008.
*Reason:* Failed to maintain a valid bond.

*License Number:* 019054F.
*Name:* Dublin Worldwide Moving & Storage.
*Address:* 2831 Merced Street, San Leandro, CA 94577.
*Date Revoked:* August 6, 2008.
*Reason:* Failed to maintain a valid bond.

*License Number:* 007823N.
*Name:* (Europe/U.K.) Genesis Co. dba Genesis (EUROPE/U.K.) Ltd.
*Address:* 218 E. Main Street, Humble, TX 77338.

*Date Revoked:* August 7, 2008.
*Reason:* Failed to maintain a valid bond.

*License Number:* 017855N.
*Name:* 1st Class International, Inc. dba 1st Class Moving & Storage.
*Address:* 7272–D Park Circle Drive, Hanover, MD 21076.
*Date Revoked:* August 9, 2008.
*Reason:* Failed to maintain a valid bond.

*License Number:* 019641N.
*Name:* Fame Cargo International, Inc.
*Address:* 5879–B New Peachtree Rd., Doraville, GA 30340.
*Date Revoked:* August 7, 2008.
*Reason:* Failed to maintain a valid bond.

*License Number:* 003732F.
*Name:* Foremost International Cargo Services, Inc.
*Address:* 18811 Crenshaw Place, Torrance, CA 90504.
*Date Revoked:* August 29, 2008.
*Reason:* Failed to maintain a valid bond.

*License Number:* 020657NF.
*Name:* GTI International Logistics, LLC dba GTI Container Line.
*Address:* 74 Washington Street, Topsfield, MA 01983.
*Date Revoked:* August 5, 2008.
*Reason:* Surrendered license voluntarily.

*License Number:* 017915N.
*Name:* Greating Marine Inc. dba Advanced Cargo Management Inc.
*Address:* 2225 West Commonwealth Ave., Ste. 316, Alhambra, CA 91803.
*Date Revoked:* August 20, 2008.
*Reason:* Failed to maintain a valid bond.

*License Number:* 020158N.
*Name:* Hong Logistics, Inc.
*Address:* 852 Fairview Avenue, #6, Arcadia, CA 91007.
*Date Revoked:* August 30, 2008.
*Reason:* Failed to maintain a valid bond.

*License Number:* 017478N.
*Name:* JBA Transport & Logistics, Inc.
*Address:* 9140 Marina St., Ste. 201, Cond. Poinciana, Ponce, Puerto Rico 00717.
*Date Revoked:* August 14, 2008.
*Reason:* Failed to maintain a valid bond.

*License Number:* 019389N.
*Name:* M & H Shipping Corporation.
*Address:* 510 Coralridge Plaza, Ste. 103, City of Industry, CA 91756.
*Date Revoked:* July 24, 2008.
*Reason:* Failed to maintain a valid bond.

*License Number:* 018305F.
*Name:* McLogix, Inc.
*Address:* 18030 S. Figueroa Street, Gardena, CA 90248.
*Date Revoked:* August 12, 2008.
*Reason:* Surrendered license voluntarily.

*License Number:* 019788N.
*Name:* Miriam Family Cargo, Inc.
*Address:* 18 NW 12th Avenue, Miami, FL 33128.
*Date Revoked:* August 30, 2008.
*Reason:* Failed to maintain a valid bond.

*License Number:* 001772F.
*Name:* Norvanco International, Inc.
*Address:* 3514 142nd Avenue E., Sumner, WA 98390.
*Date Revoked:* August 11, 2008.
*Reason:* Failed to maintain a valid bond.

*License Number:* 020303F.
*Name:* Panda Logistics USA, Inc.
*Address:* 19600 S. Alameda Street, Ste. 1, E. Rancho Dominguez, CA 90221.
*Date Revoked:* August 15, 2008.
*Reason:* Failed to maintain a valid bond.

*License Number:* 015847F.
*Name:* Straightline Logistics, Inc.
*Address:* One Cross Island Plaza, Ste. 203–G, Rosedale, NY 11422.
*Date Revoked:* August 14, 2008.
*Reason:* Failed to maintain a valid bond.

*License Number:* 020261F.
*Name:* TSC Logistics, LLC.
*Address:* 2500–B Broening Highway, Ste. 100, Baltimore, MD 21224.
*Date Revoked:* August 23, 2008.
*Reason:* Failed to maintain a valid bond.

*License Number:* 021036N.
*Name:* Tiffany-Michele Nakano dba Accord Relocations.
*Address:* 67 Lockheed Avenue, Las Vegas, NV 89183.
*Date Revoked:* July 23, 2008.
*Reason:* Surrendered license voluntarily.

*License Number:* 020207F.
*Name:* United Logistics Services, Inc.
*Address:* 1911 NW 150th Street, Pembroke Pines, FL 33028.
*Date Revoked:* August 25, 2008.
*Reason:* Surrendered license voluntarily.

*License Number:* 003615F.
*Name:* Unitrans Consolidated Inc.
*Address:* 180–02 Eastgate Plaza, Jamaica, NY 11434.
*Date Revoked:* August 10, 2008.
*Reason:* Failed to maintain a valid bond.

*License Number:* 020793N.
*Name:* Universal Cargo Express, Inc.
*Address:* 1782 NW 38th Avenue, Lauderdale Lakes, FL 33311.
*Date Revoked:* August 31, 2008.
*Reason:* Failed to maintain a valid bond.

*License Number:* 019340N.
*Name:* UTS Fast Lane Express Inc. dba UFLEX.
*Address:* 574 Lyons Avenue, Irvington, NJ 07111.
*Date Revoked:* August 29, 2008.
*Reason:* Failed to maintain a valid bond.

*License Number:* 018030N.
*Name:* Zohar Worldwide LLC.
*Address:* 1069 Sneath Lane, San Bruno, CA 94066.
*Date Revoked:* August 6, 2008.
*Reason:* Failed to maintain a valid bond.

**Sandra L. Kusumoto,**
*Director, Bureau of Certification and Licensing.*

[FR Doc. E8–21767 Filed 9–16–08; 8:45 am]
BILLING CODE 6730–01–P

## FEDERAL RESERVE SYSTEM

### Agency Information Collection Activities: Announcement of Board Approval Under Delegated Authority and Submission to OMB

**SUMMARY:**

**Background**

Notice is hereby given of the final approval of proposed information collections by the Board of Governors of the Federal Reserve System (Board) under OMB delegated authority, as per 5 CFR 1320.16 (OMB Regulations on Controlling Paperwork Burdens on the Public). Board-approved collections of information are incorporated into the official OMB inventory of currently approved collections of information. Copies of the Paperwork Reduction Act Submission, supporting statements and approved collection of information instrument(s) are placed into OMB's public docket files. The Federal Reserve may not conduct or sponsor, and the respondent is not required to respond to, an information collection that has been extended, revised, or implemented on or after October 1, 1995, unless it displays a currently valid OMB control number.

**FOR FURTHER INFORMATION CONTACT:**
Federal Reserve Board Clearance Officer—Michelle Shore—Division of Research and Statistics, Board of Governors of the Federal Reserve System, Washington, DC 20551 (202–452–3829).

OMB Desk Officer—Kimberly P. Nelson—Office of Information and Regulatory Affairs, Office of Management and Budget, New Executive Office Building, Room 10235, Washington, DC 20503.

*Final approval under OMB delegated authority of the extension for three years, with revision, of the following reports:*

1. *Report title:* International Applications and Prior Notifications Under Subpart B of Regulation K.

*Agency form number:* FR K–2.

*OMB control number:* 7100–0284.

*Frequency:* On occasion.

*Reporters:* Foreign banks.

*Annual reporting hours:* 630 hours.

*Estimated average hours per response:* 35 hours.

*Number of respondents:* 18.

*General description of report:* This information collection is mandatory (12 U.S.C. 3105, 3107, and 3108). The applying or notifying organization has the opportunity to request confidentiality for information that it believes will qualify for a Freedom of Information Act exemption.

*Abstract:* Foreign banks are required to obtain the prior approval of the Federal Reserve to establish a branch, agency, or representative office; to acquire ownership or control of a commercial lending company in the United States; or to change the status of any existing office in the United States. The Federal Reserve uses the information, in part, to fulfill its statutory obligation to supervise foreign banking organizations with offices in the United States.

*Current actions:* On July 1, 2008, the Federal Reserve published a notice in the **Federal Register** (73 FR 37455) requesting public comment for 60 days on the extension, with revision, of the applications and notifications. The comment period for this notice expired on September 2, 2008. The Federal Reserve did not receive any comments. The revisions will be implemented as proposed.

2. *Report title:* Application for a Foreign Organization to Acquire a Bank Holding Company.

*Agency form number:* FR Y–3F.

*OMB control number:* 7100–0119.

*Frequency:* On occasion

*Reporters:* Any company organized under the laws of a foreign country seeking to acquire a U.S. subsidiary bank or bank holding company

*Annual reporting hours:* 580 hours

*Estimated average hours per response:* Initial application, 90 hours; subsequent application, 70 hours.

*Number of respondents:* Initial application, 1; subsequent application, 7.

*General description of report:* This information collection is required to obtain or retain a benefit under sections 3(a), 3(c), and 5(a) through 5(c) of the Bank Holding Company Act (12 U.S.C. 1842(a) and (c) and 1844(a) through (c)). The information provided in the application is not confidential unless the applicant specifically requests confidentiality and the Federal Reserve approves the request.

*Abstract:* Under the Bank Holding Company Act submission of this application is required for any company organized under the laws of a foreign country seeking to acquire a U.S. subsidiary bank or bank holding company. Applicants must provide financial and managerial information, discuss the competitive effects of the proposed transaction, and discuss how the proposed transaction would enhance the convenience and needs of the community to be served. The Federal Reserve uses the information, in part, to fulfill its supervisory responsibilities with respect to foreign banking organizations in the United States.

*Current actions:* On July 1, 2008, the Federal Reserve published a notice in the **Federal Register** (73 FR 37455) requesting public comment for 60 days on the extension, with revision, of the application. The comment period for this notice expired on September 2, 2008. The Federal Reserve did not receive any comments. The revisions will be implemented as proposed.

3. *Report title:* Domestic Finance Company Report of Consolidated Assets and Liabilities.

*Agency form number:* FR 2248.

*OMB control number:* 7100–0005.

*Frequency:* Monthly, quarterly, and semi-annually.

*Reporters:* Domestic finance companies and mortgage companies.

*Annual reporting hours:* 317 hours.

*Estimated average hours per response:* Monthly, 18 minutes; quarterly, 27 minutes; semi-annually, 10 minutes.

*Number of respondents:* 70.

*General description of report:* This information collection is voluntary (12 U.S.C. 225(a)). Individual respondent data are confidential under section (b)(4) of the Freedom of Information Act (5 U.S.C. 552).

*Abstract:* The monthly FR 2248 collects balance sheet data on major categories of consumer and business credit receivables, major short-term liabilities, and securitized assets. For quarter-end months (March, June, September, and December), additional asset and liability items are collected to provide a full balance sheet. If the need arises, a special addendum may be used, no more than semi-annually, for timely information on questions of immediate concern to the Federal Reserve.

*Current actions:* On July 1, 2008, the Federal Reserve published a notice in the **Federal Register** (73 FR 37455) requesting public comment for 60 days on the extension, with revision, of this information collection. The comment period for this notice expired on September 2, 2008. The Federal Reserve did not receive any comments. The revisions will be implemented as proposed.

Board of Governors of the Federal Reserve System, September 11, 2008.

**Robert deV. Frierson,**

*Deputy Secretary of the Board.*

[FR Doc. E8–21636 Filed 9–16–08; 8:45 am]

BILLING CODE 6210–01–P

## FEDERAL TRADE COMMISSION

### Granting of Request for Early Termination of the Waiting Period Under the Premerger Notification Rules

Section 7A of the Clayton Act, 15 U.S.C. 18a, as added by Title II of the Hart-Scott-Rodino Antitrust Improvements Act of 1976, requires persons contemplating certain mergers or acquisitions to give the Federal Trade Commission and the Assistant Attorney General advance notice and to wait designated periods before consummation of such plans. Section 7A(b)(2) of the Act permits the agencies, in individual cases, to terminate this waiting period prior to its expiration and requires that notice of this action be published in the **Federal Register**.

The following transactions were granted early termination of the waiting period provided by law and the premerger notification rules. The grants were made by the Federal Trade Comission and the Assistant Attorney General for the Antitrust Division of the Department of Justice. Neither agency intends to take any action with respect to these proposed acquisitions during the applicable waiting period.

| Trans No. | Acquiring | Acquired | Entities |
|---|---|---|---|
| **Transactions Granted Early Termination—08/05** | | | |
| 20081512 | TCV V, L.P | RiskMetrics Group, Inc. | RiskMetrics Group, Inc. |
| **Transactions Granted Early Termination—08/06/2008** | | | |
| 20081498 | Entegris, Inc | Cowen Investments Holding, LLC | Poco Graphite Holdings, LLC Poco Graphite, Inc.; Poco Graphite International; Poco Graphite, SARL. |
| 20081524 | Inergy, L.P | Demetree Salt Holdings, LLC | U.S. Salt, LLC. |
| **Transactions Granted Early Termination—08/06/2008** | | | |
| 20081536 | Ashland Inc | Hercules Incorporated | Hercules Incorporated. |
| 20081557 | AEA Investors 2006 Fund VI, L.P | Quad-C Partners L.P | Behavioral Holding Corp. |
| 20081559 | Cross Country Healthcare, Inc | MDA Holdings, Inc | Allied Health Group, Inc.; Credent Verification and Licensing Services, Inc.; Jamestown Indemnity, Ltd.; Medical Doctor Associates, Inc. |
| 20081560 | Microsoft Corporation | DATAllegro, Inc | DATAllegro, Inc. |
| 20081564 | Blackstone RGIS Capital Partners V L.P | Ronald 0. Perelman | Allied Security Holdings LLC. |
| 20081570 | Convergys Corporation | Intervoice, Inc | Intervoice, Inc. |
| 20081579 | CVT Holding S.A.S | Financiere Cover team SAS | Financiere Coverteam SAS. |
| **Transactions Granted Early Termination—08/10/2008** | | | |
| 19882164 | Anacomp, Inc | Xidex Corporation | Xidex Corporation. |
| **Transactions Granted Early Termination—08/12/2008** | | | |
| 20081398 | Smith International, Inc | W–H Energy Services, Inc | W–H Energy Services, Inc. |
| 20081525 | American Seafoods L.P | Yardarm Knot, Inc | Highland Light Seafoods, LLC; Tracy Anne, Inc. |
| **Transactions Granted Early Termination—08/13/2008** | | | |
| 20071584 | Sun Pharmaceutical Industries Ltd | Taro Pharmaceutical Industries Ltd | Taro Pharmaceutical Industries Ltd. |
| 20081529 | David and Sherry Gold | 99 cents Only Stores | 99 cents Only Stores. |
| 20081563 | Nam Jung Kim | Del Monte Foods Company | Del Monte Foods Company; Galapesca, S.A.; Marine Trading Pacific, Inc.; Panapesca Fishing, Inc.; Star-Kist Samoa, Inc. |
| 20081568 | Motorola, Inc | Jay Chaudhry | AirDefense, Inc. |
| 20081577 | DeVry Inc | U.S. Education Corporation | U.S. Education Corporation. |
| **Transactions Granted Early Termination—08/14/2008** | | | |
| 20081585 | Tilman J | Fertitta Landry's Restaurants, Inc | Landry's Restaurants, Inc. |
| **Transactions Granted Early Termination—08/15/2008** | | | |
| 20081532 | Nycomed S.C.A. SICAR | Immunomedics, Inc | Immunomedics, Inc. |
| 20081571 | David Gelbaum and Monica Chavez Gelbaum. | GridPoint, Inc | GridPoint, Inc. |
| 20081593 | International Business Machines Corporation. | ILOG S.A | ILOG S.A. |
| 20081595 | Bay Harbour Holdings, LLC | S&B Industries Inc. (debtor-in-possession. | S&B Industries Inc. (debtor-in-possession). |
| 20081598 | Michel Reybier | Chateau Montelena (FNA Montelena Associates). | Chateau Montelena (FNA Montelena Associates). |
| 20081600 | Macquarie Global Partnership V Opportunities Partners, L.P. | Marathon Fund Limited | Petermann Holding Co. |
| 20081601 | TowerCo II Holdings LLC | Sprint Nextel Corporation | Sprint Nextel Corporation. |
| 20081609 | 4116372 Canada Inc | American Greetings Corporation | American Greetings Corporation. |
| 20081612 | Alcatel Lucent | Motive, Inc | Motive, Inc. |
| 20081614 | CHS Private Equity V LP | Web Service Company, Inc | Web Service Company, LLC. |
| **Transactions Granted Early Termination—08/18/2008** | | | |
| 20081599 | Iberdrola, S.A | Energy East Corporation | Energy East Corporation. |

| Trans No. | Acquiring | Acquired | Entities |
|---|---|---|---|
| 20081606 | Quadrangle (AIV) Capital Partners II LP | Stephen E. Myers | Smart City Information Services, LLC OFL LLC); Smart City/mpiNET, LLC (FL LLC); Smart City Solutions, LLC (FL LLC); Smart City Telecommunications LLC (Del. LLC); Smart City Television LLC (Del. LLC). |
| **Transactions Granted Early Termination—08/19/2008** | | | |
| 20081608 | Time Warner Inc | Ripplewood Partners II, LP | QSP, Inc. |
| **Transactions Granted Early Termination—08/20/2008** | | | |
| 20081517 | MetLife Inc | First Horizon National Corporation | First Horizon National Corporation. |
| 20081527 | ABB Ltd | KEC Acquisition Corporation | KEC Acquisition Corporation. |
| 20081607 | Kenneth J, Feld | Live Nation, Inc | Live Nation Motor Sports, Inc. |
| **Transactions Granted Early Termination—08/21/2008** | | | |
| 20081544 | Commercial Metals Company Reinforcing-Tensioning Services, Inc. | Alfredo Bubion | Bubion Investment Co. Regional Steel Corporation; RPS Cable Corporation; The Dawn Lizabeth Bubion 2003 Trust; The Debbie Ann Martinez 2003 Trust. |
| 20081594 | Charlesbank Equity Fund VI, Limited Partnership. | Cardinal Health, Inc. | Tecomet Inc. (''Tecomet''). |
| **Transactions Granted Early Termination—08/22/2008** | | | |
| 20081554 | Cleveland Cliffs Inc | Alpha Natural Resources, Inc | Alpha Natural Resources, Inc. |
| 20081574 | Ametek, Inc | Xantrex Technology Inc | Elgar Holdings, Inc. |
| 20081586 | Schneider Electric SA | Xantrex Technology, Inc | Xantrex Technology Inc. |
| **Transactions Granted Early Termination—08/25/2008** | | | |
| 20081589 | Pershing Square, L.P | Longs Drug Stores Corporation | Longs Drug Stores Corporation. |
| 20081620 | Markit Group Holdings Limited | JPMorgan Chase & Co | J.P. Morgan FCS Corp. |
| 20081623 | Temasek Capital (Private) Limited | Merrill Lynch & Co., Inc | Merrill Lynch & Co., Inc. |
| 20081629 | Covance Inc | Eli Lilly and Company | Eli Lilly and Company. |
| 20081633 | LLR Equity Partners III, L.P | SunTrust Banks, Inc | TransPlatinum Service Corp. |
| 20081634 | The Walt Disney Company | The Active Network, Inc | The Active Network, Inc. |
| 20081642 | Gannett Co., Inc | CareerBuilder, LLC | CareerBuilder, LLC. |
| 20081645 | Deutsche Telekom AG | NextWave Wireless, Inc | AWS Wireless Inc. |
| 20081651 | Diamond Foods, Inc | General Mills, Inc | General Mills, Inc. |
| **Transactions Granted Early Termination—08/26/2008** | | | |
| 20081562 | JV Holdings | Spitzer Holding Company | Spitzer Industries LLC. |
| 20081617 | Georg F.W | Continental AG Schaeffler | Continental AG. |
| 20081625 | Arlington Tankers Ltd | General Maritime Corporation | General Maritime Corporation. |
| 20081626 | General Maritime Corporation | Arlington Tankers Ltd | Arlington Tankers Ltd. |
| 20081631 | Peter C. Georgiopoulos | Galileo Holding Corporation | Galileo Holding Corporation. |
| 20081638 | PTT Chemical Public Company Limited | Cognis Holding Luxembourg S.a.r.l | Cognis Olechemicals (M) Sdn. Bhd. |
| 20081639 | PTT Chemical Public Company Limited | Permodalan Nasional Berhad | Cognis Olechemicals (M) Sdn. Bhd. |
| **Transactions Granted Early Termination—08/27/2008** | | | |
| 20081436 | Finmeccanica-Societa' per azioni | DRS Technologies, Inc | DRS Technologies, Inc. |
| **Transactions Granted Early Termination—08/28/2008** | | | |
| 20081622 | Ameriprise Financial, Inc | William C. Morris | J.& W. Seligman & Co. Incorporated. |
| 20081628 | Macquarie Global Opportunities Partners, L.P. | Sentient Jet Holdings, LLC | AvBuy, LLC; PNFS, LLC; Private Jets, Inc.; Sentient Flight Group, Inc.; Sentient Jet, Inc. |
| **Transactions Granted Early Termination—08/29/2008** | | | |
| 20081489 | Else Kroner-Fresenius-Stiftung | Dr. Patrick Soon-Shiong, M.D | APP Pharmaceuticals, Inc. |
| 20081597 | Johnson & Johnson | Amgen Inc | Amgen Inc. |
| 20081653 | Assurant, Inc | Trident II, L.P | Trident Signal Holdings, Inc. |

*For Further Information Contact:* Sandra M. Peay, Contact Representative, or Renee Hallman, Contact Representative, Federal Trade Commission, Premerger Notification Office, Bureau Of Competition, Room H–303, Washington, DC 20580, (202) 326–3100.

By Direction of the Commission.

**Donald S. Clark,**

*Secretary.*

[FR Doc. E8–21466 Filed 9–16–08; 8:45 am]

**BILLING CODE 6750–01–M**

## DEPARTMENT OF HEALTH AND HUMAN SERVICES

### Centers for Disease Control and Prevention

**[60-Day–08–08BP]**

### Proposed Data Collections Submitted for Public Comment and Recommendations

In compliance with the requirement of Section 3506(c)(2)(A) of the Paperwork Reduction Act of 1995 for opportunity for public comment on proposed data collection projects, the Centers for Disease Control and Prevention (CDC) will publish periodic summaries of proposed projects. To request more information on the proposed projects or to obtain a copy of the data collection plans and instruments, call 404–639–5960 and send comments to Maryam Daneshvar, CDC Acting Reports Clearance Officer, 1600 Clifton Road, MS–D74, Atlanta, GA 30333 or send an e-mail to *omb@cdc.gov*.

Comments are invited on: (a) Whether the proposed collection of information is necessary for the proper performance of the functions of the agency, including whether the information shall have practical utility; (b) the accuracy of the agency's estimate of the burden of the proposed collection of information; (c) ways to enhance the quality, utility, and clarity of the information to be collected; and (d) ways to minimize the burden of the collection of information on respondents, including through the use of automated collection techniques or other forms of information technology. Written comments should be received within 60 days of this notice.

**Proposed Project**

Audience Profiling for Carbon Monoxide Poisoning Prevention Status—New—National Center for Environmental Health (NCEH), Coordinating Center for Environmental Health and Injury Prevention (CCEHIP), Centers for Disease Control and Prevention (CDC).

*Background and Brief Description*

Carbon monoxide (CO) is one of the leading causes of poison-related deaths in the United States. The Centers for Disease Control and Prevention (CDC) estimates that each year approximately 500 people die of unintentional, nonfire-related CO exposure, and another 15,000 individuals visit emergency rooms for treatment from exposure to CO gas.

Despite our current knowledge of scenarios and products that lead to CO poisoning, questions remain about when and how individuals use CO-emitting products, why they engage in certain risk behaviors, how best to inform them about the CO poisoning, and how receptive they are to existing prevention materials. This study aims to address these questions through assessing the basis for current audience knowledge, attitudes, and practices and, ultimately, strengthen educational materials about CO poisoning prevention.

The study will employ the use of qualitative methods during three phases of data collection. Phase I will consist of eight in-person focus groups among home furnace owners and portable generator owners (n=64) as well as four telephone interviews with organizations that serve populations at risk for CO poisoning (n=4). Phase II will consist of analyzing previously collected data on consumer media usage and preferences. Phase III will consist of 16 in-person triad interviews (3 individuals per interview) with home furnace owners and portable generator owners (n=48) to pretest CO poisoning educational materials.

NCEH will identify individuals for the focus groups and triad interviews using recruiting firms that specialize in the two at-risk populations: 1. home furnace owners and 2. portable generator owners. Individuals in these two groups will be screened over the telephone by the recruiting firms, and if they meet the eligibility criteria, will be invited to participate in the study. At the end of each focus group and triad interview, NCEH will ask participants to complete a brief exit questionnaire on demographics and media usage.

There is no cost to respondents other than their time.

ESTIMATED ANNUALIZED BURDEN HOURS

| Respondents (focus group, phone interview, and triad participants) | Instrument type | Number of respondents | Number of responses per respondent | Average burden per response (in hours) | Total burden (in hours) |
|---|---|---|---|---|---|
| Owners of Gas or Oil Burning Household Appliances. | Focus Group Screener | 64 | 1 | 10/60 | 11 |
| | Focus Group | 32 | 1 | 2 | 64 |
| | Exit Questionnaire | 32 | 1 | 10/60 | 5 |
| | Triad Screener | 48 | 1 | 10/60 | 8 |
| | Triad | 24 | 1 | 2 | 48 |
| Owners of Portable Gas Burning Generator. | Focus Group Screener | 64 | 1 | 10/60 | 11 |
| | Focus Group | 32 | 1 | 2 | 64 |
| | Exit Questionnaire | 32 | 1 | 10/60 | 5 |
| | Triad Screener | 48 | 1 | 10/60 | 8 |
| | Triad | 24 | 1 | 2 | 48 |
| Expert | Telephone Interview | 4 | 1 | 1 | 4 |
| Total | | | | | 276 |

Dated: September 11, 2008.

**Maryam Daneshvar,**

*Acting Reports Clearance Officer, Centers for Disease Control and Prevention.*

[FR Doc. E8–21690 Filed 9–16–08; 8:45 am]

**BILLING CODE 4163–18–P**

## DEPARTMENT OF HEALTH AND HUMAN SERVICES

### Food and Drug Administration

**[Docket No. FDA–2008–N–0490]**

### Agency Information Collection Activities; Proposed Collection; Comment Request; Voluntary Cosmetic Registration Program

**AGENCY:** Food and Drug Administration, HHS.

**ACTION:** Notice.

**SUMMARY:** The Food and Drug Administration (FDA) is announcing an opportunity for public comment on the proposed collection of certain information by the agency. Under the Paperwork Reduction Act of 1995 (the PRA), Federal agencies are required to publish notice in the **Federal Register** concerning each proposed collection of information, including each proposed extension of an existing collection of information, and to allow 60 days for public comment in response to the notice. This notice solicits comments on the collection of information associated with the Voluntary Cosmetic Registration Program.

**DATES:** Submit written or electronic comments on the collection of information by November 17, 2008.

**ADDRESSES:** Submit electronic comments on the collection of information to *http://www.regulations.gov*. Submit written comments on the collection of information to the Division of Dockets Management (HFA–305), Food and Drug Administration, 5630 Fishers Lane, rm. 1061, Rockville, MD 20852. All comments should be identified with the docket number found in brackets in the heading of this document.

**FOR FURTHER INFORMATION CONTACT:** Jonna Capezzuto, Office of Information Management (HFA–710), Food and Drug Administration, 5600 Fishers Lane, Rockville, MD 20857, 301–796–3794.

**SUPPLEMENTARY INFORMATION:** Under the PRA (44 U.S.C. 3501–3520), Federal agencies must obtain approval from the Office of Management and Budget (OMB) for each collection of information they conduct or sponsor. ''Collection of information'' is defined in 44 U.S.C. 3502(3) and 5 CFR 1320.3(c) and includes agency requests or requirements that members of the public submit reports, keep records, or provide information to a third party. Section 3506(c)(2)(A) of the PRA (44 U.S.C. 3506(c)(2)(A)) requires Federal agencies to provide a 60-day notice in the **Federal Register** concerning each proposed collection of information, including each proposed extension of an existing collection of information, before submitting the collection to OMB for approval. To comply with this requirement, FDA is publishing notice of the proposed collection of information set forth in this document.

With respect to the following collection of information, FDA invites comments on these topics: (1) Whether the proposed collection of information is necessary for the proper performance of FDA's functions, including whether the information will have practical utility; (2) the accuracy of FDA's estimate of the burden of the proposed collection of information, including the validity of the methodology and assumptions used; (3) ways to enhance the quality, utility, and clarity of the information to be collected; and (4) ways to minimize the burden of the collection of information on respondents, including through the use of automated collection techniques, when appropriate, and other forms of information technology.

**Voluntary Cosmetic Registration Program—21 CFR Part 720 (OMB Control Number 0910–0030)—Extension**

The Federal Food, Drug, and Cosmetic Act (the act) provides FDA with the authority to regulate cosmetic products in the United States. Cosmetic products that are adulterated under section 601 of the act (21 U.S.C. 361) or misbranded under section 602 of the act (21 U.S.C. 362) may not be distributed in interstate commerce. To assist FDA in carrying out its responsibility to regulate cosmetics, the agency has developed the Voluntary Cosmetic Registration Program (VCRP). In part 720 (21 CFR part 720), FDA requests that firms that manufacture, pack, or distribute cosmetics file with the agency an ingredient statement for each of their products. Ingredient statements for new submissions (§§ 720.1 through 720.4) are reported on Form FDA 2512, ''Cosmetic Product Ingredient Statement,'' and on Form FDA 2512a, a continuation form. Amendments to product formulations (§§ 720.3, 720.4, and 720.6) also are reported on Forms FDA 2512 and FDA 2512a. When a firm discontinues the commercial distribution of a cosmetic, FDA requests that the firm file Form FDA 2514, ''Discontinuance of Commercial Distribution of Cosmetic Product Formulation'' (§§ 720.3 and 720.6). If any of the information submitted on or with these forms is confidential, the firm may submit a request for confidentiality under § 720.8.

FDA's online filing system, intended to make it easier to participate in the VCRP, was made available industry-wide on December 1, 2005. The online filing system is available on FDA's VCRP Web site at *http://www.cfsan.fda.gov/~dms/cos-regn.html*. The online filing system contains the electronic versions of Forms FDA 2512, 2512a, and 2514, which are collectively found within the electronic version of Form FDA 2512. The agency strongly encourages electronic filing of Form FDA 2512 because it is faster and more convenient. A filing facility will receive confirmation of electronic filing by e-mail. Submission of the paper version of Forms FDA 2512, 2512a, and 2514 remains an option as described in *http://www.cfsan.fda.gov/~dms/cos-reg2.html*. However, due to the high volume of online participation, the VCRP is allocating its limited resources primarily to electronic filings.

FDA places cosmetic product filing information in a computer data base and uses the information for evaluation of cosmetic products currently on the market. Because filing of cosmetic product formulations is not mandatory, voluntary filings provide FDA with the best information available about cosmetic product ingredients and their frequency of use, businesses engaged in the manufacture and distribution of cosmetics, and approximate rates of product discontinuance and formula modifications. The information assists FDA scientists in evaluating reports of alleged injuries and adverse reactions from the use of cosmetics. The information also is used in defining and planning analytical and toxicological studies pertaining to cosmetics.

Information from the database is releasable to the public under FDA compliance with the Freedom of Information Act. FDA shares nonconfidential information from its files on cosmetics with consumers, medical professionals, and industry.

FDA estimates the burden of this collection of information as follows:

TABLE 1.—ESTIMATED ANNUAL REPORTING BURDEN[1]

| 21 CFR Section | Form No. | No. of Respondents | Annual Frequency per Response | Total Annual Responses | Hours per Response | Total Hours |
|---|---|---|---|---|---|---|
| 720.1 through 720.4 (new submissions) | FDA 2512[2] | 141 | 31 | 4371 | 0.33 | 1,442 |
| 720.4 and 720.6 (amendments) | FDA 2512 | 109 | 7 | 763 | 0.17 | 130 |
| 720.3, 720.6 (notices of discontinuance) | FDA 2512 | 55 | 41 | 2,255 | 0.1 | 226 |
| 720.8 (requests for confidentiality) | | 1 | 1 | 1 | 1.5 | 1.5 |
| Total | | | | | | 1,800 |

[1] There are no capital costs or operating and maintenance costs associated with this collection of information.
[2] The term "Form FDA 2512" refers to both the paper Forms FDA 2512, 2512a, and 2514 and electronic Form FDA 2512 in the electronic system known as the Voluntary Cosmetic Registration Program, which is available at *http://www.cfsan.fda.gov/~dms/cos-regn.html*.

The estimated number of respondents is based on submissions received from fiscal years 2005 to 2007. The estimated time required for each submission is based upon information from cosmetic industry personnel and FDA experience entering data submitted on paper Forms FDA 2512, 2512a, and 2514. The increase in total annual responses is due to increased participation by cosmetic companies, because of a renewed industry commitment to the program, and implementation of the online filing system on December 1, 2005. The decrease in hours per response is due to the ease of online filing.

Please note that on January 15, 2008, the FDA Division of Dockets Management Web site transitioned to the Federal Dockets Management System (FDMS). FDMS is a Government-wide, electronic docket management system. Electronic comments or submissions will be accepted by FDA only through FDMS at *http://www.regulations.gov*.

Dated: September 10, 2008.

**Jeffrey Shuren,**

*Associate Commissioner for Policy and Planning.*

[FR Doc. E8–21617 Filed 9–16–08; 8:45 am]

**BILLING CODE 4160–01–S**

## DEPARTMENT OF HEALTH AND HUMAN SERVICES

### Food and Drug Administration

**[Docket No. FDA–2008–N–0487]**

### Agency Information Collection Activities; Proposed Collection; Comment Request; Food Safety Survey

**AGENCY:** Food and Drug Administration, HHS.

**ACTION:** Notice.

**SUMMARY:** The Food and Drug Administration (FDA) is announcing an opportunity for public comment on the proposed collection of certain information by the agency. Under the Paperwork Reduction Act of 1995 (the PRA), Federal agencies are required to publish notice in the **Federal Register** concerning each proposed collection of information, including each proposed reinstatement of an existing collection of information, and to allow 60 days for public comment in response to the notice. This notice solicits comments on a voluntary consumer survey about food safety.

**DATES:** Submit written or electronic comments on the collection of information by November 17, 2008.

**ADDRESSES:** Submit electronic comments on the collection of information to *http://www.regulations.gov*. Submit written comments on the collection of information to the Division of Dockets Management (HFA–305), Food and Drug Administration, 5630 Fishers Lane, rm. 1061, Rockville, MD 20852. All comments should be identified with the docket number found in brackets in the heading of this document.

**FOR FURTHER INFORMATION CONTACT:** Jonna Capezzuto, Office of Information Management (HFA–710), Food and Drug Administration, 5600 Fishers Lane, Rockville, MD 20857, 301–796–3794.

**SUPPLEMENTARY INFORMATION:**

### I. Background

Under the PRA (44 U.S.C. 3501–3520), Federal agencies must obtain approval from the Office of Management and Budget (OMB) for each collection of information they conduct or sponsor. "Collection of information" is defined in 44 U.S.C. 3502(3) and 5 CFR 1320.3(c) and includes agency requests or requirements that members of the public submit reports, keep records, or provide information to a third party. Section 3506(c)(2)(A) of the PRA (44 U.S.C. 3506(c)(2)(A)) requires Federal agencies to provide a 60-day notice in the **Federal Register** concerning each proposed collection of information, including each proposed reinstatement of an existing collection of information, before submitting the collection to OMB for approval. To comply with this requirement, FDA is publishing notice of the proposed collection of information set forth in this document.

With respect to the following collection of information, FDA invites comments on these topics: (1) Whether the proposed collection of information is necessary for the proper performance of FDA's functions, including whether the information will have practical utility; (2) the accuracy of FDA's estimate of the burden of the proposed collection of information, including the validity of the methodology and assumptions used; (3) ways to enhance the quality, utility, and clarity of the information to be collected; and (4) ways to minimize the burden of the collection of information on respondents, including through the use of automated collection techniques, when appropriate, and other forms of information technology.

### Food Safety Survey (OMB Control Number 0910–0345—Reinstatement)

Under section 903(b)(2) of the Federal Food, Drug, and Cosmetic Act (21 U.S.C. 393(b)(2)), FDA is authorized to conduct research relating to foods and to conduct educational and public information programs relating to the safety of the nation's food supply. The Food Safety Survey is a nationally

representative survey of consumers' knowledge, attitudes, and beliefs about food safety. Previous versions of the survey were collected in 1988, 1993, 1998, 2001, and 2006. Data from the previous surveys are being used to evaluate two Healthy People 2010 objectives: (1) Increase the proportion of consumers who follow key food safety practices (Objective 10–5), and (2) reduce severe allergic reactions to food among adults (Objective 10–4b). Additionally, data are used to measure trends in consumer food safety habits including hand and cutting board washing, cooking practices, and use of food thermometers. Finally, data are used to evaluate educational messages and to inform policymakers about consumer attitudes about novel technologies such as food irradiation and biotechnology.

Since 2006, there have been several high profile recalls of FDA-regulated food due to contamination. Information about food recalls does not always reach the intended audience (Refs. 1, 2, and 3). The Food Safety Survey planned for 2009 will look specifically at reasons why consumers do not always heed food recall alerts. A new food recall module will be added that contains new questions to learn about how recent food recalls have affected consumer confidence in the food supply and what effect, if any, they have on consumers' home food safety behaviors. This information will help FDA develop strategies to more effectively communicate food recall information to the public.

The methods for the 2009 version of the Food Safety Survey will be the same as for the previous Food Safety Surveys. A nationally representative sample of 4,000 adults in households with telephones will be selected at random and interviewed by telephone. This survey will include an oversample of Hispanics with a minimum of 500 Hispanics sampled. Additionally, 200 initial non-respondents will be asked to participate in a short version of the survey to conduct a non-response analysis. Participation will be voluntary. Cognitive interviews and a pre-test will be conducted prior to fielding the survey.

FDA estimates the burden of this collection of information as follows:

TABLE 1—ESTIMATED ANNUAL REPORTING BURDEN[1]

| Activity | No. of Respondents | Annual Frequency per Response | Total Annual Responses | Hours per Response | Total Hours |
|---|---|---|---|---|---|
| Cognitive Interviews | 20 | 1 | 20 | 1 | 20 |
| Pretest | 27 | 1 | 27 | 0.5 | 14 |
| Screener | 10,000 | 1 | 10,000 | .0167 | 167 |
| Survey | 4,000 | 1 | 4,000 | .30 | 1,200 |
| Non-response | 200 | 1 | 200 | .10 | 20 |
| Total | | | | | 1,421 |

[1] There are no capital costs or operating and maintenance costs associated with this collection of information.

FDA's burden estimate is based on the agency's prior experience with the Food Safety Survey.

Please note that on January 15, 2008, the FDA Division of Dockets Management Web site transitioned to the Federal Dockets Management System (FDMS). FDMS is a Government-wide, electronic docket management system. Electronic comments or submissions will be accepted by FDA only through FDMS at *http://www.regulations.gov*.

## II. References

1. Cuite, C.L., S.C. Condry, M.L. Nucci, W.K. Hallman. ''Public Response to the Contaminated Spinach Recall of 2006.'' (Publication number RR–0107–013), 2007. New Brunswick, NJ: Rutgers, the State University of New Jersey, Food Policy Institute.

2. Mahon, B.E., L. Slutsker, L. Hutwagner, C. Drenzek, K. Maloney, K. Toomey, P.M. Griffin. ''Consequences in Georgia of a Nationwide Outbreak of *Salmonella* Infections: What You Don't Know Might Hurt You.'' *American Journal of Public Health*. 89(1):31–35, 1999.

3. Patrick, M.E., P.M. Griffin, A.C. Voetsch, P.S. Mead, ''Effectiveness of Recall Notification: Community Response to a Nationwide Recall of Hot Dogs and Deli Meats.'' *Journal of Food Protection*. 70(10):2373–2376, 2007.

Dated: September 10, 2008.

**Jeffrey Shuren,**

*Associate Commissioner for Policy and Planning.*

[FR Doc. E8–21624 Filed 9–16–08; 8:45 am]

BILLING CODE 4160–01–S

## DEPARTMENT OF HEALTH AND HUMAN SERVICES

### Health Resources and Services Administration

### Part C Early Intervention Services Grant

**AGENCY:** Health Resources and Services Administration, HHS.

**ACTION:** Notice of Non-competitive Program Expansion Supplemental Award.

**SUMMARY:** The Health Resources and Services Administration (HRSA) will be providing temporary critical HIV medical care and treatment services through GLH Magnolia Medical Clinic to avoid a disruption of HIV clinical care to clients in Bolivar, Sunflower and Washington counties in Mississippi.

**SUPPLEMENTARY INFORMATION:**

*Intended recipient of the award:* GLH Magnolia Medical Clinic, Greenwood, Mississippi.

*Amount of the award:* $97,500 to ensure ongoing clinical services to the target population.

*Authority:* Section 2651 of the Public Health Service Act, 42 U.S.C. 300ff–51.

*CFDA Number:* 93.918.

*Project period:* The period of supplemental support is from September 1, 2008, to December 31, 2008.

*Justification for the Exception to Competition:* Critical funding for HIV medical care and treatment services to clients in Bolivar, Sunflower and Washington Counties in Mississippi will be continued through a noncompetitive program expansion supplement to an existing grant award to GLH Magnolia Medical Clinic in Greenwood, Mississippi. This is a

temporary award because the previous grant recipient serving this population notified HRSA that it would not continue in the program after the fiscal year (FY) 2008 award was made. GLH Magnolia Medical clinic is the best qualified grantee for this supplement, since it serves many of the former grantee's patients and is the closest Part C Program to the former grantee. Further funding beyond December 31, 2008, for this service area will be competitively awarded during the next Part C HIV Early Intervention Service (EIS) competing application process for FY 2009.

**FOR FURTHER INFORMATION CONTACT:** Kathleen Treat, via e-mail *ktreat@hrsa.gov*, or via telephone, 301–443–0493.

Dated: September 10, 2008.

**Elizabeth M. Duke,**

*Administrator.*

[FR Doc. E8–21754 Filed 9–16–08; 8:45 am]

**BILLING CODE 4165–15–P**

## DEPARTMENT OF HEALTH AND HUMAN SERVICES

### Health Resources and Services Administration

### Maternal and Child Health Services; Universal Newborn Hearing Screening and Intervention Program

**AGENCY:** Health Resources and Services Administration, HHS.

**ACTION:** Notice of noncompetitive program expansion supplemental award.

**SUMMARY:** The National Center for Hearing Assessment and Management (NCHAM) at Utah State University is the national resource center for the Universal Newborn Hearing Screening and Intervention Program. Funds will be used to provide technical assistance and training for physiologic hearing screening services in Early Head Start and Head Start programs in 17 States with plans to expand to 3 additional States.

**SUPPLEMENTARY INFORMATION:** *Intended Recipient of the Award:* The National Center for Hearing Assessment and Management (NCHAM) at Utah State University.

*Amount of Supplemental Award(s)*: The amount of the supplemental award is $400,000. Based on satisfactory performance, continued need, and availability of funds, a second and final non-competitive supplemental award for this activity may be awarded for 12 additional months.

*Authority:* Section 349 of the Public Health Service Act.

*CFDA Number:* 93.251.

*Project Period:* The project period for this cooperative agreement is April 1, 2005, through March 31, 2010. The period of supplemental support for this award is from September 1, 2008, through March 31, 2009.

**FOR FURTHER INFORMATION CONTACT:** Irene Forsman, via e-mail: *iforsman@hrsa.gov* or via telephone 301–443–2370.

*Justification for the Exception to Competition:* The National Center for Hearing Assessment and Management (NCHAM) at Utah State University is the national resource center for the Universal Newborn Hearing Screening and Intervention program. They successfully applied for funds to support a program of national technical assistance in 2000 and again in 2004. There were no other applicants for this cooperative agreement in either competition. There is no other organization providing technical assistance to State-based Early Hearing Detection and Intervention (EHDI) programs.

In 2001, the Health Services and Resources Administration's (HRSA) Maternal and Child Health Bureau (MCHB) entered into a 3-year Intra-Agency Agreement with the Administration on Children and Families (ACF) Office of Head Start (OHS) to provide physiologic hearing screening services to Migrant and Native American Early Head Start sites in 3 States. NCHAM was awarded a supplemental grant to develop training materials for the staff and provided technical assistance and support. Since 2005, ACF/OHS has supported NCHAM through a one-time award which cannot be renewed. In that time period, NCHAM successfully expanded the screening program to 17 States. ACF/OHS has submitted an Intra-Agency Agreement to HRSA/MCHB to continue the work in 17 States and to expand to 3 additional States.

NCHAM is unique in its technical assistance capacity to provide the type of services for the training. Since it is the national center that supports the EHDI program, it is well positioned to catalyze significant relationships between community-based Head Start programs and State-wide EHDI programs. The resource center has a regionalized system of audiologists, each of whom has responsibility for several States. NCHAM has developed multiple training mechanisms including manuals, CDs and a Web site (*infanthearing.org*) rich in resources to assist health providers, educators of the deaf, families, policymakers and others involved in providing timely and appropriate screening, diagnosis and intervention services for infants and children with hearing loss and their families. There is no other entity providing these services, nor has any other entity expressed interest in doing so. For the reasons identified above, the HRSA is awarding the supplemental funds non-competitively.

Dated: September 10, 2008.

**Elizabeth M. Duke,**

*Administrator.*

[FR Doc. E8–21753 Filed 9–16–08; 8:45 am]

**BILLING CODE 4165–15–P**

## DEPARTMENT OF HEALTH AND HUMAN SERVICES

### National Institutes of Health

### Center for Scientific Review; Notice of Closed Meetings Pursuant to Section 10(d) of the Federal Advisory Committee Act, as Amended (5 U.S.C. Appendix 2), Notice Is Hereby Given of the Following Meetings

The meetings will be closed to the public in accordance with the provisions set forth in sections 552b(cX4) and 552b(cX6), Title 5 U.S.C., as amended. The grant applications and the discussions could disclose confidential trade secrets or commercial property such as patentable material, and personal information concerning individuals associated with the grant applications, the disclosure of which would constitute a clearly unwarranted invasion of personal privacy.

*Name of Committee:* Renal and Urological Studies Integrated Review Group, Pathobiology of Kidney Disease Study Section.

*Date:* October 2, 2008.

*Time:* 8:30 a.m. to 6 p.m.

*Agenda:* To review and evaluate grant applications.

*Place:* Hotel Rouge, 1315 16th Street, NW., Washington, DC 20036.

*Contact Person:* Krystyna E. Rys-Sikora, PhD, Scientific Review Officer, Center for Scientific Review, National Institutes of Health, 6701 Rockledge Drive, Room 4016J, MSC 7814, Bethesda, MD 20892, 301–451–1325, *ryssokok@csr.nih.gov.*

This notice is being published less than 15 days prior to the meeting due to the timing limitations imposed by the review and funding cycle.

*Name of Committee:* Health of the Population Integrated Review Group, Epidemiology of Cancer Study Section.

*Date:* October 2–3, 2008.

*Time:* 8:30 a.m. to 5 p.m.

*Agenda:* To review and evaluate grant applications

*Place:* The William F. Bolger Center, 9600 Newbridge Drive, Potomac, MD 20854.

*Contact Person:* Denise Wiesch, PhD, Scientific Review Officer, Center for Scientific Review, National Institutes of Health, 6701 Rockledge Drive, Room 3150, MSC 7770, Bethesda, MD 20892, (301) 435–0684. *wieschd@csr.nih.gov.*

This notice is being published less than 15 days prior to the meeting due to the timing limitations imposed by the review and funding cycle.

*Name of Committee:* Musculoskeletal, Oral and Skin Sciences Integrated Review Group, Skeletal Biology Structure and Regeneration Study Section.

*Date:* October 6–7, 2008.

*Time:* 8 a.m. to 5 p.m.

*Agenda:* To review and evaluate grant applications.

*Place:* Latham Hotel, 3000 M Street, NW., Washington, DC 20007.

*Contact Person:* Mehrdad M. Tondravi, PhD, Scientific Review Officer Center for Scientific Review, National Institutes of Health, 6701 Rockledge Drive, Room 4108, MSC 7814, Bethesda, MD 20892, 301–435–1173, *tondravni@csr.nih.gov.*

This notice is being published less than 15 days prior to the meeting due to the timing limitations imposed by the review and funding cycle.

*Name of Committee:* Renal and Urological Studies Integrated Review Group, Cellular and Molecular Biology of the Kidney Study Section.

*Date:* October 7, 2008.

*Time:* 8 a.m. to 5 p.m.

*Agenda:* To review and evaluate grant applications.

*Place:* Savoy Suites Hotel, 2505 Wisconsin Avenue, NW., Washington, DC 20007.

*Contact Person:* Shirley Hilden, PhD, Scientific Review Officer Center for Scientific Review, National Institutes of Health, 6701 Rockledge Drive, Room 4218, MSC 7814, Bethesda, MD 20892, (301) 435–1198, *hildens@csr.nih.gov.*

*Name of Committee:* Oncological Sciences Integrated Review Group, Tumor Progression and Metastasis Study Section.

*Date:* October 9–10, 2008.

*Time:* 8 a.m. to 5 p.m.

*Agenda:* To review and evaluate grant applications.

*Place:* Le Meridien Hotel, 333 Battery Street, The Currency Room, San Francisco, CA 94111.

*Contact Person:* Manzoor Zarger, MS, PhD, Scientific Review Officer Center for Scientific Review, National Institutes of Health, 6701 Rockledge Drive, Room 6208, MSC 7804, Bethesda, MD 20892, (301) 435–2477, *zargerma@csr.nift.gov.*

*Name of Committee:* Musculoskeletal, Oral and Skin Sciences Integrated Review Group, Musculoskeletal Rehabilitation Sciences Study Section.

*Date:* October 9–10, 2008.

*Time:* 8 p.m. to 4 p.m.

*Agenda:* To review and evaluate grant applications.

*Place:* Hilton Old Town Alexandria, 1767 King Street, Alexandria, VA 22314.

*Contact Person:* Jo Pelham, B.A., Scientific Review Officer, Center for Scientific Review, National Institutes of Health, 6701 Rockledge Drive, Room 4102, MSC 7814, Bethesda, MD 20892, (301) 435–1786, *pelhamj@csr.nih.gov.*

*Name of Committee:* Center for Scientific Review Special Emphasis Panel, Skeletal Muscle Clinical, Pre-Clinical and Small Business Review.

*Date:* October 10, 2008.

*Time:* 8:30 a.m. to 1 p.m.

*Agenda:* To review and evaluate grant applications.

*Place:* The William F. Bolger Center, 9600 Newbridge Drive, Potomac, MD 20854.

*Contact Person:* Richard J. Bartlett, PhD, Scientific Review Officer, Center for Scientific Review, National Institutes of Health, 6701 Rockledge Drive, Room 4110, MSC 7814, Bethesda, MD 20892, 301–435–6809, *bartletr@csr.nih.gov.*

*Name of Committee:* Center for Scientific Review Special Emphasis Panel, Diabetes, Obesity and Nutrition.

*Date:* October 15, 2008.

*Time:* 10 a.m. to 3 p.m.

*Agenda:* To review and evaluate grant applications.

*Place:* National Institutes of Health, 6701 Rockledge Drive, Bethesda, MD 20892. (Virtual Meeting)

*Contact Person:* Krish Krishnan, PhD, Scientific Review Officer, Center for Scientific Review, National Institutes of Health, 6701 Rockledge Drive, Room 6164, MSC 7892, Bethesda, MD 20892, (301) 435–1041, *krishnak@csr.nih.gov.*

*Name of Committee:* Biobehavioral and Behavioral Processes Integrated Review Group, Cognition and Perception Study Section.

*Date:* October 16–17, 2008.

*Time:* 8 a.m. to 6:30 p.m.

*Agenda:* To review and evaluate grant applications.

*Place:* DoubleTree Hotel, 1515 Rhode Island Avenue, NW., Washington, DC 20005.

*Contact Person:* Cheri Wiggs, PhD, Scientific Review Officer, Center for Scientific Review, National Institutes of Health, 6701 Rockledge Drive, Room 3180, MSC 7848, Bethesda, MD 20892, (301) 435–1261, *wiggsc@csr.nih.gov.*

*Name of Committee:* Center for Scientific Review Special Emphasis Panel Systemic Injury by Environmental Exposure.

*Date:* October 16, 2008.

*Time:* 8 a.m. to 5 p.m.

*Agenda:* To review and evaluate grant applications.

*Place:* National Institutes of Health, 6701 Rockledge Drive, Bethesda, MD 20892.

*Contact Person:* Patricia Greenwel, PhD, Scientific Review Officer, Center for Scientific Review, National Institutes of Health, 6701 Rockledge Drive, Room 2174, MSC 7818, Bethesda, MD 20892, 301–435–1169, *greenwep@csr.nih.gov.*

*Name of Committee:* Cardiovascular Sciences Integrated Review Group, Cardiovascular Differentiation and Development Study Section.

*Date:* October 16, 2008.

*Time:* 8 a.m. to 8 p.m.

*Agenda:* To review and evaluate grant applications.

*Place:* Savoy Suites Hotel, 2505 Wisconsin Avenue, NW., Washington, DC 20007.

*Contact Person:* Maqsood A. Wani, PhD DVM, Scientific Review Officer, Center for Scientific Review, National Institutes of Health, 6701 Rockledge Drive, Room 4136, MSC 7814, Bethesda, MD 20892, 301–435–2270, *wanimaqs@csr.nih.gov.*

*Name of Committee:* Center for Scientific Review Special Emphasis Panel.

*Member Conflict:* Behavioral Interventions, Cognitive and Interpersonal Processes.

*Date:* October 16, 2008.

*Time:* 8 a.m. to 5 p.m.

*Agenda:* To review and evaluate grant applications.

*Place:* National Institutes of Health, 6701 Rockledge Drive, Bethesda, MD 20892. (Virtual Meeting).

*Contact Person:* Gabriel B. Fosu, PhD, Scientific Review Officer, Center for Scientific Review, National Institutes of Health, 6701 Rockledge Drive, Room 3215, MSC 7808, Bethesda, MD 20892, (301) 435–3562, *fosug@csr.nih.gov.*

*Name of Committee:* Center for Scientific Review Special Emphasis Panel Bioethics.

*Date:* October 16, 2008.

*Time:* 8 a.m. to 5 p.m.

*Agenda:* To review and evaluate grant applications.

*Place:* Georgetown Suites, 1000 29th Street, NW., Washington, DC 20007.

*Contact Person:* Susan F. Marden, PhD, Scientific Review Officer, Center for Scientific Review, National Institutes of Health, 6701 Rockledge Drive, Room 3172, MSC 7770, Bethesda, MD 20892, 301–435–1712, *mardens@mail.nih.gov.*

*Name of Committee:* Emerging Technologies and Training Neurosciences, Integrated Review Group Molecular Neurogenetics Study Section.

*Date:* October 16–17, 2008.

*Time:* 8 a.m. to 5 p.m.

*Agenda:* To review and evaluate grant applications.

*Place:* One Washington Circle Hotel, One Washington Circle, NW., Washington, DC 20037.

*Contact Person:* Paek-Gyu Lee, PhD, Scientific Review Officer, Center for Scientific Review, National Institutes of Health, 6701 Rockledge Drive, Room 5203, MSC 7812, Bethesda, MD 20892, (301) 435–0902, *leepg@csr.nih.gov.*

*Name of Committee:* Hematology Integrated Review Group Erythrocyte and Leukocyte Biology Study Section.

*Date:* October 16, 2008.

*Time:* 8 a.m. to 4 p.m.

*Agenda:* To review and evaluate grant applications.

*Place:* Hotel Kabuki, 1625 Post Street, San Francisco, CA 94115.

*Contact Person:* Delia Tang, MD, Scientific Review Officer, Center for Scientific Review, National Institutes of Health, 6701 Rockledge Drive, Room 4126, MSC 7802, Bethesda, MD 20892, 301–435–2506, *tangd@csr.nih.gov.*

*Name of Committee:* Biological Chemistry and Macromolecular Biophysics Integrated Review Group Macromolecular Structure and Function E Study Section.

*Date:* October 16, 2008.

*Time:* 8 a.m. to 6 p.m.

*Agenda:* To review and evaluate grant applications.

*Place:* Holiday Inn Georgetown, 2101 Wisconsin Avenue, NW., Washington, DC 20007.

*Contact Person:* Nitsa Rosenzweig, PhD, Scientific Review Officer, Center for Scientific Review, National Institutes of Health, 6701 Rockledge Drive, Room 1102, MSC 7760, Bethesda, MD 20892, (301) 435–1747, *rosenzweign@csr.nih.gov.*

*Name of Committee:* Cardiovascular Sciences Integrated Review Group, Clinical and Integrative Cardiovascular Sciences Study Section.

*Date:* October 16–17, 2008.

*Time:* 8 a.m. to 5 p.m.

*Agenda:* To review and evaluate grant applications.

*Place:* The Melrose Hotel, 2430 Pennsylvania Avenue, NW., Washington, DC 29937.

*Contact Person:* Russell T. Dowell, PhD, Scientific Review Officer, Center for Scientific Review, National Institutes of Health, 6701 Rockledge Drive, Room 4128, MSC 7814, Bethesda, MD 20892, 301–435–1850, *dowellr@csr.nih.gov.*

*Name of Committee:* Health of the Population Integrated Review Group, Social Sciences and Population Studies Study Section.

*Date:* October 16, 2008.

*Time:* 8 a.m. to 7 p.m.

*Agenda:* To review and evaluate grant applications.

*Place:* Serrano Hotel, 405 Taylor Street, San Francisco, CA 94102.

*Contact Person:* Bob Weller, PhD, Scientific Review Officer, Center for Scientific Review, National Institutes of Health, 6701 Rockledge Drive, Room 3160, MSC 7770, Bethesda, MD 20892, (301) 435–0694, *wellerr@csr.nih.gov.*

*Name of Committee:* Infectious Diseases and Microbiology Integrated Review Group, Pathogenic Eukaryotes Study Section.

*Date:* October 16–17, 2008.

*Time:* 8 a.m. to 5 p.m.

*Agenda:* To review and evaluate grant applications.

*Place:* Admiral Fell Inn, 888 S. Broadway, Baltimore, MD 21231.

*Contact Person:* Tera Bounds, DVM, PhD, Scientific Review Officer, Center for Scientific Review, National Institutes of Health,6701 Rockledge Drive, Room 3198, MSC 7808, Bethesda, MD 20892, (301) 435–2306, *boundst@csr.nih.gov.*

*Name of Committee:* Health of the Population Integrated Review Group, Cardiovascular and Sleep Epidemiology Study Section.

*Date:* October 16–17, 2008.

*Time:* 8:30 a.m. to 5 p.m.

*Agenda:* To review and evaluate grant applications.

*Place:* The Allerton Hotel Chicago, 701 North Michigan Avenue, Chicago, IL 60611.

*Contact Person:* J. Scott Osborne, PhD, MPH Scientific Review Officer, Center for Scientific Review,National Institutes of Health, 6701 Rockledge Drive, Room 4114, MSC 7816, Bethesda, MD 20892, (301) 435–1782, *osbornes@csr.nih.gov.*

*Name of Committee:* Health of the Population, Integrated Review Group, Health Services Organization and Delivery Study Section.

*Date:* October 16–17, 2008.

*Time:* 8:30 a.m. to 5:30 p.m.

*Agenda:* To review and evaluate grant applications.

*Place:* Serrano Hotel, 405 Taylor Street, San Francisco, CA 94102.

*Contact Person:* Kathy Salaita, SCD Scientific Review Officer, Center for Scientific Review, National Institutes of Health,6701 Rockledge Drive, Room 3172, MSC 7770, Bethesda, MD 20892. 301–451–8504, *salaitak@csr.nih.gov.*

*Name of Committee:* Hematology Integrated Review Group, Hemostasis and Thrombosis Study Section.

*Date:* October 16, 2008.

*Time:* 8:30 a.m. to 5 p.m.

*Agenda:* To review and evaluate grant applications.

*Place:* Holiday Inn Hotel, San Francisco Fisherman's Wharf, 1300 Columbia Avenue,San Francisco, CA 94133.

*Contact Person:* Bukhtiar H. Shah, PhD, DVM, Scientific Review Officer, Center for Scientific Review, National Institutes of Health, 6701 Rockledge Drive, Room 4120, MSC 7802, Bethesda, MD 20892, (301) 435–1233, *shahb@csr.nih.gov.*

*Name of Committee:* Health of the Population Integrated Review Group, Community Influences on Health Behavior.

*Date:* October 16–17, 2008.

*Time:* 8:30 a.m. to 3 p.m.

*Agenda:* To review and evaluate grant applications.

*Place:* Hilton Alexandria Old Town, 1767 King Street, Alexandria, VA 22314.

*Contact Person:* Ellen K. Schwartz, EDD, Scientific Review Officer, Center for Scientific Review, National Institutes of Health, 6701 Rockledge Drive, Room 3168, MSC 7770, Bethesda, MD 20892, 301–435–0681, *schwarte@csr.nih.gov.*

*Name of Committee:* Risk, Prevention and Health Behavior Integrated Review Group, Risk, Prevention and Intervention for Addictions StudySection.

*Date:* October 16–17, 2008.

*Time:* 5:30 p.m. to 5 p.m.

*Agenda:* To review and evaluate grant applications.

*Place:* Holiday Inn Georgetown, 2101 Wisconsin Avenue, NW., Washington, DC 20007.

*Contact Person:* Gayle M. Boyd, PhD, Scientific Review Officer, Center for Scientific Review, National Institutes of Health,6701 Rockledge Drive, Room 3141, MSC 7808, Bethesda, MD 20892, 301–451–9956, *gboyd@mail.nih.gov.*

*Name of Committee:* Health of the Population Integrated Review Group, Biostatistical Methods and Research Design Study Section.

*Date:* October 17, 2008.

*Time:* 8:30 a.m. to 5 p.m.

*Agenda:* To review and evaluate grant applications.

*Place:* Serrano Hotel, 405 Taylor Street, San Francisco, CA 94102.

*Contact Person:* Ann Hardy, DRPH, Scientific Review Officer, Center for Scientific Review, National Institutes of Health, 6701 Rockledge Drive, Room 3158, MSC 7770, Bethesda, MD 20892, 301–435–0695, *hardyan@csr.nih.gov.*

(Catalogue of Federal Domestic Assistance Program Nos. 93.306, Comparative Medicine; 93.333, Clinical Research, 93.306, 93.333, 93.337, 93.393–93.396, 93.837–93.844, 93.846–93.878, 93.892, 93.893, National Institutes of Health, HHS)

Dated: September 9, 2008.

**Jennifer Spaeth,**

*Director, Office of Federal Advisory Committee Policy.*

[FR Doc. E8–21525 Filed 9–16–08; 8:45 am]

**BILLING CODE 4140–01–M**

---

## DEPARTMENT OF HEALTH AND HUMAN SERVICES

### National Institutes of Health

### National Center for Research Resources; Notice of Closed Meeting

Pursuant to section 10(d) of the Federal Advisory Committee Act, as amended (5 U.S.C. Appendix 2), notice is hereby given of the following meeting.

The meeting will be closed to the public in accordance with the provisions set forth in sections 552b(c)(4) and 552b(c)(6), Title 5 U.S.C., as amended. The grant applications and the discussions could disclose confidential trade secrets or commercial property such as patentable material, and personal information concerning individuals associated with the grant applications, the disclosure of which would constitute a clearly unwarranted invasion of personal privacy.

*Name of Committee:* National Center for Research Resources Special Emphasis Panel; Science Education Applications.

*Date:* October 14, 2008.

*Time:* 12 p.m. to 2 p.m.

*Agenda:* To review and evaluate grant applications.

*Place:* National Institutes of Health, One Democracy Plaza, 6701 Democracy Boulevard, Bethesda, MD 20892, (Telephone Conference Call).

*Contact Person:* Michael L. Bloom, PhD, Scientific Review Officer, Office of Review, National Center for Research Resources, 6701 Democracy Blvd., Room 1090, Bethesda, MD 20892, 301–435–0965, *bloomm2mail.nih.gov.*

(Catalogue of Federal Domestic Assistance Program Nos. 93.306, Comparative Medicine; 93.333, Clinical Research; 93.371, Biomedical Technology; 93.389, Research Infrastructure, 93.306, 93.333, National Institutes of Health, HHS)

Dated: September 8, 2008.

**Jennifer Spaeth,**

*Director, Office of Federal Advisory Committee Policy.*

[FR Doc. E8–21363 Filed 9–16–08; 8:45 am]

**BILLING CODE 4140–01–M**

## DEPARTMENT OF HEALTH AND HUMAN SERVICES

### National Institutes of Health

### National Institute of General Medical Sciences; Amended Notice of Meeting

Notice is hereby given of a change in the meeting of the National Advisory General Medical Sciences Council, September 18, 2008, 8:30 a.m. to September 19, 2008, 5 p.m., National Institutes of Health, Natcher Building, Conference Rooms E1 & E2, 9000 Rockville Pike, Bethesda, MD, 20892 which was published in the **Federal Register** on August 21, 2008, 73 FR 49468–49469.

The meeting will be open to the public on September 19, 2008 from 8:30 a.m. to adjournment. The meeting is partially closed to the public.

Dated: September 9, 2008.

**Jennifer Spaeth,**

*Director, Office of Federal Advisory Committee Policy.*

[FR Doc. E8–21524 Filed 9–16–08; 8:45 am]

BILLING CODE 4140–01–M

## DEPARTMENT OF HEALTH AND HUMAN SERVICES

### National Institutes of Health

### National Institute on Drug Abuse; Notice of Closed Meetings

Pursuant to section 10(d) of the Federal Advisory Committee Act, as amended (5 U.S.C. Appendix 2), notice is hereby given of the following meetings.

The meetings will be closed to the public in accordance with the provisions set forth in sections 552b(c)(4) and 552b(c)(6), Title 5 U.S.C., as amended. The grant applications and the discussions could disclose confidential trade secrets or commercial property such as patentable material, and personal information concerning individuals associated with the grant applications, the disclosure of which would constitute a clearly unwarranted invasion of personal privacy.

*Name of Committee:* National Institute on Drug Abuse Special Emphasis Panel, NIDA–L Conflicts.

*Date:* October 6, 2008.

*Time:* 3 p.m. to 6 p.m.

*Agenda:* To review and evaluate grant applications.

*Place:* Hyatt Regency Bethesda, One Bethesda Metro Center, 7400 Wisconsin Avenue, Bethesda, MD 20814.

*Contact Person:* Gerald L. McLaughlin, PhD, Scientific Review Administrator, Office of Extramural Affairs, National Institute on Drug Abuse, NIH, DHHS, Room 220, MSC 8401, 6101 Executive Blvd., Bethesda, MD 20892–8401, 301–402–6626, *gm145a@nih.gov.*

*Name of Committee:* National Institute on Drug Abuse Special Emphasis Panel, NIDA–E Conflicts A.

*Date:* October 7, 2008.

*Time:* 4 a.m. to 5:30 p.m.

*Agenda:* To review and evaluate grant applications.

*Place:* The Jurys Washington Hotel, 1500 New Hampshire Avenue, NW., Washington, DC 20036.

*Contact Person:* Mark Swieter, PhD, Chief, Training and Special Projects Review Branch, Office of Extramural Affairs, National Institute on Drug Abuse, NIH, DHHS, 6101 Executive Boulevard, Suite 220, Bethesda, MD 20892–8401, (301) 435–1389, *ms80x@nih.gov.*

*Name of Committee:* National Institute on Drug Abuse Special Emphasis Panel, NIDA F Conflicts.

*Date:* October 8, 2008.

*Time:* 8 a.m. to 6 p.m.

*Agenda:* To review and evaluate grant applications.

*Place:* Jurys Washington Hotel, 1500 New Hampshire Avenue, NW., Washington, DC 20036.

*Contact Person:* Gerald L. McLaughlin, PhD, Scientific Review Administrator, Office of Extramural Affairs, National Institute on Drug Abuse, NIH, DHHS, Room 220, MSC 8401, 6101 Executive Blvd., Bethesda, MD 20892–8401, 301–402–6626, *gm145a@nih.gov.*

*Name of Committee:* National Institute on Drug Abuse Special Emphasis Panel, NIDA–E Conflicts B.

*Date:* October 8, 2008.

*Time:* 9 a.m. to 10:30 a.m.

*Agenda:* To review and evaluate grant applications.

*Place:* The Jurys Washington Hotel, 1500 New Hampshire Avenue, NW., Washington, DC 20036.

*Contact Person:* Mark Swieter, PhD, Chief, Training and Special Projects Review Branch, Office of Extramural Affairs, National Institute on Drug Abuse, NIH, DHHS, 6101 Executive Boulevard, Suite 220, Bethesda, MD 20892–8401, (301) 435–1389, *ms80x@nih.gov.*

*Name of Committee:* National Institute on Drug Abuse Special Emphasis Panel, NIDA–E Conflicts C.

*Date:* October 8, 2008.

*Time:* 10:30 a.m. to 12 p.m.

*Agenda:* To review and evaluate grant applications.

*Place:* Jurys Washington Hotel, 1500 New Hampshire Ave, NW., Washington, DC 20036.

*Contact Person:* Mark Swieter, PhD, Chief, Training and Special Projects Review Branch, Office of Extramural Affairs, National Institute on Drug Abuse, NIH, DHHS, 6101 Executive Boulevard, Suite 220, Bethesda, MD 20892–8401, (301) 435–1389, *ms80x@nih.gov.*

(Catalogue of Federal Domestic Assistance Program Nos. 93.279, Drug Abuse and Addiction Research Programs, National Institutes of Health, HHS)

Dated: September 10, 2008.

**Jennifer Spaeth,**

*Director, Office of Federal Advisory Committee Policy.*

[FR Doc. E8–21626 Filed 9–16–08; 8:45 am]

BILLING CODE 4140–01–M

## DEPARTMENT OF HEALTH AND HUMAN SERVICES

### National Institutes of Health

### National Institute of Allergy and Infectious Diseases; Notice of Closed Meeting

Pursuant to section 10(d) of the Federal Advisory Committee Act, as amended (5 U.S.C. Appendix 2), notice is hereby given of the following meeting.

The meeting will be closed to the public in accordance with the provisions set forth in sections 552b(c)(4) and 552b(c)(6), Title 5 U.S.C., as amended. The grant applications and the discussions could disclose confidential trade secrets or commercial property such as patentable material, and personal information concerning individuals associated with the grant applications, the disclosure of which would constitute a clearly unwarranted invasion of personal privacy.

*Name of Committee:* National Institute of Allergy and Infectious DiseasesSpecial Emphasis Panel; The Multicenter AIDS Cohort Study (MACS).

*Date:* October 29, 2008.

*Time:* 8 a.m. to 6 p.m.

*Agenda:* To review and evaluate grant applications.

*Place:* Hilton Washington/Rockville, 1750 Rockville Pike, Rockville, MD 20852.

*Contact Person:* Eugene R. Baizman, PhD, Scientific Review Officer, Scientific Review Program, Division of Extramural Activities, National Institutes of Health/NIAID, 6700B Rockledge Drive, MSC 7616, Bethesda, MD 20892, 301–402–1464, *eb237e@nih.gov.*

(Catalogue of Federal Domestic Assistance Program Nos. 93.855, Allergy,Immunology, and Transplantation Research; 93.856, Microbiology and InfectiousDiseases Research, National Institutes of Health, HHS)

Dated: September 10, 2008.

**Jennifer Spaeth,**

*Director, Office of Federal Advisory Committee Policy.*

[FR Doc. E8–21630 Filed 9–16–08; 8:45 am]

BILLING CODE 4140–01–M

## DEPARTMENT OF HEALTH AND HUMAN SERVICES

### National Institutes of Health

### National Institute of Biomedical Imaging and Bioengineering; Notice of Closed Meetings

Pursuant to section 10(d) of the Federal Advisory Committee Act, as amended (5 U.S.C. Appendix 2), notice is hereby given of the following meetings.

The meetings will be closed to the public in accordance with the provisions set forth in sections 552b(c)(4) and 552b(c)(6), Title 5 U.S.C., as amended. The grant applications and the discussions could disclose confidential trade secrets or commercial property such as patentable material, and personal information concerning individuals associated with the grant applications, the disclosure of which would constitute a clearly unwarranted invasion of personal privacy.

*Name of Committee:* National Institute of Biomedical Imaging and Bioengineering, Special Emphasis Panel.

*Date:* November 13, 2008.

*Time:* 8 a.m. to 5 p.m.

*Agenda:* To review and evaluate grant applications.

*Place:* Gaithersburg Washingtonian Center, Courtyard by Marriott, 204 Boardwalk Place, Gaithersburg, MD 20878. (Telephone Conference Call)

*Contact Person:* John K. Hayes, PhD, Scientific Review Officer, 6707 Democracy Blvd., Suite 959, Democracy Two, Bethesda, MD 20892, (301) 451–3398, *hayesj@mail.nih.gov.*

*Name of Committee:* National Institute of Biomedical Imaging and Bioengineering, Special Emphasis Panel.

*Date:* November 13–14, 2008.

*Time:* 7 a.m. to 5 p.m.

*Agenda:* To review and evaluate grant applications.

*Place:* Holiday Inn Washington Dulles, Holiday Inn Washington Dulles Int. Airport, 45425 Holiday Drive, Dulles, VA 20166.

*Contact Person:* Ruth Grossman, DDS, Scientific Review Officer, National Institute of Biomedical Imaging and Bioengineering, 6707 Democracy Boulevard, Room 960, Bethesda, MD 20892, 301–496–8775, *grossmanrs@mail.nih.gov.*

Dated: September 10, 2008.

**Jennifer Spaeth,**

*Director, Office of Federal Advisory Committee Policy.*

[FR Doc. E8–21631 Filed 9–16–08; 8:45 am]

**BILLING CODE 4140–01–M**

## DEPARTMENT OF HEALTH AND HUMAN SERVICES

### Office of Refugee Resettlement

### Noncompetitive Successor Award

**AGENCY:** Division of Community Resettlement, Office of Refugee Resettlement, ACF, DHHS.

**ACTION:** Notice of a Noncompetitive Successor Award to Northern Virginia Family Service.

*CFDA#:* 93.604.

*Legislative Authority:* ''Torture Victims Relief Act (TVRA) of 1998,'' Public Law 105–320 (22 U.S.C. 2152 note), reauthorized by Public Law 109–165 in January 2006. Sec. 5(a) of the law provides: Assistance for Treatment of Torture Victims—The Secretary of Health and Human Services may provide grants to programs in the United States to cover the cost of the following services: (1) Services for the rehabilitation of victims of torture, including treatment of the physical and psychological effects of torture. (2) Social and legal services for victims of torture. (3) Research and training for health care providers outside of treatment centers, or programs for the purpose of enabling such providers to provide the services described in paragraph (1).

*Amount of Award:* Remainder of current budget period April 1, 2008 through September 29, 2008. Award $225,896. Final budget period of the originally approved three-year project period September 30, 2008 through September 29, 2009. Annual Amount $415,000.

*Project Period:* April 1, 2008–September 29, 2009.

*Summary:* In FY 2006, ORR awarded a competitive Services for Survivors of Torture grant to the Center for Multicultural Human Services (CMHS) in Falls Church, Virginia. The original project period was from September 30, 2006 through September 29, 2009. CMHS served as fiscal sponsor and legal entity of the approved project. As of March 31, 2008, CMHS ceased operations. CMHS has requested permission for Northern Virginia Family Service to assume the grant. Northern Virginia has agreed to this request. The effect of this deviation request is to transfer the grant from the initial grantee to a new grantee with the scope and operations of the grant remaining unchanged.

**FOR FURTHER INFORMATION CONTACT:** Ronald Munia, Director, Division of Community Resettlement, Office of Refugee Resettlement, 370 L'Enfant Promenade, SW., Washington, DC 20447. Telephone: 202–401–4559. E-mail: *Ronald.Munia@acf.hhs.gov.*

Dated: September 9, 2008.

**Pamela Green-Smith,**

*Director, Division of Refugee Assistance, Office of Refugee Resettlement.*

[FR Doc. E8–21614 Filed 9–16–08; 8:45 am]

**BILLING CODE 4184–01–P**

## DEPARTMENT OF HOMELAND SECURITY

### Federal Emergency Management Agency

### Agency Information Collection Activities: Proposed Collection; Comment Request

**AGENCY:** Federal Emergency Management Agency, DHS.

**ACTION:** Notice; 60-day notice and request for comments; Revision of a currently approved collection, OMB Number 1660–0008, FEMA Form 81–31, FEMA Form 81–65.

**SUMMARY:** The Federal Emergency Management Agency, as part of its continuing effort to reduce paperwork and respondent burden, invites the general public and other Federal agencies to take this opportunity to comment on a revised information collection. In accordance with the Paperwork Reduction Act of 1995, this notice seeks comments concerning Elevation Certificate and the Floodproofing Certificate.

**SUPPLEMENTARY INFORMATION:** The National Flood Insurance Program (NFIP) requires the elevation or floodproofing of new or substantially improved structures in designated Special Flood Hazard Areas. As part of the agreement for making flood insurance available in a community, the NFIP requires the community to adopt a floodplain management ordinance that meets or exceeds the minimum requirements of the NFIP. Title 44 CFR parts 61.7 and 61.8 require proper investigation to estimate the risk premium rates necessary to provide flood insurance.

### Collection of Information

*Title:* Post Construction Elevation Certificate/Floodproofing Certificate.

*Type of Information Collection:* Revision of a currently approved collection.

*OMB Number:* 1660–0008.

*Form Numbers:* FEMA Form 81–31, Elevation Certificate, FEMA Form 81–65, Floodproofing Certificate.

*Abstract:* The Elevation Certificate and Floodproofing Certificate are used in conjunction with the application for flood insurance. The certificates are required for proper rating of post Flood Insurance Rate Map (FIRM) structures, which are buildings constructed after the publication of the FIRM, for flood insurance in Special Flood Hazard Areas. In addition, the Elevation Certificate is needed for pre-FIRM structures being rated under post-FIRM flood insurance rules. The certificates provide community officials and others standardized documents to readily record needed building elevation information. NFIP policyholders/applicants provide the appropriate certificate to insurance agents. The certificate is then used in conjunction with the insurance application so that the building can be properly rated for flood insurance.

*Affected Public:* Individuals and households, Business or other for-profit, State, local or Tribal Government.

*Estimated Total Annual Burden Hours:* 8,245 hours.

TABLE A.12—ESTIMATED ANNUALIZED BURDEN HOURS AND COSTS

| Type of respondent | Form name/form number | Number of respondents | Number of responses per respondent | Avg. burden per response (in hours) | Total annual burden (in hours) | Avg. hourly wage rate | Total annual respondent cost |
|---|---|---|---|---|---|---|---|
| Individuals or households. | Elevation Certificate FEMA 81–31 and Instructions (including Web-based training module). | 2,190 | 1 | 3.75 | 8,212.5 | $19.56 | $160,636.50 |
| Business or other for profit (surveyors). | Floodproofing Certificate FEMA 81–65. | 10 | 1 | 3.25 | 32.5 | 33.11 | 1,076.08 |
| Total ..... | ..... | 2,200 | ..... | ..... | 8,245 | ..... | 161,712.58 |

*Estimated Cost:* The estimated annualized cost to respondents based on wage rate categories is $161,712.58. The estimated cost to respondents for purchasing professional services required to complete the certificates is $770,000. The estimated annual cost to the Federal Government is $21,080.00.

*Comments:* Written comments are solicited to (a) evaluate whether the proposed data collection is necessary for the proper performance of the agency, including whether the information shall have practical utility; (b) evaluate the accuracy of the agency's estimate of the burden of the proposed collection of information, including the validity of the methodology and assumptions used; (c) enhance the quality, utility, and clarity of the information to be collected; and (d) minimize the burden of the collection of information on those who are to respond, including through the use of appropriate automated, electronic, mechanical, or other technological collection techniques or other forms of information technology, *e.g.*, permitting electronic submission of responses. Comments must be submitted on or before November 17, 2008.

**ADDRESSES:** Interested persons should submit written comments to Office of Management, Records Management Division, Federal Emergency Management Agency, 500 C Street, SW., Washington, DC 20472, Mail Drop Room 301.

**FOR FURTHER INFORMATION CONTACT:** Contact Mary Ann Chang, Insurance Examiner, Mitigation Division, (703) 605–0421 for additional information. You may contact the Records Management Branch for copies of the proposed collection of information at facsimile number (202) 646–3347 or e-mail address: *FEMA-Information-Collections@dhs.gov.*

Dated: September 11, 2008.

**John A. Sharetts-Sullivan,**

*Director, Records Management Division, Office of Management, Federal Emergency Management Agency, Department of Homeland Security.*

[FR Doc. E8–21748 Filed 9–16–08; 8:45 am]

BILLING CODE 9110–11–P

## DEPARTMENT OF HOMELAND SECURITY

### Federal Emergency Management Agency

### Agency Information Collection Activities: Proposed Collection; Comment Request

**AGENCY:** Federal Emergency Management Agency, DHS.

**ACTION:** Notice; 60-day notice and request for comments; Extension, without change, of a currently approved collection, OMB Number 1660–0014, FEMA Form—None.

**SUMMARY:** The Federal Emergency Management Agency, as part of its continuing effort to reduce paperwork and respondent burden, invites the general public and other Federal agencies to take this opportunity to comment on a continuing information collection. In accordance with the Paperwork Reduction Act of 1995, this notice seeks comments concerning reimbursement of claims submitted for fighting fires on Federal property.

**SUPPLEMENTARY INFORMATION:** The collection of information is necessary in order to reimburse fire services for claims submitted for fighting fires on property that is under jurisdiction of the United States. Section II of the Federal Fire Prevention and Control Act of 1974, implemented under 44 CFR part 151, provides that each fire service that engages in the fighting of a fire on property which is under the jurisdiction of the United States and who has a mutual aid agreement in effect between claimant and the Federal Emergency Management Agency (FEMA) for the property upon which the fire occurred, may file a claim with FEMA for the amount of direct expense and direct losses incurred by such fire services as a result of fighting fires.

### Collection of Information

*Title:* Reimbursement for Cost of Fighting Fire on Federal Property.

*Type of Information Collection:* Extension, without change, of a currently approved collection.

*OMB Number:* 1660–0014.

*Form Numbers:* FEMA Form—None.

*Abstract:* The Federal Emergency Management Agency (FEMA), the Administrator of the United States Fire Administration (USFA); and the United

States Treasury will use the information to ensure proper expenditure of Federal funds. Once a claim is received, a copy of FEMA determination and the claim is forwarded to the Treasury Department. The Treasury Department will pay for fire services or its parent jurisdiction for any moneys in the treasurer subject to reimbursement, to the Federal department or agency under whose jurisdiction the fire occurred.

*Affected Public:* Federal Government, and State, Local or Tribal Government.

*Estimated Total Annual Burden Hours:*

ANNUAL HOUR BURDEN

| Data collection activity/instrument | No. of respondents | Frequency of responses | Hour burden per response | Annual responses | Total annual burden hours |
|---|---|---|---|---|---|
| | (A) | (B) | (C) | (D) = (A × B) | (C × D) |
| Claims Information | 4 | 4 | 1.5 | 16 | 24 |
| Total | 4 | 4 | 1.5 | 16 | 24 |

*Estimated Cost:* The annualized cost burden for Fire Chiefs to complete and process a claim is estimated to be $15,360 annually. The estimated annual cost to the Federal Government is $654.00.

*Comments:* Written comments are solicited to (a) evaluate whether the proposed data collection is necessary for the proper performance of the agency, including whether the information shall have practical utility; (b) evaluate the accuracy of the agency's estimate of the burden of the proposed collection of information, including the validity of the methodology and assumptions used; (c) enhance the quality, utility, and clarity of the information to be collected; and (d) minimize the burden of the collection of information on those who are to respond, including through the use of appropriate automated, electronic, mechanical, or other technological collection techniques or other forms of information technology, *e.g.*, permitting electronic submission of responses. Comments must be submitted on or before November 17, 2008.

**ADDRESSES:** Interested persons should submit written comments to Office of Management, Records Management Division, Federal Emergency Management Agency, 500 C Street, SW., Washington, DC 20472, Mail Drop Room 301.

**FOR FURTHER INFORMATION CONTACT:** Contact Tim Ganley, Fire Program Specialist, U.S. Fire Administration, (301) 447–1358 for additional information. You may contact the Records Management Branch for copies of the proposed collection of information at facsimile number (202) 646–3347 or e-mail address: *FEMA-Information-Collections@dhs.gov.*

Dated: September 11, 2008.

**John A. Sharetts-Sullivan,**

*Director, Records Management Division, Office of Management, Federal Emergency Management Agency, Department of Homeland Security.*

[FR Doc. E8–21769 Filed 9–16–08; 8:45 am]

**BILLING CODE 9110–17–P**

## DEPARTMENT OF HOMELAND SECURITY

### Federal Emergency Management Agency

### Agency Information Collection Activities: Proposed Collection; Comment Request

**ACTION:** Notice; 30-day notice and request for comments; Reinstatement, with change, of a previously approved collection for which approval has expired, 1660–0054; FEMA Form 080–2, FEMA Form 080–3, FEMA Form 080–4, FEMA Form 080–5, FEMA Form 080–6, FEMA Form 080–7, FEMA Form 080–8, FEMA Form 080–10, and FEMA Form 080–12.

**SUMMARY:** The Federal Emergency Management Agency (FEMA) is submitting a request for review and approval of a collection of information under the emergency processing procedures in Office of Management and Budget (OMB) regulation 5 CFR 1320.13. FEMA is requesting that this information collection be approved by 12/01/2008. The approval will authorize FEMA to use the collection through 6/01/2009. FEMA plans to follow this emergency request with a request for a 3-year approval. The request will be processed under OMB's normal clearance procedures. To help us with the timely processing of the emergency and normal clearance submissions to OMB, FEMA invites the general public to comment on the proposed collection of information.

**SUPPLEMENTARY INFORMATION:** The authority for Assistance to Firefighters Grant Program (AFG) and Fire Prevention and Safety (FPS) is derived from the Federal Fire Protection and Control Act of 1974 (15 U.S.C. 2229 *et seq.*), as amended. The authority for Staffing for Adequate Fire and Emergency Response (SAFER) is derived from 15 U.S.C. 2201 *et seq.* This submission is necessary in order for DHS to effectively implement a competitive grant program and meet the fiscal deadlines.

*Collection of Information:*

*Title:* Assistance to Firefighters Grant Applications.

*Type of Information Collection:* Reinstatement, with change, of a previously approved collection for which approval has expired.

*OMB Number:* 1660–0054.

*Abstract:* Information sought under this submission will comprise the grant applications for AFG, FPS and SAFER. The information is necessary to assess the needs of the applicants as well as the benefits to be obtained from the use of funds.

*Affected Public:* Not-for-profit, State, Local and Tribal governments.

*Number of Respondents:* 64,050.

*Estimated Time per Respondent:* 3.03 hours.

*Estimated Total Annual Burden Hours:* 193,995 hours.

*Estimated Cost:* The estimated annual cost to the Federal Government is $6,127,441.

*Frequency of Response:* On occasion.

*Comments:* Written comments are solicited to (a) evaluate whether the reinstated data collection is necessary for the proper performance of the agency, including whether the information shall have practical utility; (b) evaluate the accuracy of the agency's estimate of the burden of the proposed information collection, including the validity of the methodology and assumptions used; (c) enhance the

quality, utility, and clarity of the information to be collected; and (d) minimize the burden of the collection of information on those who are to respond, including through the use of appropriate automated, electronic, mechanical, or other technology, e.g., permitting electronic submission of responses. Submit comments to OMB within 30 days of the date of this notice. To ensure that FEMA is fully aware of any comments or concerns that you share with OMB, please provide us with a copy of your comments. FEMA will continue to accept comments from interested persons through November 17, 2008. Submit comments to the FEMA address listed in the **FOR FURTHER INFORMATION CONTACT** caption.

Interested persons are invited to submit written comments on the proposed information collection to the Office of Information and Regulatory Affairs, Attn: Desk Officer for the Department of Homeland Security, Federal Emergency Management Agency, Reinstatement, with change, of a previously approved collection for which approval has expired—Assistance to Firefighters Grant Applications, facsimile number (202) 395–6974.

**FOR FURTHER INFORMATION CONTACT:** Requests for additional information or copies of the information collection should be made to Director, Records Management Division, Office of Management, Federal Emergency Management Agency, 500 C Street, SW., Washington, DC 20472, Mail Drop Room 301, facsimile number (202) 646–3347, or at e-mail address *FEMA-Information-Collections@dhs.gov*.

Dated: September 11, 2008.

**John A. Sharetts-Sullivan,**

*Director, Records Management Division, Office of Management, Federal Emergency Management Agency, Department of Homeland Security.*

[FR Doc. E8–21770 Filed 9–16–08; 8:45 am]

**BILLING CODE 4410–10–P**

## DEPARTMENT OF HOMELAND SECURITY

### Federal Emergency Management Agency

**[FEMA–3292–EM]**

### Alabama; Emergency and Related Determinations

**AGENCY:** Federal Emergency Management Agency, DHS.

**ACTION:** Notice.

**SUMMARY:** This is a notice of the Presidential declaration of an emergency for the State of Alabama (FEMA–3292–EM), dated August 30, 2008, and related determinations.

**DATES:** *Effective Date:* August 30, 2008.

**FOR FURTHER INFORMATION CONTACT:** Peggy Miller, Disaster Assistance Directorate, Federal Emergency Management Agency, 500 C Street, SW., Washington, DC 20472, (202) 646–2705.

**SUPPLEMENTARY INFORMATION:** Notice is hereby given that, in a letter dated August 30, 2008, the President declared an emergency declaration under the authority of the Robert T. Stafford Disaster Relief and Emergency Assistance Act, 42 U.S.C. 5121–5207 (the Stafford Act), as follows:

I have determined that the emergency conditions in the State of Alabama resulting from Hurricane Gustav beginning on August 29, 2008, and continuing, are of sufficient severity and magnitude to warrant an emergency declaration under the Robert T. Stafford Disaster Relief and Emergency Assistance Act, 42 U.S.C. 5121–5206 (the Stafford Act). Therefore, I declare that such an emergency exists in the State of Alabama.

You are authorized to provide appropriate assistance for required emergency measures, authorized under Title V of the Stafford Act, to save lives, protect property and public health and safety, or to lessen or avert the threat of a catastrophe in the designated areas. Specifically, you are authorized to provide assistance for emergency protective measures (Category B), including direct Federal assistance, under the Public Assistance program. This assistance excludes regular time costs for subgrantees' regular employees. In addition, you are authorized to provide such other forms of assistance under Title V of the Stafford Act as you may deem appropriate.

Consistent with the requirement that Federal assistance be supplemental, any Federal funds provided under the Stafford Act for Public Assistance will be limited to 75 percent of the total eligible costs. In order to provide Federal assistance, you are hereby authorized to allocate from funds available for these purposes such amounts as you find necessary for Federal emergency assistance and administrative expenses.

Further, you are authorized to make changes to this declaration to the extent allowable under the Stafford Act.

The Federal Emergency Management Agency (FEMA) hereby gives notice that pursuant to the authority vested in the Administrator, Department of Homeland Security, under Executive Order 12148, as amended, W. Michael Moore, of FEMA is appointed to act as the Federal Coordinating Officer for this declared emergency.

The following areas of the State of Alabama have been designated as adversely affected by this declared emergency:

All 67 counties in the State of Alabama for emergency protective measures (Category B), including direct Federal assistance, under the Public Assistance program.

(The following Catalog of Federal Domestic Assistance Numbers (CFDA) are to be used for reporting and drawing funds: 97.030, Community Disaster Loans; 97.031, Cora Brown Fund; 97.032, Crisis Counseling; 97.033, Disaster Legal Services; 97.034, Disaster Unemployment Assistance (DUA); 97.046, Fire Management Assistance Grant; 97.048, Disaster Housing Assistance to Individuals and Households In Presidentially Declared Disaster Areas; 97.049, Presidentially Declared Disaster Assistance—Disaster Housing Operations for Individuals and Households; 97.050 Presidentially Declared Disaster Assistance to Individuals and Households—Other Needs; 97.036, Disaster Grants—Public Assistance (Presidentially Declared Disasters); 97.039, Hazard Mitigation Grant.)

**R. David Paulison,**

*Administrator, Federal Emergency Management Agency.*

[FR Doc. E8–21670 Filed 9–16–08; 8:45 am]

**BILLING CODE 9110–10–P**

## DEPARTMENT OF HOMELAND SECURITY

### Federal Emergency Management Agency

**[FEMA–3293–EM]**

### Florida; Emergency and Related Determinations

**AGENCY:** Federal Emergency Management Agency, DHS.

**ACTION:** Notice.

**SUMMARY:** This is a notice of the Presidential declaration of an emergency for the State of Florida (FEMA–3293–EM), dated September 7, 2008, and related determinations.

**DATES:** *Effective Date:* September 7, 2008.

**FOR FURTHER INFORMATION CONTACT:** Peggy Miller, Disaster Assistance Directorate, Federal Emergency Management Agency, 500 C Street, SW., Washington, DC 20472, (202) 646–2705.

**SUPPLEMENTARY INFORMATION:** Notice is hereby given that, in a letter dated September 7, 2008, the President declared an emergency under the authority of the Robert T. Stafford Disaster Relief and Emergency Assistance Act, 42 U.S.C. 5121–5207 (the Stafford Act), as follows:

I have determined that the emergency conditions in the State of Florida resulting from Hurricane Ike beginning on September 5, 2008, and continuing, are of sufficient severity and magnitude to warrant an emergency declaration under the Robert T. Stafford Disaster Relief and Emergency Assistance Act, 42 U.S.C. 5121–5206 (the

Stafford Act). Therefore, I declare that such an emergency exists in the State of Florida.

You are authorized to provide appropriate assistance for required emergency measures, authorized under Title V of the Stafford Act, to save lives, protect property and public health and safety, or to lessen or avert the threat of a catastrophe in the designated areas. Specifically, you are authorized to provide assistance for emergency protective measures (Category B), including direct Federal assistance, under the Public Assistance program. This assistance excludes regular time costs for subgrantees' regular employees. In addition, you are authorized to provide such other forms of assistance under Title V of the Stafford Act, as you may deem appropriate.

Consistent with the requirement that Federal assistance be supplemental, any Federal funds provided under the Stafford Act for Public Assistance will be limited to 75 percent of the total eligible costs. In order to provide Federal assistance, you are hereby authorized to allocate from funds available for these purposes such amounts as you find necessary for Federal emergency assistance and administrative expenses.

Further, you are authorized to make changes to this declaration to the extent allowable under the Stafford Act.

The Federal Emergency Management Agency (FEMA) hereby gives notice that pursuant to the authority vested in the Administrator, Department of Homeland Security, under Executive Order 12148, as amended, Thomas P. Davies, of FEMA is appointed to act as the Federal Coordinating Officer for this declared emergency.

The following areas of the State of Florida have been designated as adversely affected by this declared emergency:

Monroe County for emergency protective measures (Category B), including direct Federal assistance, under the Public Assistance program.

(The following Catalog of Federal Domestic Assistance Numbers (CFDA) are to be used for reporting and drawing funds: 97.030, Community Disaster Loans; 97.031, Cora Brown Fund; 97.032, Crisis Counseling; 97.033, Disaster Legal Services; 97.034, Disaster Unemployment Assistance (DUA); 97.046, Fire Management Assistance Grant; 97.048, Disaster Housing Assistance to Individuals and Households In Presidentially Declared Disaster Areas; 97.049, Presidentially Declared Disaster Assistance—Disaster Housing Operations for Individuals and Households; 97.050 Presidentially Declared Disaster Assistance to Individuals and Households—Other Needs, 97.036, Disaster Grants—Public Assistance (Presidentially Declared Disasters); 97.039, Hazard Mitigation Grant.)

**R. David Paulison,**

*Administrator, Federal Emergency Management Agency.*

[FR Doc. E8–21662 Filed 9–16–08; 8:45 am]

**BILLING CODE 9110–10–P**

## DEPARTMENT OF HOMELAND SECURITY

### Federal Emergency Management Agency

**[FEMA–3289–EM]**

### Louisiana; Emergency and Related Determinations

**AGENCY:** Federal Emergency Management Agency, DHS.

**ACTION:** Notice.

**SUMMARY:** This is a notice of the Presidential declaration of an emergency for the State of Louisiana (FEMA–3289–EM), dated August 29, 2008, and related determinations.

**DATES:** *Effective Date:* August 29, 2008.

**FOR FURTHER INFORMATION CONTACT:** Peggy Miller, Disaster Assistance Directorate, Federal Emergency Management Agency, 500 C Street, SW., Washington, DC 20472, (202) 646–2705.

**SUPPLEMENTARY INFORMATION:** Notice is hereby given that, in a letter dated August 29, 2008, the President declared an emergency declaration under the authority of the Robert T. Stafford Disaster Relief and Emergency Assistance Act, 42 U.S.C. 5121–5207 (the Stafford Act), as follows:

I have determined that the emergency conditions in the State of Louisiana resulting from Hurricane Gustav beginning on August 27, 2008, and continuing, are of sufficient severity and magnitude to warrant an emergency declaration under the Robert T. Stafford Disaster Relief and Emergency Assistance Act, 42 U.S.C. 5121–5206 (the Stafford Act). Therefore, I declare that such an emergency exists in the State of Louisiana.

You are authorized to provide appropriate assistance for required emergency measures, authorized under Title V of the Stafford Act, to save lives, protect property and public health and safety, or to lessen or avert the threat of a catastrophe in the designated areas. Specifically, you are authorized to provide assistance for emergency protective measures (Category B), including direct Federal assistance, under the Public Assistance program. This assistance excludes regular time costs for subgrantees' regular employees. In addition, you are authorized to provide such other forms of assistance under Title V of the Stafford Act as you may deem appropriate.

Consistent with the requirement that Federal assistance be supplemental, any Federal funds provided under the Stafford Act for Public Assistance will be limited to 75 percent of the total eligible costs. In order to provide Federal assistance, you are hereby authorized to allocate from funds available for these purposes such amounts as you find necessary for Federal emergency assistance and administrative expenses.

Further, you are authorized to make changes to this declaration to the extent allowable under the Stafford Act.

The Federal Emergency Management Agency (FEMA) hereby gives notice that pursuant to the authority vested in the Administrator, Department of Homeland Security, under Executive Order 12148, as amended, Michael J. Hall, of FEMA is appointed to act as the Federal Coordinating Officer for this declared emergency.

The following areas of the State of Louisiana have been designated as adversely affected by this declared emergency:

All 64 parishes in the State of Louisiana for emergency protective measures (Category B), including direct Federal assistance, under the Public Assistance program.

(The following Catalog of Federal Domestic Assistance Numbers (CFDA) are to be used for reporting and drawing funds: 97.030, Community Disaster Loans; 97.031, Cora Brown Fund; 97.032, Crisis Counseling; 97.033, Disaster Legal Services; 97.034, Disaster Unemployment Assistance (DUA); 97.046, Fire Management Assistance Grant; 97.048, Disaster Housing Assistance to Individuals and Households In Presidentially Declared Disaster Areas; 97.049, Presidentially Declared Disaster Assistance—Disaster Housing Operations for Individuals and Households; 97.050, Presidentially Declared Disaster Assistance to Individuals and Households—Other Needs, 97.036, Disaster Grants—Public Assistance (Presidentially Declared Disasters); 97.039, Hazard Mitigation Grant.)

**R. David Paulison,**

*Administrator, Federal Emergency Management Agency.*

[FR Doc. E8–21682 Filed 9–16–08; 8:45 am]

**BILLING CODE 9110–10–P**

## DEPARTMENT OF HOMELAND SECURITY

### Federal Emergency Management Agency

**[FEMA–3291–EM]**

### Mississippi; Emergency and Related Determinations

**AGENCY:** Federal Emergency Management Agency, DHS.

**ACTION:** Notice.

**SUMMARY:** This is a notice of the Presidential declaration of an emergency for the State of Mississippi (FEMA–3291–EM), dated August 30, 2008, and related determinations.

**DATES:** *Effective Date:* August 30, 2008.

**FOR FURTHER INFORMATION CONTACT:** Peggy Miller, Disaster Assistance Directorate, Federal Emergency Management Agency, 500 C Street, SW., Washington, DC 20472, (202) 646–2705.

**SUPPLEMENTARY INFORMATION:** Notice is hereby given that, in a letter dated

August 30, 2008, the President declared an emergency declaration under the authority of the Robert T. Stafford Disaster Relief and Emergency Assistance Act, 42 U.S.C. 5121–5207 (the Stafford Act), as follows:

I have determined that the emergency conditions in the State of Mississippi resulting from Hurricane Gustav beginning on August 28, 2008, and continuing, are of sufficient severity and magnitude to warrant an emergency declaration under the Robert T. Stafford Disaster Relief and Emergency Assistance Act, 42 U.S.C. 5121–5206 (the Stafford Act). Therefore, I declare that such an emergency exists in the State of Mississippi.

You are authorized to provide appropriate assistance for required emergency measures, authorized under Title V of the Stafford Act, to save lives, protect property and public health and safety, or to lessen or avert the threat of a catastrophe in the designated areas. Specifically, you are authorized to provide assistance for emergency protective measures (Category B), including direct Federal assistance, under the Public Assistance program. This assistance excludes regular time costs for subgrantees' regular employees. In addition, you are authorized to provide such other forms of assistance under Title V of the Stafford Act as you may deem appropriate.

Consistent with the requirement that Federal assistance be supplemental, any Federal funds provided under the Stafford Act for Public Assistance will be limited to 75 percent of the total eligible costs. In order to provide Federal assistance, you are hereby authorized to allocate from funds available for these purposes such amounts as you find necessary for Federal emergency assistance and administrative expenses.

Further, you are authorized to make changes to this declaration to the extent allowable under the Stafford Act.

The Federal Emergency Management Agency (FEMA) hereby gives notice that pursuant to the authority vested in the Administrator, Department of Homeland Security, under Executive Order 12148, as amended, Michael L. Parker, of FEMA is appointed to act as the Federal Coordinating Officer for this declared emergency.

The following areas of the State of Mississippi have been designated as adversely affected by this declared emergency:

All 82 counties in the State of Mississippi for emergency protective measures (Category B), including direct Federal assistance, under the Public Assistance program.

(The following Catalog of Federal Domestic Assistance Numbers (CFDA) are to be used for reporting and drawing funds: 97.030, Community Disaster Loans; 97.031, Cora Brown Fund; 97.032, Crisis Counseling; 97.033, Disaster Legal Services; 97.034, Disaster Unemployment Assistance (DUA); 97.046, Fire Management Assistance Grant; 97.048, Disaster Housing Assistance to Individuals and Households In Presidentially Declared Disaster Areas; 97.049, Presidentially Declared Disaster Assistance—Disaster Housing Operations for Individuals and Households; 97.050 Presidentially Declared Disaster Assistance to Individuals and Households—Other Needs; 97.036, Disaster Grants—Public Assistance (Presidentially Declared Disasters); 97.039, Hazard Mitigation Grant.)

**R. David Paulison,**

*Administrator, Federal Emergency Management Agency.*

[FR Doc. E8–21671 Filed 9–16–08; 8:45 am]

BILLING CODE 9110–10–P

## DEPARTMENT OF HOMELAND SECURITY

### Federal Emergency Management Agency

**[FEMA–3290–EM]**

### Texas; Emergency and Related Determinations

**AGENCY:** Federal Emergency Management Agency, DHS.

**ACTION:** Notice.

**SUMMARY:** This is a notice of the Presidential declaration of an emergency for the State of Texas (FEMA–3290–EM), dated August 29, 2008, and related determinations.

**DATES:** *Effective Date:* August 29, 2008.

**FOR FURTHER INFORMATION CONTACT:** Peggy Miller, Disaster Assistance Directorate, Federal Emergency Management Agency, 500 C Street, SW., Washington, DC 20472, (202) 646–2705.

**SUPPLEMENTARY INFORMATION:** Notice is hereby given that, in a letter dated August 29, 2008, the President declared an emergency declaration under the authority of the Robert T. Stafford Disaster Relief and Emergency Assistance Act, 42 U.S.C. 5121–5207 (the Stafford Act), as follows:

I have determined that the emergency conditions in certain areas of the State of Texas resulting from Hurricane Gustav beginning on August 27, 2008, and continuing, are of sufficient severity and magnitude to warrant an emergency declaration under the Robert T. Stafford Disaster Relief and Emergency Assistance Act, 42 U.S.C. 5121–5207 (the Stafford Act). Therefore, I declare that such an emergency exists in the State of Texas.

You are authorized to provide appropriate assistance for required emergency measures, authorized under Title V of the Stafford Act, to save lives and to protect property and public health and safety, and to lessen or avert the threat of a catastrophe in the designated areas. Specifically, you are authorized to provide assistance for emergency protective measures (Category B), including direct Federal assistance, under the Public Assistance program. This assistance excludes regular time costs for subgrantees' regular employees. In addition, you are authorized to provide such other forms of assistance under Title V of the Stafford Act as you may deem appropriate.

Consistent with the requirement that Federal assistance be supplemental, any Federal funds provided under the Stafford Act for Public Assistance will be limited to 75 percent of the total eligible costs. In order to provide Federal assistance, you are hereby authorized to allocate from funds available for these purposes such amounts as you find necessary for Federal emergency assistance and administrative expenses.

Further, you are authorized to make changes to this declaration to the extent allowable under the Stafford Act.

The Federal Emergency Management Agency (FEMA) hereby gives notice that pursuant to the authority vested in the Administrator, Department of Homeland Security, under Executive Order 12148, as amended, Sandy Coachman, of FEMA, is appointed to act as the Federal Coordinating Officer for this declared emergency.

The following areas of the State of Texas have been designated as adversely affected by this declared emergency:

Angelina, Aransas, Austin, Bee, Bexar, Bowie, Brazoria, Brazos, Brooks, Calhoun, Cameron, Chambers, Collin, Colorado, Dallas, Denton, DeWitt, El Paso, Fort Bend, Galveston, Goliad, Hardin, Harris, Hidalgo, Jackson, Jasper, Jefferson, Jim Hogg, Jim Wells, Kenedy, Kleberg, Lavaca, Liberty, Lubbock, Matagorda, Montgomery, Nacogdoches, Navarro, Newton, Nueces, Orange, Polk, Potter, Refugio, Sabine, San Jacinto, San Patricio, Shelby, Smith, Starr, Tarrant, Tom Green, Travis, Trinity, Tyler, Victoria, Waller, Walker, Webb, Wharton, and Willacy for emergency protective measures (Category B), including direct Federal assistance, under the Public Assistance program.

(The following Catalog of Federal Domestic Assistance Numbers (CFDA) are to be used for reporting and drawing funds: 97.030, Community Disaster Loans; 97.031, Cora Brown Fund; 97.032, Crisis Counseling; 97.033, Disaster Legal Services; 97.034, Disaster Unemployment Assistance (DUA); 97.046, Fire Management Assistance Grant; 97.048, Disaster Housing Assistance to Individuals and Households in Presidentially Declared Disaster Areas; 97.049, Presidentially Declared Disaster Assistance—Disaster Housing Operations for Individuals and Households; 97.050, Presidentially Declared Disaster Assistance to Individuals and Households—Other Needs, 97.036, Disaster Grants—Public Assistance (Presidentially Declared Disasters); 97.039, Hazard Mitigation Grant.)

**R. David Paulison,**

*Administrator,Federal Emergency Management Agency.*

[FR Doc. E8–21673 Filed 9–16–08; 8:45 am]

BILLING CODE 9110–10–P

## DEPARTMENT OF HOMELAND SECURITY

### Federal Emergency Management Agency

**[FEMA–3294–EM]**

### Texas; Emergency and Related Determinations

**AGENCY:** Federal Emergency Management Agency, DHS.

**ACTION:** Notice.

**SUMMARY:** This is a notice of the Presidential declaration of an emergency for the State of Texas (FEMA–3294–EM), dated September 10, 2008, and related determinations.

**DATES:** *Effective Date:* September 10, 2008.

**FOR FURTHER INFORMATION CONTACT:** Peggy Miller, Disaster Assistance Directorate, Federal Emergency Management Agency, 500 C Street, SW., Washington, DC 20472, (202) 646–2705.

**SUPPLEMENTARY INFORMATION:** Notice is hereby given that, in a letter dated September 10, 2008, the President declared an emergency declaration under the authority of the Robert T. Stafford Disaster Relief and Emergency Assistance Act, 42 U.S.C. 5121–5207 (the Stafford Act), as follows:

I have determined that the emergency conditions in certain areas of the State of Texas resulting from Hurricane Ike beginning on September 7, 2008, and continuing, are of sufficient severity and magnitude to warrant an emergency declaration under the Robert T. Stafford Disaster Relief and Emergency Assistance Act, 42 U.S.C. 5121–5207 (the Stafford Act). Therefore, I declare that such an emergency exists in the State of Texas.

You are authorized to provide appropriate assistance for required emergency measures, authorized under Title V of the Stafford Act, to save lives and to protect property and public health and safety, and to lessen or avert the threat of a catastrophe in the designated areas. Specifically, you are authorized to provide assistance for emergency protective measures (Category B), including direct Federal assistance, under the Public Assistance program. This assistance excludes regular time costs for subgrantees' regular employees. In addition, you are authorized to provide such other forms of assistance under Title V of the Stafford Act, as you may deem appropriate.

Consistent with the requirement that Federal assistance be supplemental, any Federal funds provided under the Stafford Act for Public Assistance will be limited to 75 percent of the total eligible costs. In order to provide Federal assistance, you are hereby authorized to allocate from funds available for these purposes such amounts as you find necessary for Federal emergency assistance and administrative expenses.

Further, you are authorized to make changes to this declaration to the extent allowable under the Stafford Act.

The Federal Emergency Management Agency (FEMA) hereby gives notice that pursuant to the authority vested in the Administrator, Department of Homeland Security, under Executive Order 12148, as amended, Sandy Coachman, of FEMA is appointed to act as the Federal Coordinating Officer for this declared emergency.

The following areas of the State of Texas have been designated as adversely affected by this declared emergency:

Aransas, Brazoria, Brooks, Calhoun, Cameron, Chambers, Fort Bend, Galveston, Hardin, Harris, Hidalgo, Jackson, Jefferson, Jim Wells, Kenedy, Kleberg, Liberty, Matagorda, Nueces, Orange, Refugio, San Patricio, Victoria, Wharton and Willacy Counties for emergency protective measures (Category B), including direct Federal assistance, under the Public Assistance program.

(The following Catalog of Federal Domestic Assistance Numbers (CFDA) are to be used for reporting and drawing funds: 97.030, Community Disaster Loans; 97.031, Cora Brown Fund; 97.032, Crisis Counseling; 97.033, Disaster Legal Services; 97.034, Disaster Unemployment Assistance (DUA); 97.046, Fire Management Assistance Grant; 97.048, Disaster Housing Assistance to Individuals and Households In Presidentially Declared Disaster Areas; 97.049, Presidentially Declared Disaster Assistance—Disaster Housing Operations for Individuals and Households; 97.050 Presidentially Declared Disaster Assistance to Individuals and Households—Other Needs; 97.036, Disaster Grants—Public Assistance (Presidentially Declared Disasters); 97.039, Hazard Mitigation Grant.)

**R. David Paulison,**

*Administrator, Federal Emergency Management Agency.*

[FR Doc. E8–21775 Filed 9–16–08; 8:45 am]

**BILLING CODE 9110–10–P**

## DEPARTMENT OF HOMELAND SECURITY

### Federal Emergency Management Agency

**[FEMA–3292–EM]**

### Alabama; Amendment No. 1 to Notice of an Emergency Declaration

**AGENCY:** Federal Emergency Management Agency, DHS.

**ACTION:** Notice.

**SUMMARY:** This notice amends the notice of an emergency for the State of Alabama (FEMA–3292–EM), dated August 30, 2008, and related determinations.

**DATES:** *Effective Date:* September 3, 2008.

**FOR FURTHER INFORMATION CONTACT:** Peggy Miller, Disaster Assistance Directorate, Federal Emergency Management Agency, 500 C Street, SW., Washington, DC 20472, (202) 646–3886.

**SUPPLEMENTARY INFORMATION:** Notice is hereby given that the incident period for this emergency is closed effective September 3, 2008.

(The following Catalog of Federal Domestic Assistance Numbers (CFDA) are to be used for reporting and drawing funds: 97.030, Community Disaster Loans; 97.031, Cora Brown Fund; 97.032, Crisis Counseling; 97.033, Disaster Legal Services; 97.034, Disaster Unemployment Assistance (DUA); 97.046, Fire Management Assistance Grant; 97.048, Disaster Housing Assistance to Individuals and Households In Presidentially Declared Disaster Areas; 97.049, Presidentially Declared Disaster Assistance—Disaster Housing Operations for Individuals and Households; 97.050, Presidentially Declared Disaster Assistance to Individuals and Households—Other Needs; 97.036, Disaster Grants—Public Assistance (Presidentially Declared Disasters); 97.039, Hazard Mitigation Grant.)

**R. David Paulison,**

*Administrator, Federal Emergency Management Agency.*

[FR Doc. E8–21772 Filed 9–16–08; 8:45 am]

**BILLING CODE 9110–10–P**

## DEPARTMENT OF HOMELAND SECURITY

### Federal Emergency Management Agency

**[FEMA–3294–EM]**

### Texas; Amendment No. 1 to Notice of an Emergency Declaration

**AGENCY:** Federal Emergency Management Agency, DHS.

**ACTION:** Notice.

**SUMMARY:** This notice amends the notice of an emergency declaration for the State of Texas (FEMA–3294–EM), dated September 10, 2008, and related determinations.

**DATES:** *Effective Date:* September 11, 2008.

**FOR FURTHER INFORMATION CONTACT:** Peggy Miller, Disaster Assistance Directorate, Federal Emergency Management Agency, 500 C Street, SW., Washington, DC 20472, (202) 646–3886.

**SUPPLEMENTARY INFORMATION:** The notice of an emergency declaration for the State of Texas is hereby amended to include the following areas among those areas for which the President declared an emergency on September 10, 2008:

Bexar, Cherokee, Collin, Comal, Dallas, Denton, El Paso, Ellis, Hunt, Kaufman, Lubbock, Navarro, Smith, Van Zandt, Walker, Waller, and Wood Counties for emergency protective measures (Category B), including direct Federal assistance, under the Public Assistance program.

The following Catalog of Federal Domestic Assistance Numbers (CFDA) are to be used for reporting and drawing funds: 97.030, Community Disaster Loans; 97.031, Cora Brown Fund; 97.032, Crisis Counseling; 97.033, Disaster Legal Services; 97.034, Disaster Unemployment Assistance (DUA); 97.046, Fire Management Assistance Grant; 97.048, Disaster Housing Assistance to Individuals and Households In Presidentially Declared Disaster Areas; 97.049, Presidentially Declared Disaster Assistance—Disaster Housing Operations for Individuals and Households; 97.050, Presidentially Declared Disaster Assistance to Individuals and Households—Other Needs; 97.036, Disaster Grants—Public Assistance (Presidentially Declared Disasters); 97.039, Hazard Mitigation Grant.)

**R. David Paulison,**

*Administrator, Federal Emergency Management Agency.*

[FR Doc. E8–21773 Filed 9–16–08; 8:45 am]

**BILLING CODE 9110–10–P**

## DEPARTMENT OF HOMELAND SECURITY

### Federal Emergency Management Agency

**[FEMA–3290–EM]**

### Texas; Amendment No. 1 to Notice of an Emergency Declaration

**AGENCY:** Federal Emergency Management Agency, DHS.

**ACTION:** Notice.

**SUMMARY:** This notice amends the notice of an emergency declaration for the State of Texas (FEMA–3290–EM), dated August 29, 2008, and related determinations.

**DATES:** *Effective Date:* September 7, 2008.

**FOR FURTHER INFORMATION CONTACT:** Peggy Miller, Disaster Assistance Directorate, Federal Emergency Management Agency, 500 C Street, SW., Washington, DC 20472, (202) 646–3886.

**SUPPLEMENTARY INFORMATION:** Notice is hereby given that the incident period for this emergency is closed effective September 7, 2008.

(The following Catalog of Federal Domestic Assistance Numbers (CFDA) are to be used for reporting and drawing funds: 97.030, Community Disaster Loans; 97.031, Cora Brown Fund; 97.032, Crisis Counseling; 97.033, Disaster Legal Services; 97.034, Disaster Unemployment Assistance (DUA); 97.046, Fire Management Assistance Grant; 97.048, Disaster Housing Assistance to Individuals and Households In Presidential Declared Disaster Areas; 97.049, Presidential Declared Disaster Assistance—Disaster Housing Operations for Individuals and Households; 97.050, Presidential Declared Disaster Assistance to Individuals and Households—Other Needs; 97.036, Disaster Grants—Public Assistance (Presidentially Declared Disasters); 97.039, Hazard Mitigation Grant.)

**R. David Paulison,**

*Administrator, Federal Emergency Management Agency.*

[FR Doc. E8–21661 Filed 9–16–08; 8:45 am]

**BILLING CODE 9110–10–P**

## DEPARTMENT OF HOMELAND SECURITY

### Federal Emergency Management Agency

**[FEMA–1789–DR]**

### Alabama; Major Disaster and Related Determinations

**AGENCY:** Federal Emergency Management Agency, DHS.

**ACTION:** Notice.

**SUMMARY:** This is a notice of the Presidential declaration of a major disaster for the State of Alabama (FEMA–1789–DR), dated September 10, 2008, and related determinations.

**DATES:** *Effective Date:* September 10, 2008.

**FOR FURTHER INFORMATION CONTACT:** Peggy Miller, Disaster Assistance Directorate, Federal Emergency Management Agency, 500 C Street, SW., Washington, DC 20472, (202) 646–3886.

**SUPPLEMENTARY INFORMATION:** Notice is hereby given that, in a letter dated September 10, 2008, the President declared a major disaster under the authority of the Robert T. Stafford Disaster Relief and Emergency Assistance Act, 42 U.S.C. 5121–5207 (the Stafford Act), as follows:

I have determined that the damage in certain areas of the State of Alabama resulting from Hurricane Gustav beginning on August 29, 2008, and continuing, is of sufficient severity and magnitude to warrant a major disaster declaration under the Robert T. Stafford Disaster Relief and Emergency Assistance Act, 42 U.S.C. 5121–5207 (the Stafford Act). Therefore, I declare that such a major disaster exists in the State of Alabama.

In order to provide Federal assistance, you are hereby authorized to allocate from funds available for these purposes such amounts as you find necessary for Federal disaster assistance and administrative expenses.

You are authorized to provide Public Assistance in the designated areas, Hazard Mitigation throughout the State, and any other forms of assistance under the Stafford Act that you deem appropriate. Direct Federal assistance is authorized. Consistent with the requirement that Federal assistance be supplemental, any Federal funds provided under the Stafford Act for Hazard Mitigation will be limited to 75 percent of the total eligible costs. Federal funds provided under the Stafford Act for Public Assistance also will be limited to 75 percent of the total eligible costs, except for any particular projects that are eligible for a higher Federal cost-sharing percentage under the FEMA Public Assistance Pilot Program instituted pursuant to 6 U.S.C. 777. If Other Needs Assistance under Section 408 of the Stafford Act is later requested and warranted, Federal funding under that program also will be limited to 75 percent of the total eligible costs.

Further, you are authorized to make changes to this declaration to the extent allowable under the Stafford Act.

The Federal Emergency Management Agency (FEMA) hereby gives notice that pursuant to the authority vested in the Administrator, under Executive Order 12148, as amended, W. Michael Moore, of FEMA is appointed to act as the Federal Coordinating Officer for this declared disaster.

The following areas of the State of Alabama have been designated as adversely affected by this declared major disaster:

Baldwin and Mobile Counties for Public Assistance. Direct Federal assistance is authorized.

All counties within the State of Alabama are eligible to apply for assistance under the Hazard Mitigation Grant Program.

(The following Catalog of Federal Domestic Assistance Numbers (CFDA) are to be used for reporting and drawing funds: 97.030, Community Disaster Loans; 97.031, Cora Brown Fund; 97.032, Crisis Counseling; 97.033, Disaster Legal Services; 97.034, Disaster Unemployment Assistance (DUA); 97.046, Fire Management Assistance Grant; 97.048, Disaster Housing Assistance to Individuals and Households In Presidentially Declared Disaster Areas; 97.049, Presidentially Declared Disaster Assistance—Disaster Housing Operations for Individuals and Households; 97.050 Presidentially Declared Disaster Assistance to Individuals and Households—Other Needs; 97.036, Disaster Grants—Public Assistance (Presidentially Declared Disasters); 97.039, Hazard Mitigation Grant.)

**R. David Paulison,**

*Administrator, Federal Emergency Management Agency.*

[FR Doc. E8–21776 Filed 9–16–08; 8:45 am]

**BILLING CODE 9110–10–P**

## DEPARTMENT OF HOMELAND SECURITY

### Federal Emergency Management Agency

**[FEMA–1786–DR]**

### Louisiana; Major Disaster and Related Determinations

**AGENCY:** Federal Emergency Management Agency, DHS.

**ACTION:** Notice.

**SUMMARY:** This is a notice of the Presidential declaration of a major disaster for the State of Louisiana (FEMA–1786–DR), dated September 2, 2008, and related determinations.

**DATES:** *Effective Date:* September 2, 2008.

**FOR FURTHER INFORMATION CONTACT:** Peggy Miller, Disaster Assistance Directorate, Federal Emergency Management Agency, Washington, DC 20472, (202) 646–2705.

**SUPPLEMENTARY INFORMATION:** Notice is hereby given that, in a letter dated September 2, 2008, the President declared a major disaster under the authority of the Robert T. Stafford Disaster Relief and Emergency Assistance Act, 42 U.S.C. 5121–5206 (the Stafford Act), as follows:

I have determined that the damage in certain areas of the State of Louisiana resulting from Hurricane Gustav beginning on September 1, 2008, and continuing, is of sufficient severity and magnitude to warrant a major disaster declaration under the Robert T. Stafford Disaster Relief and Emergency Assistance Act, 42 U.S.C. 5121–5206 (the Stafford Act). Therefore, I declare that such a major disaster exists in the State of Louisiana.

In order to provide Federal assistance, you are hereby authorized to allocate from funds available for these purposes such amounts as you find necessary for Federal disaster assistance and administrative expenses.

You are authorized to provide Individual Assistance and assistance for debris removal (Category A) under the Public Assistance program in the designated areas and any other forms of assistance under the Stafford Act that you deem appropriate subject to completion of Preliminary Damage Assessments (PDAs), unless you determine that the incident is of such unusual severity and magnitude that PDAs are not required to determine the need for supplemental Federal assistance pursuant to 44 CFR 206.33(d).

Consistent with the requirement that Federal assistance be supplemental, any Federal funds provided under the Stafford Act for Public Assistance and Other Needs Assistance will be limited to 75 percent of the total eligible costs.

Further, you are authorized to make changes to this declaration to the extent allowable under the Stafford Act.

The time period prescribed for the implementation of section 310(a), Priority to Certain Applications for Public Facility and Public Housing Assistance, 42 U.S.C. 5153, shall be for a period not to exceed six months after the date of this declaration.

The Federal Emergency Management Agency (FEMA) hereby gives notice that pursuant to the authority vested in the Administrator, Department of Homeland Security, under Executive Order 12148, as amended, Michael J. Hall, of FEMA is appointed to act as the Federal Coordinating Officer for this declared disaster.

I do hereby determine the following areas of the State of Louisiana to have been affected adversely by this declared major disaster:

Acadia, Allen, Ascension, Assumption, Avoyelles, Beauregard, Cameron, East Baton Rouge, East Feliciana, Evangeline, Iberia, Iberville, Jefferson, Jefferson Davis, Lafayette, Lafourche, Livingston, Orleans, Plaquemines, Pointe Coupee, Rapides, Sabine, St. Bernard, St. Charles, St. James, St. John the Baptist, St. Landry, St. Martin, St. Mary, Terrebonne, Vermilion, Vernon, West Baton Rouge, and West Feliciana Parishes for Individual Assistance and debris removal (Category A) under the Public Assistance program.

(The following Catalog of Federal Domestic Assistance Numbers (CFDA) are to be used for reporting and drawing funds: 97.030, Community Disaster Loans; 97.031, Cora Brown Fund Program; 97.032, Crisis Counseling; 97.033, Disaster Legal Services Program; 97.034, Disaster Unemployment Assistance (DUA); 97.046, Fire Management Assistance; 97.048, Individual and Household Housing; 97.049, Individual and Household Disaster Housing Operations; 97.050 Individual and Household Program—Other Needs; 97.036, Public Assistance Grants; 97.039, Hazard Mitigation Grant Program.)

**R. David Paulison,**

*Administrator, Federal Emergency Management Agency.*

[FR Doc. E8–21680 Filed 9–16–08; 8:45 am]

**BILLING CODE 9110–10–P**

## DEPARTMENT OF HOMELAND SECURITY

### Federal Emergency Management Agency

**[FEMA–1788–DR]**

### Maine; Major Disaster and Related Determinations

**AGENCY:** Federal Emergency Management Agency, DHS.

**ACTION:** Notice.

**SUMMARY:** This is a notice of the Presidential declaration of a major disaster for the State of Maine (FEMA–1788–DR), dated September 9, 2008, and related determinations.

**DATES:** *Effective Date:* September 9, 2008.

**FOR FURTHER INFORMATION CONTACT:** Peggy Miller, Disaster Assistance Directorate, Federal Emergency Management Agency, 500 C Street, SW., Washington, DC 20472, (202) 646–3886.

**SUPPLEMENTARY INFORMATION:** Notice is hereby given that, in a letter dated September 9, 2008, the President declared a major disaster under the authority of the Robert T. Stafford Disaster Relief and Emergency Assistance Act, 42 U.S.C. 5121–5207 (the Stafford Act), as follows:

I have determined that the damage in certain areas of the State of Maine resulting from severe storms, flooding, and tornadoes during the period of July 18 to August 16, 2008, is of sufficient severity and magnitude to warrant a major disaster declaration under the Robert T. Stafford Disaster Relief and Emergency Assistance Act, 42 U.S.C. 5121–5207 (the Stafford Act). Therefore, I declare that such a major disaster exists in the State of Maine.

In order to provide Federal assistance, you are hereby authorized to allocate from funds available for these purposes such amounts as you find necessary for Federal disaster assistance and administrative expenses.

You are authorized to provide Public Assistance in the designated areas, Hazard Mitigation throughout the State, and any other forms of assistance under the Stafford Act that you deem appropriate. Consistent with the requirement that Federal assistance be supplemental, any Federal funds provided under the Stafford Act for Hazard Mitigation will be limited to 75 percent of the total eligible costs. Federal funds provided under the Stafford Act for Public Assistance also will be limited to 75 percent of the total eligible costs, except for any particular projects that are eligible for a higher Federal cost-sharing percentage under the FEMA Public Assistance Pilot Program instituted pursuant to 6 U.S.C. 777. If Other Needs Assistance under Section 408 of the Stafford Act is later requested and warranted, Federal funding under that program also will be limited to 75 percent of the total eligible costs.

Further, you are authorized to make changes to this declaration to the extent allowable under the Stafford Act.

The Federal Emergency Management Agency (FEMA) hereby gives notice that pursuant to the authority vested in the Administrator, under Executive Order 12148, as amended, Philip E. Parr, of FEMA is appointed to act as the Federal Coordinating Officer for this declared disaster.

The following areas of the State of Maine have been designated as adversely affected by this declared major disaster:

Androscoggin, Cumberland, and York Counties for Public Assistance.

All counties within the State of Maine are eligible to apply for assistance under the Hazard Mitigation Grant Program.

(The following Catalog of Federal Domestic Assistance Numbers (CFDA) are to be used for reporting and drawing funds: 97.030, Community Disaster Loans; 97.031, Cora Brown Fund; 97.032, Crisis Counseling; 97.033, Disaster Legal Services; 97.034, Disaster Unemployment Assistance (DUA); 97.046, Fire Management Assistance Grant; 97.048, Disaster Housing Assistance to Individuals and Households In Presidentially Declared Disaster Areas; 97.049, Presidentially Declared Disaster Assistance—Disaster Housing Operations for Individuals and Households; 97.050, Presidentially Declared Disaster Assistance to Individuals and Households—Other Needs, 97.036, Disaster Grants—Public Assistance (Presidentially Declared Disasters); 97.039, Hazard Mitigation Grant.)

**R. David Paulison,**

*Administrator, Federal Emergency Management Agency.*

[FR Doc. E8–21774 Filed 9–16–08; 8:45 am]

BILLING CODE 9110–10–P

## DEPARTMENT OF HOMELAND SECURITY

### Federal Emergency Management Agency

**[FEMA–1787–DR]**

### New Hampshire; Major Disaster and Related Determinations

**AGENCY:** Federal Emergency Management Agency, DHS.

**ACTION:** Notice.

**SUMMARY:** This is a notice of the Presidential declaration of a major disaster for the State of New Hampshire (FEMA–1787–DR), dated September 5, 2008, and related determinations.

**DATES:** *Effective Date:* September 5, 2008.

**FOR FURTHER INFORMATION CONTACT:** Peggy Miller, Disaster Assistance Directorate, Federal Emergency Management Agency, 500 C Street, SW., Washington, DC 20472, (202) 646–3886.

**SUPPLEMENTARY INFORMATION:** Notice is hereby given that, in a letter dated September 5, 2008, the President declared a major disaster under the authority of the Robert T. Stafford Disaster Relief and Emergency Assistance Act, 42 U.S.C. 5121–5207 (the Stafford Act), as follows:

I have determined that the damage in certain areas of the State of New Hampshire resulting from severe storms and flooding during the period of July 24 to August 14, 2008, is of sufficient severity and magnitude to warrant a major disaster declaration under the Robert T. Stafford Disaster Relief and Emergency Assistance Act, 42 U.S.C. 5121–5207 (the Stafford Act). Therefore, I declare that such a major disaster exists in the State of New Hampshire.

In order to provide Federal assistance, you are hereby authorized to allocate from funds available for these purposes such amounts as you find necessary for Federal disaster assistance and administrative expenses.

You are authorized to provide Public Assistance in the designated areas, Hazard Mitigation throughout the State, and any other forms of assistance under the Stafford Act that you deem appropriate. Consistent with the requirement that Federal assistance be supplemental, any Federal funds provided under the Stafford Act for Hazard Mitigation will be limited to 75 percent of the total eligible costs. Federal funds provided under the Stafford Act for Public Assistance also will be limited to 75 percent of the total eligible costs, except for any particular projects that are eligible for a higher Federal cost-sharing percentage under the FEMA Public Assistance Pilot Program instituted pursuant to 6 U.S.C. 777. If Other Needs Assistance under Section 408 of the Stafford Act is later requested and warranted, Federal funding under that program also will be limited to 75 percent of the total eligible costs.

Further, you are authorized to make changes to this declaration to the extent allowable under the Stafford Act.

The Federal Emergency Management Agency (FEMA) hereby gives notice that pursuant to the authority vested in the Administrator, under Executive Order 12148, as amended, Philip E. Parr, of FEMA is appointed to act as the Federal Coordinating Officer for this declared disaster.

The following areas of the State of New Hampshire have been designated as adversely affected by this declared major disaster:

Belknap, Coos, and Grafton Counties for Public Assistance.

All counties within the State of New Hampshire are eligible to apply for assistance under the Hazard Mitigation Grant Program.

(The following Catalog of Federal Domestic Assistance Numbers (CFDA) are to be used for reporting and drawing funds: 97.030, Community Disaster Loans; 97.031, Cora Brown Fund; 97.032, Crisis Counseling; 97.033, Disaster Legal Services; 97.034, Disaster Unemployment Assistance (DUA); 97.046, Fire Management Assistance Grant; 97.048, Disaster Housing Assistance to Individuals and Households in Presidentially Declared Disaster Areas; 97.049, Presidentially Declared Disaster Assistance—Disaster Housing Operations for Individuals and Households; 97.050, Presidentially Declared Disaster Assistance to Individuals and Households—Other Needs; 97.036, Disaster Grants—Public Assistance (Presidentially Declared Disasters); 97.039, Hazard Mitigation Grant.)

**R. David Paulison,**

*Administrator, Federal Emergency Management Agency.*

[FR Doc. E8–21647 Filed 9–16–08; 8:45 am]

BILLING CODE 9110–10–P

## DEPARTMENT OF HOMELAND SECURITY

### Federal Emergency Management Agency

**[FEMA–1785–DR]**

### Florida; Amendment No. 7 to Notice of a Major Disaster Declaration

**AGENCY:** Federal Emergency Management Agency, DHS.

**ACTION:** Notice.

**SUMMARY:** This notice amends the notice of a major disaster declaration for the State of Florida (FEMA–1785–DR), datedAugust 24, 2008, and related determinations.

**DATES:** *Effective Date:* September 8, 2008.

**FOR FURTHER INFORMATION CONTACT:** Peggy Miller, Disaster Assistance Directorate, Federal Emergency Management Agency, 500 C Street, SW., Washington, DC 20472, (202) 646–3886.

**SUPPLEMENTARY INFORMATION:** The notice of a major disaster declaration for the State of Florida is hereby amended to include the following areas among those areas determined to have been adversely affected by the catastrophe declared a major disaster by the President in his declaration of August 24, 2008.

Clay, Flagler, Gulf, Highlands, Martin, Suwannee, and Taylor Counties for Public Assistance.

The following Catalog of Federal Domestic Assistance Numbers (CFDA) are to be used for reporting and drawing funds: 97.030, Community Disaster Loans; 97.031, Cora Brown Fund; 97.032, Crisis Counseling; 97.033, Disaster Legal Services; 97.034, Disaster Unemployment Assistance (DUA); 97.046, Fire Management Assistance Grant; 97.048, Disaster Housing Assistance to Individuals and Households In Presidentially Declared Disaster Areas; 97.049, Presidentially Declared Disaster Assistance—Disaster Housing Operations for Individuals and Households; 97.050 Presidentially Declared Disaster Assistance to Individuals and Households—Other Needs, 97.036, Disaster Grants—Public Assistance

(Presidentially Declared Disasters); 97.039, Hazard Mitigation Grant.)

**R. David Paulison,**

*Administrator, Federal Emergency Management Agency.*

[FR Doc. E8–21648 Filed 9–16–08; 8:45 am]

**BILLING CODE 9110–10–P**

## DEPARTMENT OF HOMELAND SECURITY

### Federal Emergency Management Agency

**[FEMA–1763–DR]**

### Iowa; Amendment No. 21 to Notice of a Major Disaster Declaration

**AGENCY:** Federal Emergency Management Agency, DHS.

**ACTION:** Notice.

**SUMMARY:** This notice amends the notice of a major disaster for the State of Iowa (FEMA–1763–DR), dated May 27, 2008, and related determinations.

**DATES:** *Effective Date:* September 8, 2008.

**FOR FURTHER INFORMATION CONTACT:** Peggy Miller, Disaster Assistance Directorate, Federal Emergency Management Agency, 500 C Street, SW., Washington, DC 20472, (202) 646–3886.

**SUPPLEMENTARY INFORMATION:** Notice is hereby given that, in a letter dated September 8, 2008, the President amended the cost-sharing arrangements regarding Federal funds provided under the authority of the Robert T. Stafford Disaster Relief and Emergency Assistance Act, 42 U.S.C. 5121–5207 (the Stafford Act), in a letter to R. David Paulison, Administrator, Federal Emergency Management Agency, Department of Homeland Security, as follows:

I have determined that the damage in certain areas of the State of Iowa resulting from severe storms, tornadoes, and flooding during the period of May 25 to August 13, 2008, is of sufficient severity and magnitude that special cost sharing arrangements are warranted regarding Federal funds provided under the Robert T. Stafford Disaster Relief and Emergency Assistance Act, 42 U.S.C. 5121–5206 (the Stafford Act).

Therefore, I amend my declarations of May 27, 2008, and June 30, 2008, to authorize Federal funds for all categories of Public Assistance at 90 percent of the total eligible costs.

This adjustment cost sharing applies only to Public Assistance costs and direct Federal assistance eligible for such adjustments under applicable law. The Robert T. Stafford Disaster Relief and Emergency Assistance Act specifically prohibits a similar adjustment for funds provided for Other Needs Assistance (Section 408), and the Hazard Mitigation Grant Program (Section 404). These funds will continue to be reimbursed at 75 percent of total eligible costs.

This cost share is effective as of the date of the President's major disaster declaration.

(The following Catalog of Federal Domestic Assistance Numbers (CFDA) are to be used for reporting and drawing funds: 97.030, Community Disaster Loans; 97.031, Cora Brown Fund; 97.032, Crisis Counseling; 97.033, Disaster Legal Services; 97.034, Disaster Unemployment Assistance (DUA); 97.046, Fire Management Assistance Grant; 97.048, Disaster Housing Assistance to Individuals and Households In Presidentially Declared Disaster Areas; 97.049, Presidentially Declared Disaster Assistance—Disaster Housing Operations for Individuals and Households; 97.050 Presidentially Declared Disaster Assistance to Individuals and Households—Other Needs; 97.036, Disaster Grants—Public Assistance (Presidentially Declared Disasters); 97.039, Hazard Mitigation Grant.)

**R. David Paulison,**

*Administrator, Federal Emergency Management Agency.*

[FR Doc. E8–21659 Filed 9–16–08; 8:45 am]

**BILLING CODE 9110–10–P**

## DEPARTMENT OF HOMELAND SECURITY

### Federal Emergency Management Agency

**[FEMA–1763–DR]**

### Iowa; Amendment No. 20 to Notice of a Major Disaster Declaration

**AGENCY:** Federal Emergency Management Agency, DHS.

**ACTION:** Notice.

**SUMMARY:** This notice amends the notice of a major disaster declaration for the State of Iowa (FEMA–1763–DR), dated May 27, 2008, and related determinations.

**DATES:** *Effective Date:* September 3, 2008.

**FOR FURTHER INFORMATION CONTACT:** Peggy Miller, Disaster Assistance Directorate, Federal Emergency Management Agency, 500 C Street, SW., Washington, DC 20472, (202) 646–3886.

**SUPPLEMENTARY INFORMATION:** Notice is hereby given that pursuant to the President's June 30, 2008, amended declaration authorizing Federal funds for emergency protective measures, including direct Federal assistance, at 90 percent Federal funding of total eligible costs under the Public Assistance Program, the National Oceanic and Atmospheric Administration's National Weather Service River Forecast Center has established that the rivers in the State of Iowa, which have experienced historical flooding, fell below flood stage on August 8, 2008.

(The following Catalog of Federal Domestic Assistance Numbers (CFDA) are to be used for reporting and drawing funds: 97.030, Community Disaster Loans; 97.031, Cora Brown Fund; 97.032, Crisis Counseling; 97.033, Disaster Legal Services; 97.034, Disaster Unemployment Assistance (DUA); 97.046, Fire Management Assistance Grant; 97.048, Disaster Housing Assistance to Individuals and Households in Presidentially Declared Disaster Areas; 97.049, Presidentially Declared Disaster Assistance—Disaster Housing Operations for Individuals and Households; 97.050, Presidentially Declared Disaster Assistance to Individuals and Households—Other Needs, 97.036, Disaster Grants—Public Assistance (Presidentially Declared Disasters); 97.039, Hazard Mitigation Grant.)

**R. David Paulison,**

*Administrator, Federal Emergency Management Agency.*

[FR Doc. E8–21668 Filed 9–16–08; 8:45 am]

**BILLING CODE 9110–10–P**

## DEPARTMENT OF HOMELAND SECURITY

### Federal Emergency Management Agency

**[FEMA–1786–DR]**

### Louisiana; Amendment No. 2 to Notice of a Major Disaster Declaration

**AGENCY:** Federal Emergency Management Agency, DHS.

**ACTION:** Notice.

**SUMMARY:** This notice amends the notice of a major disaster declaration for the State of Louisiana (FEMA–1786–DR), dated September 2, 2008, and related determinations.

**DATES:** *Effective Date:* September 6, 2008.

**FOR FURTHER INFORMATION CONTACT:** Peggy Miller, Disaster Assistance Directorate, Federal Emergency Management Agency, 500 C Street, SW., Washington, DC 20472, (202) 646–3886.

**SUPPLEMENTARY INFORMATION:** The notice of a major disaster declaration for the State of Louisiana is hereby amended to include the following areas among those areas determined to have been adversely affected by the catastrophe declared a major disaster by the President in his declaration of September 2, 2008.

Acadia, Allen, Ascension, Assumption, Avoyelles, Beauregard, Cameron, East Baton Rouge, East Feliciana, Evangeline, Iberia, Iberville, Jefferson, Jefferson Davis, Lafayette,

Lafourche, Livingston, Orleans, Plaquemines, Pointe Coupee, Rapides, Sabine, St. Bernard, St. Charles, St. James, St. John the Baptist, St. Landry, St. Martin, St. Mary, Terrebonne, Vermilion, Vernon, West Baton Rouge, and West Feliciana Parishes for emergency protective measures (Category B), including direct Federal assistance under the Public Assistance program (already designated for Individual Assistance and debris removal [Category A] under the Public Assistance program.)

St. Tammany and Tangipahoa Parishes for emergency protective measures (Category B), including direct Federal assistance under the Public Assistance program (already designated for Individual Assistance.)

Bienville, Bossier, Caddo, Calcasieu, Caldwell, Catahoula, Claiborne, Concordia, De Soto, East Carroll, Franklin, Grant, Jackson, La Salle, Lincoln, Madison, Morehouse, Natchitoches, Ouachita, Red River, Richland, St. Helena, Tensas, Union, Washington, Webster, West Carroll, and Winn Parishes for emergency protective measures (Category B), including direct Federal assistance under the Public Assistance program.

The following Catalog of Federal Domestic Assistance Numbers (CFDA) are to be used for reporting and drawing funds: 97.030, Community Disaster Loans; 97.031, Cora Brown Fund; 97.032, Crisis Counseling; 97.033, Disaster Legal Services; 97.034, Disaster Unemployment Assistance (DUA); 97.046, Fire Management Assistance Grant; 97.048, Disaster Housing Assistance to Individuals and Households In Presidentially Declared Disaster Areas; 97.049, Presidentially Declared Disaster Assistance—Disaster Housing Operations for Individuals and Households; 97.050 Presidentially Declared Disaster Assistance to Individuals and Households—Other Needs, 97.036, Disaster Grants—Public Assistance (Presidentially Declared Disasters); 97.039, Hazard Mitigation Grant.)

**R. David Paulison,**

*Administrator, Federal Emergency Management Agency.*

[FR Doc. E8–21663 Filed 9–16–08; 8:45 am]

BILLING CODE 9110–10–P

## DEPARTMENT OF HOMELAND SECURITY

### Federal Emergency Management Agency

**[FEMA–1786–DR]**

### Louisiana; Amendment No. 1 to Notice of a Major Disaster Declaration

**AGENCY:** Federal Emergency Management Agency, DHS.

**ACTION:** Notice.

**SUMMARY:** This notice amends the notice of a major disaster declaration for the State of Louisiana (FEMA–1786–DR), datedSeptember 2, 2008, and related determinations.

**DATES:** *Effective Date:* September 4, 2008.

**FOR FURTHER INFORMATION CONTACT:** Peggy Miller, Disaster Assistance Directorate, Federal Emergency Management Agency, 500 C Street, SW., Washington, DC 20472, (202) 646–3886.

**SUPPLEMENTARY INFORMATION:** The notice of a major disaster declaration for the State of Louisiana is hereby amended to include the following areas among those areas determined to have been adversely affected by the catastrophe declared a major disaster by the President in his declaration ofSeptember 2, 2008.

St. Tammany and Tangipahoa Parishes for Individual Assistance.

The following Catalog of Federal Domestic Assistance Numbers (CFDA) are to be used for reporting and drawing funds: 97.030, Community Disaster Loans; 97.031, Cora Brown Fund; 97.032, Crisis Counseling; 97.033, Disaster Legal Services; 97.034, Disaster Unemployment Assistance (DUA); 97.046, Fire Management Assistance Grant; 97.048, Disaster Housing Assistance to Individuals and Households in Presidentially Declared Disaster Areas; 97.049, Presidentially Declared Disaster Assistance—Disaster Housing Operations for Individuals and Households; 97.050, Presidentially Declared Disaster Assistance to Individuals and Households—Other Needs; 97.036, Disaster Grants—Public Assistance (Presidentially Declared Disasters);97.039, Hazard Mitigation Grant.)

**R. David Paulison,**

*Administrator, Federal Emergency Management Agency.*

[FR Doc. E8–21665 Filed 9–16–08; 8:45 am]

BILLING CODE 9110–10–P

## DEPARTMENT OF HOMELAND SECURITY

### Federal Emergency Management Agency

**[FEMA–1786–DR]**

### Louisiana; Amendment No. 3 to Notice of a Major Disaster Declaration

**AGENCY:** Federal Emergency Management Agency, DHS.

**ACTION:** Notice.

**SUMMARY:** This notice amends the notice of a major disaster declaration for the State of Louisiana (FEMA–1786–DR), dated September 2, 2008, and related determinations.

**DATES:** *Effective Date:* September 10, 2008.

**FOR FURTHER INFORMATION CONTACT:** Peggy Miller, Disaster Assistance Directorate, Federal Emergency Management Agency, 500 C Street, SW., Washington, DC 20472, (202) 646–3886.

**SUPPLEMENTARY INFORMATION:** The notice of a major disaster declaration for the State of Louisiana is hereby amended to include the following areas among those areas determined to have been adversely affected by the catastrophe declared a major disaster by the President in his declaration of September 2, 2008.

Catahoula, Franklin, Grant, LaSalle, St. Helena, and Washington Parishes for Individual Assistance (already designated for emergency protective measures (Category B), including direct Federal assistance under the Public Assistance.)

The following Catalog of Federal Domestic Assistance Numbers (CFDA) are to be used for reporting and drawing funds: 97.030, Community Disaster Loans; 97.031, Cora Brown Fund; 97.032, Crisis Counseling; 97.033, Disaster Legal Services; 97.034, Disaster Unemployment Assistance (DUA); 97.046, Fire Management Assistance Grant; 97.048, Disaster Housing Assistance to Individuals and Households In Presidentially Declared Disaster Areas; 97.049, Presidentially Declared Disaster Assistance—Disaster Housing Operations for Individuals and Households; 97.050, Presidentially Declared Disaster Assistance to Individuals and Households—Other Needs; 97.036, Disaster Grants—Public Assistance (Presidentially Declared Disasters); 97.039, Hazard Mitigation Grant.)

**R. David Paulison,**

*Administrator, Federal Emergency Management Agency.*

[FR Doc. E8–21771 Filed 9–16–08; 8:45 am]

BILLING CODE 9110–10–P

## DEPARTMENT OF HOMELAND SECURITY

### Federal Emergency Management Agency

**[FEMA–1777–DR]**

### Michigan; Amendment No. 2 to Notice of a Major Disaster Declaration

**AGENCY:** Federal Emergency Management Agency, DHS.

**ACTION:** Notice.

**SUMMARY:** This notice amends the notice of a major disaster declaration for the State of Michigan (FEMA–1777–DR), dated July 14, 2008, and related determinations.

**DATES:** *Effective Date:* September 7, 2008.

**FOR FURTHER INFORMATION CONTACT:** Peggy Miller, Disaster Assistance Directorate, Federal Emergency Management Agency, 500 C Street, SW., Washington, DC 20472, (202) 646–3886.

**SUPPLEMENTARY INFORMATION:** The Federal Emergency Management Agency (FEMA) hereby gives notice that

pursuant to the authority vested in the Administrator, under Executive Order 12148, as amended, Michael H. Smith, of FEMA is appointed to act as the Federal Coordinating Officer for this declared disaster.

This action terminates my appointment of W. Michael Moore as Federal Coordinating Officer for this disaster.

(The following Catalog of Federal Domestic Assistance Numbers (CFDA) are to be used for reporting and drawing funds: 97.030, Community Disaster Loans; 97.031, Cora Brown Fund; 97.032, Crisis Counseling; 97.033, Disaster Legal Services; 97.034, Disaster Unemployment Assistance (DUA); 97.046, Fire Management Assistance Grant; 97.048, Disaster Housing Assistance to Individuals and Households in Presidential Declared Disaster Areas; 97.049, Presidential Declared Disaster Assistance—Disaster Housing Operations for Individuals and Households; 97.050, Presidential Declared Disaster Assistance to Individuals and Households—Other Needs; 97.036, Disaster Grants—Public Assistance (Presidentially Declared Disasters); 97.039, Hazard Mitigation Grant.)

**R. David Paulison,**

*Administrator, Federal Emergency Management Agency.*

[FR Doc. E8–21646 Filed 9–16–08; 8:45 am]

**BILLING CODE 9110–10–P**

## DEPARTMENT OF HOMELAND SECURITY

### Federal Emergency Management Agency

**[FEMA–1773–DR]**

### Missouri; Amendment No. 11 to Notice of a Major Disaster Declaration

**AGENCY:** Federal Emergency Management Agency, DHS.

**ACTION:** Notice.

**SUMMARY:** This notice amends the notice of a major disaster declaration for the State of Missouri (FEMA–1773–DR), dated June 25, 2008, and related determinations.

**DATES:** *Effective Date:* September 8, 2008.

**FOR FURTHER INFORMATION CONTACT:** Peggy Miller, Disaster Assistance Directorate, Federal Emergency Management Agency, 500 C Street, SW., Washington, DC 20472, (202) 646–3886.

**SUPPLEMENTARY INFORMATION:** The notice of a major disaster declaration for the State of Missouri is hereby amended to include the following areas among those areas determined to have been adversely affected by the catastrophe declared a major disaster by the President in his declaration of June 25, 2008.

Callaway County for Individual Assistance.

Chariton, Harrison, and Macon Counties for Individual Assistance (already designated for Public Assistance.)

Adair, Monroe, and Putnam Counties for Individual Assistance and Public Assistance.

Knox, Randolph, Saline, Schuyler, Scotland, and Worth Counties for Public Assistance.

(The following Catalog of Federal Domestic Assistance Numbers (CFDA) are to be used for reporting and drawing funds: 97.030, Community Disaster Loans; 97.031, Cora Brown Fund; 97.032, Crisis Counseling; 97.033, Disaster Legal Services; 97.034, Disaster Unemployment Assistance (DUA); 97.046, Fire Management Assistance Grant; 97.048, Disaster Housing Assistance to Individuals and Households In Presidentially Declared Disaster Areas; 97.049, Presidentially Declared Disaster Assistance—Disaster Housing Operations for Individuals and Households; 97.050 Presidentially Declared Disaster Assistance to Individuals and Households—Other Needs; 97.036, Disaster Grants—Public Assistance (Presidentially Declared Disasters); 97.039, Hazard Mitigation Grant.)

**R. David Paulison,**

*Administrator, Federal Emergency Management Agency.*

[FR Doc. E8–21657 Filed 9–16–08; 8:45 am]

**BILLING CODE 9110–10–P**

## DEPARTMENT OF HOMELAND SECURITY

### Federal Emergency Management Agency

**[FEMA–1773–DR]**

### Missouri; Amendment No. 10 to Notice of a Major Disaster Declaration

**AGENCY:** Federal Emergency Management Agency, DHS.

**ACTION:** Notice.

**SUMMARY:** This notice amends the notice of a major disaster for the State of Missouri (FEMA–1773–DR), dated June 25, 2008, and related determinations.

**DATES:** Effective Date: September 3, 2008.

**FOR FURTHER INFORMATION CONTACT:** Peggy Miller, Disaster Assistance Directorate, Federal Emergency Management Agency, 500 C Street, SW., Washington, DC 20472, (202) 646–3886.

**SUPPLEMENTARY INFORMATION:** Notice is hereby given that the incident period for this declared disaster is now June 1 2008, through and including August 13, 2008.

(The following Catalog of Federal Domestic Assistance Numbers (CFDA) are to be used for reporting and drawing funds: 97.030, Community Disaster Loans; 97.031, Cora Brown Fund; 97.032, Crisis Counseling; 97.033, Disaster Legal Services; 97.034, Disaster Unemployment Assistance (DUA); 97.046, Fire Management Assistance Grant; 97.048, Disaster Housing Assistance to Individuals and Households In Presidentially Declared Disaster Areas; 97.049, Presidentially Declared Disaster Assistance—Disaster Housing Operations for Individuals and Households; 97.050 Presidentially Declared Disaster Assistance to Individuals and Households—Other Needs, 97.036, Disaster Grants—Public Assistance (Presidentially Declared Disasters); 97.039, Hazard Mitigation Grant.)

**R. David Paulison,**

*Administrator, Federal Emergency Management Agency.*

[FR Doc. E8–21667 Filed 9–16–08; 8:45 am]

**BILLING CODE 9110–10–P**

## DEPARTMENT OF HOMELAND SECURITY

### Transportation Security Administration

### Extension of Agency Information Collection Activity Under OMB Review: Law Enforcement Officer Flying Armed Training

**AGENCY:** Transportation Security Administration, DHS.

**ACTION:** 30 Day Notice.

**SUMMARY:** This notice announces that the Transportation Security Administration (TSA) has forwarded the Information Collection Request (ICR), OMB control number 1652–0034, abstracted below to the Office of Management and Budget (OMB) for review and approval of an extension of the currently approved collection under the Paperwork Reduction Act. The ICR describes the nature of the information collection and its expected burden. TSA published a **Federal Register** notice, with a 60-day comment period soliciting comments, of the following collection of information on June 03, 2008, 73 FR 31706. The collection involves the TSA Office of Law Enforcement/Federal Air Marshal Service (OLE/FAMS) maintenance of a database of all federal, state and local law enforcement agencies who have received the Law Enforcement Officer (LEO) Flying Armed Training course.

**DATES:** Send your comments by October 17, 2008. A comment to OMB is most effective if OMB receives it within 30 days of publication.

**ADDRESSES:** Interested persons are invited to submit written comments on the proposed information collection to the Office of Information and Regulatory Affairs, Office of Management and

Budget. Comments should be addressed to Desk Officer, Department of Homeland Security/TSA, and sent via electronic mail to *oira_submission@omb.eop.gov* or faxed to (202) 395–6974.

**FOR FURTHER INFORMATION CONTACT:** Joanna Johnson, Communications Branch, Business Management Office, Operational Process and Technology, TSA–32, Transportation Security Administration, 601 South 12th Street, Arlington, VA 22202–4220; telephone (571) 227–3651; facsimile (703) 603–0822.

**SUPPLEMENTARY INFORMATION:**

**Comments Invited**

In accordance with the Paperwork Reduction Act of 1995 (44 U.S.C. 3501 *et seq.*), an agency may not conduct or sponsor, and a person is not required to respond to, a collection of information unless it displays a valid OMB control number. The ICR documentation is available at *http://www.reginfo.gov.* Therefore, in preparation for OMB review and approval of the following information collection, TSA solicits comments to—

(1) Evaluate whether the proposed information requirement is necessary for the proper performance of the functions of the agency, including whether the information will have practical utility;

(2) Evaluate the accuracy of the agency's estimate of the burden;

(3) Enhance the quality, utility, and clarity of the information to be collected; and

(4) Minimize the burden of the collection of information on those who are to respond, including using appropriate automated, electronic, mechanical, or other technological collection techniques or other forms of information technology.

**Information Collection Requirement**

*Title:* Law Enforcement Officer Flying Armed Training.

*Type of Request:* Extension of a currently approved collection.

*OMB Control Number:* 1652–0034.

*Forms(s):* N/A.

*Affected Public:* Law Enforcement Officers.

*Abstract:* TSA requires federal, state and local law enforcement officers (LEOs) who have a mission need to fly armed to complete the LEO Flying Armed Training under 49 CFR 1544.219. Eligibility is based on requirements stated in 49 CFR 1544.219. TSA will gather information, including agency name, address, and name of each individual who will receive the training, from law enforcement agencies that have requested the LEO Flying Armed training course. Applicant verification ensures that only LEOs with a valid need to fly armed aboard commercial aircraft receive training. Applicants come from federal, state and local law enforcement agencies throughout the country.

*Number of Respondents:* 600.

*Estimated Annual Burden Hours:* 50 hours annually.

Issued in Arlington, Virginia, on September 11, 2008.

**John Manning,**

*Acting Director Business Management Office, Office of Information Technology.*

[FR Doc. E8–21720 Filed 9–16–08; 8:45 am]

**BILLING CODE 9110–05–P**

---

## DEPARTMENT OF HOMELAND SECURITY

### Transportation Security Administration

### Extension of Agency Information Collection Activity Under OMB Review: Airport Security

**AGENCY:** Transportation Security Administration, DHS.

**ACTION:** 30-day notice.

**SUMMARY:** This notice announces that the Transportation Security Administration (TSA) has forwarded the Information Collection Request (ICR), OMB control number 1652–0002, abstracted below, to the Office of Management and Budget (OMB) for review and approval of an extension of the currently-approved collection under the Paperwork Reduction Act. The ICR describes the nature of the information collection and its expected burden. TSA published a **Federal Register** notice, with a 60-day comment period soliciting comments, of the following collection of information on June 6, 2008, 73 FR 32344. The collection involves implementing certain provisions of the Aviation Security Improvement Act of 1990 and the Aviation and Transportation Security Act that relate to the security of persons and property at airports operating in commercial air transportation.

**DATES:** Send your comments by October 17, 2008. A comment to OMB is most effective if OMB receives it within 30 days of publication.

**ADDRESSES:** Interested persons are invited to submit written comments on the proposed information collection to the Office of Information and Regulatory Affairs, Office of Management and Budget. Comments should be addressed to Desk Officer, Department of Homeland Security/TSA, and sent via electronic mail to *oira_submission@omb.eop.gov* or faxed to (202) 395–6974.

**FOR FURTHER INFORMATION CONTACT:** Joanna Johnson, Office of Information and Technology, TSA–32, Transportation Security Administration, 601 South 12th Street, Arlington, VA 22202–4220; telephone (571) 227–3651; facsimile (703) 603–0822.

**SUPPLEMENTARY INFORMATION:**

**Comments Invited**

In accordance with the Paperwork Reduction Act of 1995 (44 U.S.C. 3501 *et seq.*), an agency may not conduct or sponsor, and a person is not required to respond to, a collection of information unless it displays a valid OMB control number. The ICR documentation is available at *www.reginfo.gov.* Therefore, in preparation for OMB review and approval of the following information collection, TSA is soliciting comments to—

(1) Evaluate whether the proposed information requirement is necessary for the proper performance of the functions of the agency, including whether the information will have practical utility;

(2) Evaluate the accuracy of the agency's estimate of the burden;

(3) Enhance the quality, utility, and clarity of the information to be collected; and

(4) Minimize the burden of the collection of information on those who are to respond, including using appropriate automated, electronic, mechanical, or other technological collection techniques or other forms of information technology.

**Information Collection Requirement**

*Title:* Airport Security.

*Type of Request:* Extension of a currently approved collection.

*OMB Control Number:* 1652–0002.

*Forms(s):* NA.

*Affected Public:* Airport operators regulated under 49 CFR part 1542.

*Abstract:* 49 CFR part 1542, Airport Security, implements certain provisions of the Aviation Security Improvement Act of 1990 (Pub. L. 101–604, November 16, 1990) and the Aviation and Transportation Security Act (Pub. L. 107–71, November 19, 2001), and 49 U.S.C. 44903, relating to the security of persons and property at airports operating in commercial air transportation. TSA is seeking renewal of this information collection because airport security programs are needed to provide for the safety and security of persons and property on an aircraft operating in commercial air transportation against acts of criminal violence, aircraft piracy, and the

introduction of an unauthorized weapon, explosive, or incendiary onto an aircraft. The information being collected aids in the effectiveness of passenger screening procedures and other security measures and assists TSA in complying with Congressional mandates. This information collection permits TSA to conduct more effective oversight, planning, and regulatory functions related the airport operators.

*Number of Respondents:* 458.

*Estimated Annual Burden Hours:* An estimated 546,018 hours annually.

Issued in Arlington, Virginia, on September 11, 2008.

**John Manning,**

*Acting Director, Business Management Office, Office of Information Technology.*

[FR Doc. E8–21750 Filed 9–16–08; 8:45 am]

**BILLING CODE 9110–05–P**

## DEPARTMENT OF THE INTERIOR

### Fish and Wildlife Service

**[FWS–R6–ES–2008–N0229; 60120–1113–0000–D2]**

### Endangered and Threatened Wildlife and Plants; Permits

**AGENCY:** Fish and Wildlife Service, Interior.

**ACTION:** Notice of receipt of applications for permits.

**SUMMARY:** We announce our receipt of applications to conduct certain activities pertaining to enhancement of survival of endangered species.

**DATES:** Written comments on this request for a permit must be received by October 17, 2008.

**ADDRESSES:** Written data or comments should be submitted to the Assistant Regional Director-Ecological Services, U.S. Fish and Wildlife Service, P.O. Box 25486, Denver Federal Center, Denver, Colorado 80225–0486; facsimile 303–236–0027. Before including your address, phone number, e-mail address, or other personal indentifying information in your comment, you should be aware that your entire comment—including your personal identifying information—may be made publicly available at any time. While you can ask us in your comment to withhold your personal identifying information from public review, we cannot guarantee that we will be able to do so. Documents and other information submitted with these applications are available for review, subject to the requirements of the Privacy Act [5 U.S.C. 552A] and Freedom of Information Act [5 U.S.C. 552], by any party who submits a request for a copy of such documents within 30 days of the date of publication of this notice to Kris Olsen, by mail or by telephone at 303–236–4256. All comments received from individuals become part of the official public record.

**SUPPLEMENTARY INFORMATION:** The following applicants have requested issuance of enhancement of survival permits to conduct certain activities with endangered species pursuant to Section 10(a)(1)(A) of the Endangered Species Act of 1973, as amended (16 U.S.C. 1531 *et seq.*).

Applicant—Bureau of Land Management, Utah Field Office, Salt Lake City, Utah, TE–165829. The applicant requests a permit amendment to add survey for *Lepidium barnebyanum* (Barneby ridge-cress), *Schoenocrambe argillacea* (Barneby reed-mustard), *Astragalus holmgreniorum* (Holmgren milk-vetch), *Lesquerella tumulosa* (Kodachrome bladderpod), *Pediocactus despainii* (San Rafael cactus), *Astragalus ampullarioides* (Shivwitz milk-vetch), *Schoenocrambe suffrutescens* (Shrubby reed-mustard), *Sclerocactus wrightiae* (Wright cactus) on National Park Service land in Utah in conjunction with recovery activities throughout the species' range for the purpose of enhancing its survival and recovery.

Applicant—Denver Botanic Gardens, Denver, Colorado, TE–106182. The applicant requests a permit amendment to add survey for *Eriogonum pelinophilum* (Clay-loving wild-buckwheat), *Pediocactus knowltonii* (Knowlton cactus), *Astragalus humillimus* (Mancos milk-vetch), *Phacelia formosula* (North Park phacelia), *Astragalus osterhoutii* (Osterhout milk-vetch), *Penstemon penlandii* (Penland beardtongue) in conjunction with recovery activities throughout the species' range for the purpose of enhancing its survival and recovery.

Dated: August 25, 2008.

**James J. Slack,**

*Regional Director, Denver, Colorado.*

[FR Doc. E8–21692 Filed 9–16–08; 8:45 am]

**BILLING CODE 4310–55–P**

## DEPARTMENT OF THE INTERIOR

### Bureau of Land Management

**[WY–100–1310–DB]**

### Notice of Availability of the Record of Decision for the Supplemental Environmental Impact Statement for the Pinedale Anticline Oil and Gas Exploration and Development Project

**AGENCY:** Bureau of Land Management, Interior.

**ACTION:** Notice of availability.

**SUMMARY:** The Bureau of Land Management (BLM) announces the availability of the Record of Decision (ROD) for the Supplemental Environmental Impact Statement (SEIS) for the Pinedale Anticline Oil and Gas Exploration and Development Project located in Sublette County, Wyoming. C. Stephen Allred, Assistant Secretary of the United States Department of the Interior signed the ROD on September 12, 2008, which constitutes the final decision of the BLM and makes the decisions effective immediately.

**ADDRESSES:** Copies of the ROD are available electronically on the following Web site: *http://www.blm.gov/wy/st/en/info/NEPA/pfodocs/anticline/seis.html*. Copies of the ROD are available for public inspection at the following BLM office locations:

- Bureau of Land Management, Wyoming State Office, 5353 Yellowstone Road, Cheyenne, Wyoming 82003.
- Bureau of Land Management, Pinedale Field Office, 1625 West Pine Street, Pinedale, Wyoming 82941.

**FOR FURTHER INFORMATION CONTACT:** Chuck Otto, Pinedale Field Manager, 1625 West Pine Street, Pinedale, Wyoming 82941. Mr. Otto may be contacted by telephone at (307) 367–5300.

**SUPPLEMENTARY INFORMATION:** A copy of the ROD has been made available to affected Federal, State, and local government agencies and interested parties. This ROD addresses approximately 198,000 acres of land. Nearly 80 percent administered by the BLM Pinedale Field Office, Sublette County, Wyoming. Approximately 83 percent of the mineral estate underlying the Pinedale Anticline Project Area is federally owned.

Issues that were analyzed in the SEIS include direct, indirect and cumulative impacts of the project on big game, sage grouse, raptors, migratory birds and their habitat. Impacts to ground and surface water, air quality (both visibility and ozone), and socio-economic effects

of the project on State and local governments were also analyzed. Decisions in the SEIS ROD approve the concentrated phased development of the oil and gas resource, while providing protection and mitigation for wildlife, air, water and other project related impacts, including a monitoring and mitigation fund.

The SEIS ROD resulted from a collaborative process that included the State of Wyoming, the Environmental Protection Agency, county and municipal governments, tribal governments, and other Federal agencies. Public comments from many individuals and organizations were also considered in the Draft and Final SEIS and contributed to the decisions in the ROD.

The Notice of Intent to prepare a SEIS for the Pinedale Anticline Oil and Gas Exploration and Development Project was published in the **Federal Register** on October 21, 2005. A Notice of Availability (NOA) for the Draft SEIS was published on December 15, 2006. Based on public comments, the BLM determined that two additional alternatives needed to be analyzed and made available for public review. A NOA for a Revised Draft SEIS was published on December 28, 2007. The public comment period on the Revised Draft SEIS closed February 11, 2008.

**Donald A. Simpson,**

*Acting State Director.*

[FR Doc. E8–21627 Filed 9–16–08; 8:45 am]

**BILLING CODE 4310–22–P**

## DEPARTMENT OF THE INTERIOR

### National Park Service

### Final Environmental Impact Statement for the General Management Plan, for Manassas National Battlefield Park, VA

**AGENCY:** Department of the Interior, National Park Service.

**ACTION:** Notice of Availability of the Final Environmental Impact Statement for the General Management Plan for Manassas National Battlefield Park.

**SUMMARY:** Pursuant to the National Environmental Policy Act of 1969, 42 U.S.C. 4332(C), the National Park Service (NPS) announces the availability of a Final Environmental Impact Statement for the General Management Plan for Manassas National Battlefield Park (FEIS/GMP). The General Management Plan will guide management decisions related to cultural and natural resources, visitation, and park development for the next 15 to 20 years. The responsible official is Mr. Joseph M. Lawler, Regional Director, National Capital Region.

**DATES:** A 30-day no action period will follow publication by the Environmental Protection Agency of the Notice of Availability of the FEIS/GMP.

**ADDRESSES:** Information will be available for public review in the Office of the Superintendent, Manassas National Battlefield Park, 12521 Lee Highway, Manassas, Virginia 20109–2005. Copies of the document may also be accessed via Internet connection at the NPS Planning, Environment, and Public Comment (PEPC) Web site at *http://parkplanning.nps.gov*. Paper and electronic copies on CD–ROM of the FEIS/GMP are also available by request. Interested persons and organizations can request copies by telephone at (703) 754–1861, by e-mail at *Ed_W_Clark@nps.gov*, or by written request to Mr. Ed W. Clark, Superintendent, Manassas National Battlefield Park, 12521 Lee Highway, Manassas, Virginia 20109–2005.

**SUPPLEMENTARY INFORMATION:** The Draft Environmental Impact Statement for the General Management Plan was on review from December 31, 2005, to February 27, 2006. Responses to public comment are addressed in the FEIS/GMP.

The FEIS/GMP analyzes three alternatives for managing Manassas National Battlefield Park. The plan is intended to provide a foundation to help park managers guide park programs and set priorities for the management of the park for the next 15 to 20 years. The FEIS/GMP analyzes the environmental impacts of the alternatives considered on natural and cultural resources, visitor experience and interpretation, transportation within the park, and park operations.

Alternative A, the no-action alternative, is a continuation of present management approaches regarding visitor experience and resource protection. Alternative B, the preferred alternative, would focus on providing a comprehensive look at both battles. The preferred alternative, as it was described in the Draft Environmental Impact Statement for the General Management Plan, has been modified in the FEIS/GMP based on public and agency comments that were received during the review period for the Draft Environmental Impact Statement for the General Management Plan. Alternative C would focus on providing a comprehensive look at the defining moments of the two battles.

**FOR FURTHER INFORMATION CONTACT:** Ed W. Clark, Superintendent, Manassas National Battlefield Park, 12521 Lee Highway, Manassas, Virginia 20109–2005, telephone (703) 754–1861, *Ed_W_Clark@nps.gov* .

Dated: May 16, 2008.

**Joseph M. Lawler,**

*Regional Director, National Capital Region.*

**Editorial Note:** This document was received in the Office of the Federal Register on September 12, 2008.

[FR Doc. E8–21694 Filed 9–16–08; 8:45 am]

**BILLING CODE 4312–49–P**

## DEPARTMENT OF THE INTERIOR

### National Park Service

### Committee for the Preservation of the White House; Notice of Public Meeting

**AGENCY:** Department of the Interior, National Park Service.

**ACTION:** Notice of meeting.

**SUMMARY:** Notice is hereby given in accordance with the Federal Advisory Committee Act that a meeting of the Committee for the Preservation of the White House will be held at the White House at 2 p.m. on Thursday, October 16, 2008.

**DATES:** October 16, 2008.

**FOR FURTHER INFORMATION CONTACT:** Executive Secretary, Committee for the Preservation of the White House, 1100 Ohio Drive, SW., Washington, DC 20242. (202) 619–6344.

**SUPPLEMENTARY INFORMATION:** It is expected that the meeting agenda will include policies, goals, and long-range plans. The meeting will be open, but subject to appointment and security clearance requirements. Clearance information, which includes full name, date of birth and Social Security number, must be received by October 9, 2008. Due to the present mail delays being experienced, clearance information should be faxed to (202) 619–6353 in order to assure receipt by deadline. Inquiries may be made by calling the Committee for the Preservation of the White House between 9 a.m. and 4 p.m. weekdays at (202) 619–6344. Written comments may be sent to the Executive Secretary, Committee for the Preservation of the White House, 1100 Ohio Drive, SW., Washington, DC 20242.

Dated: September 5, 2008.

**Ann Bowman Smith,**

*Executive Secretary, Committee for the Preservation of the White House.*

[FR Doc. E8–21664 Filed 9–16–08; 8:45 am]

**BILLING CODE 4312–51–P**

## DEPARTMENT OF THE INTERIOR

## President's Council on Integrity and Efficiency; Senior Executive Service Performance Review Board Membership

**AGENCY:** Office of Inspector General, Interior.

**ACTION:** Notice.

**SUMMARY:** This notice sets forth the names and titles of the current membership of the President's Council on Integrity and Efficiency (PCIE) Performance Review Board as of September 11, 2008.

**DATES:** *Effective Date:* September 17, 2008.

**FOR FURTHER INFORMATION CONTACT:** Individual Offices of Inspectors General at the telephone numbers listed below.

**SUPPLEMENTARY INFORMATION:**

### I. Background

The Inspector General Act of 1978, as amended, created the Offices of Inspectors General as independent and objective units to conduct and supervise audits and investigations relating to Federal programs and operations. Executive Order 12301 (March 26, 1981) established the President's Council on Integrity and Efficiency (PCIE) to coordinate and enhance governmental efforts to promote integrity and efficiency and to detect and prevent fraud, waste, and abuse in Federal programs. The PCIE is an interagency committee chaired by the Office of Management and Budget's Deputy Director for Management, and is comprised principally of the 29 Presidential appointed Inspectors General (IGs).

### II. PCIE Performance Review Board

Under 5 U.S.C. 4314(c)(1)–(5), and in accordance with regulations prescribed by the Office of Personnel Management, each agency is required to establish one or more Senior Executive Service (SES) performance review boards. The purpose of these boards is to review and evaluate the initial appraisal of a senior executive's performance by the supervisor, along with any recommendations to the appointing authority relative to the performance of the senior executive. The current members of the President's Council on Integrity and Efficiency Performance Review Board, as of October 2, 2006, are as follows:

**Agency for International Development**

*Phone Number: (202) 712–1150*

PCIE/ECIE Liaison—Thereasa L. Lyles (202) 712–1393

Michael G. Carroll, Deputy Inspector General
Adrienne Rish, Assistant Inspector General for Investigations
Howard Hendershot, Deputy Assistant Inspector General for Investigations
Joe Farinella (SFS), Assistant Inspection General for Audit
Bruce Boyer (SFS), Deputy Assistant Inspector General for Audit
Paula Hayes, Assistant Inspector General for Management
Lisa Goldfluss, Counsel to the Inspector General
Dona Dinkler, Chief of Staff
Alvin Brown, Assistant Inspector General for Millennium Challenge Corporation

**Department of Agriculture**

*Phone Number: (202) 720–8001*

PCIE/ECIE Liaison—Cheryl Viani (202) 720–8001

Kathleen S. Tighe, Deputy Inspector General
David R. Gray, Counsel to the Inspector General
Robert W. Young, Jr., Assistant Inspector General for Audit
Marlane T. Evans, Deputy Assistant Inspector General for Audit
Tracy A. LaPoint, Deputy Assistant Inspector General for Audit
Karen L. Ellis, Assistant Inspector General for Investigations
Geoffrey Cherrington, Deputy Assistant Inspector General for Investigations
Suzanne M. Murrin, Assistant Inspector General for Management
Rod DeSmet, Assistant Inspector General for Inspections and Research

**Department of Commerce**

*Phone Number: (202) 482–4661*

PCIE/ECIE Liaison—Cecilia Young (202) 482–4661

Edward L. Blansitt, Deputy Inspector General
Vacant, Assistant Inspector General for Investigation
Allison C. Lerner, Counsel to the Inspector General
Judith J. Gordon, Assistant Inspector General for Audit and Evaluation
Vacant, Assistant Inspector General for Auditing
Vacant, Assistant Inspector General for Inspections and Program Evaluation
Vacant, Assistant Inspector General for Compliance and Administration

**Department of Defense**

*Phone Number: (703) 604–8324*

PCIE/ECIE Liaison—John R. Crane (703) 604–8324

Thomas F. Gimble, Principal Deputy Inspector General
Patricia A. Brannin, Deputy Inspector General for Intelligence
Donald M. Horstman, Deputy Inspector General for Policy and Oversight
John R. Crane, Assistant Inspector General for Communications and Congressional Liaison
William Brem Morrison, III, Assistant Inspector General for Inspections and Evaluations, Office of the Deputy Inspector General for Policy and Oversight
Joseph R. Oliva, Assistant Inspector General for Readiness and Operations Support, Office of the Deputy Inspector General for Auditing

**Department of Education**

*Phone Number: (202) 245–6900*

PCIE/ECIE Liaison—Catherine Grant (202) 245–7023

Mary Mitchelson, Acting Inspector General and Deputy Inspector General
Wanda Scott, Assistant Inspector General for Evaluations, Inspections and Management Services
Keith West, Assistant Inspector General for Audit Services
George Rippey, Deputy Assistant Inspector General for Audit Services
William Hamel, Assistant Inspector General for Investigative Services
Charles Coe, Assistant Inspector General for Information Technology and Computer Crimes Investigation
Howard Sorenson, Acting Counsel to the Inspector General

**Department of Energy**

*Phone Number: (202) 586–4393*

PCIE/ECIE Liaison—Juston Fontaine (202) 586–1959

John Hartman, Assistant Inspector General for Investigations
Chris Sharpley, Deputy Inspector General for Investigations and Inspections
Rickey Hass, Assistant Inspector General for Financial Audits
Linda Snider, Assistant Inspector General for Audit Planning and Administration
Sanford Parnes, Counsel to the Inspector General
George Collard, Assistant Inspector General for National Nuclear Security Administration and Energy Audits

**Department of Health and Human Services**

*Phone Number: (202) 619–3148*

PCIE/ECIE Liaison—Sheri Denkensohn (202) 619–3148

Lewis Morris, Chief Counsel to the Inspector General
Sam Shellenberger, Deputy Inspector General for the Office of Management and Policy
Joe Green, Assistant Inspector General for Financial Management and Regional Operations

**Department of Homeland Security**

*Phone Number: (202) 254–4100*

PCIE/ECIE Liaison—Denise S. Johnson (202) 254–4100

James L. Taylor, Deputy Inspector General
Matt Jadacki, Deputy Inspector General for Emergency Management Oversight
Richard N. Reback, Counsel to the Inspector General
Anne L. Richards, Assistant Inspector General for Audits
Edward Stulginsky, Deputy Assistant Inspector General for Audits
Sondra McCauley, Deputy Assistant Inspector General for Planning and Oversight, Audits
Carlton I. Mann, Assistant Inspector General for Inspections
Thomas M. Frost, Assistant Inspector General for Investigations
James Gaughran, Deputy Assistant Inspector General for Investigations
Frank Deffer, Assistant Inspector General for Information Technology
Edward F. Cincinnati, Assistant Inspector General for Administration

**Department of Housing and Urban Development**

*Phone Number: (202) 708–0430*

PCIE/ECIE Liaison—Helen Albert (202) 708–0614, Ext. 8187

Michael P. Stephens, Deputy Inspector General
James A. Heist, Assistant Inspector General for Audit
Bryan P. Saddler, Counsel to the Inspector General
John McCarty, Deputy Assistant Inspector General for Inspections and Evaluations
Lester Davis, Deputy Assistant Inspector General for Investigations
Randy McGinnis, Deputy Assistant Inspector General for Audit
Helen Albert, Deputy Assistant Inspector General for Management and Policy

**Department of the Interior**

*Phone Number: (202) 208–5745*

PCIE/ECIE Liaison—Deborah Holmes (202) 208–2380

Mary Kendall, Deputy Inspector General
Michael Wood, Chief of Staff
Robert Romanyshyn, Assistant Inspector General for Audits
Kimberly Elmore, Assistant Inspector General for Inspections and Evaluations
Steve Hardgrove, Assistant Inspector General for Investigations
John Dupuy, Principal Deputy Assistant Inspector General for Investigations
Renee Pettis, Assistant Inspector General for Management
Thomas Moyle, Deputy Assistant Inspector General for Management

**Department of Justice**

*Phone Number: (202) 514–3435*

PCIE/ECIE Liaison—Cynthia Schnedar (202) 514–3435

Paul K. Martin, Deputy Inspector General
Gail A. Robinson, General Counsel
Raymond J. Beaudet, Assistant Inspector General for Audit
Carol F. Ochoa, Assistant Inspector General for Oversight and Review
Gregory T. Peters, Assistant Inspector General for Management and Planning
Thomas F. McLaughlin, Assistant Inspector General for Investigations

**Department of Labor**

*Phone Number: (202) 693–5100*

PCIE/ECIE Liaison—Susan Carnohan (202) 693–5283

Daniel R. Petrole, Deputy Inspector General
Nancy F. Ruiz de Gamboa, Assistant Inspector General for Management and Policy
Thomas F. Farrell, Assistant Inspector General for Labor Racketeering and Fraud Investigations
Elliot P. Lewis, Assistant Inspector General for Audit
Michael A. Raponi, Deputy Assistant Inspector General for Audit
Howard L. Shapiro, Counsel for the Inspector General
Richard S. Clark, Deputy Assistant Inspector General for Labor Racketeering and Fraud Investigations

**Department of State and the Broadcasting Board of Governors**

*Phone Number: (202) 663–6340*

PCIE/ECIE Liaison—Michael Wolfson (703) 284–2710

Ambassador Harold W. Geisel, Acting Inspector General
Ambassador Harold W. Geisel, Deputy Inspector General
Erich O. Hart, General Counsel
Mark Duda, Assistant Inspector General for Audits
James B. Burch, Assistant Inspector General for Investigations
Robert B. Peterson, Assistant Inspector General for Inspections
Richard (Nick) Arnston, Assistant Inspector General for the Middle East Region
Cynthia Saboe, Acting Assistant Inspector General for Administration

**Department of Transportation**

*Phone Number: (202) 366–1959*

PCIE/ECIE Liaison—Madeline Chulumovich (202) 366–6512

Theodore P. Alves, Deputy Inspector General
David A. Dobbs, Principal Assistant Inspector General for Auditing and Evaluation
Lou Dixon, Assistant Inspector General for Aviation & Special Program Audits
Matthew Hampton, Deputy Assistant Inspector General for Aviation & Special Program Audits
Rebecca C. Leng, Assistant Inspector General for Financial and Information Technology Audits
Joe Come, Assistant Inspector General for Highway and Transit Audits
Rosalyn Millman, Deputy Assistant Inspector General for Highway and Transit Audits
David E. Tornquist, Assistant Inspector General for Rail and Maritime Program Audits and Economic Analysis
Mark Zabrasky, Assistant Inspector General for Acquisition and Procurement Audits
Charles H. Lee, Jr., Assistant Inspector General for Investigations
Richard C. Beitel, Jr., Assistant Inspector General for Washington Investigative Operations
Brian A. Dettelbach, Assistant Inspector General for Legal, Legislative, and External Affairs

**Department of the Treasury**

*Phone Number: (202) 622–1090*

PCIE/ECIE Liaison—Nicolas J. Ojeda (202) 927–5779

Dennis S. Schindel, Deputy Inspector General
Debra L. McGruder, Acting Assistant Inspector General for Management
Marla A. Freedman, Assistant Inspector General for Audit
David S. Smith, Acting Assistant Inspector General for Investigations
Robert A. Taylor, Deputy Assistant Inspector General for Program Audit

Richard K. Delmar, Counsel to the Inspector General

**Treasury Inspector General for Tax Administration/Department of the Treasury**

*Phone Number: (202) 622–6500*

PCIE/ECIE Liaison—Bonnie Heald (202) 927–7037

Joseph Hungate, Principal Deputy Inspector General
Michael Phillips, Deputy Inspector General for Audit
Michael McKenney, Associate Inspector General for Wage and Investment Income
Timothy Camus, Assistant Inspector General for Investigations
Michael A. Delgado, Assistant Inspector General for Investigations
Roderick Fillinger, Chief Counsel to the Inspector General
Larry Koskinen, Associate Inspector General for Mission Support

**Department of Veterans Affairs**

*Phone Number: (202) 461–4720*

PCIE/ECIE Liaison—Catherine Gromek (202) 461–4720

James O'Neill, Assistant Inspector General for Investigations
Joseph G. Sullivan, Deputy Assistant Inspector General for Investigations
Belinda J. Finn, Assistant Inspector General for Auditing
Linda A. Halliday, Deputy Assistant Inspector General for Auditing
Richard Ehrlichman, Assistant Inspector General for Management and Administration
Joseph Vallowe, Deputy Assistant Inspector General for Management and Administration
John Daigh, Assistant Inspector General for Healthcare Inspections
Dana L. Moore, Deputy Assistant Inspector General for Healthcare Inspections
Maureen Regan, Counselor to the Inspector General

**Environmental Protection Agency**

*Phone Number: (202) 566–0847*

PCIE/ECIE Liaison—Eileen McMahon (202) 566–2546

Mark Bialek, Associate Deputy Inspector General and Counsel to the Inspector General
Eileen McMahon, Assistant Inspector General for Congressional, Public Liaison, and Management
Melissa Heist, Assistant Inspector General for Audit
Wade Najjum, Assistant Inspector General for Program Evaluation
Stephen Nesbitt, Assistant Inspector General for Investigations
Patricia Hill, Assistant Inspector General for Mission Systems

**Equal Employment Opportunity Commission**

*Phone Number: (202) 663–4327*

PCIE/ECIE Liaison—Larkin Jennings (202) 663–4391

Aletha L. Brown, Inspector General
Milton A. Mayo, Deputy Inspector General
Joyce T. Willoughby, Counsel to the Inspector General

**Federal Trade Commission**

*Phone Number: (202) 326–2800*

PCIE/ECIE Liaison—Zisa Lubarov-Walton (202) 326–2800

John Seeba, Inspector General

**General Services Administration**

*Phone Number: (202) 501–0450*

PCIE/ECIE Liaison—Sarah S. Breen (202) 219–1351

Eugene L. Waszily (Acting), Deputy Inspector General
Kevin A. Buford, Counsel to the Inspector General
Andrew Patchan, Jr., Assistant Inspector General for Auditing
Regina M. O'Brien, Deputy Assistant Inspector General for Auditing
Charles J. Augone, Assistant Inspector General for Investigations
Gregory G. Rowe, Deputy Assistant Inspector General for Investigations

**National Aeronautics and Space Administration**

*Phone Number: (202) 358–1220*

PCIE/ECIE Liaison—Renee Juhans (202) 358–1712

Thomas Howard, Deputy Inspector General
Frank LaRocca, Counsel to the Inspector General
Kevin Winters, Assistant Inspector General for Investigations
Evelyn Klemstine, Assistant Inspector General for Audits
Alan Lamoreaux, Assistant Inspector General for Management and Policy

**National Science Foundation**

*Phone Number: (703) 292–7100*

PCIE/ECIE Liaison—Bruce Carpel (703) 292–4982, Maury Pully (703) 292–5059

Thomas (Tim) Cross, Deputy Inspector General
Peggy Fischer, Assistant Inspector General for Investigations

**Peace Corps**

*Phone Number: (202) 692–2900*

PCIE/ECIE Liaison—Kathy Buller (703) 692–2916

Kathy Buller, Inspector General (Foreign Service)

**Nuclear Regulatory Commission**

*Phone Number: (301) 415–5930*

PCIE/ECIE Liaison—Deborah S. Huber (301) 415–5978

David C. Lee, Deputy Inspector General
Stephen D. Dingbaum, Assistant Inspector General for Audits
Joseph A. McMillan, Assistant Inspector General for Investigations

**Office of Personnel Management**

*Phone Number: (202) 606–1200*

PCIE/ECIE Liaison—Gary R. Acker (202) 606–2444

Norbert E. Vint, Deputy Inspector General
Terri Fazio, Assistant Inspector General for Management
Michael R. Esser, Assistant Inspector General for Audits
J. David Cope, Assistant Inspector General for Legal Affairs
Jeffery E. Cole, Deputy Assistant Inspector General for Audits

**Railroad Retirement Board**

*Phone Number: (312) 751–4690*

PCIE/ECIE Liaison—Jill Roellig (312) 751–4993

William Tebbe, Assistant Inspector General for Investigations
Letty Benjamin Jay, Assistant Inspector General for Audit

**Small Business Administration**

*Phone Number: (202) 205–6586*

PCIE/ECIE Liaison—Robert F. Fisher (202) 205–6583

Peter L. McClintock, Deputy Inspector General
Glenn P. Harris, Counsel to the Inspector General
Debra S. Ritt, Assistant Inspector General for Auditing
Daniel J. O'Rourke, Assistant Inspector General for Investigations
Robert F. Fisher, Assistant Inspector General for Management and Policy

**Social Security Administration**

*Phone Number: (410) 966–8385*

PCIE/ECIE Liaison—Jonathan Lasher (410) 965–7178

Steven L. Schaeffer, Assistant Inspector General for Audit
Richard A. Rohde, Acting Assistant Inspector General for Investigations

Jonathan Lasher, Counsel to the Inspector General

**United States Postal Service**

*Phone Number: (703) 248–2100*

PCIE/ECIE Liaison—Agapi Doulaveris (703) 248–2286

Vacant, Deputy Inspector General
Elizabeth Martin, Assistant Inspector General, General Counsel
Gladis Griffith, Deputy Assistant Inspector General, General Counsel
Ron Stith, Assistant Inspector General, Mission Support
Mary Demory, Deputy Assistant Inspector General for Mission Support
David Sidransky, Chief Information Officer
Timothy Barry, Assistant Inspector General for Investigations
Lance Carrington, Deputy Assistant Inspector General for Investigations—Field Operations
LaVan Griffith, Deputy Assistant Inspector General for Headquarters
Gordon Milbourn, Assistant Inspector General for Audits
Robert Batta, Deputy Assistant Inspector General for Mission Operations
John Cihota, Deputy Assistant Inspector General for Audits—Financial Accountability
Darrell Benjamin, Deputy Assistant Inspector General for Audits—Support Operations
Tammy Whitcomb, Deputy Assistant Inspector General for Audits—Revenue and Systems

Dated: September 11, 2008.

**Thomas R. Moyle,**

*Acting Assistant Inspector General, Department of Interior and Chair, Human Resources Committee, PCIE.*

[FR Doc. E8–21660 Filed 9–16–08; 8:45 am]

BILLING CODE 3110–01–P

## DEPARTMENT OF JUSTICE

### Notice of Lodging of Consent Decree Under the Clean Air Act

In accordance with Departmental policy, 28 CFR 50.7, notice is hereby given that on September 8, 2008, a proposed consent decree (''Consent Decree'') in *United States* v. *St. Marys Cement Inc. (U.S.) and St. Barbara Cement Inc.,* Civil Action No. 3:08–CV–50199, was lodged with the United States District Court for the Northern District of Illinois, Western Division.

In this action, brought against St. Marys Cement Inc. (U.S.) and St. Barbara Cement Inc. (''collectively ''Defendants'') pursuant to sections 113(b) and 167 of the Clean Air Act (''the Act''), 42 U.S.C. 7413(b) and 7477, the United States has sought injunctive relief and the assessment of civil penalties for violations of the Prevention of Significant Deterioration (''PSD'') provisions of the Act, 42 U.S.C. 7470–92, and the PSD regulations incorporated into the federally approved and enforceable Illinois State Implementation Plan (''the SIP'') at a Portland cement plant located in or near Dixon, Illinois (''Facility''). The United States' complaint alleges, among other things, that the Facility's prior owner and/or operator, CEMEX Central Plains Cement LLC (''CEMEX''), conducted a major modification of the Facility and that thereafter CEMEX and the Defendants, after they became the owner (St. Barbara Cement Inc.) and operator (St. Marys Cement Inc. (U.S.)) of the Facility, operated the Facility as modified without obtaining a PSD permit authorizing the major modification and without installing the best available technology to control emissions of nitrogen oxides (''$NO_X$''), as required by the Act and the SIP.

The proposed consent decree would resolve the civil claims of the United States alleged in the complaint and in a Notice of Violation and Finding of Violation and a Notice of Violation issued by the U.S. Environmental Protection Agency, as well as any civil liability of CEMEX's successor for these same violations. The proposed consent decree would require, among other things, that the Defendants: Have installed emission controls (selective non-catalytic reduction) at three of the Facility's kilns and achieve specified $NO_X$ emission limits by April 30, 2009; permanently retire a fourth kiln; install $NO_X$ continuous emissions monitoring systems to measure $NO_X$ emissions at the Facility's kilns; apply for appropriate permits or permit modifications to incorporate various requirements of the consent decree; and pay a civil penalty to the United States in the amount of $800,000.00. If the Defendants elect to build a new kiln to replace the retired kiln, the proposed consent decree establishes specific limitations and conditions governing the use of any $NO_X$ emission credits from the shutdown of the kiln, including specific requirements that would apply to any new kiln.

The Department of Justice will receive, for a period of thirty (30) days from the date of this publication, comments relating to the consent decree. Comments should be addressed to the Assistant Attorney General, Environment and Natural Resources Division, and either e-mailed to *pubcomment-ees@usdoj.gov* or mailed to P.O. Box 7611, United States Department of Justice, Washington, DC 20044–7611, and should refer to *United States* v. *St. Marys Cement Inc. and St. Barbara Cement Inc.*, D.J. Ref. 90–5–2–1–08782.

The consent decree may be examined at the Office of the United States Attorney, 308 West State Street, Suite 300, Rockford, Illinois 61101. During the public comment period, the consent decree may also be examined on the following Justice Department Web site: *http://www.usdoj.gov/enrd/Consent_Decrees.html.* A copy of the consent decree may also be obtained by mail from the Consent Decree Library, P.O. Box 7611, U.S. Department of Justice, Washington, DC 20044–7611 or by faxing or e-mailing a request to Tonia Fleetwood (*tonia.fleetwood@usdoj.gov*), fax no. (202) 514–0097, phone confirmation number (202) 514–1547. In requesting a copy from the Consent Decree Library, please enclose a check in the amount of $12.00 (25 cents per page reproduction cost) payable to the U.S. Treasury or, if by e-mail or fax, forward a check in that amount to the Consent Decree Library at the stated address.

**William D. Brighton,**

*Assistant Chief, Environmental Enforcement Section, Environment and Natural Resources Division.*

[FR Doc. E8–21638 Filed 9–16–08; 8:45 am]

BILLING CODE 4410–15–P

## DEPARTMENT OF LABOR

### Office of the Secretary

### Submission for OMB Review: Comment Request

September 10, 2008.

The Department of Labor (DOL) hereby announces the submission of the following public information collection request (ICR) to the Office of Management and Budget (OMB) for review and approval in accordance with the Paperwork Reduction Act of 1995 (Pub. L. 104–13, 44 U.S.C. chapter 35). A copy of this ICR, with applicable supporting documentation; including among other things a description of the likely respondents, proposed frequency of response, and estimated total burden may be obtained from the RegInfo.gov Web site at *http://www.reginfo.gov/public/do/PRAMain* or by contacting Darrin King on 202–693–4129 (this is not a toll-free number)/e-mail: *DOL_PRA_PUBLIC@dol.gov*.

Interested parties are encouraged to send comments to the Office of Information and Regulatory Affairs, Attn: OMB Desk Officer for the

Occupational Safety and Health Administration (OSHA), Office of Management and Budget, Room 10235, Washington, DC 20503, Telephone: 202–395–7316/Fax: 202–395–6974 (these are not toll-free numbers), e-mail: *OIRA_submission@omb.eop.gov* within 30 days from the date of this publication in the **Federal Register**. In order to ensure the appropriate consideration, comments should reference the OMB Control Number (see below).

The OMB is particularly interested in comments which:

- Evaluate whether the proposed collection of information is necessary for the proper performance of the functions of the agency, including whether the information will have practical utility;
- Evaluate the accuracy of the agency's estimate of the burden of the proposed collection of information, including the validity of the methodology and assumptions used;
- Enhance the quality, utility, and clarity of the information to be collected; and
- Minimize the burden of the collection of information on those who are to respond, including through the use of appropriate automated, electronic, mechanical, or other technological collection techniques or other forms of information technology, e.g., permitting electronic submission of responses.

*Agency:* Occupational Safety and Health Administration.

*Type of Review:* Extension without change of a previously approved collection.

*Title of Collection:* Onsite Consultation Agreements (29 CFR part 1908).

*OMB Control Number:* 1218–0110.

*Form Number:* OSHA Form 33.

*Affected Public:* State, Local, or Tribal Governments and Private Sector.

*Estimated Number of Respondents:* 27,854.

*Estimated Total Annual Burden Hours:* 231,207.

*Estimated Total Annual Costs Burden:* $0.

*Description:* OSHA's On-Site Consultation Service offers free and confidential advice to small and medium-sized businesses in all states across the country, with priority given to high-hazard worksites. Consultation services are completely separate from enforcement and do not result in penalties or citations. The Consultation Program regulations at 29 CFR part 1908 specify services to be provided, and practices and procedures to be followed by the State On-site Consultation Programs. Information collection requirements set forth in the On-site Consultation Program regulations are in two categories: State Responsibilities and Employer Responsibilities. For additional information, see related 60-day preclearance notice published in the **Federal Register** at 73 FR 36905 on June 30, 2008. PRA documentation prepared in association with the preclearance notice is available on *http://www.regulations.gov* under docket number OSHA 2008–0019.

**Darrin A. King,**

*Departmental Clearance Officer.*

[FR Doc. E8–21645 Filed 9–16–08; 8:45 am]

**BILLING CODE 4510–26–P**

## NATIONAL ARCHIVES AND RECORDS ADMINISTRATION

### Agency Information Collection Activities: Proposed Collection; Comment Request

**AGENCY:** National Archives and Records Administration (NARA).

**ACTION:** Notice.

**SUMMARY:** NARA is giving public notice that the agency proposes to request use of four (4) National Archives Trust Fund forms that will be used by individuals who wish to purchase copies of pages from Bankruptcy Cases (NATF 90), Civil Cases (NATF 91), Criminal Cases (NATF 92); and Court of Appeals Cases (NATF 93). The public is invited to comment on the proposed information collection pursuant to the Paperwork Reduction Act of 1995.

**DATES:** Written comments must be received on or before November 17, 2008 to be assured of consideration.

**ADDRESSES:** Comments should be sent to: Paperwork Reduction Act Comments (NHP), Room 4400, National Archives and Records Administration, 8601 Adelphi Rd, College Park, MD 20740–6001; or faxed to 301–713–7409; or electronically mailed to *tamee.fechhelm@nara.gov.*

**FOR FURTHER INFORMATION CONTACT:** Requests for additional information or copies of the proposed information collection and supporting statement should be directed to Tamee Fechhelm at telephone number 301–837–1694, or fax number 301–713–7409.

**SUPPLEMENTARY INFORMATION:** Pursuant to the Paperwork Reduction Act of 1995 (Pub. L. 104–13), NARA invites the general public and other Federal agencies to comment on proposed information collections. The comments and suggestions should address one or more of the following points: (a) Whether the proposed information collection is necessary for the proper performance of the functions of NARA; (b) the accuracy of NARA's estimate of the burden of the proposed information collection; (c) ways to enhance the quality, utility, and clarity of the information to be collected; and (d) ways, including the use of information technology, to minimize the burden of the collection of information on respondents; and (e) whether small businesses are affected by this collection. The comments that are submitted will be summarized and included in the NARA request for Office of Management and Budget (OMB) approval. All comments will become a matter of public record. In this notice, NARA is soliciting comments concerning the following information collection:

*Title:* Order Forms for U.S. Court Records in the National Archives.

*OMB number:* 3095–0063.

*Agency form number:* NATF Forms 90, 91, 92, and 93.

*Type of review:* Regular.

*Affected public:* Individuals or households.

*Estimated number of respondents:* 74,513.

*Estimated time per response:* 10 minutes.

*Frequency of response:* On occasion.

*Estimated total annual burden hours:* 12,419 hours.

*Abstract:* Submission of requests on a form is necessary to handle in a timely fashion the volume of requests received for these records (approximately 69,447 per year for the NATF 90, approximately 1,600 per year for the NATF 91, approximately 3,247 per year for the NATF 92, approximately 219 per year for the NATF 93) and the need to obtain specific information from the researcher to search for the records sought. As a convenience, the form will allow researchers to provide credit card information to authorize billing and expedited mailing of the copies. Researchers can also use Order Online! (*https://eservices.archives.gov/orderonline/*) to complete the forms and order the copies.

Dated: September 11, 2008.

**Martha Morphy,**

*Assistant Archivist for Information Services.*

[FR Doc. E8–21749 Filed 9–16–08; 8:45 am]

**BILLING CODE 7515–01–P**

## NATIONAL ARCHIVES AND RECORDS ADMINISTRATION

### Information Security Oversight Office

### Public Interest Declassification Board (PIDB); Notice of Meeting

Pursuant to Section 1102 of the Intelligence Reform and Terrorism Prevention Act of 2004 which extended and modified the Public Interest Declassification Board (PIDB) as established by the Public Interest Declassification Act of 2000 (Pub. L. 106–567, title VII, December 27, 2000, 114 Stat. 2856), announcement is made for the following committee meeting:

*Name of Committee:* Public Interest Declassification Board (PIDB).

*Date of Meeting:* Saturday, September 27, 2008.

*Time of Meeting:* 9:30 a.m. to 11:30 a.m.

*Place of Meeting:* National Archives and Records Administration, 700 Pennsylvania Avenue, NW., Room 105, Washington, DC 20408.

*Purpose:* To discuss declassification program issues.

This meeting will be open to the public. However, due to space limitations and access procedures, the name and telephone number of individuals planning to attend must be submitted to the Information Security Oversight Office (ISOO) no later than Wednesday, September 24, 2008. ISOO will provide additional instructions for gaining access to the location of the meeting.

*For Further Information Contact:* Julie A. Agurkis, PIDB Staff, Information Security Oversight Office, National Archives Building, 700 Pennsylvania Avenue, NW., Washington, DC 20408, telephone number (202) 357–5308.

Dated: September 10, 2008.

**William J. Bosanko,**

*Director, Information Security Oversight Office.*

[FR Doc. E8–21713 Filed 9–16–08; 8:45 am]

BILLING CODE 7515–01–P

## NATIONAL COUNCIL ON DISABILITY (NCD)

### Sunshine Act Meetings

**TYPE:** Quarterly Meeting.

**DATES AND TIMES:**

October 6, 2008, 8:30 a.m.–5 p.m.
October 7, 2008, 8:30 a.m.–5 p.m.
October 8, 2008, 8:30 a.m.–11 a.m.

**LOCATION:** Hyatt Regency Crown Center, 2345 McGee Street, Kansas City, Missouri.

**STATUS:**

October 6, 2008, 8:30 a.m.–5 p.m.—Open.
October 7, 2008, 8:30 a.m.–4 p.m.—Open.
October 7, 2008, 4:00 p.m.–5 p.m.—Closed Executive Session.
October 8, 2008, 8:30 a.m.–11 a.m.—Open.

**AGENDA:** Public Comment Sessions; Discussions on Emergency Preparedness, Vocational Rehabilitation, Veterans, Healthcare; NCD's Progress Report, Reports from the Chairperson, Council Members, and the Executive Director; Unfinished Business; New Business; Announcements; Adjournment.

**SUNSHINE ACT MEETING CONTACT:** Mark S. Quigley, Director of External Affairs, NCD, 1331 F Street, NW., Suite 850, Washington, DC 20004; 202–272–2004 (voice), 202–272–2074 (TTY), 202–272–2022 (fax).

**ACCOMMODATIONS:** Those needing reasonable accommodations should notify NCD immediately.

Dated: September 10, 2008.

**Michael C. Collins,**

*Executive Director.*

[FR Doc. E8–21858 Filed 9–15–08; 4:15 pm]

BILLING CODE 6820–MA–P

## NUCLEAR REGULATORY COMMISSION

**[Docket No. 040–06394]**

### Notice of Consideration of Amendment Request for Decommissioning of the Department of the Army, U.S. Army Research, Development and Engineering Command, Army Research Laboratory, Aberdeen Proving Ground, MD and Opportunity To Request a Hearing

**AGENCY:** Nuclear Regulatory Commission.

**ACTION:** Notice of amendment request and opportunity to request a hearing.

**DATES:** A request for a hearing must be filed by November 17, 2008.

**FOR FURTHER INFORMATION CONTACT:** Betsy Ullrich, Senior Health Physicist, Commercial and R&D Branch, Division of Nuclear Materials Safety, Region I, U.S. Nuclear Regulatory Commission, King of Prussia, PA 19406. Telephone: (610) 337–5040; fax number: (610) 337–5269; or e-mail: *Elizabeth.Ullrich@nrc.gov.*

**SUPPLEMENTARY INFORMATION:**

#### I. Introduction

The Nuclear Regulatory Commission (NRC) is considering issuance of a license amendment to Source Material License No. SMB–141 issued to the Department of the Army, U.S. Army Research, Development and Engineering Command, Army Research Laboratory (the Licensee), to authorize decommissioning of its Army Research Laboratory (ARL) Building 1103A Area (the Facility) at the Aberdeen Proving Ground, Maryland, under the Licensee's Decommissioning Plan (DP).

An NRC administrative review, documented in a letter to the Army Research Laboratory dated August 5, 2008, found the DP acceptable to begin a technical review.

If the NRC approves the DP, the approval will be documented in an amendment to NRC License No. SMB–141. However, before approving the proposed amendment, the NRC will need to make the findings required by the Atomic Energy Act of 1954, as amended, and NRC's regulations. These findings will be documented in a Safety Evaluation Report and an Environmental Assessment and/or an Environmental Impact Statement. The license will be amended to authorize release of the Facility for unrestricted use if this amendment is approved following completion of decommissioning activities and verification by the NRC that the radiological criteria for license termination have been met.

#### II. Opportunity To Request a Hearing

The NRC hereby provides notice that this is a proceeding on an application for a license amendment regarding the decommissioning of Building 1103A Area. Any person whose interest may be affected by this proceeding, and who desires to participate as a party, must file a request for a hearing and a specification of the contentions which the person seeks to have litigated in the hearing, in accordance with the NRC E-Filing rule, which the NRC promulgated in August 2007 (72 FR 49139, Aug. 28, 2007). The E-Filing rule requires participants to submit and serve documents over the Internet or in some cases to mail copies on electronic storage media. Participants may not submit paper copies of their filings unless they seek a waiver in accordance with the procedures described below.

To comply with the procedural requirements of E-Filing, at least ten (10) days prior to the filing deadline, the petitioner/requester must contact the Office of the Secretary by e-mail at *HEARINGDOCKET@NRC.GOV,* or by calling (301) 415–1677, to request (1) a digital ID certificate, which allows the participant (or its counsel or representative) to digitally sign documents and access the E-Submittal server for any proceeding in which it is participating; and/or (2) creation of an electronic docket for the proceeding (even in instances in which the petitioner/requester (or its counsel or

representative) already holds an NRC-issued digital ID certificate). Each petitioner/requester will need to download the Workplace Forms Viewer™ to access the Electronic Information Exchange (EIE), a component of the E-Filing system. The Workplace Forms Viewer™ is free and is available at *http://www.nrc.gov/site-help/e-submittals/install-viewer.html*. Information about applying for a digital ID certificate is available on NRC's public Web site at *http://www.nrc.gov/sitehelp/e-submittals/apply-certificates.html*.

Once a petitioner/requester has obtained a digital ID certificate, had a docket created, and downloaded the EIE viewer, it can then submit a request for hearing or petition for leave to intervene. Submissions should be in Portable Document Format (PDF) in accordance with NRC guidance available on the NRC public Web site at *http://www.nrc.gov/site-help/e-submittals.html*. A filing is considered complete at the time the filer submits its documents through EIE. To be timely, an electronic filing must be submitted to the EIE system no later than 11:59 p.m. Eastern Time on the due date. Upon receipt of a transmission, the E-Filing system time-stamps the document and sends the submitter an e-mail notice confirming receipt of the document. The EIE system also distributes an e-mail notice that provides access to the document to the NRC Office of the General Counsel and any others who have advised the Office of the Secretary that they wish to participate in the proceeding, so that the filer need not serve the documents on those participants separately. Therefore, applicants and other participants (or their counsel or representative) must apply for and receive a digital ID certificate before a hearing request/petition to intervene is filed so that they can obtain access to the document via the E-Filing system.

A person filing electronically may seek assistance through the ''Contact Us'' link located on the NRC Web site at *http://www.nrc.gov/site-help/e-submittals.html* or by calling the NRC technical help line, which is available between 8:30 a.m. and 4:15 p.m., Eastern Time, Monday through Friday. The help line number is (800) 397–4209 or locally, (301) 415–4737.

Participants who believe that they have a good cause for not submitting documents electronically must file a motion, in accordance with 10 CFR 2.302(g), with their initial paper filing requesting authorization to continue to submit documents in paper format. Such filings must be submitted by: (1) First class mail addressed to the Office of the Secretary of the Commission, U.S. Nuclear Regulatory Commission, Washington, DC 20555–0001, Attention: Rulemaking and Adjudications Staff; or (2) courier, express mail, or expedited delivery service to the Office of the Secretary, Sixteenth Floor, One White Flint North, 11555 Rockville, Pike, Rockville, Maryland 20852, Attention: Rulemaking and Adjudications Staff. Participants filing a document in this manner are responsible for serving the document on all other participants. Filing is considered complete by first-class mail as of the time of deposit in the mail, or by courier, express mail, or expedited delivery service upon depositing the document with the provider of the service.

Non-timely requests and/or petitions and contentions will not be entertained absent a determination by the Commission, the presiding officer, or the Atomic Safety and Licensing Board that the petition and/or request should be granted and/or the contentions should be admitted based on a balancing of the factors specified in 10 CFR 2.309(c)(1)(i)–(c)(1)(viii). To be timely, filings must be submitted no later than 11:59 p.m. Eastern Time on the due date.

Documents submitted in adjudicatory proceedings will appear in NRC's electronic hearing docket which is available to the public at *http://ehd.nrc.gov/EHD_Proceeding/home.asp*, unless excluded pursuant to an order of the Commission, an Atomic Safety and Licensing Board, or a Presiding Officer. Participants are requested not to include Social Security numbers in their filings. With respect to copyrighted works, except for limited excerpts that serve the purpose of the adjudicatory filings and would constitute a Fair Use application, participants are requested not to include copyrighted materials in their submission.

The formal requirements for documents contained in 10 CFR 2.304(c)–(e) must be met. If the NRC grants an electronic document exemption in accordance with 10 CFR 2.302(g)(3)), then the requirements for paper documents, set forth in 10 CFR 2.304(b) must be met.

In accordance with 10 CFR 2.309(b), a request for a hearing must be filed by November 17, 2008.

In addition to meeting other applicable requirements of 10 CFR 2.309, the general requirements involving a request for a hearing filed by a person other than an applicant must state:

1. The name, address, and telephone number of the requester;

2. The nature of the requester's right under the Act to be made a party to the proceeding;

3. The nature and extent of the requester's property, financial, or other interest in the proceeding;

4. The possible effect of any decision or order that may be issued in the proceeding on the requester's interest; and

5. The circumstances establishing that the request for a hearing is timely in accordance with 10 CFR 2.309(b).

In accordance with 10 CFR 2.309(f)(1), a request for hearing or petitions for leave to intervene must set forth with particularity the contentions sought to be raised. For each contention, the request or petition must:

1. Provide a specific statement of the issue of law or fact to be raised or controverted;

2. Provide a brief explanation of the basis for the contention;

3. Demonstrate that the issue raised in the contention is within the scope of the proceeding;

4. Demonstrate that the issue raised in the contention is material to the findings that the NRC must make to support the action that is involved in the proceeding;

5. Provide a concise statement of the alleged facts or expert opinions which support the requester's/petitioner's position on the issue and on which the requester/petitioner intends to rely to support its position on the issue; and

6. Provide sufficient information to show that a genuine dispute exists with the applicant on a material issue of law or fact. This information must include references to specific portions of the DP that the requester/petitioner disputes and the supporting reasons for each dispute, or, if the requester/petitioner believes the application fails to contain information on a relevant matter as required by law, the identification of each failure and the supporting reasons for the requester's/petitioner's belief.

Requesters/petitioners should, when possible, consult with each other in preparing contentions and combine similar subject matter concerns into a joint contention, for which one of the co-sponsoring requesters/petitioners is designated the lead representative. Further, in accordance with 10 CFR 2.309(f)(3), any requester/petitioner that wishes to adopt a contention proposed by another requester/petitioner must do so, in accordance with the E-Filing rule, within ten days of the date the contention is filed, and designate a representative who shall have the authority to act for the requester/petitioner.

In accordance with 10 CFR 2.309(g), a request for hearing and/or petition for leave to intervene may also address the selection of the hearing procedures, taking into account the provisions of 10 CFR 2.310.

### III. Further Information

Documents related to this action, including the application for amendment and supporting documentation, are available electronically at the NRC's Electronic Reading Room at *http://www.nrc.gov/reading-rm/adams.html.* From this site, you can access the NRC's Agencywide Document Access and Management System (ADAMS), which provides text and image files of NRC's public documents. The ADAMS accession numbers for the documents related to this notice are:

| | |
|---|---|
| Submittal Letter dated May 19, 2008 | ML081550532 |
| Building 1103A Area DP, Rev. 0 | ML081550541 |
| Building 1103A Area DP Rev. 0, App. A, License No. SMB–141 | ML081550549 |
| Building 1103A Area DP Rev. 0, App. B, Characterization Report | ML081550553 |
| Building 1103A Area DP Rev. 0, App. C, Determination of DCGLs | ML081550557 |
| Building 1103A Area DP Rev. 0, App. D, Final Status Survey Plan | ML081550561 |

If you do not have access to ADAMS or if there are problems in accessing the documents located in ADAMS, contact the NRC Public Document Room (PDR) Reference staff at 1–800–397–4209, 301–415–4737, or by e-mail to *pdr.resource@nrc.gov.* These documents may also be viewed electronically on the public computers located at the NRC's PDR, O 1 F21, One White Flint North, 11555 Rockville Pike, Rockville, MD 20852. The PDR reproduction contractor will copy documents for a fee.

Dated at Region I, 475 Allendale Road, King of Prussia, PA, this 10th day of September, 2008.

For the Nuclear Regulatory Commission.

**James P. Dwyer,**

*Chief, Commercial and R&D Branch,Division of Nuclear Materials Safety,Region I.*

[FR Doc. E8–21655 Filed 9–16–08; 8:45 am]

**BILLING CODE 7590–01–P**

## NUCLEAR REGULATORY COMMISSION

**[Docket No. 030–16045]**

## Notice of Availability of Environmental Assessment and Finding of No Significant Impact for License Amendment Request to Byproduct Materials License 45–09599–01 for the Old Dominion University, Norfolk, VA

**AGENCY:** Nuclear Regulatory Commission.

**ACTION:** Issuance of Environmental Assessment and Finding of No Significant Impact for License Amendment.

**FOR FURTHER INFORMATION CONTACT:** Thomas Thompson, Senior Health Physicist, Commercial and R&D Branch, Division of Nuclear Materials Safety, Region I, 475 Allendale Road, King of Prussia, PA 19406. Telephone: (610) 337–5303; fax number: (610) 337–5269; e-mail: *TKT@nrc.gov.*

**SUPPLEMENTARY INFORMATION:**

### I. Introduction

The U.S. Nuclear Regulatory Commission (NRC) is considering the issuance of a license renewal to Materials License No. 45–09599–01. This license is held by Old Dominion University (Licensee) in Norfolk, Virginia. As part of its license renewal, the Licensee has requested an exemption from the requirement in 10 CFR 30.32(g) to list sealed sources by their manufacturer and model number as registered under the provisions of 10 CFR 32.210. The Licensee requested this exemption in a letter dated December 13, 2005. The NRC has prepared an Environmental Assessment (EA) in support of this proposed action in accordance with the requirements of Title 10, Code of Federal Regulations (CFR), Part 51 (10 CFR Part 51). Based on the EA, the NRC has concluded that a Finding of No Significant Impact (FONSI) is appropriate with respect to the proposed action. The license renewal, including the approval of the exemption request, will be issued to the Licensee following the publication of this FONSI and EA in the **Federal Register**.

### II. Environmental Assessment

*Identification of Proposed Action*

The proposed action would renew License No. 45–09599–01, including approval of the Licensee's request for exemption submitted on December 13, 2005. License No. 45–09599–01 was issued on September 11, 1979, pursuant to 10 CFR Parts 30, 40, and 70, and has been amended periodically since that time. This license authorized the Licensee for research and development as defined in 10 CFR 30.4, animal studies, teaching and training of students, and calibration and checking of the licensee's instruments.

On October 11, 2005, the Licensee submitted its renewal application for License No. 45–09599–01. In a letter dated December 13, 2005, submitted in response to an inquiry from the NRC, the Licensee requested an exemption from the requirement in 10 CFR 30.32(g) to list sealed sources by their manufacturer and model number as registered under the provisions of 10 CFR 32.210. In requesting this exemption, the Licensee stated that one of the sources in its inventory is a custom-made encapsulated sealed source containing 60 mCi of Eu–155 which has been in its possession since 1982 and has no model number.

*Need for the Proposed Action*

The licensee has possessed and used this custom source safely for many years. This exemption is needed to authorize the Licensee to continue to possess this source.

*Technical Analysis of the Proposed Action*

10 CFR 30.11(a) states that the Commission may grant such exemptions from the requirements of the regulations as it determines are authorized by law and will not endanger life or property or the common defense and security and are otherwise in the public interest. The NRC staff has analyzed the Licensee's request to be authorized to receive and take possession of sealed sources and devices which have not been registered with the NRC under 10 CFR 32.210 or with an Agreement State. The NRC staff considered that the Licensee is qualified by sufficient training and experience and has sufficient facilities and equipment to handle these sources and devices. Furthermore, NRC inspections have evaluated the Licensee's performance and determined that the Licensee has safely handled this unregistered source for many years. Accordingly, the NRC staff has concluded that granting this exemption is authorized by law, will not endanger life or property or the common defense and security, and is in the public interest.

*Environmental Impacts of the Proposed Action*

The proposed action is largely administrative in nature. Approving this exemption will have no environmental impact.

*Environmental Impacts of the Alternatives to the Proposed Action*

Due to the largely administrative nature of the proposed action, its environmental impacts are small. Additionally, denying the exemption request would result in no change in current environmental impacts. The environmental impacts of the proposed action and the no-action alternative are therefore similar, and the no-action alternative is accordingly not further considered.

*Conclusion*

The NRC staff has concluded that the proposed action will not significantly impact the quality of the human environment; the NRC staff concludes that the proposed action is the preferred alternative.

*Agencies and Persons Consulted*

The NRC staff has determined that the proposed action is of a procedural nature, and will not affect listed species or critical habitat. Therefore, no further consultation is required under Section 7 of the Endangered Species Act. The NRC staff has also determined that the proposed action is not the type of activity that has the potential to cause effects on historic properties. Therefore, no further consultation is required under Section 106 of the National Historic Preservation Act.

**III. Finding of No Significant Impact**

The NRC staff has prepared this EA in support of the proposed action. On the basis of this EA, the NRC finds that there are no significant environmental impacts from the proposed action, and that preparation of an environmental impact statement is not warranted. Accordingly, the NRC has determined that a Finding of No Significant Impact is appropriate.

**IV. Further Information**

Documents related to this action, including the application for exemption and supporting documentation, are available electronically at the NRC's Electronic Reading Room at *http://www.nrc.gov/reading-rm/adams.html.* From this site, you can access the NRC's Agencywide Document Access and Management System (ADAMS), which provides text and image files of NRC's public documents. The documents related to this action are listed below, along with their ADAMS accession numbers.

1. Licensee letter dated December 13, 2005 [ML053530318]

If you do not have access to ADAMS, or if there are problems in accessing the documents located in ADAMS, contact the NRC Public Document Room (PDR) Reference staff at 1–800–397–4209, 301–415–4737, or by e-mail to *pdr@nrc.gov.* These documents may also be viewed electronically on the public computers located at the NRC's PDR, O1 F21, One White Flint North, 11555 Rockville Pike, Rockville, MD 20852. The PDR reproduction contractor will copy documents for a fee.

Dated at Region I, 475 Allendale Road, King of Prussia this 10th day of September 2008.

For the Nuclear Regulatory Commission.

**James P. Dwyer,**

*Chief, Commercial and R&D Branch, Division of Nuclear Materials Safety, Region I.*

[FR Doc. E8–21654 Filed 9–16–08; 8:45 am]

**BILLING CODE 7590–01–P**

## NUCLEAR REGULATORY COMMISSION

### Advisory Committee on Reactor Safeguards (ACRS); Subcommittee Meeting on Materials, Metallurgy & Reactor Fuels; Notice of Meeting

The ACRS Subcommittee on Materials, Metallurgy & Reactor Fuels will hold a meeting on October 1, 2008, at 11545 Rockville Pike, Rockville, Maryland, Room T–2B3.

The meeting will be open to public attendance.

The agenda for the subject meeting shall be as follows:

**Wednesday October 1, 2008—8:30 a.m.–5 p.m.**

The Subcommittee will receive a briefing on the proposed rule amendment to 10 CFR 50.61, ''Alternate Fracture Toughness Requirements for Protection Against Pressurized Thermal Shock Events.'' The Subcommittee will hear presentations by and hold discussions with representatives of the NRC staff and other interested persons regarding this matter. The Subcommittee will gather information, analyze relevant issues and facts, and formulate proposed positions and actions, as appropriate, for deliberation by the full Committee.

Members of the public desiring to provide oral statements and/or written comments should notify the Designated Federal Officer, Mr. Michael Benson (Telephone: 301–415–6396) 5 days prior to the meeting, if possible, so that appropriate arrangements can be made. Electronic recordings will be permitted only during those portions of the meeting that are open to the public. Detailed procedures for the conduct of and participation in ACRS meetings were published in the **Federal Register** on September 26, 2007 (72 FR 54695).

Further information regarding this meeting can be obtained by contacting the Designated Federal Official between 7 a.m. and 5 p.m. (ET). Persons planning to attend this meeting are urged to contact the above named individual at least two working days prior to the meeting to be advised of any potential changes to the agenda.

Dated: *September 9, 2008.*

**Cayetano Santos,**

*Chief, Reactor Safety Branch A, ACRS.*

[FR Doc. E8–21666 Filed 9–16–08; 8:45 am]

**BILLING CODE 7590–01–P**

## OFFICE OF MANAGEMENT AND BUDGET

### Compliance Assistance Resources and Points of Contact Available to Small Businesses

**AGENCY:** Office of Management and Budget, Executive Office of the President.

**ACTION:** Notice.

**SUMMARY:** In accordance with the Small Business Paperwork Relief Act of 2002 (44 U.S.C. 3520), the Office of Management and Budget (OMB) is publishing a ''list of the compliance assistance resources available to small businesses'' and a list of the points of contacts in agencies ''to act as a liaison between the agency and small business concerns'' with respect to the collection of information and the control of paperwork. This information is posted on the following Web site: *http://www.business.gov/contacts/federal/.*

**FOR FURTHER INFORMATION CONTACT:** Wendy Liberante, Office of Information and Regulatory Affairs, Office of Management and Budget; e-mail: *wliberante@omb.eop.gov*; telephone: (202) 395–3647. Inquiries may be submitted by facsimile to (202) 395–5167.

**SUPPLEMENTARY INFORMATION:** The Small Business Paperwork Relief Act of 2002 (Pub. L. 107–198) requires OMB to ''publish in the **Federal Register** and make available on the Internet (in consultation with the Small Business Administration) on an annual basis a list of the compliance assistance resources available to small businesses'' (44 U.S.C. 3504(c)(6)). OMB has, with the assistance and support of the Small Business Administration (SBA) and the Business Gateway Program, assembled a list of the compliance assistance resources available to small businesses. This list is available today on the

following Web site: *http://www.business.gov/contacts/federal/*. There is also a link to this information on the OMB Web site.

In addition, under another provision of this Act, ''each agency shall, with respect to the collection of information and the control of paperwork, establish 1 point of contact in the agency to act as a liaison between the agency and small business concerns'' (44 U.S.C. 3506(i)(1)). These contacts are also available at *http://www.business.gov/contacts/federal/*.

**Susan E. Dudley,**

*Administrator, Office of Information and Regulatory Affairs.*

[FR Doc. E8–21496 Filed 9–16–08; 8:45 am]

BILLING CODE 3110–01–P

## RAILROAD RETIREMENT BOARD

### Proposed Collection; Comment Request

**SUMMARY:** In accordance with the requirement of Section 3506(c)(2)(A) of the Paperwork Reduction Act of 1995 which provides opportunity for public comment on new or revised data collections, the Railroad Retirement Board (RRB) will publish periodic summaries of proposed data collections.

*Comments are invited on:* (a) Whether the proposed information collection is necessary for the proper performance of the functions of the agency, including whether the information has practical utility; (b) the accuracy of the RRB's estimate of the burden of the collection of the information; (c) ways to enhance the quality, utility, and clarity of the information to be collected; and (d) ways to minimize the burden related to the collection of information on respondents, including the use of automated collection techniques or other forms of information technology.

**Title and Purpose of Information Collection:**

*Continuing Disability Report; OMB 3220–0187*

Under Section 2 of the Railroad Retirement Act, an annuity is not payable or is reduced for any month in which the annuitant works for a railroad or earns more than prescribed dollar amounts from either non-railroad employment or self-employment. Certain types of work may indicate an annuitant's recovery from disability. The provisions relating to the reduction or non-payment of annuities by reasons of work and an annuitant's recovery from disability for work are prescribed in 20 CFR 220.17–220.20. The RRB conducts continuing disability reviews (CDR) to determine whether annuitants continue to meet the disability requirements of the law. Provisions relating to when and how often the RRB conducts CDRs are prescribed in 20 CFR 220.186.

Form G–254, Continuing Disability Report, is used by the RRB to develop information for CDR determinations, including determinations prompted by a report of work, return to railroad service, allegations of medical improvement, or routine disability call-up. The RRB proposes revision of an existing item to clarify information regarding the circumstances surrounding a disabled annuitant's self-employment.

Form G–254a, Continuing Disability Update Report, is used to help identify disability annuitants whose work activity and/or recent medical history warrants a more extensive review and thus completion of Form G–254. The RRB proposes no changes to Form G–254a.

One response is requested of each respondent to Form G–254 and G–254a. Completion is required to retain a benefit.

ESTIMATE OF ANNUAL RESPONDENT BURDEN

(The estimated annual respondent burden is as follows)

| Form #(s) | Annual responses | Time (Min) | Burden (Hrs) |
|---|---|---|---|
| G–254 | 1,500 | 5–35 | 623 |
| G–254a | 1,500 | 5 | 125 |

*Additional Information or Comments:* To request more information or to obtain a copy of the information collection justification, forms, and/or supporting material, please call the RRB Clearance Officer at (312) 751–3363 or send an e-mail request to *Charles.Mierzwa@RRB.GOV*. Comments regarding the information collection should be addressed to Ronald J. Hodapp, Railroad Retirement Board, 844 North Rush Street, Chicago, Illinois 60611–2092 or send an e-mail to *Ronald.Hodapp@RRB.GOV*. Written comments should be received within 60 days of this notice.

**Charles Mierzwa,**

*Clearance Officer.*

[FR Doc. E8–21623 Filed 9–16–08; 8:45 am]

BILLING CODE 7905–01–P

## SECURITIES AND EXCHANGE COMMISSION

**[File No. 500–1]**

### In the Matter of B.B. Walker Co., Bellatrix International, Inc., Belmont Resources, Inc., Beres Industries, Inc., Best Products Co., Inc., Bethlehem Corp., and Bogue Electric Manufacturing Co. (n/k/a Bogue International, Inc.); Order of Suspension of Trading

September 15, 2008.

It appears to the Securities and Exchange Commission that there is a lack of current and accurate information concerning the securities of B.B. Walker Co. because it has not filed any periodic reports since the period ended August 4, 2001.

It appears to the Securities and Exchange Commission that there is a lack of current and accurate information concerning the securities of Bellatrix International, Inc. because it has not filed any periodic reports since the period ended December 31, 1995.

It appears to the Securities and Exchange Commission that there is a lack of current and accurate information concerning the securities of Belmont Resources, Inc. because it has not filed any periodic reports since the period ended January 31, 2001.

It appears to the Securities and Exchange Commission that there is a lack of current and accurate information concerning the securities of Beres Industries, Inc. because it has not filed any periodic reports since the period ended December 31, 2002.

It appears to the Securities and Exchange Commission that there is a lack of current and accurate information concerning the securities of Best Products Co., Inc. because it has not

filed any periodic reports since the period ended November 2, 1996.

It appears to the Securities and Exchange Commission that there is a lack of current and accurate information concerning the securities of Bethlehem Corp. because it has not filed any periodic reports since the period ended February 28, 2001.

It appears to the Securities and Exchange Commission that there is a lack of current and accurate information concerning the securities of Bogue Electric Manufacturing Co. (n/k/a Bogue International, Inc.) because it has not filed any periodic reports since the period ended September 30, 1998.

The Commission is of the opinion that the public interest and the protection of investors require a suspension of trading in the securities of the above-listed companies.

*Therefore, it is ordered,* pursuant to Section 12(k) of the Securities Exchange Act of 1934, that trading in the securities of the above-listed companies is suspended for the period from 9:30 a.m. EDT on September 15, 2008, through 11:59 p.m. EDT on September 26, 2008.

By the Commission.

**Jill M. Peterson,**

*Assistant Secretary.*

[FR Doc. E8–21830 Filed 9–15–08; 4:15 pm]

**BILLING CODE 8010–01–P**

## SECURITIES AND EXCHANGE COMMISSION

**[Release No. 34–58521; File No. SR–BATS–2008–002]**

## Self-Regulatory Organizations; BATS Exchange, Inc.; Notice of Filing of Proposed Rule Change To Amend BATS Rule 11.5, entitled ''Orders and Modifiers,'' To Provide for a New Order Type—Modified Directed Intermarket Sweep Order

September 11, 2008.

Pursuant to Section 19(b)(1) of the Securities Exchange Act of 1934 (''Act'')[1] and Rule 19b–4 thereunder,[2] notice is hereby given that on September 8, 2008, BATS Exchange, Inc. (''BATS'' or the ''Exchange'') filed with the Securities and Exchange Commission (''Commission'') the proposed rule change as described in Items I, II, and III below, which Items have been prepared by the Exchange. The Commission is publishing this notice to solicit comments on the proposed rule change from interested persons.

### I. Self-Regulatory Organization's Statement of the Terms of Substance of the Proposed Rule Change

The Exchange is proposing to amend BATS Rule 11.5, entitled ''Orders and Modifiers,'' to provide for a new order type, a Modified Directed Intermarket Sweep Order (''Modified Directed ISO'').

The text of the proposed rule change is available at the Exchange's Web site at *http://www.batstrading.com,* at the principal office of the Exchange, and at the Commission's Public Reference room.

### II. Self-Regulatory Organization's Statement of the Purpose of, and Statutory Basis for, the Proposed Rule Change

In its filing with the Commission, the Exchange included statements concerning the purpose of and basis for the proposed rule change and discussed any comments it received on the proposed rule change. The text of these statements may be examined at the places specified in Item IV below. The Exchange has prepared summaries, set forth in sections A, B, and C below, of the most significant parts of such statements.

*A. Self-Regulatory Organization's Statement of the Purpose of, and Statutory Basis for, the Proposed Rule Change*

1. Purpose

The purpose of the proposed rule change is to provide an additional order type to Users of the Exchange. The proposed new order type is a ''Modified Directed Intermarket Sweep Order'' (''Modified Directed ISO''). A Modified Directed ISO is an order that bypasses the System and is immediately routed by the Exchange as an IOC ISO to an away trading center specified by the User for execution, provided that the away trading center must be displaying a Protected Quotation, as that term is defined in the Exchange's rules. If the ISO is not executed in its entirety at the away trading center, the Modified Directed ISO returns to the Exchange as an IOC ISO and any portion not executed at the Exchange will be cancelled back to the User. It is the entering Member's responsibility, not the Exchange's responsibility, to comply with the requirements of Regulation NMS relating to Intermarket Sweep Orders.

The Exchange believes that Modified Directed ISO's will enhance order execution opportunities for Exchange Users by allowing such Users to route ISOs to a specified trading center, and if not executed in whole or in part at such trading center, to have their orders filled as ISOs on the BATS book if there is available liquidity at the Exchange to fill the order. Accordingly, the addition of a Modified Directed ISO order type to BATS Rule 11.5 promotes just and equitable principles of trade, removes impediments to, and perfects the mechanism of, a free and open market and a national market system.

2. Statutory Basis

The Exchange believes the proposal is consistent with the requirements of the Act and the rules and regulations thereunder that are applicable to a national securities exchange, and, in particular, with the requirements of Section 6(b).[3] In particular, for the reasons described above, the proposed change is consistent with Section 6(b)(5) of the Act, because it would promote just and equitable principles of trade, remove impediments to, and perfect the mechanism of, a free and open market and a national market system, and, in general, protect investors and the public interest.

*B. Self-Regulatory Organization's Statement on Burden on Competition*

The Exchange does not believe that the proposed rule change imposes any burden on competition.

*C. Self-Regulatory Organization's Statement on Comments on the Proposed Rule Change Received From Members, Participants or Others*

No written comments were solicited or received.

### III. Date of Effectiveness of the Proposed Rule Change and Timing for Commission Action

Within 35 days of the date of publication of this notice in the **Federal Register** or within such longer period (i) as the Commission may designate up to 90 days of such date if it finds such longer period to be appropriate and publishes its reasons for so finding, or (ii) as to which the Exchange consents, the Commission will:

(A) by order approve such proposed rule change; or

(B) institute proceedings to determine whether the proposed rule change should be disapproved.

### IV. Solicitation of Comments

Interested persons are invited to submit written data, views, and

[1] 15 U.S.C. 78s(b)(1).

[2] 17 CFR 240.19b–4.

[3] 15 U.S.C. 78(f)(b).

arguments concerning the foregoing, including whether the proposed rule change is consistent with the Act. Comments may be submitted by any of the following methods:

*Electronic Comments*

- Use the Commission's Internet comment form (*http://www.sec.gov/rules/sro.shtml*); or
- Send an e-mail to *rule-comments@sec.gov*. Please include File Number SR–BATS–2008–002 on the subject line.

*Paper Comments*

- Send paper comments in triplicate to Secretary, Securities and Exchange Commission, 100 F Street, NE., Washington, DC 20549–1090.

All submissions should refer to File Number SR–BATS–2008–002. This file number should be included on the subject line if e-mail is used. To help the Commission process and review your comments more efficiently, please use only one method. The Commission will post all comments on the Commission's Internet Web site (*http://www.sec.gov/rules/sro.shtml*). Copies of the submission, all subsequent amendments, all written statements with respect to the proposed rule change that are filed with the Commission, and all written communications relating to the proposed rule change between the Commission and any person, other than those that may be withheld from the public in accordance with the provisions of 5 U.S.C. 552, will be available for inspection and copying in the Commission's Public Reference Room, on official business days between the hours of 10 a.m. and 3 p.m. Copies of the filing also will be available for inspection and copying at the principal office of the Exchange. All comments received will be posted without change; the Commission does not edit personal identifying information from submissions. You should submit only information that you wish to make available publicly. All submissions should refer to File Number SR–BATS–2008–002 and should be submitted on or before October 8, 2008.

For the Commission, by the Division of Trading and Markets, pursuant to delegated authority.[4]

**Florence E. Harmon,**

*Acting Secretary.*

[FR Doc. E8–21708 Filed 9–16–08; 8:45 am]

**BILLING CODE 8010–01–P**

[4] 17 CFR 200.30–3(a)(12).

## SECURITIES AND EXCHANGE COMMISSION

**[Release No. 34–58509; File No. SR–NASDAQ–2008–025]**

## Self-Regulatory Organizations; The NASDAQ Stock Market LLC; Order Approving Proposed Rule Change, as Modified by Amendment No. 2 Thereto, To Establish a System for the Purchase of Equity Value Indicator Securities

September 10, 2008.

### I. Introduction

On March 20, 2008, The NASDAQ Stock Market LLC, (''Nasdaq'' or ''Exchange''), filed with the Securities and Exchange Commission (''Commission''), pursuant to Section 19(b)(1) of the Securities Act of 1934 (''Exchange Act'')[1] and Rule 19b–4 thereunder,[2] a proposed rule change to establish an Equity Value Indicator (''EVI'') Cross. On July 23, 2008, the Nasdaq filed Amendment No. 1 to the proposed rule change. On July 30, 2008, Nasdaq withdrew Amendment No. 1 and filed Amendment No. 2 to the proposed rule change.[3] On August 7, 2008, the proposed rule change, as modified by Amendment No. 2, was published for comment in the **Federal Register**.[4] The Commission received no comments on the proposed rule change. This order approves the proposed rule change, as modified by Amendment No. 2.

### II. Background

Nasdaq has proposed to establish a system that will allow its members to purchase ''EVI Securities,'' which Nasdaq anticipates will entitle holders thereof to specified payments based on the exercise of stock options previously granted to employees of the issuer. This system—designated by Nasdaq the ''EVI Cross''—is designed to generate a market-based value of employee stock options for purposes of FASB Statement of Financial Accounting Standards No. 123(R). EVI Securities will represent a payment obligation of the issuer, but will not represent any direct ownership interest in the issuing company or in the associated employee stock options. The issuer will make available to the public the number of EVI Securities available in the EVI Cross, the limit price (if any), and the terms and features of its EVI Securities, such as how payments are calculated, maturity dates, and form of payment.

Nasdaq is not proposing to list or provide a secondary market for EVI Securities. An issuer will be able to sell, and Nasdaq members will be able to buy, EVI Securities in a single auction. Nasdaq members would access the EVI Cross system through existing interfaces for order entry, although the EVI Cross system will be separate from the Nasdaq Market Center execution system. The EVI Cross system is modeled on the technology used for Nasdaq's existing crossing mechanisms such as its Opening and Closing Crosses, the Nasdaq Crossing Network, and its Halt Cross. Nasdaq anticipates that an issuer, if it chose to use the EVI Cross, would do so on the first trading day following the grant of employee stock options.

To initiate an auction, a Nasdaq member authorized to act on behalf of the issuer of EVI Securities would enter an order specifying a quantity of EVI Securities to sell; a limit price is optional. After 4 p.m. on the day of the auction, the sell order could not be modified but could be cancelled as late as 4:45 p.m. On the day of the auction, any Nasdaq member could submit a limit order to buy with a designated size. Beginning at 4 p.m. and periodically thereafter, Nasdaq would disseminate information about the anticipated execution price, which is the single highest price at which the maximum amount of interest could be paired. Based on this information, prospective buyers could submit new orders and potentially increase the anticipated execution price. Executions would occur at 5 p.m., unless the system extends the auction process because the anticipated execution price changes by a designated amount in the minute before the designated time of execution. If the remaining size of the sell order cannot fill all the buy orders at the execution price, allocations would be made based on time priority. All executions would be reported to the National Securities Clearing Corporation and disseminated via a data feed.

Nasdaq would charge an issuer tiered fees depending on the total value of the EVI offering. The fee would be 2 percent of the first $10,000,000 of the total value of an EVI offering. If the value of the EVI offering is above $10,000,000, Nasdaq would charge an additional fee of 1.5 percent of the value of the EVI offering above $10,000,000. The total fees, however, would not exceed $1,500,000. Nasdaq would not assess a fee if the EVI Cross is not carried out. Nasdaq members would be required to establish a new port for connectivity to access the EVI Cross system. However, Nasdaq

[1] 15 U.S.C. 78s(b)(1).

[2] 17 CFR 240.19b–4.

[3] Amendment No. 2 replaced the original filing in its entirety.

[4] *See* Securities Exchange Act Release No. 58275 (July 31, 2008), 73 FR 46129.

would not assess a fee for that port, and Nasdaq has not proposed to assess any transaction fees for purchases of EVI Securities.

## III. Discussion

After careful review, the Commission finds that the proposed rule change is consistent with the requirements of the Act and the rules and regulations thereunder applicable to a national securities exchange.[5] In particular, the Commission finds that the proposed rule change is consistent with Section 6(b)(5) of the Act,[6] which requires, among other things, that the rules of an exchange be designed to prevent fraudulent and manipulative acts and practices; to promote just and equitable principles of trade; to foster cooperation and coordination with persons engaged in regulating, clearing, settling, processing information with respect to, and facilitating transactions in securities; and, in general, to protect investors and the public interest; and are not designed to permit unfair discrimination between customers, issuers, brokers, or dealers. The proposal offers a potentially useful service to issuers and does not appear to raise any issue under the Exchange Act.

The Commission believes that the proposed trading rules are consistent with the Act and notes that they are based on those of Nasdaq's crossing platforms that have previously been approved by the Commission.[7] The Commission finds that the proposed fees for the EVI Cross are consistent with Section 6(b)(4) of the Act,[8] which requires that the rules of an exchange provide for the equitable allocation of reasonable dues, fees, and other charges among its members and issuers and other persons using its facilities. The Commission notes that an issuer will not be charged a fee unless an auction is carried out, and that Nasdaq has not proposed any transaction fees on members that purchase EVI Securities in an auction.

This order addresses only whether Nasdaq's rules and fees relating to the EVI Cross are consistent with the Act. The Commission is offering no opinion here as to whether prices of EVI Securities derived from auctions conducted pursuant to this proposal may be employed to value employee stock options consistent with FASB Statement of Financial Accounting Standards No. 123(R), or whether the offering of any particular EVI Securities is consistent with the federal securities laws.

## IV. Conclusion

*It is therefore ordered,* pursuant to Section 19(b)(2) of the Act,[9] that the proposed rule change (SR–NASDAQ–2008–025), as modified by Amendment No. 2, be, and hereby is, approved.

For the Commission, by the Division of Trading and Markets, pursuant to delegated authority.[10]

**Florence E. Harmon,**

*Acting Secretary.*

[FR Doc. E8–21705 Filed 9–16–08; 8:45 am]

**BILLING CODE 8010–01–P**

[5] In approving this proposed rule change, the Commission has considered the proposed rule's impact on efficiency, competition, and capital formation. *See* 15 U.S.C. 78c(f).

[6] 15 U.S.C. 78f(b)(5).

[7] *See, e.g.*, Securities Exchange Act Release No. 50405 (September 16, 2004), 69 FR 57118 (September 23, 2004) (SR–NASD–2007–071) (approving Nasdaq's Opening Cross); Securities Exchange Act Release No. 49406 (March 11, 2004), 69 FR 12879 (March 18, 2004) (SR–NASD–2003–173) (approving Nasdaq's Closing Cross); Securities Exchange Act Release No. 53687 (April 20, 2006), 71 FR 24878 (April 27, 2006) (SR–NASD–2006–015) (approving the Nasdaq Halt Cross); Securities Exchange Act Release No. 54101 (July 5, 2006), 71 FR 39382 (July 12, 2006) (SR–NASD–2005–140) (approving the Nasdaq Crossing Network).

[8] 15 U.S.C. 78f(b)(4).

[9] 15 U.S.C. 78s(b)(2).

[10] 17 CFR 200.30–3(a)(12).

---

## SECURITIES AND EXCHANGE COMMISSION

**[Release No. 34–58522; File No. SR–NYSE–2008–83]**

## Self-Regulatory Organizations; Notice of Filing and Immediate Effectiveness of Proposed Rule Change by New York Stock Exchange LLC To Resume the Operation of NYSE Rule 123D(3) With Respect to Trading in the Securities of Fannie Mae and Freddie Mac Beginning on September 11, 2008, Following the Suspension of That Rule Pursuant to SR–NYSE–2008–81

September 11, 2008.

Pursuant to Section 19(b)(1)[1] of the Securities Exchange Act of 1934 (the ''Act'')[2] and Rule 19b–4 thereunder,[3] notice is hereby given that, on September 11, 2008, New York Stock Exchange LLC (''NYSE'' or the ''Exchange'') filed with the Securities and Exchange Commission (the ''Commission'') the proposed rule change as described in Items I and II below, which Items have been prepared by the self-regulatory organization. The Commission is publishing this notice to solicit comments on the proposed rule change from interested persons.

### I. Self-Regulatory Organization's Statement of the Terms of Substance of the Proposed Rule Change

The Exchange proposes to resume the operation of NYSE Rule 123D(3) with respect to trading in the securities of Fannie Mae and Freddie Mac beginning on September 11, 2008, following the suspension of that rule pursuant to SR–NYSE–2008–81.[4]

### II. Self-Regulatory Organization's Statement of the Purpose of, and Statutory Basis for, the Proposed Rule Change

In its filing with the Commission, NYSE included statements concerning the purpose of, and basis for, the proposed rule change. The text of these statements may be examined at the places specified in Item IV below. NYSE has prepared summaries, set forth in Sections A, B, and C below, of the most significant aspects of such statements.

*A. Self-Regulatory Organization's Statement of the Purpose of, and Statutory Basis for, the Proposed Rule Change*

1. Purpose

Regulation NMS, adopted by the Securities and Exchange Commission (''SEC'') in April 2005,[5] provides that each trading center intending to qualify for trade-through protection under Regulation NMS Rule 611[6] is required to have a Regulation NMS-compliant trading system fully operational by March 5, 2007 (the ''Trading Phase Date'').[7]

For stocks priced below $1.00 per share, Regulation NMS Rule 612[8] permits markets to accept bids, offers, orders and indications of interest in increments smaller than $0.01, but not less than $0.0001, and to quote and trade such stocks in sub-pennies. Markets may choose not to accept such

[1] 15 U.S.C.78s(b)(1).

[2] 5 U.S.C. 78a.

[3] 17 CFR 40.19b–4.

[4] *See* Securities Exchange Act Release No. 58488 (September 8, 2008). For a complete list of the securities affected by this filing, *see* SR–NYSE–2008–81.

[5] *See* Securities Exchange Act Release No. 51808 (June 9, 2005), 17 CFR Parts 200, 201, 230, 240, 242, 249 and 270.

[6] *See* 17 CFR 242.611.

[7] *See* Securities Exchange Act Release No. 55160 (January 24, 2007), 72 FR 4202 (January 30, 2007) (S7–10–04).

[8] *See* 17 CFR 242.612. Rule 612 originally was to become effective on August 29, 2005, but the date was later extended to January 29, 2006. *See* Securities Exchange Act Release No. 52196 (Aug. 2, 2005), 70 FR 45529 (Aug. 8, 2005).

bids, offers, orders or indications of interest and the NYSE has done so, maintaining a minimum trading and quoting variation of $0.01 for all securities trading below $100,000. *See* NYSE Rule 62.

The SEC's interpretation of Rule 612 requires a market that routes an order to another market in compliance with Rule 611 and receives a sub-penny execution, to accept the sub-penny execution, report that execution to the customer, and compare, clear and settle that trade. The SEC, however, provided a limited exemption to Rule 611's proscription against trade-throughs to protected quotes that include a sub-penny component to such quotes that are better-priced by a minimum of $0.01.[9]

In March 2007, the Exchange amended Rule 123D to provide for a ''Sub-penny trading'' condition because the Exchange's trading systems did not then accommodate sub-penny executions on orders routed to better-priced protected quotations, nor could it recognize a quote disseminated by another market center if such quote had a sub-penny component and, therefore, could have inadvertently traded through better protected quotations. The amended rule automatically halts trading on the Exchange in a security whose price was about to fall below $1.00, without delisting the security, so that the security could continue to trade on other markets that deal in bids, offers, orders or indications of interest in sub-penny prices, until the price of the security had recovered sufficiently to permit the Exchange to resume trading in minimum increments of no less than one penny or the issuer is delisted for failing to correct the price condition within the time provided under NYSE rules.[10] A subsequent amendment established that any orders received by the NYSE in a security subject to a ''Sub-penny trading'' condition would be routed to NYSE Arca, Inc. and handled in accordance with the rules governing that market.[11]

Suspension of NYSE Rule 123D(3)

On September 7, 2008, Secretary of the Treasury Henry Paulson announced that the federal government would force Fannie Mae and Freddie Mac into a conservatorship that will result in the companies issuing warrants to the federal government representing approximately 80% ownership of the entities. Details of the plan are available at the Department of the Treasury's Web site, at *http://www.treas.gov/press/releases/reports/pspa_factsheet_090708%20hp1128.pdf.*

The NYSE was concerned that the Treasury Department's action could cause securities of Fannie Mae and Freddie Mac to trade below $1.00, and that as a result, trading on the NYSE in such securities would have been halted automatically under the NYSE Rule 123D(3), which governs Sub-penny trading halts. The NYSE was further concerned that, given the scope of the government's action, it would have been deleterious to the overall depth and quality of the market if the NYSE halted NYSE trading in those issues. As a result, the NYSE filed with the SEC for immediate effectiveness a proposal to suspend the operation of NYSE Rule 123D with respect to the securities of Fannie Mae and Freddie Mac. That rule filing proposed suspending the rule through the end of the primary trading session on September 15, 2008.

Notwithstanding that proposal, the NYSE now believes that the impact of the Treasury Department's action has been fully absorbed by the market, and that as a result, the need to continue trading on the NYSE below $1.00 is significantly less, while the potential for NYSE trades below $1.00 to cause the Exchange to violate its obligations under Reg NMS remains constant. As a result, commencing on September 11, 2008, the NYSE is proposing to lift the suspension of its Rule 123D(3) and to halt trading in securities of Fannie Mae and Freddie Mac any time they trade, or would open below $1.05 per share, as prescribed by the rule.

2. Statutory Basis

The proposed rule change is consistent with Section 6(b)[12] of the Securities Exchange Act of 1934 (the ''Act''), in general, and furthers the objectives of Section 6(b)(5)[13] in particular in that it is designed to prevent fraudulent and manipulative acts and practices, to promote just and equitable principles of trade, to foster cooperation and coordination with persons engaged in facilitating transactions in securities, and to remove impediments to and perfect the mechanism of a free and open market and a national market system.

In particular, the NYSE notes that the proposed rule change reinstates a rule whose initial purpose was to ensure that the NYSE did not inadvertently violate Reg NMS; the rule was only suspended in order to respond to a highly unusual market situation. The NYSE believes that reinstating the rule before September 15 is warranted since the need underlying the suspension request appears to have dissipated, and therefore it is appropriate to resume applying NYSE Rule 123D(3) as a prophylactic.

*B. Self-Regulatory Organization's Statement on Burden on Competition*

The Exchange does not believe that the proposed rule change will impose any burden on competition that is not necessary or appropriate in furtherance of the purposes of the Act.

*C. Self-Regulatory Organization's Statement on Comments on the Proposed Rule Change Received From Members, Participants or Others*

No written comments were solicited or received with respect to the proposed rule change.

**III. Date of Effectiveness of the Proposed Rule Change and Timing for Commission Action**

The Exchange has designated the proposed rule change as one that: (1) Does not significantly affect the protection of investors or the public interest; (2) does not impose any significant burden on competition; and (3) does not become operative for 30 days from the date of filing, or such shorter time as the Commission may designate if consistent with the protection of investors and the public interest. Therefore, the foregoing rule change has become effective pursuant to Section 19(b)(3)(A) of the Act[14] and subparagraph (f)(6) of Rule 19b–4 thereunder.[15]

A proposed rule change filed under 19b–4(f)(6) normally does not become operative until 30 days after the date of filing.[16] However, Rule 19b–4(f)(6)(iii)[17] permits the Commission to designate a shorter time if such action is consistent with the protection of investors and the public interest. The Exchange has requested that the Commission waive the 30-day operative delay so that the

[9] Order Granting National Securities Exchanges a Limited Exemption from Rule 612 of Regulation NMS under the Securities Exchange Act of 1934 to Permit Acceptance by Exchanges of Certain Sub-Penny Orders. *See* Securities and Exchange Commission Release No. 54714 (November 6, 2006).

[10] *See* Securities and Exchange Commission Release No. 34–55398; File No. SR–NYSE–2007–25 (Mar. 5, 2007).

[11] *See* Securities and Exchange Commission Release No. 34–55537; File No. SR–NYSE–2007–30 (Mar. 27, 2007).

[12] 15 U.S.C. 78f(b).

[13] 15 U.S.C. 78f(b)(5).

[14] 15 U.S.C. 78s(b)(3)(A).

[15] 17 CFR 240.19b–4(f)(6).

[16] *Id.* In addition, Rule 19b–4(f)(6)(iii) requires a self-regulatory organization to give the Commission written notice of its intent to file the proposed rule change at least five business days prior to the date of filing of the proposed rule change, or such shorter time as designated by the Commission. NYSE has satisfied this requirement.

[17] *Id.*

proposal may become operative, and the suspended rule may be reinstated, immediately upon filing. The Exchange believes that, while a suspension of Rule 123D(3) for Fannie Mae and Freddie Mac securities was warranted by the Treasury Department's actions, the immediate benefits of suspending that rule have diminished, and that therefore it is consistent with the Exchange Act that the rule be reinstated as expeditiously as possible, since the reinstated rule would prevent the Exchange from executing transactions in Fannie Mae and Freddie Mac securities at prices below $1.00 that may violate Regulation NMS.

The Commission believes that waiving the 30-day operative delay is consistent with the protection of investors and the public interest. The Commission therefore grants the Exchange's request and designates the proposal to be operative upon filing.[18]

At any time within 60 days of the filing of the proposed rule change, the Commission may summarily abrogate such rule change if it appears to the Commission that such action is necessary or appropriate in the public interest, for the protection of investors, or otherwise in furtherance of the purposes of the Act.

## IV. Solicitation of Comments

Interested persons are invited to submit written data, views, and arguments concerning the foregoing, including whether the proposed rule change is consistent with the Act. Comments may be submitted by any of the following methods:

*Electronic Comments*

- Use the Commission's Internet comment form (*http://www.sec.gov/rules/sro.shtml*); or
- Send an e-mail to *rule-comments@sec.gov.* Please include File No. SR–NYSE–2008–83 on the subject line.

*Paper Comments*

- Send paper comments in triplicate to Secretary, Securities and Exchange Commission, Station Place, 100 F Street, NE., Washington, DC 20549–1090.

All submissions should refer to File Number SR–NYSE–2008–83. This file number should be included on the subject line if e-mail is used. To help the Commission process and review your comments more efficiently, please use only one method. The Commission will post all comments on the Commission's Internet Web site (*http://www.sec.gov/rules/sro.shtml*). Copies of the submission, all subsequent amendments, all written statements with respect to the proposed rule change that are filed with the Commission, and all written communications relating to the proposed rule change between the Commission and any person, other than those that may be withheld from the public in accordance with the provisions of 5 U.S.C. 552, will be available for inspection and copying in the Commission's Public Reference Room, on official business days between the hours of 10 a.m. and 3 p.m. Copies of such filing also will be available for inspection and copying at the principal office of NYSE. All comments received will be posted without change; the Commission does not edit personal identifying information from submissions. You should submit only information that you wish to make available publicly. All submissions should refer to File Number SR–NYSE–2008–83 and should be submitted on or before October 8, 2008.

For the Commission, by the Division of Trading and Markets, pursuant to delegated authority.[19]

**Florence E. Harmon,**

*Acting Secretary.*

[FR Doc. E8–21704 Filed 9–16–08; 8:45 am]

**BILLING CODE 8010–01–P**

[18] For purposes only of waiving the 30-day operative delay of this proposal, the Commission has considered the proposed rule's impact on efficiency, competition, and capital formation. 15 U.S.C. 78c(f).

[19] 17 CFR 200.30–3(a)(12).

---

## SECURITIES AND EXCHANGE COMMISSION

**[Release No. 34–58517; File No. SR–NYSE–2008–61]**

## Self-Regulatory Organizations; New York Stock Exchange LLC; Order Approving Proposed Rule Change Amending NYSE Rule 104(e) (Dealings by Specialists) To Modify the Conditions Governing the Specialists' Use of the Price Improvement Trading Message Pursuant to NYSE Rule 104(b)(i)(H)

September 11, 2008.

On July 25, 2008, the New York Stock Exchange LLC (''NYSE'' or ''Exchange'') filed with the Securities and Exchange Commission (''Commission''), pursuant to Section 19(b)(1) of the Securities Exchange Act of 1934 (''Act'')[1] and Rule 19b–4 thereunder,[2] a proposed rule change to modify the rule governing the specialists' use of the price improvement trading message. The proposed rule change was published for comment in the **Federal Register** on August 7, 2008.[3] The Commission received no comments regarding the proposal. This order approves the proposed rule change.

Pursuant to NYSE Rule 104(b), specialists may use algorithms to generate quoting and trading messages. Such trading messages may provide price improvement to an order, subject to the conditions set forth in Rule 104(e). In order to provide price improvement to a marketable incoming order, Rule 104(e)(i) requires that the specialist must be represented in the bid or offer in a ''meaningful amount.'' Rule 104(e)(ii) defines ''meaningful amount'' as at least ten round-lots for the 100 most active securities on the Exchange, based on average daily volume, and at least five round-lots for all other securities on the Exchange. NYSE proposes to delete the requirement in Rule 104(e)(i) that specialists must be represented in a bid or offer in a meaningful amount to provide price improvement to the incoming order.[4]

The Commission has carefully reviewed the proposed rule change and finds that the proposed rule change is consistent with the requirements of the Act and the rules and regulations thereunder applicable to a national securities exchange,[5] and, in particular, Section 6(b)(5) of the Act,[6] which requires, among other things, that NYSE rules be designed to promote just and equitable principles of trade, to remove impediments to, and perfect the mechanism of, a free and open market and a national market system, and, in general, to protect investors and the public interest.

As NYSE stated in its proposal, average quote sizes on the Exchange have decreased in recent years.[7] Because of this, the Exchange believes the meaningful amount requirement for price improvement is a deterrent to specialists' participation in price improvement. The Commission believes that deletion of the meaningful amount requirement should encourage greater participation by specialists in the Exchange's price improvement mechanism. At the same time, the Commission must carefully review

[1] 15 U.S.C. 78s(b)(1).

[2] 17 CFR 240.19b–4.

[3] *See* Securities Exchange Act Release No. 58278 (July 31, 2008), 73 FR 46124 (''Notice'').

[4] As part of this rule change, NYSE also proposes deleting the definition of ''meaningful amount'' in Rule 104(e)(ii).

[5] In approving this proposed rule change, the Commission has considered the proposed rule's impact on efficiency, competition, and capital formation. 15 U.S.C. 78c(f).

[6] 15 U.S.C. 78f(b)(5).

[7] *See* Notice *supra* note 3, at 46125.

trading rule proposals that seek to offer special advantages to market participants. Although an exchange may reward its participants for the benefits they provide to the exchange's market, such rewards must not be disproportionate to the services provided.[8] In considering the totality of the benefits accorded to and obligations imposed upon specialists on the Exchange, the Commission believes that it is reasonable for NYSE to delete the ''meaningful amount'' requirement of Rule 104(e).[9]

*It is therefore ordered*, pursuant to Section 19(b)(2) of the Act, that the proposed rule change (SR–NYSE–2008–61) be, and it hereby is, approved.

For the Commission, by the Division of Trading and Markets, pursuant to delegated authority.[10]

**Florence E. Harmon,**

*Acting Secretary.*

[FR Doc. E8–21707 Filed 9–16–08; 8:45 am]

**BILLING CODE 8010–01–P**

---

## SECURITIES AND EXCHANGE COMMISSION

**[Release No. 34–58512; File No. SR–NYSEArca–2008–85]**

## Self-Regulatory Organizations; NYSE Arca, Inc.; Order Granting Accelerated Approval of a Proposed Rule Change Relating to the Listing and Trading of Shares of the PowerShares Active U.S. Real Estate Fund

September 11, 2008.

On August 11, 2008, NYSE Arca, Inc. (''NYSE Arca'' or ''Exchange''), through its wholly owned subsidiary, NYSE Arca Equities, Inc. (''NYSE Arca Equities''), filed with the Securities and Exchange Commission (''Commission'') pursuant to Section 19(b)(1) of the Securities Exchange Act of 1934 (''Act'')[1] and Rule 19b–4 thereunder,[2] a proposed rule change to list and trade shares (''Shares'') of the PowerShares Active U.S. Real Estate Fund (''Fund'') under NYSE Arca Equities Rule 8.600. The proposed rule change was published in the **Federal Register** on August 26, 2008 for a 15-day comment period.[3] The Commission received no comments on the proposal. This order grants approval to the proposed rule change on an accelerated basis.

### I. Description of the Proposal

The Exchange proposes to list and trade the Shares pursuant to NYSE Arca Equities Rule 8.600, which governs the listing of Managed Fund Shares.[4] The Exchange states that the Shares will conform to the initial and continued listing criteria under that rule.

The Shares will be offered by PowerShares Actively Managed Exchange-Traded Fund Trust (''Trust''),[5] a business trust organized under the laws of the State of Delaware and registered with the Commission as an open-end management investment company. The Exchange states that the Fund will not purchase or sell securities in markets outside the United States. The Exchange represents that, for initial and/or continued listing, the Fund will be in compliance with Rule 10A–3 under the Act,[6] as provided by NYSE Arca Equities Rule 5.3.

#### *A. Description of the Fund*

Invesco PowerShares Capital Management LLC (''Adviser'') is the investment adviser for the Fund and is registered as an ''investment adviser'' under the Investment Advisers Act of 1940 (''Advisers Act'').[7] Invesco Institutional (N.A.), Inc. is the Fund's primary investment sub-adviser and is also registered as an ''investment adviser'' under the Advisers Act. Invesco Aim Distributors, Inc. (the ''Distributor'') serves as the principal underwriter and distributor for the Fund.[8]

The Exchange states that, according to the Registration Statement, the Fund has an investment objective of high total return through growth of capital and current income. It seeks to achieve its investment objective by investing, under normal market conditions, at least 80% of its assets in securities of companies that are principally engaged in the U.S. real estate industry.[9] Specifically, the Fund plans to invest principally in equity real estate investment trusts (''REITs''). Equity REITs pool investors'' funds for investments primarily in real estate properties or real estate-related loans (*e.g.*, mortgages). The Fund may also invest in real estate operating companies (''REOCs''), as well as securities of other companies

---

[8] *See* Securities Exchange Act Release No. 58092 (July 3, 2008), 73 FR 40144 (July 11, 2008) at 40148.

[9] The Commission notes that, through a separate proposed rule change, the Exchange has proposed to eliminate all of the provisions relating to the specialists' price improvement mechanism under NYSE Rule 104(e) by October 15, 2008. *See* Securities Exchange Act Release No. 58184 (July 17, 2008), 73 FR 42853 (July 23, 2008) (SR–NYSE–2008–46).

[10] 17 CFR 200.30–3(a)(12).

[1] 15 U.S.C. 78s(b)(1).

[2] 17 CFR 240.19b–4.

[3] *See* Securities Exchange Act Release No. 58395 (August 20, 2008), 73 FR 50382.

[4] A Managed Fund Share is a security that represents an interest in an investment company registered under the Investment Company Act of 1940 (15 U.S.C. 80a) (''1940 Act'') organized as an open-end management investment company or similar entity that invests in a portfolio of securities selected by its investment adviser consistent with its investment objectives and policies. In contrast, an open-end investment company that issues Investment Company Units, listed and traded on the Exchange under NYSE Arca Equities Rule 5.2(j)(3), seeks to provide investment results that correspond generally to the price and yield performance of a specific foreign or domestic stock index, fixed income securities index, or a combination thereof.

[5] The Trust is registered under the 1940 Act. On June 26, 2008, the Trust filed with the Commission a Registration Statement for the Fund on Form N–1A under the Securities Act of 1933 (15 U.S.C. 77a) and under the 1940 Act relating to the Fund (File Nos. 333–147622 and 811–22148) (''Registration Statement''). The Exchange states that the description of the operation of the Trust herein is based on the Registration Statement.

[6] 17 CFR 240.10A–3.

[7] 15 U.S.C. 80b–1. The Exchange represents that the Adviser and its related personnel are subject to Rule 204A–1 under the Advisers Act (17 CFR 275.204A–1). This rule specifically requires the adoption of a code of ethics by an investment adviser to include, at a minimum: (1) A standard or standards of business conduct that reflect the fiduciary obligations of such investment adviser and its supervised persons; (2) provisions requiring its supervised persons to comply with applicable federal securities laws; (3) provisions that require all access persons to report, and such investment adviser to review, their personal securities transactions and holdings periodically as specifically set forth in Rule 204A–1; (4) provisions requiring supervised persons to report any violations of the code of ethics promptly to the chief compliance officer (''CCO'') or, provided the CCO also receives reports of all violations, to other persons designated in the code of ethics; and (5) provisions requiring the investment adviser to provide each of its supervised persons with a copy of the code of ethics and any amendments, and requiring its supervised persons to provide to such investment adviser written acknowledgement of their receipt of the code and any amendments. In addition, Rule 206(4)–7 under the Advisers Act makes it unlawful for an investment adviser to provide investment advice to clients unless such investment adviser has (i) adopted and implemented written policies and procedures reasonably designed to prevent violation, by the investment adviser and its supervised persons, of the Advisers Act and the rules adopted thereunder, (ii) reviewed no less frequently than annually the adequacy of the policies and procedures established pursuant to (i) above and the effectiveness of their implementation, and (iii) designated an individual (who is a supervised person) responsible for administering the policies and procedures adopted under (i) above. *See* 17 CFR 275.206(4)–7.

[8] The Exchange states that the Adviser is affiliated with the Distributor, a broker-dealer. As required by Commentary .07 to NYSE Arca Equities Rule 8.600, the Exchange represents that the Adviser has implemented a ''fire wall'' with respect to such broker-dealer regarding access to information concerning the composition and/or changes to the Fund's portfolio. Commentary .07 to NYSE Arca Equities Rule 8.600 also requires personnel, who make decisions on the portfolio composition of the Fund, must be subject to procedures designed to prevent the use and dissemination of material nonpublic information regarding the applicable Fund's portfolio.

[9] A company is considered to be principally engaged in the U.S. real estate industry if: (i) It derives 50% of its revenues or profits from the ownership, leasing, construction, financing, or sale of U.S. real estate; or (ii) it has at least 50% of the value of its assets invested in U.S. real estate.

principally engaged in the U.S. real estate industry. REOCs are similar to REITs, except that REOCs reinvest their earnings into the business, rather than distributing them to unit-holders like REITs. The 80% investment policy is non-fundamental and requires 60 days' prior written notice to shareholders before it can be changed. In constructing the portfolio, the sub-advisers (as described in the Registration Statement) analyze quantitative and statistical metrics to identify attractively priced securities. The security and portfolio evaluation process is generally conducted monthly. The sub-advisers will consider selling or reducing a security position if (1) the relative attractiveness of a security falls below desired levels, (2) a particular security's risk/return profile changes significantly, or (3) a more attractive investment opportunity is identified.

In addition, creations and redemptions of Shares will occur in large specified blocks referred to as ''Creation Units.'' The Creation Unit size for the Fund is 50,000 Shares. The net asset value (''NAV'') of the Fund will normally be determined as of the close of the regular trading session on the New York Stock Exchange LLC (ordinarily 4 p.m. Eastern time or ''ET'') on each business day.

*B. Availability of Information*

The Fund's Web site (*www.powershares.com*), which will be publicly available at no charge prior to the public offering of Shares, will include a form of the prospectus for the Fund that may be downloaded. The Web site will include additional quantitative information updated on a daily basis, including: (1) Daily trading volume, the prior business day's reported closing price, NAV and the mid-point of the bid/ask spread at the time of calculation of such NAV (''Bid/Ask Price''),[10] and a calculation of the premium and discount of the Bid/Ask Price against the NAV; and (2) data in chart format displaying the frequency distribution of discounts and premiums of the daily Bid/Ask Price against the NAV, within appropriate ranges, for each of the four previous calendar quarters. On each business day, before commencement of trading in Shares in the Core Trading Session on the Exchange, the Fund will disclose on its Web site the Disclosed Portfolio, as defined in NYSE Arca Equities Rule 8.600(c)(2),[11] that will form the basis for the Fund's calculation of NAV at the end of the business day.[12]

Investors can also obtain the Trust's Statement of Additional Information (''SAI''), the Fund's Shareholder Reports, and its Form N–CSR and Form N–SAR, filed twice a year. The Trust's SAI and Shareholder Reports are available free upon request from the Trust, and those documents and the Form N–CSR and Form N–SAR may be viewed on-screen or downloaded from the Commission's Web site.

Information regarding market price and trading volume of the Shares is and will be continually available on a real-time basis throughout the day on brokers' computer screens and other electronic services. Information regarding the previous day's closing price and trading volume information will be published daily in the financial section of newspapers. Quotation and last-sale information for the Shares will be available via the Consolidated Tape Association (''CTA'') high-speed line. In addition, the Portfolio Indicative Value (''PIV''), as defined in NYSE Arca Equities Rule 8.600(c)(3),[13] will be disseminated by the Exchange at least every 15 seconds during the Core Trading Session through the facilities of CTA. The dissemination of the PIV, together with the Disclosed Portfolio, will allow investors to determine the value of the underlying portfolio of a Fund on a daily basis and to provide a close estimate of that value throughout the trading day.

The Exchange states that more information regarding the Shares and the Fund, including investment strategies, risks, creation and redemption procedures, fees, portfolio holdings disclosure policies, distributions, and taxes can be found in the Registration Statement.[14]

*C. Initial and Continued Listing Criteria*

The Fund will be subject to the initial and continued listing criteria of NYSE Arca Equities Rule 8.600(d). The Exchange established that a minimum of 100,000 Shares will be required to be outstanding at the time of commencement of trading on the Exchange. In addition, the Exchange has represented that it will obtain a representation from the Fund that the NAV per Share will be calculated daily and that the NAV and the Disclosed Portfolio will be made available to all market participants at the same time.

*D. Trading Halts*

With respect to trading halts, the Exchange may consider all relevant factors in exercising its discretion to halt or suspend trading in the Shares of the Fund.[15] Trading in the Shares will be halted if the circuit breaker parameters in NYSE Arca Equities Rule 7.12 have been reached. Trading also may be halted because of market conditions or for reasons that, in the view of the Exchange, make trading in the Shares inadvisable. These may include: (1) The extent to which trading is not occurring in the securities comprising the Disclosed Portfolio and/or the financial instruments of the Fund; or (2) whether other unusual conditions or circumstances detrimental to the maintenance of a fair and orderly market are present. Trading in the Shares will be subject to NYSE Arca Equities Rule 8.600(d)(2)(D), which sets forth circumstances under which Shares of the Fund may be halted.

*E. Trading Rules*

The Exchange deems the Shares to be equity securities, thus rendering trading in the Shares subject to the Exchange's existing rules governing the trading of equity securities. The Shares will trade on the NYSE Arca Marketplace from 4 a.m. to 8 p.m. ET, in accordance with NYSE Arca Equities Rule 7.34 (Trading Sessions). The Exchange states that it has appropriate rules to facilitate transactions in the Shares during all trading sessions (Opening, Core Trading, and Late Trading Sessions). The minimum trading increment for the Shares on the Exchange will be $0.01.

*F. Surveillance*

The Exchange intends to utilize its existing surveillance procedures applicable to derivative products (which include Managed Fund Shares) to monitor trading in the Shares. The Exchange represents that these

[10] The Bid/Ask Price of the Fund is determined using the highest bid and the lowest offer on the Exchange as of the time of calculation of the Fund's NAV. The records relating to Bid/Ask Prices will be retained by the Fund and its service providers.

[11] The Disclosed Portfolio means the identities and quantities of the securities and other assets held by the Fund that will form the basis for the calculation of NAV at the end of the business day. *See* NYSE Arca Equities Rule 8.600(c)(2).

[12] Under accounting procedures followed by the Fund, trades made on the prior business day (''T'') will be booked and reflected in NAV on the current business day (''T+1''). Accordingly, the Fund will be able to disclose at the beginning of the business day the portfolio that will form the basis for the NAV calculation at the end of the business day.

[13] The Portfolio Indicative Value is the estimated indicative value of a Managed Fund Share based on current information regarding the value of the securities and other assets in the Disclosed Portfolio. *See* NYSE Arca Equities Rule 8.600(c)(3).

[14] *See supra* note 5. All terms relating to the Fund that are referred to, but not defined in, the proposed rule change are defined in the Registration Statement.

[15] *See* Commentary .04 to NYSE Arca Equities Rule 7.12.

procedures are adequate to properly monitor Exchange trading of the Shares in all trading sessions and to deter and detect violations of Exchange rules and applicable federal securities laws. The Exchange states that its current trading surveillance focuses on detecting securities trading outside their normal patterns. When such situations are detected, surveillance analysis follows and investigations are opened, where appropriate, to review the behavior of all relevant parties for all relevant trading violations.

The Exchange further states that it may obtain information via the Intermarket Surveillance Group (''ISG'') from other exchanges who are members of ISG. In addition, the Exchange states that it has a general policy prohibiting the distribution of material, non-public information by its employees.

*G. Information Bulletin*

Prior to the commencement of trading, the Exchange will inform its ETP Holders in an Information Bulletin (''Bulletin'') of the special characteristics and risks associated with trading the Shares. Specifically, the Bulletin will discuss the following: (1) The procedures for purchases and redemptions of Shares in Creation Unit aggregations (and that Shares are not individually redeemable); (2) NYSE Arca Equities Rule 9.2(a), which imposes a duty of due diligence on its ETP Holders to learn the essential facts relating to every customer prior to trading the Shares; (3) the risks involved in trading the Shares during the Opening and Late Trading Sessions when an updated PIV will not be calculated or publicly disseminated; (4) how information regarding the PIV is disseminated; (5) the requirement that ETP Holders deliver a prospectus to investors purchasing newly issued Shares prior to or concurrently with the confirmation of a transaction; and (6) trading information.

In addition, the Bulletin will reference that the Fund is subject to various fees and expenses described in the Registration Statement. The Bulletin will discuss any exemptive, no-action, and interpretive relief granted by the Commission from any rules under the Act. The Bulletin will also disclose that the NAV for the Shares will be calculated after 4 p.m. ET each trading day.

## II. Discussion and Commission's Findings

The Commission has carefully reviewed the proposed rule change and finds that it is consistent with the requirements of Section 6 of the Act [16] and the rules and regulations thereunder applicable to a national securities exchange.[17] In particular, the Commission finds that the proposal is consistent with Section 6(b)(5) of the Act,[18] which requires, among other things, that the Exchange's rules be designed to promote just and equitable principles of trade, to remove impediments to and perfect the mechanism of a free and open market and a national market system, and, in general, to protect investors and the public interest.

The Commission finds that the proposal to list and trade the Shares on the Exchange is consistent with Section 11A(a)(1)(C)(iii) of the Act,[19] which sets forth Congress' finding that it is in the public interest and appropriate for the protection of investors and the maintenance of fair and orderly markets to assure the availability to brokers, dealers, and investors of information with respect to quotations for and transactions in securities. Quotation and last-sale information for the Shares will be available via the CTA high-speed line, and the Exchange will disseminate the PIV at least every 15 seconds during the Core Trading Session. In addition, the Fund will make available on its Web site the Disclosed Portfolio that will form the basis for its calculation of the NAV, which will be determined as of the close of the regular trading session on the New York Stock Exchange LLC.

The Exchange further states that information regarding the market price and volume of the Shares will be continually available on a real-time basis throughout the day via electronic services, and that the previous day's closing price and trading volume information for the Shares will be published daily in the financial sections of newspapers. The Fund's Web site, which will be publicly accessible at no charge, will include additional quantitative information updated on a daily basis, including: (1) Daily trading volume, the prior business day's reported closing price, NAV, the Bid/Ask Price, and a calculation of the premium and discount of the Bid/Ask Price against the NAV; and (2) data in chart format displaying the frequency distribution of discounts and premiums of the daily Bid/Ask Price against the NAV, within appropriate ranges, for each of the four previous calendar quarters.

The Commission also believes that the proposal to list and trade the Shares is reasonably designed to promote fair disclosure of information that may be necessary to price the Shares appropriately and to prevent trading when a reasonable degree of transparency cannot be assured. The Commission notes that the Exchange will obtain a representation from the Fund that the NAV per Share will be calculated daily and that the NAV and the Disclosed Portfolio will be made available to all market participants at the same time. Additionally, if it becomes aware that the NAV per Share or the Disclosed Portfolio is not disseminated daily to all market participants at the same time, the Exchange will halt trading in the Shares until that information is available to all market participants.[20] Further, if the PIV is not being disseminated as required, the Exchange may halt trading during the day in which the disruption occurs and, if the interruption persists past the day in which it occurred, the Exchange will halt trading no later than the beginning of the trading day following the interruption.[21] The Commission notes that the Exchange represents that the Adviser has implemented a ''fire wall'' between it and the Distributor, an affiliated broker-dealer, regarding access to information concerning the composition and/or changes to the Fund's portfolio, as required by Commentary .07 to NYSE Arca Equities Rule 8.600. Finally, the Commission notes that the Reporting Authority, as defined in NYSE Arca Equities Rule 8.600(d)(2)(B)(ii),[22] that provides the Disclosed Portfolio must implement and maintain, or be subject to, procedures designed to prevent the use and dissemination of material non-public information regarding the actual components of the portfolio.

The Exchange has represented that the Shares are equity securities subject to the Exchange's rules governing the trading of equity securities. In support

[16] 15 U.S.C. 78f.

[17] In approving this proposed rule change the Commission has considered the proposed rule's impact on efficiency, competition, and capital formation. *See* 15 U.S.C. 78c(f).

[18] 15 U.S.C. 78f(b)(5).

[19] 15 U.S.C. 78k–1(a)(1)(C)(iii).

[20] *See* NYSE Arca Equities Rule 8.600(d)(2)(D).

[21] *See id.*

[22] The term ''Reporting Authority'' with respect to a particular series of Managed Fund Shares means NYSE Arca Equities, an institution, or a reporting service designed by NYSE Arca Equities or by the exchange that lists a particular series of Managed Fund Shares (if NYSE Arca Equities is trading such series pursuant to unlisted trading privileges) as the official source for calculating and reporting information relating to such series including, but not limited to, the PIV, Disclosed Portfolio, amount of any cash distribution to holders of Managed Fund Shares, NAV, or other information relating to the issuance, redemption, or trading of Managed Fund Shares. *See* NYSE Arca Equities Rule 8.600(c)(4).

of this proposal, the Exchange has made the following representations:

(1) The Shares will conform to the initial and continued listing criteria under NYSE Arca Equities Rule 8.600.

(2) The Exchange's surveillance procedures are adequate to properly monitor Exchange trading of the Shares in all trading sessions and to deter and detect violations of Exchange rules and applicable federal securities laws.

(3) Prior to the commencement of trading, the Exchange will inform its ETP Holders in a Bulletin of the special characteristics and risks associated with trading the Shares. Specifically, the Information Circular will discuss the following: (a) The procedures for purchases and redemptions of Shares in Creation Unit aggregations (and that Shares are not individually redeemable); (b) NYSE Arca Equities Rule 9.2(a), which imposes a duty of due diligence on its ETP Holders to learn the essential facts relating to every customer prior to trading the Shares; (c) the risks involved in trading the Shares during the Opening and Late Trading Sessions when an updated PIV will not be calculated or publicly disseminated; (d) how information regarding the PIV is disseminated; (e) the requirement that ETP Holders deliver a prospectus to investors purchasing newly issued Shares prior to or concurrently with the confirmation of a transaction; and (f) trading information.

(4) The Fund will be in compliance with Rule 10A–3 under the Act,[23] as provided by NYSE Arca Equities Rule 5.3.

(5) The Fund will not purchase or sell securities in markets outside the United States. This approval order is based on the Exchange's representations.

For the foregoing reasons, the Commission finds that the proposed rule change is consistent with Section 6(b)(5) of the Act [24] and the rules and regulations thereunder applicable to a national securities exchange.

## III. Accelerated Approval

The Commission finds good cause, pursuant to Section 19(b)(2) of the Act,[25] for approving the proposal prior to the thirtieth day after the date of publication of the Notice in the **Federal Register**. The Commission notes that it has approved the listing and trading on the Exchange of shares of other actively managed exchange-traded funds that are similar to the Shares of the Fund [26] and that it has received no comments regarding the proposed rule change. The Commission finds that the proposed rule change does not raise any novel regulatory issues and believes that accelerating approval of this proposal should benefit investors by creating, without undue delay, additional competition in the market for Managed Fund Shares.

## IV. Conclusion

*It is therefore ordered,* pursuant to Section 19(b)(2) of the Act,[27] that the proposed rule change (SR–NYSEArca–2008–85) be, and it hereby is, approved on an accelerated basis.

For the Commission, by the Division of Trading and Markets, pursuant to delegated authority.[28]

**Florence E. Harmon,**

*Acting Secretary.*

[FR Doc. E8–21706 Filed 9–16–08; 8:45 am]

**BILLING CODE 8010–01–P**

[23] *See supra* note 6.

[24] 15 U.S.C. 78f(b)(5).

[25] 15 U.S.C. 78s(b)(2).

[26] *See, e.g.,* Securities Exchange Act Release No. 57619 (April 4, 2008), 73 FR 19544 (April 10, 2008) (SR–NYSEArca–2008–25) (approving the listing and trading of shares of the PowerShares Active AlphaQ Fund, the PowerShares Active Alpha Multi-Cap Fund, the PowerShares Active Mega-Cap Portfolio, and the PowerShares Active Low Duration Portfolio).

[27] 15 U.S.C. 78s(b)(2).

[28] 17 CFR 200.30–3(a)(12).

# SMALL BUSINESS ADMINISTRATION

## Gulf Opportunity Pilot Loan Program (GO Loan Pilot)

**AGENCY:** U.S. Small Business Administration (SBA).

**ACTION:** Notice of extension of waiver of regulatory provisions.

**SUMMARY:** This notice announces the extension of the ''Notice of waiver of regulatory provisions'' for SBA's GO Loan Pilot until September 30, 2009. Due to the scope and magnitude of the devastation to Presidentially-declared disaster areas resulting from Hurricanes Katrina and Rita, the Agency is extending its full guaranty and streamlined and centralized loan processing available through the GO Loan Pilot to the small businesses in the eligible parishes/counties through September 30, 2009.

**DATES:** The waiver of regulatory provisions published in the **Federal Register** on November 17, 2005, is extended under this notice until September 30, 2009.

**FOR FURTHER INFORMATION CONTACT:** Charles Thomas, Office of FinancialAssistance, U.S. Small Business Administration, 409 Third Street, SW.,Washington, DC 20416; Telephone (202) 205–6490; *charles.thomas@sba.gov.*

**SUPPLEMENTARY INFORMATION:** On November 8, 2005, SBA initiated, on an emergency basis, the GO Loan Pilot which was designed to provide expedited small business financial assistance to businesses located in those communities severely impacted by Hurricanes Katrina and Rita. Under this unique initiative, SBA provides its full (85%) guaranty and streamlined and centralized loan processing to all eligible lenders that agree to make expedited SBA 7(a) loans available to small businesses located in, locating to or re-locating in the parishes/counties that have been Presidentially-declared as disaster areas resulting from Hurricanes Katrina and Rita, plus any contiguous parishes/counties.

To maximize the effectiveness of the GO Loan Pilot, on November 17, 2005, SBA published a notice in the **Federal Register** waiving for the GO Loan Pilot certain Agency regulations for the 7(a) Business Loan Program. (70 FR 69645). Since the pilot was designed as a temporary program scheduled to expire on September 30, 2006, and was extended to September 30, 2008, the waiver of certain Agency regulations also is due to expire on September 30, 2008. However, the Agency believes that there is a continuing, substantial need for the specific SBA assistance provided by this pilot in the affected areas. As part of a comprehensive federal initiative to assist in the continuing recovery of these highly devastated communities, the Agency believes it is essential that SBA extend this unique and vital program through September 30, 2009. Accordingly, the SBA is also extending its waiver of the Agency regulations identified in the **Federal Register** notice at 70 FR 69645 through September 30, 2009.

SBA's waiver of these provisions is authorized by regulations. These waivers apply only to those loans approved under the GO Loan Pilot and will last only for the duration of the Pilot, which expires September 30, 2009. As part of the GO Loan Pilot, these waivers apply only to those small businesses located in, locating to or re-locating in the parishes/counties that have been Presidentially-declared as disaster areas resulting from Hurricanes Katrina or Rita, plus any contiguous parishes/counties. (A list of all eligible parishes/counties is located at *http://www.sba.gov/idc/groups/public/documents/sba_homepage/serv_goloan_3.pdf.*)

**Authority:** 15 U.S.C. 636(a)(24); 13 CFR 120.3.

**Eric R. Zarnikow,**

*Associate Administrator, Office of Capital Access.*

[FR Doc. E8–21716 Filed 9–16–08; 8:45 am]

BILLING CODE 8025–01–P

## SMALL BUSINESS ADMINISTRATION

### Revocation of License of Small Business Investment Company

Pursuant to the authority granted to the United States Small Business Administration by the Final Order of the United States District Court of Maryland, Baltimore Division, dated June 17, 2008, the United States Small Business Administration hereby revokes the license of Anthem Capital, L.P., a Delaware limited partnership, to function as a small business investment company under the Small Business Investment Company License No. 0373–0200 issued to Anthem Capital, L.P. on September 26, 1994 and said license is hereby declared null and void as of June 31, 2008.

United States Small Business Administration.

Dated: September 8, 2008.

**A. Joseph Shepard,**

*Associate Administrator for Investment.*

[FR Doc. E8–21715 Filed 9–16–08; 8:45 am]

BILLING CODE 8025–01–P

## SOCIAL SECURITY ADMINISTRATION

### Agency Information Collection Activities: Proposed Request and Comment Request

The Social Security Administration (SSA) publishes a list of information collection packages requiring clearance by the Office of Management and Budget (OMB) in compliance with Public Law (Pub. L.) 104–13, the Paperwork Reduction Act of 1995, effective October 1, 1995. This notice includes revisions to OMB-approved information collections and extensions (no change) of existing OMB-approved information collections.

SSA is soliciting comments on the accuracy of the agency's burden estimate; the need for the information; its practical utility; ways to enhance its quality, utility, and clarity; and ways to minimize the burden on respondents, including the use of automated collection techniques or other forms of information technology. Mail, email, or fax your comments and recommendations on the information collection(s) to the OMB Desk Officer and the SSA Reports Clearance Officer to the addresses or fax numbers listed below.

(OMB), Office of Management and Budget, Attn: Desk Officer for SSA, Fax: 202–395–6974, e-mail address: *OIRA_Submission@omb.eop.gov.*

(SSA), Social Security Administration, DCBFM,Attn: Reports Clearance Officer,1333 Annex Building,6401 Security Blvd.,Baltimore, MD 21235,Fax: 410–965–6400, e-mail address: *OPLM.RCO@ssa.gov.*

I. The information collections listed below are pending at SSA. SSA will submit them to OMB within 60 days from the date of this notice. Therefore, your comments would be most helpful if you submit them to SSA within 60 days from the date of this publication. Individuals can obtain copies of the collection instruments by calling the SSA Reports Clearance Officer at 410–965–0454 or by writing to the e-mail address listed above.

1. *Supplement to Claim of Person Outside the United States—20 CFR 404.460, 404.463, 422.505(b), 42 CFR 407.27(c)—0960–0051.* SSA uses the information collected from Form SSA–21 to determine continuing entitlement to Social Security benefits and the proper benefit amounts of alien beneficiaries living outside the United States. SSA also uses the information to determine whether benefits are subject to withholding tax. The respondents are individuals entitled to Social Security benefits who are, will be, or have been residing outside the United States.

*Type of Request:* Revision of an OMB-approved information collection.

*Number of Respondents:* 35,000.

*Frequency of Response:* 1.

*Average Burden per Response:* 10 minutes.

*Estimated Annual Burden:* 5,833 hours.

2. *Coverage of Employees of State and Local Governments—20 CFR 404, Subpart M—0960–0425.* The Code of Federal Regulations at 20 CFR 404 prescribe the rules for states submitting reports of deposits and related recordkeeping to SSA. States (and interstate instrumentalities) are required to provide wage and deposit-related contribution information for pre-1987 periods. The respondents are state and local governments or interstate instrumentalities.

*Type of Request:* Extension of an OMB-approved information collection.

*Number of Respondents:* 52.

*Frequency of Response:* 1.

*Average Burden per Response:* 1 hour.

*Estimated Annual Burden:* 52 hours.

3. *Medical Report on Adult with Allegation of Human Immunodeficiency Virus Infection; Medical Report on Child with Allegation of Human Immunodeficiency Virus Infection—20 CFR 416.993–416.994—0960–0500.* SSA uses Forms SSA–4814–F5 and SSA–4815–F6 to collect information necessary to determine if an individual with Human Immunodeficiency Virus (HIV) infection, who is applying for Supplemental Security Income (SSI) disability benefits, meets the requirements for presumptive disability payments. The respondents are the medical sources of the applicants for SSI disability payments.

*Type of Request:* Revision of an OMB-approved information collection.

*Number of Respondents:* 59,100.

*Frequency of Response:* 1.

*Average Burden per Response:* 10 minutes.

*Estimated Annual Burden:* 9,850 hours.

4. *Application To Collect a Fee for Payee Services—20 CFR 404.2040(a), 416.640(a) 416.1103(f)—0960–0719.* SSA uses Form SSA–445 to collect information to make a determination whether to authorize or deny permission to collect fees for payee services. The respondents are private sector businesses or state and local government offices applying to become a fee-for-service organizational representative payee.

*Type of Request:* Extension of an OMB-approved information collection.

*Number of Respondents:* 100.

*Frequency of Response:* 1.

*Average Burden per Response:* 10 minutes.

*Estimated Annual Burden:* 17 hours.

5. *Request To Be Selected as a Payee—20 CFR 404.2010–404.2055, 416.601–416.665—0960–0014.* An individual applying to be a representative payee for a Social Security or SSI recipient completes Form SSA–11–BK. SSA designed the form to aid the investigation of a payee applicant. SSA uses the information to establish the applicant's relationship to the beneficiary, his/her justification and his/her concern for the beneficiary, as well as the manner in which the applicant will use the benefits. The respondents are representative payee applicants for Titles II, VIII, XVI.

*Type of Request:* Revision of an OMB-approved information collection.

*Number of Respondents:* 1,500,000.

*Estimated Annual Burden:* 248,335 hours.

| Collection method | Number of respondents | Frequency of response | Average burden per response | Total annual burden |
|---|---|---|---|---|
| Individuals/Households (90%): | | | | |
| Representative Payee System (RPS) | 135,000 | 1 | 10.5 | 23,625 |
| RPS/Signature Proxy | 765,000 | 1 | 9.5 | 121,125 |
| Paper Version | 450,000 | 1 | 10.5 | 78,750 |
| Totals | 1,350,000 | | | 223,500 |
| Private Sector (9%): | | | | |
| RPS | 13,500 | 1 | 10.5 | 2,363 |
| RPS/Signature Proxy | 76.500 | 1 | 9.5 | 12,113 |
| Paper Version | 45,000 | 1 | 10.5 | 7,875 |
| Totals | 135,000 | | | 22,351 |
| State/Local/Tribal Government (1%): | | | | |
| RPS | 1,500 | 1 | 10.5 | 263 |
| RPS/Signature Proxy | 8,500 | 1 | 9.5 | 1,346 |
| Paper Version | 5,000 | 1 | 10.5 | 875 |
| Totals | 15,000 | | | 2,484 |
| Grand Total: | 1,500,000 | | | 248,335 |

6. *Modified Benefit Formula Questionnaire—Foreign Pension—0960–0561.* SSA uses the information collected on Form SSA–308 to determine exactly how much (if any) of a foreign pension may be used to reduce the amount of Title II Social Security retirement or disability benefits under the modified benefit formula. The respondents are applicants for Title II Social Security retirement or disability benefits who have foreign pensions.

*Type of Request:* Revision of an OMB-approved information collection.

*Number of Respondents:* 50,000.

*Frequency of Response:* 1.

*Average Burden per Response:* 10 minutes.

*Estimated Annual Burden:* 8,333 hours.

7. *Claimant's Work Background—20 CFR 404.1565(b), 20 CFR 416.965(b)—0960–0300.* SSA uses the information from form HA–4633 when an individual has requested a hearing before an administrative law judge (ALJ) on the issue of whether or not he or she is disabled. The completed HA–4633 provides an updated summary of the individual's relevant work history, information the ALJ requires in assessing a claimant's disability within the meaning of the Social Security Act. The respondents are members of the public who have filed for disability benefits under Title II and/or Title XVI and have requested a hearing before an ALJ.

*Type of Request:* Extension of an OMB-approved information collection.

*Number of Respondents:* 151,000.

*Frequency of Response:* 1.

*Average Burden per Response:* 15 minutes.

*Estimated Annual Burden:* 37,750 hours.

II. SSA has submitted the information collections listed below. Your comments on the information collections will be most useful if OMB and SSA receive them within 30 days from the date of this publication. You can request a copy of the information collections by e-mail, *OPLM.RCO@ssa.gov*, fax 410–965–6400, or by calling the SSA Reports Clearance Officer at 410–965–0454.

1. *Statement Regarding Date of Birth and Citizenship—20 CFR 404.716—0960–0016.* Form SSA–702 collects information needed when preferred or other evidence is not available to prove age or citizenship for an individual applying for Social Security benefits. SSA uses the information to establish age as a factor of entitlement to Social Security benefits or U.S. citizenship as a payment factor. Respondents are individuals with knowledge about the date of birth and/or citizenship of applicants for one or more Social Security benefits who need to establish their dates of birth as a factor of entitlement or U.S. citizenship as a factor of payment.

*Type of Request:* Extension of an OMB-approved information collection.

*Number of Respondents:* 1,200.

*Frequency of Response:* 1.

*Average Burden per Response:* 10 minutes.

*Estimated Annual Burden:* 200 hours.

2. *Application for Benefits under a U.S. International Social Security Agreement—20 CFR 404.1925—0960–0448.* SSA uses information from Form SSA–2490–BK to determine entitlement to Social Security benefits from the United States or from a country that has entered into a Social Security agreement with the United States. The respondents are individuals who are applying for old age, survivors or disability benefits from the United States or from a Totalization agreement country.

*Type of Request:* Extension of an OMB-approved information collection.

*Number of Respondents:* 26,700.

*Frequency of Response:* 1.

*Average Burden per Response:* 30 minutes.

*Estimated Average Burden:* 13,350 hours.

3. *Plan for Achieving Self-Support—20 CFR 416.110(e), 416.1180–1182, 416.1225–1227—0960–0559.* SSA collects the information on Form SSA–545 when an SSI applicant/recipient desires to use available income and resources to obtain education and/or training in order to become self-supportive. SSA uses the information to evaluate the recipient's plan for achieving self-support to determine whether to approve the plan under the provisions of the SSI program. The respondents are SSI applicants/recipients who are blind or disabled and want to develop a plan to go to work.

*Type of Request:* Extension of an OMB-approved information collection.

*Number of Respondents:* 7,000.

*Frequency of Response:* 1.

*Average Burden per Response:* 2 hours.

*Estimated Annual Burden:* 14,000 hours.

4. *Authorization to Disclose Information to Social Security Administration—20 CFR 404.1512 & 20 CFR 416.912—0960–0623.* SSA must obtain sufficient medical evidence to make eligibility determinations for Social Security disability benefits and

SSI payments. For SSA to obtain medical evidence, an applicant must authorize his or her medical source(s) to release the information to SSA. The applicant may use Form SSA–827 to provide consent for the release of information. Generally, the State Disability Determination Service completes the form(s) based on information provided by the applicant, and sends the form(s) to the designated medical source(s). The respondents are applicants for Title II benefits and Title XVI payments.

*Type of Request:* Revision of a currently approved information collection.

READING, SIGNING, AND DATING THE 1ST SSA–827 (10 MINUTES)

| Total respondents | Number of reports by each respondent | Total annual responses | Estimated number of minutes per response | Total burden hours |
|---|---|---|---|---|
| 3,853,928 | 1 | 3,853,928 | 10 | 642,321 |

SIGNING AND DATING THREE ADDITIONAL SSA–827S

| Total respondents | Number of reports by each respondent | Total annual responses | Estimated number of minutes per response | Total burden hours |
|---|---|---|---|---|
| 3,853,928 | 3 | 11,561,784 | 1 | 192,696 |

READING THE EXPLANATION OF THE SSA–827 ON THE INTERNET

| Total respondents | Number of reports by each respondent | Total annual responses | Estimated number of minutes per response | Total burden hours |
|---|---|---|---|---|
| 586,232 | 1 | 586,232 | 3 | 29,312 |

*Collectively:*

*Number of Respondents:* 3,853,928.

*Frequency of Response (Average per case):* 4.

*Average Burden per Response:* 13 minutes to complete all 4 forms.

*Average Burden to Read Internet Instructions:* 3 minutes.

*Estimated Annual Burden for Reading Internet Explanation:* 29,312.

*Estimated Annual Burden to read instructions and complete the form:* 864,329 hours.

5. *Review of the Disability Hearing Officer's Reconsidered Determinations Before It Is Issued—20 CFR 404.913–404.918, 404.1512–404.1515, 404.1589, 416.912–416.915, 416.989, 416.1413–416.1418, 404.918(d) and 416.1418(d)—0960–0709.* When SSA approves a claim for Social Security disability benefits or SSI payments, it periodically conducts a continuing disability review (CDR) during which the agency reviews the claimant's status to see if his/her condition has improved to the point where the claimant is capable of working. If SSA notifies a claimant that the agency will cease paying benefits, the claimant may appeal that determination. The first appeal gives the claimant the opportunity for a full evidentiary hearing before a disability hearing officer (DHO). A federal component reviews a small sample of the DHO's determinations. It is rare for the reviewing component to reverse a DHO determination favorable to the claimant. Before SSA can produce the unfavorable determination, the claimant has 10 days to provide a written statement explaining why SSA should not stop payments. That written statement is the information collected in this process. Respondents are CDR claimants whose benefits are going to cease.

*Type of Request:* Extension of an OMB-approved information collection.

*Number of Respondents:* 8.

*Frequency of Response:* 1.

*Average Burden per Response:* 60 minutes.

*Estimated Annual Burden:* 8 hours.

6. *Farm Arrangement Questionnaire—20 CFR 404.1082(c)—0960–0064.* When self-employed workers submit earnings data to SSA, they cannot count rental income from a farm unless they demonstrate ''material participation'' in the farm's operation. A material participation arrangement means the farm owners who are seeking to have earnings counted by SSA must perform a combination of physical duties, management decisions, and capital investment in the farm they are renting out. In such cases, SSA uses form SSA–7157, the Farm Arrangement Questionnaire, to document material participation. The respondents are workers who are renting farmland to other people and who are involved in the operation of the farm and want to claim countable income from their work there.

*Type of Request:* Extension of an OMB-approved information collection.

*Number of Respondents:* 38,000.

*Frequency of Response:* 1.

*Average Burden per Response:* 30 minutes.

*Estimated Annual Burden:* 19,000 hours.

7. *Disability Update Report—20 CFR 404.1589–.1595, 416.988–.996—0960–0511.* SSA periodically reviews current disability cases to determine if the recipients should continue to receive disability payments. In cases where these reviews indicate beneficiaries might have experienced a medical improvement, SSA must investigate further. The agency uses form SSA–455/SSA–455–OCR–SM, the Disability Update Report, for this purpose. Specifically, SSA uses the information it gathers on this form to determine if (1) there is enough evidence to warrant referring the beneficiary for a full medical CDR (2) the beneficiary's impairment has not changed enough to warrant a CDR; or (3) there are unresolved work-related issues for the beneficiary. The respondents are Title II

and Title XVI disability payment recipients.

*Type of Request:* Extension of an OMB-approved information collection.

*Number of Respondents:* 880,000.

*Frequency of Response:* 1.

*Average Burden per Response:* 15 minutes.

*Estimated Annual Burden:* 220,000 hours.

Dated: September 10, 2008.

**Elizabeth A. Davidson,**

*Reports Clearance Officer, Social Security Administration.*

[FR Doc. E8–21591 Filed 9–16–08; 8:45 am]

**BILLING CODE 4191–02–P**

## SOCIAL SECURITY ADMINISTRATION

**[Docket No. SSA 2008–0046]**

## Privacy Act of 1974, as Amended; Computer Matching Program; (SSA/Centers for Medicare and Medicaid (CMS) Match Number 1076)

**AGENCY:** Social Security Administration (SSA).

**ACTION:** Notice of the renewal of an existing computer matching program which is scheduled to expire on October 15, 2008.

**SUMMARY:** In accordance with the provisions of the Privacy Act, as amended, this notice announces the renewal of an existing computer matching program that SSA is currently conducting with CMS.

**DATES:** SSA will file a report of the subject matching program with the Committee on Homeland Security and Governmental Affairs of the Senate; the Committee on Oversight and Government Reform of the House of Representatives; and the Office of Information and Regulatory Affairs, Office of Management and Budget (OMB). The renewal of the matching program will be effective as indicated below.

**ADDRESSES:** Interested parties may comment on this notice by either telefax to (410) 965–0201 or writing to the Deputy Commissioner for Budget, Finance and Management, 800 Altmeyer Building, 6401 Security Boulevard, Baltimore, MD 21235–6401. All comments received will be available for public inspection at this address.

**FOR FURTHER INFORMATION CONTACT:** The Deputy Commissioner for Budget, Finance and Management as shown above.

**SUPPLEMENTARY INFORMATION:**

### A. General

The Computer Matching and Privacy Protection Act of 1988 (Pub. L. 100–503), amended the Privacy Act (5 U.S.C. 552a) by describing the conditions under which computer matching involving the Federal government could be performed and adding certain protections for individuals applying for, and receiving, Federal benefits. Section 7201 of the Omnibus Budget Reconciliation Act of 1990 (Pub. L. 101–508) further amended the Privacy Act regarding protections for such individuals.

The Privacy Act, as amended, regulates the use of computer matching by Federal agencies when records in a system of records are matched with other Federal, State or local government records. It requires Federal agencies involved in computer matching programs to:

(1) Negotiate written agreements with the other agency or agencies participating in the matching programs;

(2) Obtain the approval of the matching agreement by the Data Integrity Boards (DIB) of the participating Federal agencies;

(3) Publish notice of the computer matching program in the **Federal Register**;

(4) Furnish detailed reports about matching programs to Congress and OMB;

(5) Notify applicants and beneficiaries that their records are subject to matching; and

(6) Verify match findings before reducing, suspending, terminating or denying an individual's benefits or payments.

### B. SSA Computer Matches Subject to the Privacy Act

We have taken action to ensure that all of SSA's computer matching programs comply with the requirements of the Privacy Act, as amended.

Dated: August 27, 2008.

**Mary Glenn-Croft,**

*Deputy Commissioner for Budget, Finance and Management.*

### Notice of Computer Matching Program, Social Security Administration (SSA) With the Centers for Medicare and Medicaid (CMS)

#### A. PARTICIPATING AGENCIES

SSA and CMS.

#### B. PURPOSE OF THE MATCHING PROGRAM

The purpose of this agreement is to establish the conditions, terms and safeguards under which CMS agrees to the ongoing disclosure of certain skilled nursing facility admission data by CMS to SSA. CMS will disclose the data through a computer matching operation for SSA's use in identifying Supplemental Security Income (SSI) recipients who did not report their admission to a facility as required under applicable provisions of the Social Security Act (the Act). Such admission would subject the amount of SSI which an individual could receive for any month throughout which the individual is in such a facility to a reduced benefit rate. The SSI program provides payments to aged, blind and disabled recipients with income and resources below levels established by law and regulations.

SSA will use other benefit information for the Title VIII, Special Veterans' Benefits (SVB) determinations of entitlement and benefit amount. Other benefit information is defined as any recurring payment received as an annuity, pension, retirement or disability benefit. The match will be used to identify those SVB beneficiaries who are no longer residing outside the United States.

#### C. AUTHORITY FOR CONDUCTING THE MATCHING PROGRAM

This Matching Agreement between SSA and CMS is executed pursuant to the Privacy Act of 1974 (5 U.S.C. 552a), as amended (Pub. L. 100–503, the Computer Matching and Privacy Protection Act (CMPPA) of 1988), the Office of Management and Budget (OMB) Circular A–130, titled ''Management of Federal Information Resources'' at 61 FR 6428–6435 (February 20, 1996), and OMB guidelines pertaining to computer matching at 54 FR 25818 (June 19, 1989).

Legal authority for the SSI portion of the matching program described above is contained in sections 1611(e)(1)(A) and (B) and 1631(f) of the Act (42 U.S.C. 1382(e)(1)(A) and (B) and 1383(f)); see also 20 CFR 416.211.

Legal authority for the SVB portion of the matching program is contained in sections 801 and 806(a) and (b) of the Act (42 U.S.C. 1001 and 1006(a) and (b)).

#### D. CATEGORIES OF RECORDS AND INDIVIDUALS COVERED BY THE MATCHING PROGRAM

SSA will provide CMS with a finder file on a monthly basis extracted from SSA's Supplemental Security Income Record and Special Veterans Benefits (SSR/SVB), SSA/ODSSIS 60–0103, with identifying information with respect to recipients of SSI benefits. CMS will match the SSA finder file against the system of records for individuals on the Long-Term Care Minimum Data Set

(LTC/MDS 09–70–1517), and submit their reply file to SSA no later than 21 days after receipt of the SSA finder file. The Title VIII benefit information is included in the SSI system of records and is paid using SSA's SSI automated system. The indicator identifying Title VIII claims resides on the SSR, SSA/ODSSIS 60–0103, though it is not an SSI payment. Routine Use Number 19, effective January 11, 2006, allows disclosure to Federal, State or local agencies for administering cash or non-cash income maintenance or health maintenance programs.

The Finder File that SSA will furnish to CMS will contain approximately 6½ million records of recipients of SSI and SVB. CMS's Reply File will contain the matched records. Each matched record will include a certain number of relevant MDS CMS appended records. CMS will provide SSA with the Provider of Service Information on the facilities involved in the match (e.g., provider name, address, telephone number, date of admission, date of discharge, projected length of stay, and payment source). The number of records for individuals returned to SSA will approximate 25,000 monthly.

SSA will provide the Finder File to CMS as often as monthly. CMS will submit its Reply File to SSA no later than 21 days after receipt of the SSA Finder File.

This matching program employs systems which contain Protected Health Information (PHI) as defined by HHS regulation ''Standards for Privacy of Individually Identifiable Health Information'' (45 CFR 160 and 164, Subparts A and E) (65 FR 82462 (Dec. 28, 2000)). Disclosures of PHI authorized by these routine uses may only be made if, and as permitted, or required by the ''Standard for Privacy of Individually Identifiable Health Information''.

#### E. INCLUSIVE DATES OF THE MATCHING PROGRAM

The matching program will become effective no sooner than 40 days after notice of the matching program is sent to Congress and the Office of Management and Budget, or 30 days after publication of this notice in the **Federal Register**, whichever date is later. The matching program will continue for 18 months from the effective date and may be extended for an additional 12 months thereafter, if certain conditions are met.

[FR Doc. E8–21632 Filed 9–16–08; 8:45 am]

BILLING CODE 4191–02–P

## DEPARTMENT OF STATE

**[Public Notice 6292]**

### U.S. Department of State Advisory Committee on Private International Law: Notice of Meeting

The Department of State's Advisory Committee on Private International Law (ACPIL) will hold its annual meeting on the ''state of the world'' concerning private international law on Monday, October 6th and Tuesday, October 7th, 2008 in Washington, DC. The meeting will be held at the Michael K. Young Faculty Conference Center, George Washington University Law School, 2000 H Street, NW., Washington, DC 20052 and will begin at 10 a.m. on Monday and at 9:30 a.m. on Tuesday. The meeting will conclude at 5 p.m. on both days.

Subject to time limitations, we expect to provide updates on trends and developments in a number of areas: International Family Law (including the 2007 Child Support Convention); the recently concluded UNCITRAL Convention on Contracts for the International Carriage of Goods Wholly or Partly by Sea; Commercial Law Treaties (Securities Conventions, Geneva conference and the EU, intellectual property, e-commerce, rail and space satellite finance, the UNIDRIT model leasing law); International/Comparative Government Procurement; the OAS and the CIDIP VII process (consumer protection and secured transactions registry); and issues related to ratification and implementation of PIL treaties in our federal system. Ample time will be provided for open discussion, so we hope to have broad and active participation from a wide range of interested parties.

Documents on these subjects are obtainable at *http://www.uncitral.org; http://www.hcch.net; http://www.unidroit.org;* and *http://www.oas.org*. Additional documents will be provided by e-mail wherever possible. Comments on any topic within the agenda mentioned above will be welcomed from those unable to attend.

Please advise us as early as possible if you plan to attend. The meeting is open to the public up to the capacity of the meeting room. Interested persons are invited to attend and to express their views. Persons who wish to have their view considered are encouraged, but not required, to submit written comments in advance. Comments should be sent electronically to *SmeltzerTK@State.gov*. Anyone planning to attend this meeting is requested to provide his or her name, affiliation and contact information in advance to Trish Smeltzer or Niesha Toms at (202) 776–8420 or by e-mail to *TomsNN@State.gov*.

To register or obtain further information, please contact Niesha Toms at *TomsNN@State.gov*. The direct number for the office is (202) 776–8420, fax (202) 776–8482. For updates pertaining to this meeting as well as future notices, please provide our office with current e-mail and fax numbers when you reply. If you do not plan to attend the meeting, you are encouraged to provide your contact information to be kept abreast of PIL developments.

Dated: September 11, 2008.

**Niesha Toms,**

*Office of Private International Law, Department of State.*

[FR Doc. E8–21755 Filed 9–16–08; 8:45 am]

BILLING CODE 4710–08–P

## DEPARTMENT OF TRANSPORTATION

### Federal Aviation Administration

### Agency Information Collection Activity Seeking OMB Approval

**AGENCY:** Federal Aviation Administration (FAA), DOT.

**ACTION:** Notice.

**SUMMARY:** The FAA invites public comments about our intention to request the Office of Management and Budget's (OMB) revision of a current information collection. The **Federal Register** Notice with a 60-day comment period soliciting comments on the following collection of information was published on June 19, 2008, vol. 73, no. 119, page 36869. Certain organizations may apply to perform certification functions on behalf of the FAA. These functions may include approving data, issuing various kinds of aircraft and organization certificates, and other functions.

**DATES:** Please submit comments by October 17, 2008.

**FOR FURTHER INFORMATION CONTACT:** Carla Mauney at *Carla.Mauney@faa.gov.*

**SUPPLEMENTARY INFORMATION:**

#### Federal Aviation Administration (FAA)

*Title:* Organization Designation Authorization—Part 183, Subpart D.

*Type of Request:* Revision of a currently approved collection.

*OMB Control Number:* 2120–0704.

*Forms(s)* 8100–11, 8100–12, 8100–13.

*Affected Public:* An estimated 83 Respondents.

*Frequency:* This information is collected on occasion.

*Estimated Average Burden per Response:* Approximately 30 hours per response.

*Estimated Annual Burden Hours:* An estimated 5,158 hours annually.

*Abstract:* Certain organizations may apply to perform certification functions on behalf of the FAA. These functions may include approving data, issuing various kinds of aircraft and organization certificates, and other functions.

**ADDRESSES:** Interested persons are invited to submit written comments on the proposed information collection to the Office of Information and Regulatory Affairs, Office of Management and Budget. Comments should be addressed to Nathan Lesser, Desk Officer, Department of Transportation/FAA, and sent via electronic mail to *oira_submission@omb.eop.gov* or faxed to (202) 395–6974.

*Comments are invited on:* Whether the proposed collection of information is necessary for the proper performance of the functions of the Department, including whether the information will have practical utility; the accuracy of the Department's estimates of the burden of the proposed information collection; ways to enhance the quality, utility, and clarity of the information to be collected; and ways to minimize the burden of the collection of information on respondents, including the use of automated collection techniques or other forms of information technology.

Issued in Washington, DC, on September 9, 2008.

**Carla Mauney,**

*FAA Information Collection Clearance Officer, IT Enterprises Business Services Division, AES–200.*

[FR Doc. E8–21512 Filed 9–16–08; 8:45 am]

**BILLING CODE 4910–13–M**

## DEPARTMENT OF TRANSPORTATION

### Federal Aviation Administration

### Agency Information Collection Activity Seeking OMB Approval

**AGENCY:** Federal Aviation Administration (FAA), DOT.

**ACTION:** Notice.

**SUMMARY:** The FAA invites public comments about our intention to request the Office of Management and Budget's (0MB) revision of a current information collection. The **Federal Register** Notice with a 60-day comment period soliciting comments on the following collection of information was published on June 19, 2008, vol. 73, no. 119, page 34973. The information is used to determine if licensees have complied with financial responsibility requirements (including maximum probable loss determination) as set forth in FAA regulations.

**DATES:** Please submit comments by October 17, 2008.

**FOR FURTHER INFORMATION CONTACT:** Carla Mauney at *Carla.Mauney@faa.gov*.

**SUPPLEMENTARY INFORMATION:**

**Federal Aviation Administration (FAA)**

*Title:* Financial Responsibility for Licensed Launch Activities.

*Type of Request:* Extension without change of a currently approved collection

*OMB Control Number:* 2120–0601.

*Forms(s):* There are no FAA forms associated with this collection.

*Affected Public:* An estimated 6 respondents.

*Frequency:* This information is collected on occasion.

*Estimated Average Burden per Response:* Approximately 100 hours per response.

*Estimated Annual Burden Hours:* An estimated 600 hours annually.

*Abstract:* Information is used to determine if licensees have complied with financial responsibility requirements (including maximum probable loss determination) as set forth in FAA regulations.

**ADDRESSES:** Interested persons are invited to submit written comments on the proposed information collection to the Office of Information and Regulatory Affairs, Office of Management and Budget. Comments should be addressed to Nathan Lesser, Desk Officer, Department of Transportation/FAA, and sent via electronic mail to *oira_submissionomb.eop,gov* or faxed to (202) 395–6974.

*Comments are invited on:* Whether the proposed collection of information is necessary for the proper performance of the functions of the Department, including whether the information will have practical utility; the accuracy of the Department's estimates of the burden of the proposed information collection; ways to enhance the quality, utility, and clarity of the information to be collected; and ways to minimize the burden of the collection of information on respondents, including the use of automated collection techniques or other forms of information technology.

Issued in Washington, DC, on September 9, 2008.

**Carla Mauney,**

*FAA Information Collection Clearance Officer, IT Enterprises Business Services Division, AES–200.*

[FR Doc. E8–21513 Filed 9–16–08; 8:45 am]

**BILLING CODE 4910–13–M**

## DEPARTMENT OF TRANSPORTATION

### Federal Aviation Administration

### Agency Information Collection Activity Seeking OMB Approval

**AGENCY:** Federal Aviation Administration (FAA), DOT.

**ACTION:** Notice.

**SUMMARY:** The FAA invites public comments about our intention to request the Office of Management and Budget's (OMB) revision of a current information collection. The **Federal Register** Notice with a 60-day comment period soliciting comments on the following collection of information was published on June 19, 2008, vol. 73, no. 119, pages 34974–34975. 14 CFR part 133 was adopted to establish certification rules and application requirements governing non-passenger-carrying rotorcraft external-load operations conducted for compensation or hire.

**DATES:** Please submit comments by October 17, 2008.

**FOR FURTHER INFORMATION CONTACT:** Carla Mauney at *Carla.Mauney@faa.gov.*

**SUPPLEMENTARY INFORMATION:**

**Federal Aviation Administration (FAA)**

*Title:* Rotorcraft External Load Operator Certificate Application.

*Type of Request:* Extension without change of a currently approved collection.

*OMB Control Number:* 2 120–0044.

*Forms(s)* 8710–4.

*Affected Public:* An estimated 4,000 Respondents.

*Frequency:* This information is collected on occasion.

*Estimated Average Burden per Response:* Approximately 2.25 hours per response.

*Estimated Annual Burden Hours:* An estimated 3,268 hours annually.

*Abstract:* 14 CFR 133 was adopted to establish certification rules and application requirements governing non-passenger-carrying rotorcraft external-load operations conducted for compensation or hire.

**ADDRESSES:** Interested persons are invited to submit written comments on the proposed information collection to the Office of Information and Regulatory Affairs, Office of Management and Budget. Comments should be addressed to Nathan Lesser, Desk Officer, Department of Transportation/FAA, and sent via electronic mail to *oira_submission@omb.eop.gov* or faxed to (202) 395–6974.

*Comments are invited on:* Whether the proposed collection of information is necessary for the proper performance

of the functions of the Department, including whether the information will have practical utility; the accuracy of the Department's estimates of the burden of the proposed information collection; ways to enhance the quality, utility, and clarity of the information to be collected; and ways to minimize the burden of the collection of information on respondents, including the use of automated collection techniques or other forms of information technology.

Issued in Washington, DC, on September 9, 2008.

**Carla Mauney,**

*FAA Information Collection Clearance Officer, IT Enterprises Business Services Division, AES–200.*

[FR Doc. E8–21514 Filed 9–16–08; 8:45 am]

**BILLING CODE 4910–13–M**

## DEPARTMENT OF TRANSPORTATION

### Federal Aviation Administration

### Notice of Intent To Rule on Request To Release Airport Property at the Smyrna/Rutherford County Airport, Smyrna, TN

**AGENCY:** Federal Aviation Administration (FAA), DOT.

**ACTION:** Request for public comment.

**SUMMARY:** The Federal Aviation Administration is requesting public comment on the release of land at the Smyrna/Rutherford County Airport in the city of Smyrna, Tennessee. This property, approximately 15.65 acres plus associated buildings, will change to ownership by the Tennessee Air National Guard. This action is taken under the provisions of Section 125 of the Wendell H. Ford Aviation Investment Reform Act for the 21 Century (AIR 21).

**DATES:** Comments must be received on or before October 17, 2008.

**ADDRESSES:** Documents are available for review at the Smyrna/Rutherford County Airport, 278 Doug Warpoole Road, Smyrna, Tennessee 37167, the Tennessee Department of Transportation, Division of Aeronautics, 424 Knapp Blvd, Bldg 4219, Nashville, TN 3721 and the FAA Airports District Office, 2862 Business Park Drive, Building G, Memphis, TN 38118. Written comments on the Sponsor's request must be delivered or mailed to: Mr. Phillip J. Braden, Manager, Memphis Airports District Office, 2862 Business Park Drive, Building G, Memphis, TN 38118.

In addition, a copy of any comments submitted to the FAA must be mailed or delivered to Mr. Bob Woods, Director, TDOT, Division of Aeronautics, P.O. Box 17326, Nashville, TN 37217 and Mr. John Black, Executive Director, Smyrna/Rutherford County Airport, 278 Doug Warpoole Road, Smyrna, Tennessee 37167.

**FOR FURTHER INFORMATION CONTACT:** Mr. Michael Thompson, Program Manager, Federal Aviation Administration, Memphis Airports District Office, 2862 Business Park Drive, Building G, Memphis, TN 38118. The application may be reviewed in person at this same location, by appointment.

**SUPPLEMENTARY INFORMATION:** The FAA proposes to rule and invites public comment on the request to release property at the Smyrna/Rutherford County Airport, Smyrna, TN. Under the provisions of AIR 21 (49 U.S.C. 47107(h)(2)).

On August 29, 2008, the FAA determined that the request to release property at Smyrna/Rutherford County Airport submitted by the airport owner meets the procedural requirements of the Federal Aviation Administration. The FAA may approve the request, in whole or in part, no later than October 17, 2008.

*The following is a brief overview of the request:*

The Smyrna/Rutherford County Airport Authority, owners of the Smyrna/Rutherford County Airport, are proposing the release of approximately 15.65 acres of airport property so the property can be sold to the Tennessee Air National Guard. The aeronautical use of the property will remain unchanged.

Any person may inspect, by appointment, the request in person at the FAA office listed above under **FOR FURTHER INFORMATION CONTACT**.

In addition, any person may, upon appointment and request, inspect the request, notice and other documents germane to the request in person at the Tennessee Department of Transportation, Division of Aeronautics or the Smyrna/Rutherford County Airport.

Issued in Memphis, TN, on August 29, 2008.

**Phillip J. Braden,**

*Manager, Memphis Airports District Office, Southern Region.*

[FR Doc. E8–21515 Filed 9–16–08; 8:45 am]

**BILLING CODE 4910–13–M**

## DEPARTMENT OF TRANSPORTATION

### Federal Aviation Administration

### Ninth Joint Meeting, RTCA Special Committee 205IEUROCAE Working Group 71: Software Considerations in Aeronautical Systems Fourth Joint Plenary Meeting

**AGENCY:** Federal Aviation Administration (FAA), DOT.

**ACTION:** Notice of RTCA Special Committee 205/EUROCAE Working Group 71 meeting.

**SUMMARY:** The FAA is issuing this notice to advise the public of a meeting of RTCA Special Committee 205IEUROCAE Working Group 71: Software Considerations in Aeronautical Systems.

**DATES:** The meeting will be held November 17–21, 2008, from 8:30 a.m.–5:30 p.m.

**ADDRESSES:** The meeting will be held at Phoenix Sky Harbor Airport, 4300 East Washington, Phoenix, Arizona 85034.

**FOR FURTHER INFORMATION CONTACT:** (1) RTCA Secretariat, 1828 L Street, NW., Suite 805, Washington, DC 20036; telephone (202) 833–9339; fax (202) 833–9434; Web site *http://www.rtca.org*; (2) Hotel Front Desk: (602) 273–7778; fax (602) 275–5616.

**SUPPLEMENTARY INFORMATION:** Pursuant to section 10(a)(2) of the Federal Advisory Committee Act (Pub. L. 92–463, 5 U.S.C., Appendix 2), notice is hereby given for a Special Committee 205/EUROCAE Working Group 71 meeting. The agenda will include:

November 17:

- Opening Plenary Session (Welcome and Introductory Remarks, Review of Meeting Agenda and Previous Minutes).
- Reports of Sub-Group Activity Since January 2008.
- Other Committee/Other Documents Interfacing Personnel Reports (CAST, Unmanned Aircraft Systems, Security, WG–63/SAE S–18).
- Plenary Text Acceptance (for papers posted, commented on and reworked prior to Plenary).
- Sub-Group Break Out Sessions.
- Executive Committee and SG Chairs/Secretaries Meeting.

November 18:

- Sub-Group Break Out Sessions.
- Mandatory Paper Reading Sessions.
- Executive Committee and SG Chairs/Secretaries Meeting.

November 19:

- IP Comment Reply & Sub-Group Break Out Sessions.
- Plenary Text Acceptance (for papers posted, commented on and reworked prior to Plenary).

- Sub-Group Break Out Sessions.
- CAST Meeting (Close of Day).
- Executive Committee and SC Chairs/Secretaries Meeting.

November 20:

- Sub-Group Break Out Sessions.
- Mandatory Paper Reading Session.
- Executive Committee and SC Chairs/Secretaries Meeting.

November 21:

- IP Comment Reply & Sub-Group Break Out Sessions.

Plenary Text Approval (reworked and late posted papers).

- SGI: SCWG Document Integration Sub-Group.
- SG2: Issue & Rationale Sub-Group.
- SG3: Tool Qualification Sub-Group.
- SG4: Model Based Design and Verification Sub-Group.
- SG5: Object Oriented Technology Sub-Group.
- SG6: Formal Methods Sub-Group.
- SG7: Special Considerations Sub-Group.

Closing Plenary Session (Other Business, Date and Place of Next Meeting, Meeting Evaluation, Adjourn).

Attendance is open to the interested public but limited to space availability. With the approval of the chairmen, members of the public may present oral statements at the meeting, persons wishing to present statements or obtain information should contact the person listed in the **FOR FURTHER INFORMATION CONTACT** section. Members of the public may present a written statement to the committee at any time.

Issued in Washington, DC, on September 9, 2008.

**Robert L. Bostiga,**

*RTCA Advisory Committee (Acting).*

[FR Doc. E8–21510 Filed 9–16–08; 8:45 am]

**BILLING CODE 4910–13–M**

## DEPARTMENT OF TRANSPORTATION

### Federal Aviation Administration

### First Meeting, Special Committee 213/EUROCAE: Enhanced Flight VisionSystems/Synthetic Vision Systems (EFVS/SVS), EUROCAE Working Group 79(WG–79)

**AGENCY:** Federal Aviation Administration (FAA), DOT.

**ACTION:** Notice of RTCA Special Committee 213/EUROCAE, Enhanced Flight VisionSystems/Synthetic Vision Systems (EFVS/SVS), EUROCAE Working Group 79 (WG 79).

**SUMMARY:** The FAA is issuing this notice to advise the public of a first meeting of RTCA Special Committee 213, Standards for Air Traffic Data Communication Services.

**DATES:** The meeting will be held September 30–October 2, 2008 from 9 a.m.–5 p.m.

**ADDRESSES:** The meeting will be held at Thales Avionics, Rue Toussaint Catros 33187 Le Haillian France (next to Bordeaux Airport).

**SUPPLEMENTARY INFORMATION:** Pursuant to section 10(a)(2) of the Federal Advisory Committee Act (Pub. L. 92–463, 5 U.S.C., Appendix 2), notice is hereby given for a Special Committee 213 meeting. The agenda will include:

September 30:

- Opening Plenary Session (Welcome, Introductions, and Agenda Review) Review and approve SC–213/WG–79 Terms of Reference
- General objectives of this meeting: Approve MASPS; Develop Advanced Vision System CONOPS, follow-on dates
- Review and approve SC–213 Plenary Session 6 meeting minutes.
- Review agenda for document approval
- Presentations: European Airworthiness and Operating Criteria
- Afternoon work session as required, with end goal of having a completed document to present to the committee for approval to proceed
- Thales Demonstration

October 1:

- Continuation of meeting to discuss MASPS and Advanced Vision System CONOPS

October 2:

- Conclude discussion of Advanced Vision System CONOPS
- Next meeting dates and locations
- Feedback
- Review of Action Items
- Closing Plenary Session (Other Business, Date and Place of Next Meeting, Meeting Evaluation, Adjourn)

Attendance is open to the interested public but limited to space availability. With the approval of the chairmen, members of the public may present oral statements at the meeting. Persons wishing to present statements or obtain information should contact the person listed in the **FOR FURTHER INFORMATION CONTACT** section.

Members of the public may present a written statement to the committee at any time.

Issued in Washington, DC, on September 9, 2008.

**Robert L. Bostiga,**

*RTCA Advisory Committee (Acting).*

[FR Doc. E8–21511 Filed 9–16–08; 8:45 am]

**BILLING CODE 4910–13–M**

## DEPARTMENT OF TRANSPORTATION

### Federal Highway Administration

### Notice of Final Federal Agency Actions on Proposed Highway in Pennsylvania

**AGENCY:** Federal Highway Administration (FHWA), DOT.

**ACTION:** Notice of limitation on claims for judicial review of actions by FHWA.

**SUMMARY:** This notice announces actions taken by the FHWA and other Federal agencies that are final within the meaning of 23 U.S.C. 139(l)(1). The actions relate to a proposed highway project, Southern Beltway project, U.S. 22 to I–79 in Allegheny and Washington Counties, Pennsylvania, and those actions grant licenses, permits, and approvals for the project.

**DATES:** By this notice, the FHWA is advising the public of final agency actions subject to 23 U.S.C. 139(l)(1). A claim seeking judicial review of the Federal agency actions on the highway project will be barred unless the claim is filed on or before [March 17; 180 days after publication in the **Federal Register**]. If the Federal law that authorizes judicial review of a claim provides a time period of less than 180 days for filing such claim, then that shorter time period still applies.

**FOR FURTHER INFORMATION CONTACT:** Karyn Vandervoort, Environmental Program Manager, Federal Highway Administration, 228 Walnut Street, Room 508, Harrisburg, PA 17101–1720, between 8 a.m. and 4 p.m., (717) 221–2276, *karyn.vandervoort@fhwa.dot.gov* or David Willis, Environmental Manager, Pennsylvania Turnpike Commission, P.O. Box 67676, Harrisburg, PA 17106–7676 between 9 a.m. and 3 p.m., (717) 939–9551, *dwillis@paturnpike.com.*

**SUPPLEMENTARY INFORMATION:** Notice is hereby given that the FHWA have taken final agency actions by issuing licenses, permits, and approvals for the following highway project in the Commonwealth of Pennsylvania: A four-lane, limited access, tolled highway extending approximately 13.3 miles from U.S. 22 at the completed Findlay Connector (Turnpike 576) in Allegheny County, Pennsylvania, southeast to the I–79 in Cecil Township, Washington County. The highway will improve access to neighborhoods and economic redevelopment areas; and improve major highway linkages. The actions by the Federal agencies, and the laws under which such actions were taken, are described in the Final Environmental Impact Statement (FEIS) for the project, approved on September

29, 2006, in the FHWA Record of Decision (ROD) issued on September 3, 2008, and in other documents in the FHWA administrative record. The FEIS, ROD, and other documents in the FHWA administrative record file are available by contacting the FHWA or the Pennsylvania Turnpike Commission at the addresses provided above. The FHWA ROD can be viewed and downloaded from the project Web site at *http://www.paturnpike.com.*

This notice applies to all Federal agency decisions as of the issuance date of this notice and all laws under which such actions were taken, including but not limited to:

1. National Environmental Policy Act (NEPA) [42 U.S.C. 4321–4351].
2. Federal-Aid Highway Act [23 U.S.C. 109].
3. Section 4(f) of the Department of Transportation Act of 1966 [49 U.S.C. 303].
4. Clean Air Act, 42 U.S.C. 7401–7671(q).
5. Section 106 of the National Historic Preservation Act of 1966, as amended [16 U.S.C. 470(f) *et seq.*]
6. Endangered Species Act [16 U.S.C. 1531–1544 and Section 1536].
7. Clean Water Act (Section 404, Section 401, Section 319) [33 U.S.C. 1251–1377].
8. Executive Orders 11990 (Protection of Wetlands); 11988 (Floodplain Management); and 12898 (Federal Actions to Address Environmental Justice in Minority Populations and Low Income Populations).

(Catalog of Federal Domestic Assistance Program Number 20.205, Highway Planning and Construction. The regulations implementing Executive Order 12372 regarding intergovernmental consultation on Federal programs and activities apply to this program.)

**Authority:** 23 U.S.C. 139(l)(1).

Issued on: September 8, 2008.

**Renee Sigel,**

*Division Administrator, Harrisburg.*

[FR Doc. E8–21412 Filed 9–16–08; 8:45 am]

BILLING CODE 4910–22–M

## DEPARTMENT OF TRANSPORTATION

### Maritime Administration

**[Docket Number: 2008 0087]**

### Reports, Forms and Recordkeeping Requirements; Agency Information Collection Activity Under OMB Review

**AGENCY:** Maritime Administration, DOT.

**ACTION:** Notice and request for comments.

**SUMMARY:** In compliance with the Paperwork Reduction Act of 1995, this notice announces that the Information Collection abstracted below has been forwarded to the Office of Management and Budget (OMB) for review and approval. The nature of the information collection is described as well as its expected burden. The **Federal Register** Notice with a 60-day comment period soliciting comments on the following collection of information was published on March 21, 2008. No comments were received.

**DATES:** Comments must be submitted on or before October 17, 2008.

**FOR FURTHER INFORMATION CONTACT:** Jean McKeever, Maritime Administration, 1200 New Jersey Avenue, SE., Washington, DC 20590. Telephone: (202) 366–5737; or e-mail: *jean.mckeever@dot.gov.* Copies of this collection also can be obtained from that office.

**SUPPLEMENTARY INFORMATION:**

**Maritime Administration (MARAD)**

*Title:* Application for Construction Reserve Fund and Annual Statements.

*OMB Control No.:* 2133–0032.

*Type of Request:* Extension of currently approved collection.

*Affective Public:* Owners or operators in the domestic or foreign commerce.

*Forms:* None.

*Abstract:* This information collection consists of an application required for all citizens who own and operate vessels in the U.S. foreign or domestic commerce and desire tax benefits under the Construction Reserve Fund (CRF) program. The annual statement sets forth a detailed analysis of the status of the CRF when each tax return is filed.

*Annual Estimated Burden Hours:* 153 hours.

*Addressee:* Send comments to the Office of Information and Regulatory Affairs, Office of Management and Budget, 725 17th Street, NW., Washington, DC 20503, Attention: MARAD Desk Officer.

Comments are invited on: Whether the proposed collection of information is necessary for the proper performance of the functions of the agency, including whether the information will have practical utility; the accuracy of the agency's estimate of the burden of the proposed information collection; ways to enhance the quality, utility and clarity of the information to be collected; and ways to minimize the burden of the collection of information on respondents, including the use of automated collection techniques or other forms of information technology. A comment to OMB is best assured of having its full effect, if OMB receives it within 30 days of publication.

Dated: September 11, 2008.

By the Order of the Maritime Administrator.

**Leonard Sutter,**

*Secretary, Maritime Administration.*

[FR Doc. E8–21697 Filed 9–16–08; 8:45 am]

BILLING CODE 4910–81–P

## DEPARTMENT OF TRANSPORTATION

### National Highway Traffic Safety Administration

**[Docket No. NHTSA–2008–0144]**

### Notice of Receipt of Petitions for Decision That Nonconforming 1997–2001 Jeep Cherokee Multipurpose Passenger Vehicles Are Eligible for Importation

**AGENCY:** National Highway Traffic Safety Administration, DOT.

**ACTION:** Notice of receipt of petitions for decision that nonconforming 1997–2001 Jeep Cherokee multipurpose passenger vehicles are eligible for importation.

**SUMMARY:** This document announces receipt by the National Highway Traffic Safety Administration (NHTSA) of two petitions for a decision that certain 1997–2001 Jeep Cherokee multipurpose passenger vehicles (MPVs) that were not originally manufactured to comply with all applicable Federal motor vehicle safety standards (FMVSS) are eligible for importation into the United States because (1) they are substantially similar to vehicles that were originally manufactured for sale in the United States and that were certified by their manufacturer as complying with the safety standards, and (2) they are capable of being readily altered to conform to the standards.

**DATES:** The closing date for comments on the petitions is October 17, 2008.

**ADDRESSES:** Comments should refer to the docket and notice numbers above and be submitted by any of the following methods:

- *Federal eRulemaking Portal:* Go to *http://www.regulations.gov.* Follow the online instructions for submitting comments.
- *Mail:* Docket Management Facility: U.S. Department of Transportation, 1200 New Jersey Avenue, SE., West Building Ground Floor, Room W12–140, Washington, DC 20590–0001
- *Hand Delivery or Courier:* West Building Ground Floor, Room W12–140, 1200 New Jersey Avenue, SE., between 9 a.m. and 5 p.m. ET, Monday through Friday, except Federal holidays.

• *Fax:* 202–493–2251

*Instructions:* Comments must be written in the English language, and be no greater than 15 pages in length, although there is no limit to the length of necessary attachments to the comments. If comments are submitted in hard copy form, please ensure that two copies are provided. If you wish to receive confirmation that your comments were received, please enclose a stamped, self-addressed postcard with the comments. Note that all comments received will be posted without change to *http://www.regulations.gov*, including any personal information provided. Please see the Privacy Act heading below.

*Privacy Act:* Anyone is able to search the electronic form of all comments received into any of our dockets by the name of the individual submitting the comment (or signing the comment, if submitted on behalf of an association, business, labor union, etc.). You may review DOT's complete Privacy Act Statement in the **Federal Register** published on April 11, 2000 (65 FR 19477–78).

*How to Read Comments submitted to the Docket:* You may read the comments received by Docket Management at the address and times given above. You may also view the documents from the Internet at *http://www.regulations.gov.* Follow the online instructions for accessing the dockets. The docket ID number and title of this notice are shown at the heading of this document notice. Please note that even after the comment closing date, we will continue to file relevant information in the Docket as it becomes available. Further, some people may submit late comments. Accordingly, we recommend that you periodically search the Docket for new material.

**FOR FURTHER INFORMATION CONTACT:** Coleman Sachs, Office of Vehicle Safety Compliance, NHTSA (202–366–3151).

**SUPPLEMENTARY INFORMATION:**

## Background

Under 49 U.S.C. 30141(a)(1)(A), a motor vehicle that was not originally manufactured to conform to all applicable FMVSS shall be refused admission into the United States unless NHTSA has decided that the motor vehicle is substantially similar to a motor vehicle originally manufactured for sale in the United States, certified under 49 U.S.C. 30115, and of the same model year as the model of the motor vehicle to be compared, and is capable of being readily altered to conform to all applicable FMVSS.

Petitions for eligibility decisions may be submitted by either manufacturers or importers who have registered with NHTSA pursuant to 49 CFR part 592. As specified in 49 CFR 593.7, NHTSA publishes notice in the **Federal Register** of each petition that it receives, and affords interested persons an opportunity to comment on the petition. At the close of the comment period, NHTSA decides, on the basis of the petition and any comments that it has received, whether the vehicle is eligible for importation. The agency then publishes this decision in the **Federal Register**.

Auto Boutique, Ltd., of Costa Mesa, California (ABL) (Registered Importer 08–356), petitioned NHTSA to decide whether 1997–2001 Japanese market right-hand drive (RHD) Jeep Cherokee MPVs are eligible for importation into the United States. Shortly after ABL's petition was filed, U.S. Drive Right (USDR), of Spring Arbor, Michigan (Registered Importer 08–355) separately petitioned NHTSA to decide whether 1997 and 1998 RHD and left-hand drive (LHD) Jeep Cherokee MPVs are eligible for importation into the United States. Because the two petitions both pertain to the 1997 and 1998 RHD Jeep Cherokee MPVs, NHTSA is soliciting comments on both petitions in this notice. The vehicles that ABL and USDR believe to be substantially similar are corresponding model year Jeep Cherokee MPVs that were manufactured for sale in the United States and certified by their manufacturer as conforming to all applicable FMVSS.

Both petitioners stated that they compared corresponding year non-U.S. certified Jeep Cherokee MPVs to their U.S.-certified counterparts, and found the vehicles to be substantially similar with respect to compliance with most FMVSS.

ABL submitted information with its petition intended to demonstrate that non-U.S. certified 1997–2001 RHD Jeep Cherokee MPVs, as originally manufactured, conform to many FMVSS in the same manner as their U.S. certified counterparts, or are capable of being readily altered to conform to those standards.

Specifically, ABL claims that non-U.S. certified 1997–2001 RHD Jeep Cherokee MPVs are identical to their U.S.-certified counterparts with respect to compliance with Standard Nos. 101 *Controls and Displays*, 102 *Transmission Shift Lever Sequence, Starter Interlock, and Transmission Braking Effect*, 103 *Windshield Defrosting and Defogging Systems*, 104 *Windshield Wiping and Washing Systems*, 105 *Hydraulic and Electric Brake Systems*, 106 *Brake Hoses*, 108 *Lamps, Reflective Devices and Associated Equipment*, 111 *Rearview Mirrors*, 113 *Hood Latch System*, 114 *Theft Protection*, 116 *Motor Vehicle Brake Fluids*, 118 *Power-Operated Window, Partition, and Roof Panel Systems*, 119 *New Pneumatic Tires for Vehicles Other than Passenger Cars*, 120 *Tire Selection and Rims for Motor Vehicles Other than Passenger Cars*, 124 *Accelerator Control Systems*, 201 *Occupant Protection in Interior Impact*, 202 *Head Restraints*, 204 *Steering Control Rearward Displacement*, 205 *Glazing Materials*, 206 *Door Locks and Door Retention Components*, 207 *Seating Systems*, 208 *Occupant Crash Protection*, 209 *Seat Belt Assemblies*, 210 *Seat Belt Assembly Anchorages*, 212 *Windshield Mounting*, 214 *Side Impact Protection*, 216 *Roof Crush Resistance*, 219 *Windshield Zone Intrusion*, 225 *Child Restraint Anchorage Systems*, 301 *Fuel System Integrity*, and 302 *Flammability of Interior Materials*.

ABL additionally states that a vehicle identification plate must be affixed to the vehicles near the left windshield post to meet the requirements of 49 CFR part 565.

USDR submitted information with its petition intended to demonstrate that non-U.S. certified 1997 and 1998 RHD and LHD Jeep Cherokee MPVs, as originally manufactured, conform to many FMVSS in the same manner as their U.S. certified counterparts, or are capable of being readily altered to conform to those standards.

Specifically, the USDR claims that non-U.S. certified 1997 and 1998 RHD and LHD Jeep Cherokee MPVs are identical to their U.S.-certified counterparts with respect to compliance with Standard Nos. 102 *Transmission Shift Lever Sequence, Starter Interlock, and Transmission Braking Effect*, 103 *Windshield Defrosting and Defogging Systems*, 104 *Windshield Wiping and Washing Systems*, 105 *Hydraulic and Electric Brake Systems*, 106 *Brake Hoses*, 111 *Rearview Mirrors*, 113 *Hood Latch System*, 114 *Theft Protection*, 116 *Motor Vehicle Brake Fluids*, 118 *Power-Operated Window, Partition, and Roof Panel Systems*, 119 *New Pneumatic Tires for Vehicles Other than Passenger Cars*, 124 *Accelerator Control Systems*, 201 *Occupant Protection in Interior Impact*, 202 *Head Restraints*, 204 *Steering Control Rearward Displacement*, 205 *Glazing Materials*, 206 *Door Locks and Door Retention Components*, 207 *Seating Systems*, 209 *Seat Belt Assemblies*, 210 *Seat Belt Assembly Anchorages*, 212 *Windshield Mounting*, 214 *Side Impact Protection*, 216 *Roof Crush Resistance*, 219 *Windshield Zone Intrusion*, 301 *Fuel*

*System Integrity*, and 302 *Flammability of Interior Materials*.

USDR also contends that the vehicles are capable of being readily altered to meet the following standards, in the manner indicated:

Standard No. 101 *Controls and Displays*: Replacement or conversion of the speedometer to read in miles per hour.

Standard No. 108 *Lamps, Reflective Devices and Associated Equipment*: Installation of U.S.-model (1) headlamps; (2) front and rear mounted side marker lamps; (3) front and rear mounted side reflex reflectors; (4) rear mounted reflex reflectors; and (5) tail lamps.

Standard No. 120 *Tire Selection and Rims for Motor Vehicles Other than Passenger Cars*: Installation of a tire information placard.

Standard No. 208 *Occupant Crash Protection*: Inspection of all vehicles and replacement of any non-U.S.-model seat belt audible warning system and telltale components with U.S. model components on vehicles that are not already so equipped.

USDR states that the vehicle's restraint system components include airbags and combination lap and shoulder belts at the front outboard designated seating positions and combination lap and shoulder belts at the rear outboard designated seating positions. USDR also states that the rear center seating position is equipped with a lap belt.

USDR additionally states that a vehicle identification plate must be affixed to the vehicles near the left windshield post to meet the requirements of 49 CFR part 565.

All comments received before the close of business on the closing date indicated above will be considered, and will be available for examination in the docket at the above addresses both before and after that date. To the extent possible, comments filed after the closing date will also be considered. Notice of final action on the petitions will be published in the **Federal Register** pursuant to the authority indicated below.

**Authority:** 49 U.S.C. 30141(a)(1)(A) and (b)(1); 49 CFR 593.8; delegations of authority at 49 CFR 1.50 and 501.8.

Issued on: September 11, 2008.

**Claude H. Harris,**

*Director, Office of Vehicle Safety Compliance.*

[FR Doc. E8–21637 Filed 9–16–08; 8:45 am]

BILLING CODE 4910–59–P

## DEPARTMENT OF TRANSPORTATION

### Pipeline and Hazardous Materials Safety Administration

### Office of Hazardous Materials Safety; Notice of Applications for Modification of Special Permit

**AGENCY:** Pipeline and Hazardous Materials Safety Administration (PHMSA), DOT.

**ACTION:** List of Applications for Modification of Special Permit.

**SUMMARY:** In accordance with the procedures governing the application for, and the processing of, special permits from the Department of Transportation's Hazardous Material Regulations (49 CFR Part 107, Subpart B), notice is hereby given that the Office of Hazardous Materials Safety has received the application described herein. This notice is abbreviated to expedite docketing and public notice. Because the sections affected, modes of transportation, and the nature of application have been shown in earlier **Federal Register** publications, they are not repeated here. Request of modifications of special permits (*e.g.* to provide for additional hazardous materials, packaging design changes, additional mode of transportation, etc.) are described in footnotes to the application number. Application numbers with the suffix ''M'' demote a modification request. There applications have been separated from the new application for special permits to facilitate processing.

**DATES:** Comments must be received on or before October 2, 2008.

**ADDRESS COMMENTS TO:** Record Center, Pipeline and Hazardous Materials Safety Administration, U.S. Department of Transportation, Washington, DC 20590.

Comments should refer to the application number and be submitted in triplicate. If confirmation of receipt of comments is desired, include a self-addressed stamped postcard showing the special permit number.

**FOR FURTHER INFORMATION CONTACT:** Copies of the applications are available for inspection in the Records Center, East Building, PHH–30, 1200 New Jersey Avenue Southeast, Washington DC or at *http://dms.dot.gov.*

This notice of receipt of applications for modification of special permit is published in accordance with Part 107 of the Federal hazardous materials transportation law (49 U.S.C. 5117(b); 49 CFR 1.53(b)).

Issued in Washington, DC, on September 10, 2008.

**Delmer F. Billings,**

*Director, Office of Hazardous Materials, Special Permits and Approvals.*

| Application number | Docket number | Applicant | Regulation(s) affected | Nature of special permit thereof |
|---|---|---|---|---|
| **Modification Special Permits** | | | | |
| 11516–M ..... | | Bridgeview Aerosol, LLC Bridgeview, IL. | 49 CFR 173.306(a)(3) ..... | To modify the special permit to authorize an additional Division 2.2 material. |
| 11721–M ..... | | Coleman Company, Inc. The Maize, KS. | 49 CFR 178.65–4(c)(1) .... | To modify the special permit to authorize an additional Division 2.1 flammable gas. |
| 12412–M ..... | RSPA–00–6827 | Brenntag Southwest Sand Springs, OK. | 49 CFR 177.834(h); 172.203(a); 172.302(c). | To modify the special permit to allow residue to remain in hoses while in transportation. |
| 12574–M ..... | RSPA–00–8318 | Weldship Corporation Bethlehem, PA. | 49 CFR 172.302(c)(2),(3),(4),(5); Subpart F of Part 180. | To modify the special permit to conform with CGA in that only one pressure relief device is required for certain gases. |
| 14546–M ..... | PHMSA–07–28832 | Linde North America Inc. formerly BOC Gases) Murray Hill, NJ. | 49 CFR 180.209 ..... | To modify the special permit to remove the five year visual inspection requirement. |
| 14652–M ..... | PHMSA–08–0043 | Magnum Mud Equipment Co., Inc. Houma, LA. | 49 CFR 171.14(d)(4) ..... | To modify the special permit to authorize cargo vessel as an additional mode of transportation. |

| Application number | Docket number | Applicant | Regulation(s) affected | Nature of special permit thereof |
|---|---|---|---|---|
| 14754–M ..... | | Sierra Chemical Company Sparks, NV. | 49 CFR 178.3 ..... | To reissue the special permit originally issued on an emergency basis for the transportation in commerce of approximately 72,000 1-gallon polyethylene bottles that are transported under the provisions of DOT–SP 6614 except they have not been marked with the name or symbol of the bottle producer. |

[FR Doc. E8–21641 Filed 9–16–08; 8:45 am]

**BILLING CODE 4909–60–M**

## DEPARTMENT OF THE TREASURY

### Senior Executive Service; Departmental Offices Performance Review Board

**AGENCY:** Treasury Department.

**ACTION:** Notice of members of the Departmental Offices Performances Review Board.

**SUMMARY:** Pursuant to 5 U.S.C. 4314(c)(4), this notice announces the appointment of members of the Departmental Offices Performance Review Board (PRB). The purpose of this Board is to review and make recommendations concerning proposed performance appraisals, ratings, bonuses and other appropriate personnel actions for incumbents of SES positions in the Departmental Offices, excluding the Legal Division. The Board will perform PRB functions for other bureau positions if requested.

*Composition of Departmental Offices PRB:* The Board shall consist of at least three members. In the case of an appraisal of a career appointee, more than half the members shall consist of career appointees. The names and titles of the Board members are as follows:

Carfine, Kenneth E., Fiscal Assistant Secretary
Duffy, Michael D., Deputy Assistant Secretary/Chief Information Officer
Foster, Wesley T., Deputy Assistant Secretary (Management and Budget)
Fuller, Reese H., Advanced Counterfeit Deterrence Program Director.
Gerardi, Geraldine A., Director for Business and International Taxation
Glaser, Daniel L., Deputy Assistant Secretary (Terrorist Financing and Financial Crimes)
Granat, Rochelle F., Deputy Assistant Secretary for Human Resources and Chief Human Capital Officer
Daly, Nova James, Deputy Assistant Secretary (Investment Security)
Dick, Denise, White House Liaison
Grippo, Gary E., Deputy Assistant Secretary (Fiscal Operations and Policy)
Hammerle, Barbara C., Deputy Director, Office of Foreign Assets Control
Hampl, Eric E., Director, Executive Office of Asset Forfeiture
Hastings, Charles R., Deputy Chief Human Capital Officer
Jaskowiak, Mark M., Director, Office of Specialized Development
Larue, Pamela J., Departmental Budget Director
Lee, Nancy, Deputy Assistant Secretary (Eurasia and Middle East)
Mathiasen, Karen V., Director, Office of Financial Reconstruction and Stabilization
McDonald, William L., Deputy Assistant Secretary (Technical Assistance Policy)
McLaughlin, Brookly, Deputy Assistant Secretary (Public Affairs)
Mendelsohn, Howard S., Deputy Assistant Secretary (Intelligence & Analysis)
Norton, Jeremiah O., Deputy Assistant Secretary (Financial Institutions and Government Sponsored Enterprise Policy)
Ostrowski, Nancy, Director, Office of D.C. Pensions
Skud, Timothy E., Deputy Assistant Secretary (Tax, Trade and Tariff Policy)
Smith, Taiya, Deputy Chief of Staff and Executive Secretary
Sobel, Mark D., Deputy Assistant Secretary (International Monetary and Financial Policy)
Szubin, Adam J., Director, Office of Foreign Assets Control
Tvardek, Steven F., Director, Office of Trade Finance
Warren, Mark E., Deputy Assistant Secretary for Legislative Affairs (Tax and Budget)
Warthin, Thomas W., Director, Office of Financial Services Negotiations
Wilkinson, James R., Chief of Staff
Worth, John D., Director, Office of Microeconomic Analysis

**DATES:** *Effective Date:* Membership is effective on the date of this notice.

**FOR FURTHER INFORMATION CONTACT:** Christine Nalli, Supervisory Human Resources Specialist, 1500 Pennsylvania Avenue, NW., ATTN: National Press Building, Room 200, Washington, DC 20220, Telephone: 202–622–1105.

This notice does not meet the Department's criteria for significant regulations.

Dated: September 9, 2008.

**Rhonda Coachman-Steward,**

*Director, Office of Human Resources.*

[FR Doc. E8–21658 Filed 9–16–08; 8:45 am]

**BILLING CODE 4811–42–P**

## DEPARTMENT OF THE TREASURY

### Fiscal Service

### Financial Management Service Proposed Collection of Information: Annual Letters—Certificates of Authority (A) and Admitted Reinsurer (B)

**AGENCY:** Financial Management Service, Fiscal Service, Treasury.

**ACTION:** Notice and Request for comments.

**SUMMARY:** The Financial Management Service, as part of its continuing effort to reduce paperwork and respondent burden, invites the general public and other Federal agencies to take this opportunity to comment on a continuing information collection. By this notice, the Financial Management Service solicits comments concerning the ''Annual Letters—Certificates of Authority (A) and Admitted Reinsurer (B).''

**DATES:** Written comments should be received on or before November 17, 2008.

**ADDRESSES:** Direct all written comments to Financial Management Service, 3700 East West Highway, Records and Information Management Program Staff, Room 135, Hyattsville, Maryland 20782.

**FOR FURTHER INFORMATION CONTACT:** Requests for additional information should be directed to Rose Miller, Surety Bond Branch, 3700 East West Highway, Room 632F, Hyattsville, MD 20782, (202) 874–6850.

**SUPPLEMENTARY INFORMATION:** Pursuant to the Paperwork Reduction Act of 1995 (44 U.S.C. 3506(c)(2)(A)), the Financial Management Service solicits comments on the collection of information described below:

*Title:* Annual Letters—Certificates of Authority (A) and Admitted Reinsurer (B).

*OMB Number:* 1510–0057.

*Form Number:* None.

*Abstract:* This letter is used to collect information from companies to determine their acceptability and solvency to write or reinsure federal surety bonds.

*Current Actions:* Extension of a currently approved collection.

*Type of Review:* Regular.

*Affected Public:* Business or other for-profit.

*Estimated Number of Respondents:* 344.

*Estimated Time per Respondent:* 39.75 hours.

*Estimated Total Annual Burden Hours:* 13,674.

*Comments:* Comments submitted in response to this notice will be summarized and/or included in the request for Office of Management and Budget approval. All comments will become a matter of public record. *Comments are invited on:* (a) Whether the collection of information is necessary for the proper performance of the functions of the agency, including whether the information shall have practical utility; (b) the accuracy of the agency's estimate of the burden of the collection of information; (c) ways to enhance the quality, utility, and clarity of the information to be collected; (d) ways to minimize the burden of the collection of information on respondents, including through the use of automated collection techniques or other forms of information technology; and (e) estimates of capital or start-up costs and costs of operation, maintenance and purchase of services to provide information.

**Scott Johnson,**

*Assistant Commissioner, Management.*

[FR Doc. E8–21612 Filed 9–16–08; 8:45 am]

BILLING CODE 4810–35–M

Federal Register

Wednesday,
September 17, 2008

# Part II

# Department of the Treasury

## Internal Revenue Service

## 26 CFR Parts 1 and 602
## Unified Rule for Loss on Subsidiary Stock; Final Rule

**DEPARTMENT OF THE TREASURY**

**Internal Revenue Service**

**26 CFR Parts 1 and 602**

**[TD 9424]**

**RIN 1545–BB61**

## Unified Rule for Loss on Subsidiary Stock

**AGENCY:** Internal Revenue Service (IRS), Treasury.

**ACTION:** Final regulations and removal of temporary regulations.

**SUMMARY:** This document contains final regulations under sections 358, 362(e)(2), and 1502 of the Internal Revenue Code (Code). The regulations apply to corporations filing consolidated returns, and corporations that enter into certain tax-free reorganizations. The regulations provide rules for determining the tax consequences of a member's transfer (including by deconsolidation and worthlessness) of loss shares of subsidiary stock. In addition, the regulations provide that section 362(e)(2) generally does not apply to transactions between members of a consolidated group. Finally, the regulations conform or clarify various provisions of the consolidated return regulations, including those relating to adjustments to subsidiary stock basis.

**DATES:** *Effective Date:* These regulations are effective on September 17, 2008.

*Applicability Date:* For dates of applicability, see §§ 1.358–6(f)(3), 1.1502–13(l)(1), 1.1502–19(h), 1.1502–21(h)(1)(iii), 1.1502–30(c), 1.1502–31(h)(1), 1.1502–32(h)(9), 1.1502–33(j)(1), 1.1502–35(j), 1.1502–36(h), 1.1502–75(l), 1.1502–80(a)(4), 1.1502–80(h), 1.1502–80(j), 1.1502–91(h)(2), and 1.1502–99(b)(4).

**FOR FURTHER INFORMATION CONTACT:** Marcie P. Barese at (202) 622–7790, Sean P. Duffley at (202) 622–7770, or Theresa Abell at (202) 622–7700 (none of the numbers are toll-free).

**SUPPLEMENTARY INFORMATION:**

### Paperwork Reduction Act

The collection of information contained in these final regulations has been reviewed and approved by the Office of Management and Budget in accordance with the Paperwork Reduction Act of 1995 (44 U.S.C. 3507(d)) under control number 1545–2096. The collection of information in these final regulations is in § 1.1502–36(e)(5). The collection of information is necessary to allow a corporation to redetermine basis under the basis redetermination rule when it sells all the stock of a subsidiary, to modify the application of the attribute reduction rule, to apply the Unified Loss Rule retroactively to certain intercompany transfers, and to reattribute a section 382 limitation.

An agency may not conduct or sponsor, and a person is not required to respond to, a collection of information unless it displays a valid control number.

Books or records relating to the collection of information must be retained as long as their contents may become material in the administration of any internal revenue law. Generally, tax returns and tax return information are confidential, as required by 26 U.S.C. 6103.

### Background

On January 23, 2007, the IRS and Treasury Department issued a notice of proposed rulemaking (REG–157711–02, 2007–8 IRB 537, 72 FR 2964) (January 2007 proposal) that included proposed regulations under § 1.1502–36 (Unified Loss Rule). The proposed Unified Loss Rule would implement aspects of the repeal of the General Utilities doctrine and address the duplication of loss by consolidated groups. The proposed Unified Loss Rule consisted of three principal rules that would apply when a member (M) transferred a loss share of stock of a subsidiary (S): A basis redetermination rule (that would reallocate investment adjustments to address both noneconomic and duplicated stock loss), a basis reduction rule (that would address noneconomic stock loss), and an attribute reduction rule (that would address duplicated loss).

In addition, the January 2007 proposal included proposed regulations under § 1.1502–13(e)(4) that would address the application of section 362(e)(2) to certain intercompany transactions. The January 2007 proposal also included proposed regulations that would make various technical and administrative revisions to other provisions of the consolidated return regulations and to regulations regarding stock basis following certain corporate restructuring transactions.

No public hearing regarding the proposed regulations was requested or held. Written, electronic, and oral comments responding to the notice of proposed rulemaking were received. After consideration of all the comments, these final regulations generally adopt the rules of the proposed regulations other than proposed § 1.1502–13(e)(4) and its related provisions. The significant comments and modifications are discussed in this preamble.

*1. The Unified Loss Rule*

A. General Comments

In general, commentators and practitioners have consistently described the provisions of the proposed Unified Loss Rule as reaching a fair and reasonable systemic balance. They have generally concurred with the major policy decisions reflected in the proposed regulations, including the retention of the loss limitation model, the rejection of a tracing approach, the application of the rule to built-in income, and the systemic prevention of loss duplication. However, commentators and practitioners have also consistently raised concerns regarding both the complexity of the proposed rules and the anticipated difficulty in compiling the data required to implement the proposed rules, especially those relating to transfers of stock of subsidiaries that hold stock in other subsidiaries.

The IRS and Treasury Department recognize that the proposed rules are complex. However, as recognized by commentators and practitioners, the complexity of the rules is a result of the balancing of benefits and burdens arising from the presumptions on which the rules are based. The IRS and Treasury Department are concerned, therefore, that simplifying the proposed rules would adversely impact the fundamental fairness the rules are intended to achieve. Nevertheless, careful consideration has been given to all simplifying suggestions, and they have been incorporated wherever possible.

The suggestions regarding the general application and operation of the rule, and the conclusions reached as to each, are set forth in this section A of this preamble. Suggestions relating to individual paragraphs of the Unified Loss Rule and to other regulations in the January 2007 proposal, including proposed § 1.1502–13(e)(4), and the conclusions reached as to each, are set forth in the following sections.

i. Order of Application of the Unified Loss Rule and Other Adjustments

The January 2007 proposal provided that the Unified Loss Rule would apply to a transfer of a share of subsidiary stock if, after giving effect to all applicable rules of law (other than the Unified Loss Rule), the share is a loss share. The provisions of the proposed Unified Loss Rule would then apply sequentially to adjust subsidiary stock basis and attributes. Any adjustments

required under the Unified Loss Rule would be given effect immediately before the transfer.

Commentators found the timing rules unclear, particularly as they related to the application of other provisions of the consolidated return regulations that also purport to apply immediately before a transaction. The IRS and Treasury Department have considered this comment and agree that there could be some uncertainty in this respect.

To address this concern, § 1.1502–36(a)(3)(i) of these final regulations provides that the Unified Loss Rule applies when a member transfers a share of subsidiary stock and, after taking into account the effects of all rules of law applicable as of the transfer, even those that would not be given effect until after the transfer, the share is a loss share. Such effects may be attributable to lower-tier dispositions and worthlessness, as well as to the application of the Unified Loss Rule. Although the determination of whether a transferred share is a loss share is made as of the transfer, the Unified Loss Rule as a whole applies, and any adjustments required under the Unified Loss Rule are given effect, immediately before the transfer.

When the Unified Loss Rule applies to a transfer, its individual provisions are each applied in order. Thus, as described in § 1.1502–36(a)(3)(i) of these final regulations, the general rule is that paragraph (b) applies first with respect to a transferred loss share (or shares). Then, if there is still a transfer of a loss share after the application of paragraph (b), paragraph (c) applies to the loss share (or shares). Finally, if there is still a transfer of a loss share after the application of paragraph (c), paragraph (d) applies with respect to that loss share (or shares). Section 1.1502–36(a)(3)(ii) provides detailed instruction regarding the order in which the individual provisions of the Unified Loss Rule apply if there are transfers at multiple tiers in the same transaction.

ii. Application of Unified Loss Rule to Nondeconsolidating Transfers

Several commentators have suggested that the final regulations include an election to defer basis recovery in the case of a nondeconsolidating transfer. Under such an election, a group could avoid applying the Unified Loss Rule to such transfers by shifting the basis of a transferred share (to the extent such basis exceeds the share's value) to other shares held by members. As a result, the group would forego any current loss, but the Unified Loss Rule would continue to be applicable to any subsequent transfer of loss shares of stock of that subsidiary.

The IRS and Treasury Department are concerned that such an election could cause significant administrative complexity. The IRS and Treasury Department are also concerned that such an election could cause substantial distortions that could adversely affect the treatment of subsequent deconsolidating transfers. For example, a basis shift resulting from such an election could significantly increase the disconformity amount of the retained shares, potentially causing a substantial and inappropriate reduction in the basis of the retained shares when they are ultimately transferred. Further, because this relief would only address transfers of minority interests, and the IRS and Treasury Department believe that such transfers reflect a small portion of subsidiary stock dispositions, the IRS and Treasury Department do not believe such a rule would give rise to any significant relief. Accordingly, this suggestion was not adopted.

Other suggestions were made that would apply special rules to nondeconsolidating transfers. The final regulations generally do not adopt special rules for nondeconsolidating transfers. The principal reasons are the complexity a dual system would create and the small number of transactions expected to be affected by such rules. In addition, the IRS and Treasury Department believe that taxpayers will typically be able to restructure nondeconsolidating transfers to avoid the application of the Unified Loss Rule, for example, by issuing subsidiary stock.

iii. Application of Unified Loss Rule to Deferred Recognition Transfers

The proposed regulations provided that all transfers of loss shares of subsidiary stock are immediately subject to the Unified Loss Rule when the stock is transferred, even if any loss recognized on the transfer would be deferred. The IRS and Treasury Department had concluded that the immediate application of the Unified Loss Rule was necessary to prevent the significant administrative burden of retroactively applying the Unified Loss Rule to members' bases in shares of subsidiary stock, and to the subsidiary's attributes, long after a stock sale.

Commentators questioned the need to apply the Unified Loss Rule to a transfer in which any loss that would be recognized would be deferred, citing as a model § 1.1502–20(a)(3) (deferring the application of § 1.1502–20, the Loss Disallowance Rule). Commentators also observed that single-entity principles seemed to suggest that an intercompany transfer is not an appropriate time to apply the Unified Loss Rule, urging that it would be more appropriate to apply the Unified Loss Rule to such a transfer when the intercompany item is taken into account.

The IRS and Treasury Department have considered these comments and are persuaded that single-entity principles would be furthered, and group income would be more clearly reflected, if the application of the Unified Loss Rule were coordinated with the intercompany transaction provisions in § 1.1502–13. Accordingly, under these final regulations, if a member transfers a share of subsidiary stock to another member and any gain or loss on the transfer is deferred under § 1.1502–13, the Unified Loss Rule applies to the transfer, or to any subsequent transfer of that share by a member, when the intercompany item is taken into account. At that time, the determination of whether the Unified Loss Rule applies and, if so, the consequences of its application are made by treating the buying and selling members as divisions of a single corporation. The final regulations also provide that appropriate adjustments will be made to intercompany item(s), any member's basis in the subsidiary's share, and/or the subsidiary's attributes in order to further the purposes of both the Unified Loss Rule and the intercompany transaction provisions in § 1.1502–13.

Notwithstanding this modification of the treatment of intercompany transfers, the IRS and Treasury Department continue to believe that the deferral of loss recognized on a sale of subsidiary stock should not, in general, defer the application of the Unified Loss Rule. One reason is that postponing the application of the Unified Loss Rule in transfers that are not intercompany transactions would likely make it much more difficult, and in some cases impossible, to obtain the information and make the determinations necessary to apply the rule. Another reason is that such an approach could require subsequent adjustments to attributes outside the consolidated group. Accordingly, these final regulations continue to apply the Unified Loss Rule to non-intercompany transfers of loss shares at the time the stock is transferred, even if any loss recognized on the transfer is subject to deferral.

These final regulations modify the definition of the term transfer to reflect both the general rule that the deferral of loss does not affect the determination of whether stock is transferred and the limited exception for intercompany transactions.

iv. Application of Unified Loss Rule to Liquidations Under Section 332

The proposed Unified Loss Rule provided that the term transfer generally includes transactions in which a member ceases to own subsidiary stock. However, the proposed regulations included an exception for section 381(a) transactions in which any member acquires assets of the subsidiary, provided that no gain or loss is recognized by member shareholders with respect to the subsidiary's stock. Commentators observed that this exclusion would apply to liquidations in which more than one member owns stock of the subsidiary and that, in such cases, upper-tier distortions could result because the basis redetermination rule would not apply.

The IRS and Treasury Department agree with this observation and are concerned with the potential for distortion and abuse. Accordingly, under the final regulations, a disposition of subsidiary stock in a liquidation to which section 332 applies is not excepted from the definition of a transfer if more than one member owns stock in the liquidating subsidiary. However, the final regulations provide that, in the case of a multiple-member section 332 liquidation, neither paragraph (c) (the basis reduction rule) nor paragraph (d) (the attribute reduction rule) will apply to the transfer. Thus, if more than one member owns stock in a subsidiary and those members dispose of the subsidiary stock in a section 332 liquidation of the subsidiary, the transaction is subject to the other provisions of the Unified Loss Rule, in particular the basis redetermination rule in § 1.1502–36(b).

v. Basis in Lower-Tier Stock

In formulating the proposed Unified Loss Rule, the IRS and Treasury Department believed that, by using information that taxpayers were otherwise required to create and maintain, the administrative burden on taxpayers would be minimal. However, commentators have uniformly expressed concern that taxpayers will find it costly and time-consuming, if not impossible, to obtain the subsidiary stock basis information needed to apply many of the provisions of the Unified Loss Rule. Particular concern has been expressed regarding the lower-tier subsidiary rules in the proposed basis reduction rule (proposed § 1.1502–36(c)) and the proposed attribute reduction rule (proposed § 1.1502–36(d)). The reasons cited include the widespread practice of determining stock basis only when necessary to determine a person's tax liability, complicated intercompany accounting rules that make stock basis determinations prone to error, and the frequent inability to obtain accurate historical basis information when acquiring companies with lower-tier subsidiaries.

To address this problem, several commentators have suggested modifying the proposed rules to apply solely based on the net inside attributes of lower-tier subsidiaries (the ''look-through'' approach). Those commentators have argued that information regarding inside attributes is much more regularly and reliably maintained and available than stock basis information.

The IRS and Treasury Department recognize that adopting a look-through approach would not only address the problem of inadequate stock basis data, it would also significantly simplify the application of the rules. However, the IRS and Treasury Department are concerned that a look-through approach could produce inappropriate results for groups transferring S stock if S holds stock of another subsidiary (S1) and S's basis in its S1 stock reflects unrecognized appreciation in S1's assets (built-in gain).

*Example.* P, the common parent of a consolidated group, transfers $100 to S in exchange for S's sole outstanding share of stock. S purchases the sole outstanding share of S1 stock for $100 when S1 holds one asset with a basis of $0 and a value of $100. S earns $100, increasing P's basis in S to $200. S1's asset declines in value to $0. P sells its S share to X, an unrelated person, for $100, recognizing a loss of $100. Under the basis reduction rule as proposed, P's basis in S stock is reduced by the lesser of S's disconformity amount and S's net positive adjustment. S's disconformity amount is $0, the excess of P's $200 basis in the S share over S's net inside attribute amount ($200, the sum of S's $100 cash and its $100 basis in the S1 share, which is not treated as reduced under the tentative reduction rule because there were no investment adjustments applied to the basis of the S1 share). Accordingly, although S had a $100 net positive adjustment, there is no reduction to P's basis in S stock and so P's $100 loss on the S stock is allowed. However, because the stock loss is duplicated in S's attributes, the attribute reduction rule will apply to eliminate S's inside loss.

If a look-through approach were adopted, however, S's basis in its S1 share would be disregarded and S's disconformity amount would be $100 (the excess of P's $200 basis in its S share over S's $100 net inside attribute amount, computed as the sum of S's $100 cash and S1's $0 basis in its asset). As a result, P's basis in its S share would be reduced by $100, the lesser of S's $100 disconformity amount and S's $100 net positive adjustment. Although S would retain its $100 basis in its S1 share, P would recognize no loss on its sale of the S stock. Thus, the selling group would have suffered an economic loss but the loss would be neither recognized nor allowed. Such a result would be contrary to the general rule adopted in the proposed regulations, that stock basis is not presumed noneconomic to the extent there is no disconformity amount or no net positive adjustment amount.

The IRS and Treasury Department recognize that, under the proposed regulations, a very different result follows where it is S1, not S, that earns the $100. In that case, the proposed regulation would treat S's basis in the S1 stock as tentatively reduced by $100 (the lesser of S1's $100 disconformity amount and S1's net positive adjustment). As a result, S would have a disconformity amount of $100 and P's basis in its S share would be reduced by $100 (the lesser of S's $100 disconformity amount and S's $100 net positive adjustment). But the IRS and Treasury Department believe this result is appropriate because S1's disconformity amount evidences that S1 has at least $100 of built-in gain. Further, S1 has a net positive adjustment that evidences the recognition of that built-in gain. Thus, in this case, the facts indicate that S1's income is attributable to the recognition of built-in gain and that, as a result, M's loss on the share of S stock should be treated as noneconomic.

The IRS and Treasury Department recognize that this approach could lead to situations in which the location of an item is manipulated to produce inappropriate results, but believe there are adequate protections against such manipulation. See, for example, section 482 and the various anti-abuse provisions of the consolidated return regulations, including these final regulations.

For all these reasons, the IRS and Treasury Department continue to believe that including lower-tier stock basis in determinations made under the Unified Loss Rule more fully safeguards taxpayers' interests and generally produces more appropriate results.

Several commentators argued that an elective look-through rule would address the concerns inherent in a mandatory look-through rule, as well as the concerns regarding the availability of stock basis information and the complexity of the proposed rules.

The IRS and Treasury Department agree that an elective approach would mitigate the concerns presented by a mandatory look-through rule, but believe that an elective approach would

not provide the desired simplification. The reason is that the decision will affect computations under both the basis reduction rule and the attribute reduction rule, and what may be taxpayer favorable for one rule may be taxpayer unfavorable for the other rule. Thus, the benefit (or burden) of ignoring lower-tier stock basis for the basis reduction rule will need to be weighed against any benefit (or burden) of ignoring lower-tier stock basis for the attribute reduction rule.

The IRS and Treasury Department acknowledge that, in order to simplify compliance, some taxpayers might elect a look-through approach without making detailed alternative computations. However, the IRS and Treasury Department believe that, given the consequences of such an election, the vast majority of taxpayers will compute their tax treatment both with and without a look-through approach before deciding whether to make such an election. Thus, in the vast majority of cases, there would be little or no simplification from an elective look-through approach, and one of the major goals of such a rule would not be achieved.

Moreover, the IRS and Treasury Department believe that taxpayers making both computations will then universally choose the method that produces better results. While taxpayers are free to arrange their affairs so as to legitimately minimize their taxes, a system that will always operate to the disadvantage of one party or the other (in this case, the government) is not properly balanced.

Accordingly, the IRS and Treasury Department believe that a mandatory look-through approach would produce inappropriate results in certain cases, and that an elective look-through approach would fail to achieve a significant amount of simplification and would significantly diminish the balance and fairness of the regulations. The final Unified Loss Rule therefore does not adopt any form of the look-through approach.

Still, the IRS and Treasury Department recognize that determining lower-tier subsidiary stock basis may be difficult for the reasons previously noted. Further, although the need to determine lower-tier subsidiary stock basis is not particular to these regulations, the Unified Loss Rule arguably increases both the frequency and significance of these determinations. Accordingly, the IRS and Treasury Department are considering various proposals that would mitigate these difficulties on a system-wide basis.

One alternative under consideration is a conforming basis election. Under this election, consolidated groups could determine members' bases in shares of subsidiary stock by treating the basis in each share owned by a member as being equal to the share's proportionate interest in the subsidiary's net inside attributes. If such an election were made, the determination would presumably be effective for all Federal income tax purposes. Further, because the determination of subsidiary stock basis is not a concern that is unique to the Unified Loss Rule, consideration is being given to allowing the election with respect to all subsidiaries, with no restrictions on consistency or the time for making elections. However, the IRS and Treasury Department are not certain that such a rule would materially simplify the determination of basis because taxpayers are likely to conclude that they must determine stock basis in judging whether to make the election. Further, the IRS and Treasury Department are concerned about the collateral consequences of such a rule.

Accordingly, the IRS and Treasury Department are requesting comments regarding whether such an election would assist taxpayers and whether it would in fact provide any simplification. Additionally, comments are requested regarding what collateral consequences, if any, such an election should or would have, and whether such consequences are appropriate. The issues include, for example, whether such an election would be an appropriate means of eliminating excess loss accounts, whether it could potentially produce inappropriate cross-chain basis shifts, or whether it could inappropriately facilitate the acceleration of losses.

The IRS and Treasury Department also request comments regarding any other method for addressing this issue.

vi. Items Taken Into Account in Determining the Net Inside Attribute Amount

As a result of various questions and comments received, the IRS and Treasury Department have reconsidered the inclusion of credits in the determination of the net inside attribute amount. Commentators have correctly observed that, at least with respect to credits held at the time of a taxable acquisition of subsidiary stock, credits are economically similar to other valuable attributes and it would be appropriate to take such credits into account in determining the disconformity amount. However, the proper treatment of other credits (that is, credits accruing after the subsidiary stock was acquired) in determining the disconformity amount, and of any credits (whenever accruing) in determining loss duplication, is less clear. Presumably, however, any such methodology would need to be tracing-based, and would therefore be expected to present the significant administrative concerns described in the preamble to the January 2007 proposal. Ultimately, no viable presumptive methodology was identified for determining the proper inclusion of credits, and so no change is made in the final Unified Loss Rule regarding the treatment of credits.

vii. Adjustments for Section 362(e)(2) Transactions

As discussed in Section 3 of this preamble, the IRS and Treasury Department have concluded that section 362(e)(2) should generally not apply to intercompany transactions. However, section 362(e)(2) will apply to transactions occurring prior to September 17, 2008 if the taxpayer does not elect to apply the rule in the final regulations. In such cases, distortions will result and, thus, adjustments will need to be made. The IRS and Treasury Department are also concerned that there are other provisions that could create distortions. Accordingly, the final regulations retain the rule in proposed § 1.1502–36(e)(2) that provided for adjustments to offset the effects of basis reductions required by section 362(e)(2) with respect to intercompany transactions, and the rule that provided for appropriate adjustments in cases raising similar issues. However, under the final regulations, taxpayers may make appropriate adjustments without a determination from the Commissioner.

viii. Effective/Applicability Date Issues

As proposed, the Unified Loss Rule would have been applicable for all transfers on or after the date the regulations were published as final. Several practitioners observed that the proposed effective date caused problems for taxpayers attempting to negotiate transactions because they could not be certain what set of regulations would be in effect when their transactions were completed. Accordingly, commentators and practitioners requested that the regulations include a transition rule that would exclude transfers effected on or after the date the final regulations are published, if such transfers were made pursuant to a binding agreement in place before the publication date.

The IRS and Treasury Department recognized the difficulty created by the proposed effective date and, in Notice 2008–9, 2008–3 IRB 277 (regarding the Internal Revenue Bulletin generally, see

§ 601.601(d)(2)(ii)(*b*)), announced that the final regulations would include a transition rule for transfers between unrelated parties if made pursuant to an agreement that is binding before the date that final regulations are published and at all times thereafter. Further, Notice 2008–9 stated that the IRS and Treasury Department expect that the rule would incorporate the provisions of section 267(b) in determining whether persons are related for this purpose. Accordingly, as stated in Notice 2008–9, the final Unified Loss Rule applies to transfers on or after September 17, 2008, unless the transfer is made pursuant to a binding agreement between unrelated parties that was in effect before September 17, 2008 and at all times thereafter. The final regulations provide that the term related party has the same meaning as in section 267(b).

One comment was also received suggesting that the final regulations include an election to apply their provisions retroactively. The IRS and Treasury Department considered this suggestion but are concerned that adopting such an approach would disrupt taxpayers' otherwise closed transactions and thereby exacerbate the problems caused by the uncertainty and instability in this area over these past years. Accordingly, the final Unified Loss Rule does not include an election to apply its provisions retroactively.

B. Section 1.1502–36(b): Basis Redetermination Rule

Commentators generally recognize and concur with the need for a rule that reallocates investment adjustments to address the problems created when shares of stock are held with disparate bases. As illustrated in Sections B.3, B.4, and E of the preamble to the January 2007 proposal, the allocation of investment adjustments under § 1.1502–32 can create a noneconomic stock loss on an individual share that would be eliminated under § 1.1502–36(c). Similarly, the allocation of investment adjustments under § 1.1502–32 can fail to eliminate a duplicated loss on an individual share. In both cases, however, the allocation creates no net loss if all the shares are taken into account. The basis redetermination rule in § 1.1502–36(b) is designed to address these issues.

Commentators have expressed concern, however, with both the availability of the investment adjustment data required to implement the rule and the complexity of the application of the rule.

The IRS and Treasury Department recognize that the information may be difficult and costly to produce. However, unlike lower-tier subsidiary stock basis information, the information required to implement the basis redetermination rule (specifically, the investment adjustment history of the stock of the subsidiary that is being transferred) is generally information obtained from the group's own tax returns and other records. Groups are therefore, as a general matter, not dependent on other taxpayers for this information.

Furthermore, the IRS and Treasury Department expect that this rule will apply to only a small number of transactions due to the exception for transactions in which members transfer all of their S stock to one or more nonmembers in a fully taxable transaction. Accordingly, it is anticipated that, in most transactions, taxpayers will not be required to redetermine basis. Moreover, in those situations in which it does apply, it accomplishes important objectives for both taxpayers and the government.

Some commentators suggested allowing a member to be treated as having an averaged basis in its shares of S stock if S has only one class of stock outstanding and the member holds all of the S stock. The commentators argue that such an election could significantly reduce the number of taxpayers required to apply the basis redetermination rule. While that might be true, such basis averaging could result in additional complexities and distortions. For example, if a portion of the shares were previously transferred in an intercompany transaction and the bases in all of the subsidiary's shares were averaged, it might be difficult to determine the extent to which particular shares reflect the prior intercompany transaction. Further, averaging the basis in the subsidiary's shares could alter the application of section 267 and section 311.

For all these reasons, the final Unified Loss Rule retains the basis redetermination rule without the suggested modifications.

The final regulations do, however, modify the basis redetermination rule to omit the reallocation of positive investment adjustments applied to preferred shares under § 1.1502–32. The reason is that § 1.1502–32 allocates positive adjustments to preferred shares solely to account for the right to receive distributions. Thus, the positive § 1.1502–32 adjustments allocated to preferred shares, like the adjustments for distributions (which were not reallocated under the proposed Unified Loss Rule), are based on economic changes in the shareholder's investment. As a result, they should have no correlation to unrecognized loss reflected in the bases of the shares and so should not be subject to this rule. The final regulations do, however, continue to permit the reallocation of both positive and negative adjustments from common to preferred shares in order to reduce or eliminate any loss on transferred preferred shares and any gain on either transferred or nontransferred preferred shares. The IRS and Treasury Department believe such reallocations are necessary and appropriate to address any reflection of unrecognized gain or loss in preferred shares attributable, for example, to contributions of assets in exchanged for preferred stock.

i. Exceptions to Basis Redetermination Rule

The proposed basis redetermination rule contained two exceptions to its application, the ''no potential for redetermination'' exception and the ''disposition of entire interest'' exception.

The proposed ''no potential for redetermination'' exception provided that basis redetermination is not required if redetermination would not change any member's basis in S stock. Some commentators found this exception confusing; others suggested that it offered no simplification because it would be necessary to apply the basis redetermination rule to determine whether the exception was available. Other commentators thought that it provided a useful safe harbor. The IRS and Treasury Department have concluded that the rule should be retained, but that it should be revised to state its scope and effect more clearly. Accordingly, under the final regulations, the basis redetermination rule does not apply if members' bases in shares of S common stock are equal (that is, there is no disparity) and members' bases in shares of S preferred stock reflect no gain or loss. The reason is that, under these circumstances, the only effect that a reallocation of investment adjustments could have would be an increase, not a decrease, in basis disparity.

The proposed ''disposition of entire interest'' exception provided that basis redetermination is not required if, within the group's taxable year in which the transfer occurs, all of the shares of S stock held by members are transferred to a nonmember in a one or more fully taxable transactions. This rule differed from the basis reduction netting rule in proposed § 1.1502–36(c)(7) and the net stock loss definition in proposed § 1.1502–36(d)(3)(ii), which only netted among shares transferred in the same

transaction. Commentators observed that this difference presents a potential for distortion and abuse if items are taken into account by S between transfers. While this problem exists to a certain extent if a transaction is comprised of steps that are not executed simultaneously, the problem may be significantly exacerbated by a rule that allowed netting among all transactions within a year. Moreover, because the netting rule in the basis reduction rule is intended, in part, to protect taxpayers when the basis redetermination rule is not applied, the IRS and Treasury Department believe that the application of these rules should be coextensive. Accordingly, the final regulations provide that this exception only applies if members dispose of their entire interest in S stock to one or more nonmembers, if all members' shares of S stock become worthless, or if all members' shares of S stock are either worthless or disposed of to one or more nonmembers, in one fully taxable transaction.

Commentators also inquired whether the ''disposition of entire interest'' exception was mandatory, that is, whether the basis redetermination rule could be applied even if a group disposed of its entire interest in a transaction that qualifies for the exception. The IRS and Treasury Department recognize that taxpayers might choose to apply the basis redetermination rule in such cases in order to reduce gain or avoid the Unified Loss Rule with respect to upper-tier shares. The IRS and Treasury Department do not believe that doing so would be inappropriate, as the premise of the basis redetermination rule is that reallocations made under the rule are appropriate allocations. However, because the IRS and Treasury Department believe that taxpayers will most often not want to apply the basis redetermination rule, the final regulations generally provide that basis is not redetermined when the exception applies, but include an election to apply the basis redetermination rule in such cases.

ii. Manner in Which Investment Adjustments Are Reallocated

Some commentators observed that the proposed rules were vague regarding the manner in which reallocations were to be made. The IRS and Treasury Department generally agree with this observation, but had concluded that the rule would work best if taxpayers were given considerable flexibility in determining how to make specific reallocations. In recognition of the fact that such an approach would allow differing interpretations, section F.2 of the preamble to the January 2007 proposal stated that the IRS would respect any reasonable method or formula employed in applying the basis redetermination rule.

The IRS and Treasury Department continue to believe that the rule should be as flexible as possible. However, in response to these comments, the specific provisions of the final basis redetermination rule provide some additional guidance (discussed more fully in the next section). But the rule is still intended to be flexible in its application and, therefore, the final regulations explicitly provide that the reallocation of an investment adjustment may be made using any reasonable method or formula that is consistent with the basis redetermination rule and furthers the purposes of the Unified Loss Rule. Thus, like the proposed regulations, the final regulations contemplate that more than one result may be reasonable in any specific case.

iii. Decreasing Disparity in Basis of Members' Shares

The general operating rules of the proposed basis redetermination rule provided that reallocations are made in a manner that reduces the extent to which there is disparity in members' bases in S stock. The IRS and Treasury Department have received various questions regarding the scope of this rule. Some practitioners read the rule to completely eliminate the loss on transferred shares even if overall disparity were increased. One practitioner suggested that the general rule, in referring only to the manner of redetermination, did not clearly restrict the amount of redetermination that would otherwise be required under the rules.

To address these concerns, each of the specific allocation provisions in the final regulations includes a statement regarding the manner and extent to which allocations are to be made under the provision. In addition, the operating rules generally provide that the overall application of the rule must reduce disparity among members' bases in preferred shares of subsidiary stock (as provided in the applicable reallocation provisions) and among members' bases in common shares of subsidiary stock, to the greatest extent possible.

C. Section 1.1502–36(c): Basis Reduction Rule

In general, commentators found the general structure of the basis reduction rule and its components (limiting basis reduction to the lesser of the share's disconformity amount and net positive adjustment) to be a reasonable approach to addressing the issue of noneconomic loss. The principal concern expressed was the anticipated difficulty with respect to gathering the information necessary to implement the lower-tier subsidiary rules. Nevertheless, commentators uniformly agreed that basis adjustments from lower-tier subsidiaries must be taken into account in order to identify and address noneconomic stock loss.

The principal suggestion for addressing the lack of readily accessible and reliable information on lower-tier stock basis was to adopt a look-through approach, as discussed in section 1.A.v. of this preamble. For the reasons set forth in that section of this preamble, the final regulations do not adopt this approach. However, as noted, the IRS and Treasury Department continue to request and consider comments on mechanisms for alleviating the difficulty in determining lower-tier subsidiary stock basis.

Commentators and practitioners did suggest a number of other modifications to the basis reduction rule. Those suggestions and the decisions reached are discussed in the following sections.

i. Treatment of Intercompany Debt

Several commentators suggested revising the net positive adjustment amount to exclude items related to intercompany debt. The rationale for this suggestion was that, in general, the nature of such amounts makes them more like to capital transactions than the recognition of built-in gain or loss. Thus it is argued that these amounts should be treated like contributions and distributions, which are not included in the net positive adjustment amount.

The IRS and Treasury Department recognize that, in certain circumstances, intercompany debt has some inherent similarity to capital contributions and distributions, at least with respect to the principal amounts of such obligations. However, the IRS and Treasury Department also recognize that there are circumstances in which unrecognized appreciation in intercompany debt can be reflected in stock basis. For example, if a subsidiary receives cash in exchange for newly issued stock when it holds an intercompany obligation, the basis of the newly issued shares will reflect a portion of any unrecognized appreciation in the obligation. Because the consequences of having that unrecognized appreciation reflected in stock basis are no different from the consequences of any other built-in gain, the regulations would have to provide a system to identify and monitor those

amounts. Such a system would need to rely on a tracing-based methodology, which the IRS and Treasury Department have rejected for the reasons articulated in the preamble to the January 2007 proposal. Accordingly, the IRS and Treasury Department have concluded that no special rules would be adopted for items related to intercompany debt.

ii. Disconformity Amount: Net Inside Attributes

In the proposed regulations, the term net inside attributes was defined as the excess of the sum of S's loss carryovers, deferred deductions, and asset basis over S's liabilities. Although different rules applied to determine basis in lower-tier subsidiary stock, the terms otherwise had the same meaning for purposes of both the basis reduction and attribute reduction rules.

The proposed regulations defined the term loss carryover to mean any net operating or capital loss carryover attributable to S that is or, under the principles of § 1.1502–21 would be, carried to S's first taxable year, if any, following the year of the transfer. Thus, if a buyer were to waive a loss carryover under § 1.1502–32(b)(4), the loss would not be carried to S's first taxable year after the transfer, and so it would be excluded from the computation of net inside attributes.

Practitioners agree that this definition is appropriate for purposes of measuring loss duplication, as it prevents attributes that cannot be duplicated from being taken into account in computing S's attribute reduction amount. However, one commentator observed that this definition seemed inappropriate for purposes of measuring S's disconformity amount.

The IRS and Treasury Department have considered this comment and agree that the definition is inappropriate for computing S's disconformity amount. As discussed in the January 2007 preamble, the disconformity amount was incorporated in the basis reduction rule in order to limit basis reduction to the net amount of a subsidiary's built-in gain. The IRS and Treasury Department believed that, by limiting basis reduction to the amount of net built-in gain, the basis reduction rule would not reduce stock basis by an amount that could not be attributed to the recognition of built-in gain.

However, by adopting a definition of loss carryovers that required such losses to be carried to a separate return year, the rule allowed a waiver of a loss carryover under § 1.1502–32(b)(4) to reduce the amount of a subsidiary's loss carryovers and, as a result, the subsidiary's net inside attributes. That, in turn, caused an increase in the subsidiary's disconformity amount. But, as the commentator observed, any disconformity created by the waiver of a loss carryover would be unrelated to the existence of built-in gain. Thus, this definition of loss carryovers undermined the protection otherwise afforded by the use of the disconformity amount as a limit on basis reduction.

In addition, other commentators found the proposed rule unclear in its reference to losses that would be carried to a separate return year.

To address these concerns, the final regulations provide that the term loss carryovers means those losses that are attributable to the subsidiary, including any losses that would be apportioned to the subsidiary under the principles of § 1.1502–21(b)(2) if the subsidiary had a separate return year. However, because a waiver under § 1.1502–32(b)(4) does affect the extent to which a loss can be duplicated, the final regulations provide that, solely for purposes of applying the attribute reduction rule, a subsidiary's loss carryovers (and therefore its net inside attributes) do not include the amount of any losses waived under § 1.1502–32(b)(4).

D. Section 1.1502–36(d): The Attribute Reduction Rule

As discussed in the preamble to the January 2007 proposal, the loss duplication component of the Unified Loss Rule addresses loss duplication systemically in order to clearly reflect the income of both the group and its members, including former members. The IRS and Treasury Department view this rule as a necessary and appropriate complement to § 1.1502–32 because, together they work to eliminate the duplication of a group item once the group enjoys the benefit of the item, without regard to which of the duplicative items is recognized and allowed first. The IRS and Treasury Department also view this rule as a necessary and appropriate complement to the basis reduction rule because it eliminates S's unrecognized built-in loss to the extent it prevented the identification of S's recognized built-in gain (and thus prevented the reduction of noneconomic stock basis, and noneconomic stock loss). See sections C.3 and C.4.v of the preamble to the January 2007 proposal for a discussion of the interaction between unrecognized built-in loss and recognized built-in gain.

Commentators generally agreed with the IRS and Treasury Department on the need for, and appropriateness of, the systemic approach to loss duplication. However, like the basis redetermination and basis reduction rules, the attribute reduction rule received considerable commentary regarding the issues of data availability and computational complexity. Commentators and practitioners made several suggestions for technical revisions to the proposed regulations. The IRS and Treasury Department have considered the suggestions received as well as other revisions to the proposed attribute reduction rule. The suggestions and conclusions are discussed in the following sections.

i. Lower-Tier Subsidiary Rules

In general, commentators and practitioners recognize that the rules for measuring and eliminating loss duplication must take into account both the basis in lower-tier subsidiary stock and the attributes of lower-tier subsidiaries in order to be most effective. Nevertheless, as already noted, commentators expressed much concern regarding the administrability of the proposed lower-tier subsidiary rules. Their principal suggestion for addressing this concern was the adoption of a look-through approach that would address loss duplication only by taking lower-tier attributes into account.

The IRS and Treasury Department considered a look-through approach when drafting the January 2007 proposal, but were concerned that such an approach would not adequately address loss duplication. The principal reason for this concern was that loss duplication can reside in the basis of lower-tier subsidiary stock and in the attributes of that lower-tier subsidiary and, moreover, that it can reside in those locations in differing amounts. Therefore, a rule that measures loss duplication solely by reference to lower-tier attributes, or solely by reference to lower-tier stock basis, would permit potentially significant amounts of loss duplication to avoid reduction. To avoid this problem, the IRS and Treasury Department concluded that the loss duplication regulations must measure loss duplication by reference to both.

The IRS and Treasury Department recognized, however, that when duplication is not uniformly reflected in stock basis and attributes, this approach could cause an over-reduction in lower-tier attributes (when loss duplication resides primarily in lower-tier stock basis) or in lower-tier stock basis (when loss duplication resides primarily in lower-tier attributes). To prevent the former result, the conforming limitation on lower-tier attribute reduction limits the application of tiered-down attribute reduction (generally permitting a lower-

tier subsidiary's attributes to be reduced only to the extent necessary to conform them to members' bases in that subsidiary's stock, as reduced under this rule). To prevent the latter result, the basis restoration rule reverses reductions to lower-tier stock basis made by the Unified Loss Rule (generally to the extent necessary to conform members' bases in the subsidiary's stock to the subsidiary's net inside attributes, as reduced under this rule).

Thus, these rules work together to protect the government's interests (by addressing the entire potential for loss duplication) and taxpayers' interests (by preventing the over-reduction of either lower-tier stock basis or lower-tier attributes). Accordingly, the IRS and Treasury Department continue to believe these rules are essential to the balance and fundamental fairness of the Unified Loss Rule.

Nevertheless, the IRS and Treasury Department recognize that the conforming limitation and basis restoration rules can add considerable complexity to the application of the Unified Loss Rule. To address this concern, commentators have suggested that one or the other of these rules could be omitted to simplify the proposed rule. The IRS and Treasury Department are concerned, however, that eliminating either of these rules would considerably undermine the overall fairness of the regulation. But the IRS and Treasury Department are persuaded that, if a taxpayer determines that the expected benefit of applying these rules is outweighed by the additional complexity, then that taxpayer should be permitted to choose not to apply these rules.

Accordingly, these final regulations continue to measure the potential for loss duplication by taking both stock basis and attributes into account and continue to safeguard against over-reduction of either inside attributes or stock basis by applying both the conforming limitation and the basis restoration rules. However, under the final regulations, taxpayers are permitted to elect not to apply the conforming limitation or the basis restoration rule if they decide the protection afforded by either or both of those rules does not outweigh the burden of applying them.

ii. Attribute Reduction Amount Below Five Percent of Value

Although the fundamental structure of the attribute reduction rule has been retained, the IRS and Treasury Department have determined that it is appropriate to provide an exception to the application of the attribute reduction rule if the attribute reduction amount (that is, the duplicated loss) is small relative to the size of the transaction. This decision reflects a balancing of the need to eliminate duplicated loss and the administrative burden of applying the attribute reduction rule. Accordingly, under these final regulations, taxpayers must still compute their attribute reduction amount, but if the total attribute reduction amount is less than five percent of the aggregate value of the subsidiary shares that are transferred by members in the transaction, the attribute reduction rule does not apply to the transfer.

However, the IRS and Treasury Department also recognize that, in certain circumstances, a taxpayer may prefer to have the attribute reduction rule apply. For example, a group may want to apply the rule in order to reattribute a subsidiary's attributes. Accordingly, the final regulations allow taxpayers to elect to apply the attribute reduction rule notwithstanding that their total attribute reduction amount is less than five percent of the aggregate value of the transferred shares. If this election is made, the attribute reduction rule will apply with respect to the entire attribute reduction amount determined in the transaction, and thus applies with respect to all members transferring shares, and all shares transferred, in the transaction.

iii. Ordering of Reduction of Recognized Losses

Commentators generally agreed with the decision to reduce recognized losses (net operating loss (NOL) carryovers, capital loss carryovers, and deferred deductions, identified as Category A, Category B, and Category C attributes, respectively) before reducing asset basis, since the former items represent actual, identified losses. The proposed regulations provided that the attribute reduction amount would be first applied to reduce NOL carryovers (from oldest to newest), then capital loss carryovers (from oldest to newest), and then deferred deductions (proportionately). However, several commentators questioned the need for a mandatory order in which these attributes would be reduced. These commentators observed that, because loss duplication is a mathematical determination under the Unified Loss Rule, and because it is difficult (if not impossible) to know which attributes are economically duplicative of a stock loss, the reduction of any item in those categories should be equally appropriate and effective.

The IRS and Treasury Department have reconsidered this issue and agree with the commentators. Accordingly, the final regulations provide that if the attribute reduction amount is less than the total attributes in Category A, Category B, and Category C, the taxpayer may specify the allocation of S's attribute reduction amount among the attributes in those categories.

The final regulations do, however, prescribe a default allocation for the reduction of such attributes that is used to the extent the taxpayer does not specify an allocation. This default allocation differs from the order provided in the proposed rule in that capital loss carryovers (not NOLs) are reduced first. This modification was made in response to a commentator's suggestion, based on the observation that capital loss carryovers have a significantly shorter expiration period and are therefore more likely than NOLs to expire unused. Accordingly, except to the extent a taxpayer elects to specify an allocation, the final regulations first reduce capital loss carryovers (oldest to newest), then NOL carryovers (oldest to newest), and then deferred deductions (proportionately). This change in the order of reduction is intended to minimize the possibility that the attribute reduction rule will reduce attributes in an amount greater than the amount that would ultimately be available for duplicative use.

The final regulations continue to provide that, regardless of the order in which attributes in these categories are reduced, they are reduced in full before any reduction is made to asset basis.

iv. Methodology for Reduction of Asset Basis

Several commentators have suggested simplifying modifications to the manner in which asset basis is reduced under the attribute reduction rule. One is the elimination of the proposed Category D attributes (unrecognized losses on publicly traded property). This category was included in the proposed rule because the IRS and Treasury Department recognized that these amounts represent a readily identifiable loss that could be eliminated before the presumptive reduction of the bases of other assets. This approach prevented the attribute reduction rule from creating or increasing gain in publicly traded assets. However, commentators viewed this rule as increasing the complexity of an already complex analysis while providing only a marginal benefit.

The IRS and Treasury Department are persuaded that this extra complexity might not be warranted in this context

and that the elimination of this rule would not materially affect the balance otherwise reached by the Unified Loss Rule. Accordingly, the final regulations include publicly traded property in the general asset basis category (now designated Category D).

Another suggestion made by commentators was to apply the attribute reduction amount remaining after reducing Category A, Category B, and Category C attributes to reduce asset basis in the reverse order of the residual method of allocating consideration paid or received in a transaction under section 1060.

The IRS and Treasury Department have concluded that this approach is readily administrable and reflects an appropriate balancing of presumptions regarding the location of duplicated loss. An important consideration is that such a rule reduces basis in purchased goodwill and going concern value before basis in other assets, and the IRS and Treasury Department are persuaded that duplicated loss is generally more likely to be reflected in the bases of such assets. Therefore, the elimination of the basis in those assets first seems particularly appropriate. Further, the IRS and Treasury Department believe that this approach would generally be more administrable than the proposed pro rata reduction of asset basis.

Accordingly, these final regulations adopt this suggestion and generally provide that the attribute reduction amount is applied to reduce the basis of assets in the asset classes specified in § 1.338–6(b) other than Class I (cash and general deposit accounts, other than certificates of deposit held in depository institutions), but in the reverse order from the order specified in that section. Thus, under this reverse residual method, any attribute reduction amount applied to reduce asset basis is generally applied first to reduce any basis of assets in Class VII (proportionately, based on basis instead of value, until all such basis is eliminated). Any remaining attribute reduction amount is then applied in the same manner to reduce the basis of assets in each succeeding lower asset class, other than Class I.

Notwithstanding the general adoption of this allocation methodology for Category D attributes, these final regulations provide that the portion of the attribute reduction amount that is not applied to attributes in Category A, Category B, and Category C, is first allocated between S's basis in any stock of lower-tier subsidiaries (treating all S's shares of any one lower-tier subsidiary as a deemed single share) and the subsidiary's other assets (treating the non-stock Category D assets as one asset). The allocation is made in proportion to S's deemed basis in each single share of lower-tier subsidiary stock and S's basis in the non-stock Category D asset (S's aggregate basis in all of its Category D assets other than subsidiary stock). Only the portion of the attribute reduction amount not allocated to lower-tier subsidiary stock is applied under the reverse residual method. This initial allocation between lower-tier subsidiary stock and other assets is necessary to ensure that, to the extent the attribute reduction amount reflects items attributable to a lower-tier subsidiary's stock basis or attributes, the attribute reduction amount is properly directed and applied to those items.

v. Suspension of Excess Attribute Reduction Amount

Several commentators and practitioners questioned the need to suspend attribute reduction amounts in excess of reducible attributes and apply those suspended amounts to reduce or eliminate attributes otherwise arising when all or part of the liability is paid or otherwise satisfied, whether by S or another person. The IRS and Treasury Department proposed this rule because the mathematical operation of the formula for computing the attribute reduction amount results in such an excess only if there is a liability or similar item that has reduced economic value but that has not been taken into account for tax purposes (generally a contingent liability).

The IRS and Treasury Department continue to believe that it is inappropriate to permit the duplication of economic losses that have not accrued for tax purposes and, therefore, that this rule is both necessary and appropriate. Accordingly, the rule is retained in the final regulations.

The IRS and Treasury Department recognize that this rule could create an administrative burden that could last for many years and transfer to taxpayers beyond the initial buyer and seller. However, the IRS and Treasury Department believe that the elimination of the special rule for publicly traded property substantially lessens the administrative burden of this rule. The reason is that, under this revised approach in the final regulations, a subsidiary's attribute reduction amount can only exceed reducible assets to the extent of the subsidiary's Class I assets. In such cases, the IRS and Treasury Department do not believe the burden imposed to be unreasonable or, in most cases, substantial. Moreover, a taxpayer believing the rule to be overly burdensome in its situation can readily avoid any suspension of its attribute reduction amount by converting its Class I assets into assets of another class; in that case, the remaining attribute reduction amount will be applied to the bases of those assets and will not give rise to a suspended attribute reduction amount.

The IRS and Treasury Department received a comment that, if the suspended attribute reduction rule is retained, it should be clarified to provide that present value principles are to be taken into account in valuing liabilities. The final regulations do not include an explicit statement on this point because the rule implicitly incorporates present value principles (by limiting the attribute reduction amount to the lesser of the net stock loss and the aggregate inside loss, which are both a function of value).

vi. Election to Reduce Stock Basis and/or Reattribute Attributes

Several commentators suggested that the final regulations should expressly permit taxpayers to make a protective election to reattribute attributes (other than asset basis) and/or to reduce stock basis (and thereby reduce stock loss) in order to avoid attribute reduction. The IRS and Treasury Department intend these elections to be as flexible as possible. Accordingly, the final regulations explicitly provide that, if the election is made and it is ultimately determined that S has no attribute reduction amount, the election will have no effect, or if the election is made for an amount that exceeds S's finally determined attribute reduction amount, the election will have no effect to the extent of that excess.

In addition, the final regulations permit taxpayers to reduce (or not reduce) stock basis, or to reattribute (or not reattribute) attributes, or some combination thereof, in any amount that does not exceed S's attribute reduction amount.

Thus, under the final regulations, taxpayers have considerable flexibility in making this election, and may make a protective election.

Further, in order to protect against inadvertent attribute reduction, these final regulations provide for a deemed stock basis reduction election equal to the net stock loss (taking into account any actual elections under § 1.1502–36(d)(6)) in the case of a transfer in which the stock loss in the transferred shares would otherwise be permanently disallowed (for example under section 311(a)).

Several commentators also questioned the need for a mandatory order for the reattribution of losses for the same

reasons they questioned the need for a mandatory order for the reduction of such attributes. For the reasons discussed in section 1.D.iii. of this preamble, the IRS and Treasury Department agree that a mandatory order of reattribution is not necessary. Thus, under the final regulations, attributes are reattributed in the same amount, order, and category that they would otherwise be reduced under the attribute reduction rule. Accordingly, because the final regulations provide that taxpayers can specify the attributes in Category A, Category B, and Category C to be reduced, taxpayers may similarly specify the attributes in Category A, Category B, and Category C to be reattributed. Similar to the rule regarding the allocation of the attribute reduction amount, to the extent the taxpayer elects to reattribute attributes but does not specify the attributes to be reattributed, any attributes not specifically reattributed will be reattributed in the default amount, order, and category applicable for attribute reduction.

Additionally, the final regulations revise the provisions regarding the election to reattribute attributes to provide for the reattribution of a section 382 limitation. The final regulations also include conforming amendments to the consolidated section 382 rules in §§ 1.1502–90, 1.1502–91(h)(2), 1.1502–95(d), 1.1502–96(d), and 1.1502–99(b)(4).

vii. The Conforming Limitation

As previously discussed, the proposed regulations limited the application of the attribute reduction amount that tiered down to a lower-tier subsidiary in order to prevent an excessive reduction to that subsidiary's attributes. Under this limitation (the conforming limitation), the tier-down attribute reduction amount (when combined with any attribute reduction amount computed with respect to a transfer of the shares of the lower-tier subsidiary) could be applied to reduce a lower-tier subsidiary's attributes only to the extent necessary to conform those attributes to an amount equal to the sum of all members' bases in nontransferred shares, and the value of all members' transferred shares, of that subsidiary's stock.

Commentators observed that the conforming limitation could allow duplication to survive the application of the attribute reduction rule when lower-tier stock basis reflects noneconomic basis. The commentators illustrated their observation with the following example:

*Example.* M forms S with $100 of cash. S has no other assets or operations. S acquired S1 stock for $100 and no section 338 election is made with respect to such acquisition. S1 has one asset (A1) with a basis of $20 and a value of $100. S1 sells A1 for $100. M's basis in its S stock, and S's basis in its S1 stock, both increase by $80 to $180. S1 invests the $100 of proceeds in another asset (A2). A2 subsequently, declines in value to $40. M sells the S stock for $40.

Under the proposed basis reduction rule, M's basis in the S stock is reduced by the lesser of S's $80 net positive adjustment and S's $80 disconformity amount (determined by treating S's $180 basis in the S1 stock as tentatively reduced by $80, the lesser of S1's $80 net positive adjustment and S1's $80 disconformity amount). After the application of the proposed basis reduction rule, M would recognize a $60 loss on the sale of the S stock.

Under the proposed attribute reduction rule, S's attribute reduction amount is $60 (the lesser of the $60 net stock loss, and S's $140 aggregate inside loss), and S would reduce its basis in the S1 stock by $60 to $120. Under the proposed attribute reduction rule, S's $60 attribute reduction amount allocated to the S1 stock becomes an attribute reduction amount of S1. However, under the proposed conforming limitation on tier-down attribute reduction, S1 is not required to reduce its $100 basis in A2 because S1's $100 of attributes do not exceed S's post-reduction $120 basis in the S1 stock. As a result, M's $60 loss continues to be duplicated in both S's basis in the S1 stock and S1's basis in A2.

The IRS and Treasury Department agree that, under these facts, the attribute reduction rule does not eliminate all lower-tier duplication. However, this effect follows directly from policy decisions underlying the Unified Loss Rule, specifically, that it would be a loss limitation rule and that the basis reduction rule would apply only upon a disposition, deconsolidation, or worthlessness of a loss share. Under this approach, as long as a share is held by the same person and is subject to the consolidated return provisions, noneconomic lower-tier subsidiary stock basis is preserved. As a result, subsequent appreciation can permit the stock to be transferred without being subject to the Unified Loss Rule, and the noneconomic stock basis can reduce any gain that would otherwise be recognized. It is the preservation of that noneconomic stock basis that prevents the full elimination of duplicated loss in S1's attributes.

The issue could be addressed in several ways. First, the decision to preserve basis until there is a loss transfer could be reversed. However, the rule would then either reduce lower-tier stock basis below value or rely on valuation to limit such basis reduction. The IRS and Treasury Department are concerned that adding a valuation component to this rule would present substantial administrative concerns. More importantly, however, the IRS and Treasury Department do not believe that such an approach adequately protects the balance struck in the regulation as proposed and so are not reconsidering that decision.

Alternatively, the conforming limitation could be revised such that any conforming limit would be reduced by the amount of any tentative reduction to stock basis under the basis reduction rule. In the example set forth by the commentators, this would reduce S1's conforming limitation by $80 (S1's tentative reduction amount), from $120 to $40. As a result, S1's basis in A2 would be reduced to $40. While this would produce an appropriate result with respect to A2, it leaves S's basis in the S1 stock reflecting $80 of disconformity. Accordingly, absent additional adjustments, S's basis in the S1 stock could appear to reflect a noneconomic loss, and so the rule would remain imperfect.

Moreover, the effect of such an approach would be to create a disconformity amount that is not related to built-in gain. Consequently, when the S1 stock is ultimately sold, economic loss could appear noneconomic and, therefore, could be eliminated under the basis reduction rule. Although the Unified Loss Rule affords some protection for this situation in the operating rules (see the discussion in section A.1.vii. of this preamble), the IRS and Treasury Department are concerned that the tracing necessary to make the adjustments to prevent the elimination of economic loss will present substantial administrative difficulty and, in many cases, may not be possible.

Furthermore, in certain circumstances, the proposed conforming limitation on tier-down attribute reduction could prevent an unnecessary reduction in lower-tier inside attributes, for example, when the loss on S stock is attributable to the loss of built-in gain on an asset held by S (other than subsidiary stock).

Based on all of these considerations, the IRS and Treasury Department have decided not to revise this rule in the final regulations, but will continue to consider the issue.

viii. Attribute Reduction in the Case of Certain Dispositions Due to Worthlessness and Where the Subsidiary Ceases to be a Member and Does Not Become a Nonmember

Section 1.1502–35(f) generally provides that, if a member treats stock of S as worthless under section 165

(taking into account § 1.1502–80(c)) and S continues as a member, or if M recognizes a loss on S stock and on the following day S is not a member and does not have a separate return year following the recognition of the loss, all losses treated as attributable to S under the principles of § 1.1502–21(b)(2)(iv) are treated as expired as of the beginning of the day following the last day of the group's taxable year. This rule was intended to prevent any implication that S's share of the consolidated losses could be treated as remaining part of the consolidated net operating or capital loss carryover after S becomes worthless or is dissolved in a taxable transaction. The IRS and Treasury Department continue to believe that the regulations should explicitly clarify that such losses are removed from the consolidated losses.

Commentators have observed that, in the specified circumstances, any credits and built-in losses attributable to S should also be eliminated to prevent their use after S either becomes worthless or is dissolved in a taxable transaction. The IRS and Treasury Department agree that, in such cases, S's credits and other attributes should no longer be available to the group.

Accordingly, these final regulations provide a special attribute elimination rule that applies to transfers that result from one of two events. The first is M's transfer of a share of S stock caused solely by M treating the share as worthless under section 165 (taking into account the provisions of § 1.1502–80(c)), if S remains a member of the group and M has a deduction or recognizes a loss with respect to the transfer of the share. The second is M's transfer of a share of S stock caused by S ceasing to be a member, if S has no separate return year and M recognizes a net deduction or loss on its S shares transferred in the transaction. When there is a transfer of S stock in either of these situations, S's net operating loss carryovers, capital loss carryovers, and deferred deductions (including S's share of such consolidated tax attributes) that are not otherwise reduced or reattributed under § 1.1502–36(d), and S's credits (including S's share of consolidated credits), are eliminated. The IRS and Treasury Department do not believe that any special rule is required regarding any built-in loss in assets because excess asset basis should not survive the transactions to which this rule applies.

In considering this rule, the IRS and Treasury Department recognized that the reason for eliminating S's attributes, including credits and deferred deductions, arises from the nature of the specified transactions, not from the amount of the member's basis in the stock transferred in the transaction. Further, as provided in § 1.1502–19(a)(2)(ii), an excess loss account is treated as basis that is a negative amount and a reference to P's basis in S's stock includes a reference to P's excess loss account. Accordingly, the IRS and Treasury Department have concluded that the elimination of S's attributes should occur whenever one of the specified transactions occurs, without regard to the amount of the basis of the transferred share. Under such an approach, the treatment of S's attributes following one of the specified transfers would be consistent irrespective of whether the aggregate basis in the members' shares is a positive number (which produces a net loss or deduction), a negative number (an excess loss account, which produces income or gain under § 1.1502–19), or zero (which produces no income, gain, deduction or loss).

Accordingly, these final regulations include a provision in § 1.1502–19 that applies to the same two transactions that will result in the complete elimination of S's attributes when members have net loss on S stock. Thus, it will apply when a share of S stock is worthless under section 165, the requirements of § 1.1502–19(c)(1)(iii) are satisfied, members do not have a net deduction or loss on the S stock, and S continues as a member. It will also apply when S ceases to be a member, S has no separate return year, and members recognize an amount that is not a net loss on the subsidiary's stock in the transaction. When it applies, it will eliminate S's net operating loss carryovers, capital loss carryovers, and deferred deductions (including S's share of such consolidated tax attributes), and S's credits (including S's share of consolidated credits).

Under both the § 1.1502–36 and the § 1.1502–19 elimination rules, attributes other than consolidated tax attributes (determined as of the event) are eliminated immediately before the event resulting in the application of the rule. Because consolidated tax attributes are first carried to the consolidated return year before being apportioned to a member's first separate return year, the IRS and Treasury Department do not believe that any special timing rule is required regarding the elimination of the portion of any consolidated tax attributes attributable to the member under either of these rules. Mechanically, the elimination of the member's portion of any consolidated tax attributes under either rule can only occur immediately after the close of the group's tax year that includes the event.

To clarify that there is no duplicative adjustment, these final regulations provide that the elimination of these attributes under either rule is not a noncapital, nondeductible expense.

*2. Other Sections Addressing Subsidiary Stock Loss: §§ 1.337(d)–1, 1.337(d)–2, 1.1502–20, and 1.1502–35*

In general, transfers of loss shares of subsidiary stock on or after September 17, 2008 will be subject to the Unified Loss Rule and not § 1.337(d)–1, § 1.337(d)–2, § 1.1502–20, or § 1.1502–35. The IRS and Treasury Department do not expect that § 1.1502–20 will affect any transactions occurring on or after September 17, 2008. However, because of the binding-commitment transition rule, the IRS and Treasury Department expect there will be some transactions occurring on or after September 17, 2008 that will be subject to §§ 1.337(d)–1, 1.337(d)–2, and 1.1502–35. In addition, dispositions subject to § 1.1502–35 will continue to be subject to the loss suspension and anti-loss reimportation rules in § 1.1502–35. Accordingly, the IRS and Treasury Department are removing § 1.1502–20 and retaining §§ 1.337(d)–1, 1.337(d)–2, and 1.1502–35, subject to certain modifications described below.

Under these final regulations, §§ 1.337(d)–1 and 1.337(d)–2 are modified to state explicitly that they do not apply to transactions subject to the Unified Loss Rule. However, those sections remain otherwise applicable.

Section 1.1502–35 is also modified to state explicitly that it does not apply to transfers subject to the Unified Loss Rule. Although the provisions of § 1.1502–35 are largely unchanged in these final regulations, there are some significant modifications, and those modifications are described in the following paragraphs.

A. Ten-Year Termination of Application of § 1.1502–35

Under the final regulations, the loss suspension rule is revised to provide that it ceases to apply ten years after the stock disposition that gave rise to the suspended loss. The purpose of this modification is to conform the loss suspension rule and the anti-loss reimportation rule.

In addition, the general provisions of § 1.1502–35 are revised to apply only to losses allowed within ten years of the date that they are recognized. Thus, if a loss is deferred and taken into account more than ten years after the disposition, or if an exchanged basis asset is sold at a loss more than ten

years after the exchanged basis asset is acquired, the section will have no application to the loss. The purpose of this modification is to conform all application of § 1.1502–35 to the ten-year rule applicable to loss suspension and anti-loss reimportation.

B. Location of Suspended Loss

These final regulations modify § 1.1502–35 to state explicitly that if M recognized a loss on S stock and the loss was suspended under § 1.1502–35(c), and if M ceases to be a member when S remains a member, then, immediately before M ceases to be a member, P is treated as succeeding to the loss in a transaction to which section 381(a) applies. Thus, the suspended loss is explicitly preserved for use by the group that disposed of the loss stock, and the location of the loss is specified. However, § 1.1502–35(c)(5)(i) provides that, ''[t]o the extent not reduced * * *, any loss suspended * * * shall be allowed * * * on a return filed by the group of which the subsidiary was a member on the date of the disposition of subsidiary stock that gave rise to the suspended loss * * * for the taxable year that includes the day before the first date on which the subsidiary * * * is not a member of such group or the date the group is allowed a worthless stock loss * * *.'' Further, § 1.1502–35(c)(3) provides that ''any loss suspended * * * is treated as a noncapital, nondeductible expense of the member that disposes of subsidiary stock, incurred during the taxable year that includes the date of the disposition of stock [that gave rise to the suspended loss].'' Accordingly, the IRS and Treasury Department believe these final regulations merely clarify the rule in § 1.1502–35.

C. Effect of Elimination of Reimported Item

Under the anti-loss reimportation rule, a reimported item is generally eliminated immediately before it would be taken into account by the group. The regulations provided that the elimination of the item was a noncapital, nondeductible expense under §§ 1.1502–32(b)(2)(iii) and 1.1502–32(b)(3)(iii). A practitioner suggested that this result would inappropriately reduce upper-tier stock basis and, as a result, would either create noneconomic gain or eliminate economic loss. The IRS and Treasury Department considered modifying this provision but have concluded that the elimination of a reimported item is similar to the expiration of a separate return limitation year loss and should be similarly treated. Accordingly, this rule is not modified in the final regulations.

*3. The Application of Section 362(e)(2) to Intercompany Transfers*

The proposed regulations included rules for suspending the application of section 362(e)(2) in the case of transactions between members of a consolidated group. The IRS and Treasury Department had proposed the rule because the interaction of section 362(e)(2) and the consolidated return provisions (which already address duplication issues) causes significant distortions, administrative burden, and the potential for inappropriate loss disallowance and gain creation. In general, the proposed rules were intended to postpone the application of section 362(e)(2) to an intercompany transaction until the consolidated return provisions could no longer address the loss duplication created in the intercompany transaction.

To implement such a regime, however, complex tracing rules would be necessary to identify the extent to which duplication is eliminated and to continuously monitor the extent to which duplication could continue to be eliminated by the consolidated return provisions. Although the intent was to simplify the application of section 362(e)(2) in the consolidated return setting and to prevent the adjustments otherwise made under section 362(e)(2) from causing inappropriate results under the consolidated return provisions, commentators found these rules to be extremely complex and expect them to be extremely burdensome to administer. The IRS and Treasury Department concur with these views.

Commentators offered two suggestions for addressing the concerns raised by the application of section 362(e)(2) to intercompany transactions.

The first suggestion was to treat intercompany section 362(e)(2) transactions as taxable transactions to the extent of the net loss in the transferred assets. Thus, the losses would not be duplicated and, because the transfers would be intercompany transactions, § 1.1502–13 would police the recognition of the losses. The rationale supporting this approach was that using a familiar regime (specifically, the intercompany transaction provisions of § 1.1502–13) would lessen the overall complexity of the provisions as well as the administrative burden placed on taxpayers and the government. Although this approach would be less burdensome than the approach in the proposed regulations, the IRS and Treasury Department are concerned that this approach would still impose an unnecessary administrative burden. Further, unlike either the general application of § 1.1502–13 to a nonrecognition transaction or the general application of section 362(e)(2), this approach would effectively preserve the original location of the net loss in the transferred assets.

The second suggestion was to modify the consolidated return provisions to make section 362(e)(2) generally inapplicable to intercompany transactions. Commentators stated that applying section 362(e)(2) to intercompany transactions gives rise to administrative burden and complexity even if the taxable intercompany transaction model were adopted. Further, they argued that applying section 362(e)(2) to intercompany transactions is unnecessary because the consolidated return regulations (including the Unified Loss Rule) are already structured to address duplication of loss (and gain) within the group (including its members and former members) in a manner and scope that has been determined appropriate in the consolidated return setting, given the competing single and separate entity policy issues. The application of section 362(e)(2) to intercompany transactions is thus not only generally unnecessary and burdensome, it is disruptive of the balance struck in the various consolidated return provisions, most notably the investment adjustment rules in § 1.1502–32 and the Unified Loss Rule in § 1.1502–36.

For these reasons, the IRS and Treasury Department have concluded that section 362(e)(2) should generally not apply to intercompany transactions. Accordingly, these final regulations add a new paragraph (h) in § 1.1502–80, which makes section 362(e)(2) generally inapplicable to intercompany transactions. The purpose of the provision is to allow the consolidated return provisions to address loss duplication. The IRS and Treasury Department are therefore withdrawing proposed § 1.1502–13(e)(4), which proposed the suspension of the application of section 362(e)(2) to intercompany transactions.

Notwithstanding the decision to make section 362(e)(2) generally inapplicable to intercompany transactions, the IRS and Treasury Department are concerned that the inapplicability of section 362(e)(2) could be used to reach inappropriate results. For example, assume M transfers a loss asset to S in exchange for new shares in a transaction to which section 351(a) applies, S has an asset with offsetting appreciation,

and later M sells only the new shares received in exchange for the loss asset. If S has no aggregate inside loss, the Unified Loss Rule will not require any attribute reduction. Accordingly, if S remains a member, the group could obtain more than a single benefit for its economic loss. The final regulations therefore include an anti-abuse rule that provides for appropriate adjustments to be made to clearly reflect the income of the group if a taxpayer acts with a view to prevent the consolidated return provisions from properly addressing loss duplication. The final regulations also include an example that illustrates both an abusive fact pattern (similar to the one described) and a nonabusive fact pattern (similar to the one described, except that all the stock is sold).

*4. Proposed Revisions to the Investment Adjustment Provisions, § 1.1502–32*

In the January 2007 proposal, the IRS and Treasury Department proposed several modifications to the investment adjustment rules in § 1.1502–32. The principal modifications that were proposed related to the treatment of items attributable to property transferred in an intercompany section 362(e)(2) transaction and to the treatment of items attributable to the application of § 1.1502–36(d).

As discussed in section 3 of this preamble, these final regulations make section 362(e)(2) generally inapplicable to intercompany transactions. Accordingly, the IRS and Treasury Department are withdrawing proposed § 1.1502–32(c)(1)(ii)(A) (regarding the allocation of items otherwise attributable to intercompany section 362(e)(2) transactions).

Proposed regulations addressing the treatment of items attributable to the application of § 1.1502–36(d) are finalized as § 1.1502–32(c)(1)(ii). The IRS and Treasury Department have clarified the language of the proposed rule, but have made no substantive change to that rule.

In addition, the proposed regulations made various nonsubstantive modifications to the language of § 1.1502–32 that were intended to simplify, clarify, and then conform various sections of the regulations. Those proposed changes are adopted without substantive change.

*5. Miscellaneous Amendments to Other Regulations*

In addition to the various provisions directly related to the treatment of losses on subsidiary stock and to the treatment of intercompany section 362(e)(2) transactions, the January 2007 proposal included a number of proposed modifications to regulations unrelated to subsidiary stock loss issues. The proposed revisions are described in Section I of the preamble to the January 2007 proposal. These final regulations adopt those proposed regulations without substantive change.

These final regulations also include several additional provisions that are either additional technical corrections to existing regulations or expansions of regulatory modifications proposed in the January 2007 proposal and adopted as final in this Treasury decision.

A. Technical Amendment to § 1.1502–13(g)(3)(i)(B)(2)

One commentator suggested an expansion of § 1.1502–13(g)(3)(i)(B)(*2*), which prevents the application of § 1.1502–13(c)(6)(i) to items of income or gain attributable to the reduction in basis of an intercompany obligation by reason of sections 108 and 1017 and § 1.1502–28 (and thereby prevents such items from being excluded from income). The commentator noted that the same rule should be applied to items of income or gain attributable to the reduction in basis of an intercompany obligation by reason of § 1.1502–36(d), in order to prevent the circumvention of the effects of attribute reduction. The IRS and Treasury Department agree that such a revision would be a helpful clarification and that change is incorporated in these final regulations.

B. Amendments to § 1.1502–33(e) ''Whole-Group'' Exception

In the January 2007 proposal, modifications were proposed to the ''whole-group'' exceptions in § 1.1502–13(j)(5) (excepting whole-group acquisitions from the general rule that deconsolidations require intercompany items to be taken into account) and § 1.1502–19(c)(3) (excepting whole-group acquisitions from the general rule that deconsolidations require excess loss accounts to be taken into account).

In response to the proposed changes to the whole-group exceptions in §§ 1.1502–13 and 1.1502–19, commentators suggested that a similar revision would be appropriate for the whole-group exception in § 1.1502–33(e)(2). That rule excepts whole-group acquisitions from the general rule in § 1.1502–33(e)(1) that eliminates a member's earnings and profits upon deconsolidation. The IRS and Treasury Department agree that the same reasoning supports the modification of all three whole-group exceptions.

Accordingly, these final regulations modify the whole-group exception in all three provisions, §§ 1.1502–13(j)(5), 1.1502–19(c)(3), and 1.1502–33(e)(2), to allow for their application without regard to whether the acquirer is a member of a consolidated group prior to the acquisition. Further, these final regulations provide that taxpayers may elect to apply each of these modified whole-group exceptions retroactively.

C. Anti-Duplicative Adjustments Provisions

The January 2007 proposal included a set of modifications that was intended to simplify several existing provisions by removing all references to the continued applicability of the Code and all of the anti-duplicative adjustment rules, and including such rule in a single paragraph in § 1.1502–80. The IRS and Treasury Department believed this change would simplify the regulations, as well as remove any potential for inadvertent omission or negative implication in other provisions where such concepts are or should be applicable.

Commentators questioned whether the removal of the discussion of the anti-duplicative adjustment rule in various sections of the consolidated return regulations would eliminate guidance that is helpful to taxpayers and that establishes certain policy determinations. The IRS and Treasury Department have considered these comments and concluded that it is appropriate to retain the anti-duplicative adjustment rule in the various sections of the consolidated return regulations, but to add a cross reference to the rule in § 1.1502–80(a). To provide additional guidance in § 1.1502–80(a), the final regulations provide that, in determining the application of the anti-duplicative adjustment rule, the purposes of the provisions and single-entity principles are taken into account.

In addition, the final regulations modify the general anti-duplicative adjustment rule in § 1.1502–80 to clarify that its principles apply to adjustments, inclusions, and all similar items.

D. Technical Correction to Text Example in § 1.1502–75(d)(1)

A practitioner informed the IRS and Treasury Department that the rationale in the text example in § 1.1502–75(d)(1) needed modification. Section 1.1502–75(d)(1) provides that a group remains in existence for a tax year if the common parent remains as the common parent and at least one subsidiary that was affiliated with it at the end of the prior year remains affiliated with it at the beginning of the year. It then sets forth an example in which, at the end of 1965, P is the common parent of a group

that includes S and, at the beginning of 1966, P is still the common parent of a group that includes S. The example concludes that the group continues through 1966 even though P acquires another subsidiary and S leaves the group.

The practitioner noted that the result is correct, but that the rationale is misleading and appears to be based on a prior formulation of the continuation of the group rule. Accordingly, these final regulations revise the analysis of this text example so that the rationale reflects the current continuation of the group rule.

E. Amendment to the Section 358 Stock Basis Rules for Certain Triangular Reorganizations

In addition to adopting the proposed technical correction to the cross-reference paragraph in § 1.358–6(e), these final regulations add triangular G reorganizations (other than by statutory merger) to the definition of triangular reorganizations in § 1.358–6(b)(2).

F. Request for Comments on Gain Duplication

Finally, in the preamble to the January 2007 proposal, the IRS and Treasury Department requested comments on the need for a provision that would address the gain duplication that occurs when S stock is sold at a gain and that gain is attributable to unrecognized net appreciation in S's assets. The IRS and Treasury Department have not previously addressed this form of gain duplication directly because taxpayers can structure their transactions to avoid duplicative recognition of the gain, for example, by selling assets directly or by electing to have their stock sales treated as assets sales under section 338. While it is believed that taxpayers generally have adequate means to mitigate this problem, comments were requested.

In response, commentators expressed the view that the IRS and Treasury Department underestimate the frequency and extent of gain duplication and overestimate the efficacy of self-help mechanisms.

Some commentators suggested that gain duplication could be addressed through a section 338-like election, pursuant to which gain recognized on subsidiary stock could be allocated to the basis of the subsidiary's assets, at least to the extent necessary to bring the basis of the assets into conformity with the basis of the stock in the buyer's hands. However, those commentators have explicitly stated that they are not urging this or any other particular model. Moreover, the IRS and Treasury Department have been advised that there is disagreement among commentators and practitioners as to whether the additional burden and complexity inherent in such additional rules would be warranted by the potential relief they could provide.

Accordingly, the IRS and Treasury Department will continue to accept comments and consider this issue.

## Special Analyses

It has been determined that this Treasury decision is not a significant regulatory action as defined in Executive Order 12866. Therefore, a regulatory assessment is not required.

These regulations are necessary to provide taxpayers with immediate guidance regarding the tax consequences of a member's transfer of loss shares of subsidiary stock to prevent the creation and recognition of noneconomic stock loss and prevent the group from obtaining more than one tax loss from a single economic loss. Further, these regulations are necessary to provide taxpayers with immediate guidance regarding various other provisions of the consolidated return regulations. Therefore, good cause is found for dispensing with a delayed effective date pursuant to 5 U.S.C. 553(d)(3).

Pursuant to section 7805(f) of the Internal Revenue Code, the notice of proposed rulemaking preceding these regulations was submitted to the Chief Counsel for Advocacy of the Small Business Administration for comment on its impact on small business.

It is hereby certified that these regulations will not have a significant economic impact on a substantial number of small entities. This certification is based on the fact that these regulations primarily affect affiliated groups of corporations that have elected to file consolidated returns, which tend to be larger businesses. Moreover, the number of taxpayers affected is minimal. Therefore, a Regulatory Flexibility Analysis under the Regulatory Flexibility Act (5 U.S.C. chapter 6) is not required.

## Drafting Information

The principal authors of these regulations are Marcie Barese, Sean Duffley, and Theresa Abell of the Office of Associate Chief Counsel (Corporate). However, other personnel from the IRS and Treasury Department participated in their development.

## List of Subjects

*26 CFR Part 1*

Income taxes, Reporting and recordkeeping requirements.

*26 CFR Part 602*

Reporting and recordkeeping requirements.

## Adoption of Amendments to the Regulations

■ Accordingly, 26 CFR parts 1 and 602 are amended as follows:

## PART 1—INCOME TAXES

■ **Paragraph 1.** The authority citation for part 1 is amended by adding entries in numerical order to read as follows:

**Authority:** 26 U.S.C. 7805 * * *

Section 1.1502–36 also issued under 26 U.S.C. 1502 * * *

Section 1.1502–36 also issued under 26 U.S.C. 337(d). * * *

■ **Par. 2.** Section 1.337(d)–1 is amended by adding two sentences at the end of paragraph (a)(1) to read as follows:

### § 1.337(d)–1 Transitional loss limitation rule.

(a) * * * (1) * * * However, for transactions involving loss shares of subsidiary stock occurring on or after September 17, 2008, see § 1.1502–36. Further, this section does not apply to a transaction that is subject to § 1.1502–36.

* * * * *

■ **Par. 3.** Section 1.337(d)–2 is amended by adding two sentences at the end of paragraph (a)(1) to read as follows:

### § 1.337(d)–2 Loss limitation rules.

(a) * * * (1) * * * However, for transactions involving loss shares of subsidiary stock occurring on or after September 17, 2008, see § 1.1502–36. Further, this section does not apply to a transaction that is subject to § 1.1502–36.

* * * * *

■ **Par. 4.** Section 1.358–6 is amended by:

■ 1. Adding paragraph (b)(2)(v).

■ 2. Revising paragraph (e).

■ 3. Revising the heading for paragraph (f) and adding paragraph (f)(3).

The additions and revisions read as follows:

### § 1.358–6 Stock basis in certain triangular reorganizations.

* * * * *

(b) * * *

(2) * * *

(v) *Triangular G reorganization.* A triangular G reorganization is an acquisition by S (other than by statutory merger) of substantially all of T's assets in a title 11 or similar case in exchange for P stock in a transaction that qualifies as a reorganization under section

368(a)(1)(G) by reason of the application of section 368(a)(2)(D).

* * * * *

(e) *Cross-reference regarding triangular reorganizations involving members of a consolidated group.* For rules relating to stock basis adjustments made as a result of a triangular reorganization in which P and S, or P and T, as applicable, are, or become, members of a consolidated group, see § 1.1502–30. However, if a transaction is a group structure change, stock basis adjustments are determined under § 1.1502–31 and not under § 1.1502–30, even if the transaction also qualifies as a triangular reorganization otherwise subject to § 1.1502–30.

(f) *Effective/applicability dates.* * * *

(3) *Triangular G reorganization and special rule for triangular reorganizations involving members of a consolidated group.* Paragraphs (b)(2)(v) and (e) of this section shall apply to triangular reorganizations occurring on or after September 17, 2008. However, taxpayers may elect to apply paragraph (b)(2)(v) of this section to triangular reorganizations occurring before September 17, 2008 and on or after December 23, 1994.

■ **Par. 5.** Section 1.362–4 is added to read as follows:

**§ 1.362–4 Limitations on built-in loss duplication.**

(a) *Purpose and scope*—(1) *In general.* [Reserved].

(2) *Intercompany transactions.* For rules relating to the application of section 362(e)(2) to transfers between members of a consolidated group on or after October 22, 2004, see § 1.1502–80(h).

(b) [Reserved].

■ **Par. 6.** Section 1.1502–13 is amended by:

1. Revising the heading and adding a new first sentence in paragraph (a)(4).
2. Revising paragraphs (f)(6)(ii), (g)(3)(ii)(B)(*2*), (j)(5)(i)(A).
3. Revising the last sentence of paragraph (f)(6)(iv)(A).
4. Removing the second sentence in paragraph (f)(6)(v).
5. Revising the heading for paragraph (l) and adding two sentences at the end of paragraph (l)(1).

The revisions and additions read as follows:

**§ 1.1502–13 Intercompany transactions.**

(a) * * *

(4) Application of other rules of law. See § 1.1502–80(a) regarding the general applicability of other rules of law and a limitation on duplicative adjustments. * * *

* * * * *

(f) * * *

(6) * * *

(ii) *Gain stock.* For dispositions of P stock occurring before May 16, 2000, see § 1.1502–13(f)(6)(ii) as contained in 26 CFR part 1 in effect on April 1, 2000. For dispositions of P stock occurring on or after May 16, 2000, see § 1.1032–3.

* * * * *

(iv) * * *

(A) * * * If P grants M an option to acquire P stock in a transaction meeting the requirements of § 1.1032–3, M is treated as having purchased the option from P for fair market value with cash contributed to M by P.

* * * * *

(g) * * *

(3) * * *

(ii) * * *

(B) * * *

(*2*) Paragraph (c)(6)(i) of this section (treatment of intercompany items if corresponding items are excluded or nondeductible) will not apply to exclude any amount of income or gain attributable to a reduction of the basis of an intercompany obligation pursuant to sections 108 and 1017 and § 1.1502–28 or to § 1.1502–36(d); and

* * * * *

(j) * * *

(5) * * *

(i) * * *

(A) The acquisition of either the assets of the common parent of the terminating group in a reorganization described in section 381(a)(2), or the stock of the common parent of the terminating group; or

* * * * *

(l) *Effective/applicability dates.* * * *

(1) * * * Paragraphs (a)(4), (f)(6)(ii), (f)(6)(iv)(A), (g)(3)(ii)(B)(*2*), and (j)(5)(i)(A) of this section apply with respect to transactions occurring on or after September 17, 2008. However, taxpayers may elect to apply paragraph (j)(5)(i)(A) of this section to transactions that occurred prior to September 17, 2008.

* * * * *

■ **Par. 7.** Section 1.1502–19 is amended by:

■ 1. Removing the language ''P'' throughout the entire section and adding ''M'' in its place.

■ 2. Adding a new sentence at the end of paragraph (a)(1).

■ 3. Revising paragraphs (a)(3), (c)(1)(iii)(A), and (c)(3)(i)(A).

■ 4. Adding new paragraph (b)(1)(iv).

■ 5. Revising the heading for paragraph (h) and adding three sentences at the end of paragraph (h)(1).

The revisions and additions read as follows:

**§ 1.1502–19 Excess loss accounts.**

(a) *In general*—(1) *Purpose.* * * * This section also provides rules for eliminating losses and other attributes attributable to S in certain cases in which S stock becomes worthless or S ceases to be a member and does not have a separate return year.

* * * * *

(3) *Application of other rules of law, duplicative recapture.* See § 1.1502–80(a) regarding the general applicability of other rules of law and a limitation on duplicative adjustments and recapture.

(b) * * *

(1) * * *

(*iv*) *Reduction of attributes in the case of certain dispositions by worthlessness or where S ceases to be a member and does not become a nonmember.* If this paragraph (b)(1)(iv) applies, any net operating or capital loss carryover that is attributable to S, including any losses that would be apportioned to S under the principles of § 1.1502–21(b)(2) if S had a separate return year, any deferred deductions attributable to S, including S's portion of such consolidated tax attributes (for example, consolidated excess charitable contributions that would be apportioned to S under the principles of § 1.1502–79(e) if S had a separate return year), and any credit carryover attributable to S, including any consolidated credits that would be apportioned to S under the principles of § 1.1502–79 if S had a separate return year, are eliminated. Attributes other than consolidated tax attributes (determined as of the disposition) are eliminated under this paragraph (b)(1)(iv) immediately before the disposition resulting in the application of this paragraph (b)(1)(iv). The elimination of attributes under this paragraph (b)(1)(iv) is not a noncapital, nondeductible expense described in § 1.1502–32(b)(2)(iii). This paragraph (b)(1)(iv) applies if—

(A) A share of S stock becomes worthless under section 165, the requirements of paragraph (c)(1)(iii) of this section are satisfied, M does not recognize a net deduction or loss on the S stock, and S is a member of the group on the day following the last day of the group's taxable year during which the share becomes worthless; or

(B) M recognizes any amount that is not a net deduction or loss on the stock of S in a transaction in which S ceases to be a member and does not become a nonmember.

* * * * *

(c) * * *

(1) * * *

(iii) * * *

(A) All of S's assets (other than its corporate charter and those assets, if

any, necessary to satisfy state law minimum capital requirements to maintain corporate existence) are treated as disposed of, abandoned, or destroyed for Federal income tax purposes (for example, under section 165(a) or § 1.1502–80(c), or, if S's asset is stock of a lower-tier member, the stock is treated as disposed of under this paragraph (c)). An asset of S is not considered to be disposed of or abandoned to the extent the disposition is in complete liquidation of S under section 332 or is in exchange for consideration (other than relief from indebtedness);

* * * * *

(3) * * *

(i) * * *

(A) The acquisition of either the assets of the common parent of the terminating group in a reorganization described in section 381(a)(2), or the stock of the common parent of the terminating group; or

* * * * *

(h) *Effective/applicability dates*—(1) * * * Paragraphs (a)(3), (c)(1)(iii)(A), and (c)(3)(i)(A) of this section apply with respect to determinations and transactions occurring on or after September 17, 2008. However, taxpayers may elect to apply paragraph (c)(3)(i)(A) of this section to transactions that occurred prior to September 17, 2008. The last sentence of paragraph (a)(1) and paragraph (b)(1)(iv) of this section applies with respect to dispositions on or after December 16, 2008.

* * * * *

**§ 1.1502–20 [Removed]**

■ **Par. 8.** Section 1.1502–20 is removed.

**§ 1.1502–20T [Removed]**

■ **Par. 9.** Section 1.1502–20T is removed.

■ **Par. 10.** Section 1.1502–21 is amended by:

■ 1. Removing the last sentence of paragraph (b)(1).

■ 2. Removing paragraph (b)(3)(v).

■ 3. Revising paragraphs (b)(2)(ii)(A), (b)(2)(iv)(B)(*2*)(*iv*), and (h)(6).

■ 4. Adding a new paragraph (b)(2)(iv)(B)(*2*)(v).

■ 5. Revising the heading for paragraph (h) and adding new paragraph (h)(1)(iii).

■ 6. Revising the first sentence of paragraph (h)(8).

The revisions and addition reads as follows:

**§ 1.1502–21 Net operating losses.**

* * * * *

(b) * * *

(2) * * *

(ii) *Special rules*—(A) *Year of departure from group.* If a corporation ceases to be a member during a consolidated return year, net operating loss carryovers attributable to the corporation are first carried to the consolidated return year, then are subject to reduction under section 108 and § 1.1502–28 (regarding discharge of indebtedness income that is excluded from gross income under section 108(a)), and then are subject to reduction under § 1.1502–36 (regarding transfers of loss shares of subsidiary stock). Only the amount that is neither absorbed by the group in that year nor reduced under section 108 and § 1.1502–28 or under § 1.1502–36 may be carried to the corporation's first separate return year. For rules concerning a member departing a subgroup, see paragraph (c)(2)(vii) of this section.

* * * * *

(iv) * * *

(B) * * *

(*2*) * * *

(*iv*) *Reduction of attributes for stock loss.* If during a taxable year a member does not cease to be a member of the group and any portion of the CNOL attributable to any member is reduced under § 1.1502–36, the percentage of the CNOL attributable to each member as of immediately after the reduction of attributes under § 1.1502–36 shall be recomputed pursuant to paragraph (b)(2)(iv)(B)(*2*)(*v*) of this section.

(*v*) *Recomputed percentage.* The recomputed percentage of the CNOL attributable to each member shall equal the unabsorbed CNOL attributable to the member at the time of the recomputation divided by the sum of the unabsorbed CNOL attributable to all of the members at the time of the recomputation. For purposes of the preceding sentence, a CNOL that is reduced under section 108 and § 1.1502–28, or under § 1.1502–36, or that is otherwise permanently disallowed or eliminated, shall be treated as absorbed.

* * * * *

(h) *Effective/applicability dates*—(1) * * *

(iii) Paragraphs (b)(2)(ii)(A) and (b)(2)(iv)(B)(*2*) of this section apply to taxable years for which the due date of the original return (without regard to extensions) is on or after September 17, 2008.

* * * * *

(6) *Certain prior periods.* Paragraphs (b)(1), (b)(2)(iv)(A), (b)(2)(iv)(B)(*1*), and (c)(2)(vii) of this section apply to taxable years for which the due date of the original return (without regard to extensions) is after March 21, 2005. Paragraphs (b)(2)(ii)(A) and (b)(2)(iv)(B)(*2*) (as contained in 26 CFR part 1 revised as of April 1, 2008) apply to taxable years for which the due date of the original return (without regard to extensions) is on or after March 21, 2005, and before September 17, 2008. Paragraph (b)(2)(ii)(A) of this section and § 1.1502–21T(b)(1), (b)(2)(iv), and (c)(2)(vii), as contained in 26 CFR part 1 revised as of April 1, 2004, apply to taxable years for which the due date of the original return (without regard to extensions) is after August 29, 2003, and on or before March 21, 2005. For taxable years for which the due date of the original return (without regard to extensions) is on or before August 29, 2003, see paragraphs (b)(1), (b)(2)(ii)(A), (b)(2)(iv), and (c)(2)(vii) of this section and § 1.1502–21T(b)(1) as contained in 26 CFR part 1 revised as of April 1, 2003.

* * * * *

(8) *Losses treated as expired under § 1.1502–35(f)(1).* For rules regarding losses treated as expired under § 1.1502–35(f) on or after March 10, 2006, see § 1.1502–21(b)(3)(v) as contained in 26 CFR part 1 in effect on April 1, 2006. * * *

■ **Par. 11.** Section 1.1502–30 is amended by:

■ 1. Revising paragraph (b)(4).

■ 2. Revising the heading for paragraph (c) and adding a second sentence.

The revision and addition reads as follows:

**§ 1.1502–30 Stock basis after certain triangular reorganizations.**

* * * * *

(b) * * *

(4) *Application of other rules of law.* If a transaction otherwise subject to this section is also a group structure change subject to § 1.1502–31, the provisions of § 1.1502–31 and not this section apply to determine stock basis. See § 1.1502–80(a) regarding the general applicability of other rules of law and a limitation on duplicative adjustments. See § 1.1502–80(d) for the non-application of section 357(c) to P.

* * * * *

(c) *Effective/applicability date.* * * * However, paragraph (b)(4) of this section applies to reorganizations occurring on or after September 17, 2008.

■ **Par. 12.** Section 1.1502–31 is amended by:

■ 1. Revising paragraph (a)(2).

■ 2. Revising the heading for paragraph (h) and revising paragraph (h)(1).

■ 3. Removing paragraphs (i) and (j).

The revisions read as follows:

**§ 1.1502–31 Stock basis after a group structure change.**

(a) * * *

(2) *Application of other rules of law.* If a transaction subject to this section is also a triangular reorganization otherwise subject to § 1.1502–30, the provisions of this section and not those of § 1.1502–30 apply to determine stock basis. See § 1.1502–80(a) regarding the general applicability of other rules of law and a limitation on duplicative adjustments.

* * * * *

(h) *Effective/applicability dates*—(1) *General rule.* This section applies to group structure changes that occur after April 26, 2004. However, a group may apply this section to group structure changes that occurred on or before April 26, 2004, and in consolidated return years beginning on or after January 1, 1995. In addition, paragraph (a)(2) of this section applies to group structure changes that occurred on or after September 17, 2008. Paragraph (e)(2) of this section applies to any original consolidated Federal income tax return due (without extensions) after June 14, 2007. For original consolidated Federal income tax returns due (without extensions) after May 30, 2006, and on or before June 14, 2007, see § 1.1502–31T as contained in 26 CFR part 1 in effect on April 1, 2007. For original consolidated Federal income tax returns due (without extensions) on or before May 30, 2006, see § 1.1502–31 as contained in 26 CFR part 1 in effect on April 1, 2006.

* * * * *

■ **Par. 13.** Section 1.1502–32 is amended by:

■ 1. Removing the language ''P'' throughout the entire section and adding ''M'' in its place.

■ 2. Revising the heading, adding a new first sentence, and removing the last two sentences in paragraph (a)(2).

■ 3. Revising paragraphs (b)(3)(ii)(C)(*2*), (c)(1), and (c)(2)(i).

■ 4. Revising the first sentence of paragraphs (c)(2)(ii)(A) and (c)(3), and the first three sentences of paragraph (c)(4)(i), introductory text.

■ 5. Removing paragraphs (b)(3)(iii)(C) and (b)(3)(iii)(D).

■ 6. Revising the heading for paragraph (h) and adding paragraph (h)(9).

The revisions and addition read as follows:

**§ 1.1502–32 Investment adjustments.**

(a) * * *

(2) *Application of other rules of law, duplicative adjustments.* See § 1.1502–80(a) regarding the general applicability of other rules of law and a limitation on duplicative adjustments. * * *

* * * * *

(b) * * *

(3) * * *

(ii) * * *

(C) * * *

(*2*) *Expired loss carryovers.* If the amount of the discharge exceeds the amount of the attribute reduction under sections 108 and 1017, and § 1.1502–28, the excess nevertheless is treated as applied to reduce tax attributes to the extent a loss carryover attributable to S expired without tax benefit, the expiration was taken into account as a noncapital, nondeductible expense under paragraph (b)(3)(iii) of this section, and the loss carryover would have been reduced had it not expired.

* * * * *

(c) *Allocation of adjustments among shares of stock*—(1) *In general*—(i) *Distributions.* The adjustment that is described in paragraph (b)(2)(iv) of this section (negative adjustments for distributions) is allocated to the shares of S stock to which the distribution relates.

(ii) *Special rules applicable in the case of certain loss transfers of subsidiary stock*—(A) *Losses reattributed pursuant to an election under § 1.1502–36(d)(6)*—(*1*) *General rule.* If a member transfers loss shares of S stock and the common parent elects under § 1.1502–36(d)(6) to reattribute all or a portion of S's attributes, S's resulting noncapital, nondeductible expense is allocated to all loss shares of S stock transferred by members in the transaction. The expense is allocated among those S shares in proportion to the loss in the shares. The tier-up of that expense is included in the remaining adjustment (see paragraph (c)(1)(iii) of this section).

(*2*) *Reattribution of attributes of a subsidiary that is lower-tier to S.* If a member transfers loss shares of S stock and the common parent elects under § 1.1502–36(d)(6) to reattribute attributes of a subsidiary (S2) that is lower-tier to S, S2's resulting noncapital, nondeductible expense is allocated among S2 shares held by members as of the transaction, other than those transferred in the transaction and with respect to which gain or loss was recognized (recognition transfer), in a manner that permits the full amount of the expense to tier up and be applied to the bases of the loss shares of S stock transferred by members in the transaction. The expense is allocated among those S2 shares with positive basis in a manner that, first, reduces the bases of S2's preferred shares to equalize and then eliminate loss and, second, reduces the bases of S2's common shares in a manner that reduces disparity among the bases of those common shares to the greatest extent possible. The noncapital, nondeductible expense applied to the S2 shares tiers up and is applied to the stock of any subsidiaries that are lower-tier to S (middle-tier subsidiaries) in a manner that will permit the full amount of this expense to be applied to reduce the bases of the loss shares of S stock transferred by members in the transaction. Similar to the allocation among the S2 shares, the tier-up of this expense is allocated among the middle-tier subsidiary shares held by members as of the transaction, other than those transferred in a recognition transfer, in a manner that permits the full amount of the expense to tier up and be applied to the bases of the loss shares of S stock transferred by members in the transaction. The tier-up of this expense is allocated among those middle-tier subsidiary shares with positive basis in a manner that, first, reduces the bases of the middle-tier subsidiary's preferred shares to equalize and then eliminate loss and, second, reduces the bases of the middle-tier subsidiary's common shares in a manner that reduces disparity among the bases of those common shares to the greatest extent possible. The tier-up of this expense is allocated to the loss shares of S stock transferred by members in the transaction in the same manner as provided in paragraph (c)(1)(ii)(A)(*1*) of this section, and thereafter the tier-up of that expense is included in the remaining adjustment (see paragraph (c)(1)(iii) of this section).

(*3*) *Example.* The following example illustrates the rules of this paragraph (c)(1)(ii)(A).

*Example.* Assume P owns M1, P and M1 own M2, M2 owns S, M1 and S own S1, and M1 and S1 own S2. If S sells a portion of the S1 shares at a gain and M2 sells all of the S stock at a net loss (after adjusting the basis for the gain recognized by S on the sale of the S1 shares), and P elects under § 1.1502–36(d)(6) to reattribute attributes of S2, the resulting noncapital, nondeductible expense is allocated entirely to the S2 shares held by S1 with positive basis in a manner that reduces the disparity in those bases to the greatest extent possible. The tier-up of this amount is allocated entirely to the S1 shares held by S (excluding the S1 shares sold) with positive basis in a manner that reduces the disparity in those bases to the greatest extent possible. The tier-up of this amount is allocated to the loss shares of S stock sold by M2 in proportion to the loss in those shares. The tier-up of this amount is then included in the remaining adjustment and tiers up from M2 to M1 and P, and from M1 to P under the general rules of this section.

(B) *Tier-up of reallocated investment adjustments subject to prior use limitation.* If the reallocation of an investment adjustment under § 1.1502–36(b)(2) is subject to the prior use limitation in § 1.1502–36(b)(2)(iii)(B)(2), no amount of the tier-up of such reallocated investment adjustment shall be allocated to any share whose prior use resulted in the application of the limitation. Thereafter, the tier-up of this amount is included in the remaining adjustment (see paragraph (c)(1)(iii) of this section).

(iii) *Remaining adjustment.* The *remaining adjustment* is the adjustment that consists of the items described in paragraphs (b)(2)(i) through (b)(2)(iii) of this section (adjustments for taxable income or loss, tax-exempt income, and noncapital, nondeductible expenses), including adjustments to lower-tier stock basis that tier up under paragraph (a)(3)(iii) of this section, but only to the extent not specially allocated under paragraph (c)(1)(ii) of this section. The remaining adjustment is allocated among the shares of S stock as provided in paragraphs (c)(2) through (c)(4) of this section. If the remaining adjustment is positive, it is allocated first to any preferred stock as provided in paragraph (c)(3) of this section, and then to the common stock as provided in paragraph (c)(2) of this section. If the remaining adjustment is negative, it is allocated only to common stock as provided in paragraph (c)(2) of this section.

(iv) *Nonmember shares.* No adjustment under this section that is allocated to a share for the period it is owned by a nonmember affects the basis of the share.

(v) *Cross-references.* See paragraph (c)(4) of this section for the reallocation of adjustments, and paragraph (d) of this section for definitions. See § 1.1502–19(d) for special allocations of basis determined or adjusted under the Internal Revenue Code (Code) with respect to excess loss accounts.

(2) *Common stock*—(i) *Allocation within a class.* The remaining adjustment described in paragraph (c)(1)(iii) of this section that is allocable to a class of common stock is generally allocated equally to each share within the class. However, if a member has an excess loss account in a share of a class of common stock at the time a positive remaining adjustment is to be allocated, the portion of the positive remaining adjustment allocable to the member with respect to the class is allocated first to equalize and then eliminate that member's excess loss accounts. It is then allocated equally among the members' shares in that class. Similarly, the portion of any negative remaining adjustment allocable to the member with respect to the class is allocated equally to the member's shares with positive bases, eliminating all positive basis in shares of the class before creating or increasing any excess loss accounts. After positive basis is eliminated, any remaining portion of the negative remaining adjustment is allocated to equalize the member's excess loss accounts in the shares of that class to the greatest extent possible. Distributions and any adjustments or determinations under the Internal Revenue Code (for example, under section 358, including any modifications under § 1.1502–19(d)) are taken into account before the allocation is made under this paragraph (c)(2)(i).

(ii) * * *

(A) * * * If S has more than one class of common stock, the extent to which the remaining adjustment described in paragraph (c)(1)(iii) of this section is allocated to each class is determined, based on consistently applied assumptions, by taking into account the terms of each class and all other facts and circumstances relating to the overall economic arrangement. * * *

* * * * *

(3) * * * If the remaining adjustment described in paragraph (c)(1)(iii) of this section is positive, it is allocated to preferred stock to the extent required (when aggregated with prior allocations to the preferred stock during the period that S is a member of the consolidated group) to reflect distributions described in section 301 (and all other distributions treated as dividends) to which the preferred stock becomes entitled, and arrearages arising, during the period that S is a member of the consolidated group. * * *

* * * * *

(4) * * * (i) * * * A member's basis in each share of S preferred and common stock must be redetermined whenever necessary to determine the tax liability of any person. See paragraph (b)(1) of this section. The redetermination is made by reallocating S's adjustments described in paragraphs (c)(1)(ii)(B) (specially allocated adjustments for tier-up of reallocated investment adjustments subject to prior use limitation) and (c)(1)(iii) (remaining adjustments) of this section for each consolidated return year (or other applicable period) of the group by taking into account all of the facts and circumstances affecting allocations under this paragraph (c) as of the redetermination date with respect to all of the S shares. * * *

* * * * *

(h) *Effective/applicability date.* * * *

(9) *Allocations of investment adjustments, including adjustments attributable to certain loss transfers; certain conforming amendments.* Paragraphs (a)(2), (b)(3)(ii)(C)(*2*), (c)(1), (c)(2)(i), (c)(2)(ii)(A), (c)(3), and (c)(4)(i) of this section are applicable for determinations of the basis of stock of a subsidiary on or after September 17, 2008.

* * * * *

**§ 1.1502–32T [Removed]**

■ **Par. 14.** Section 1.1502–32T is removed.

■ **Par. 15.** Section 1.1502–33 is amended by:

■ 1. Revising the heading and adding a new first sentence to paragraph (a)(2).

■ 2. Revising paragraph (e)(2)(i)(A).

■ 3. Revising the heading for paragraph (j) and adding two sentences to the end of paragraph (j)(1).

The additions and revision read as follows:

**§ 1.1502–33 Earnings and profits.**

(a) * * *

(2) *Application of other rules of law, duplicative adjustments.* See § 1.1502–80(a) regarding the general applicability of other rules of law and a limitation on duplicative adjustments. * * *

* * * * *

(e) * * *

(2) * * *

(i) * * *

(A) The acquisition of either the assets of the common parent of the terminating group in a reorganization described in section 381(a)(2), or the stock of the common parent of the terminating group; or

* * * * *

(j) *Effective/applicability date*—(1) * * * Paragraphs (a)(2) and (e)(2)(i)(A) of this section apply with respect to determinations of the earnings and profits of a member in consolidated return years beginning on or after September 17, 2008. However, taxpayers may elect to apply paragraph (e)(2)(i)(A) of this section with respect to determinations of the earnings and profits of a member in consolidated return years beginning prior to September 17, 2008.

* * * * *

■ **Par. 16.** Section 1.1502–35 is amended by:

■ 1. Revising paragraphs (a), (c)(3), (c)(4)(i), (c)(5)(i), (g)(3), (g)(6), (h), and (j).

■ 2. Revising the heading of paragraph (c)(8).

■ 3. Removing paragraph (k).

**§ 1.1502–35 Transfers of subsidiary stock and deconsolidations of subsidiaries.**

(a) *In general*—(1) *Purpose.* The purpose of this section is to prevent a group from obtaining more than one tax benefit from a single economic loss. The provisions of this section shall be construed in a manner that is consistent with that purpose and in a manner that reasonably carries out that purpose.

(2) *Dates of applicability.* This section applies if—

(i) On or after March 7, 2002, a member recognizes a loss on the disposition of a share of stock of a subsidiary (or, on or after April 10, 2007, a share of stock of a former subsidiary) or a carryover basis asset (subject to paragraph (c)(6) of this section),

(ii) The member's loss on the share of subsidiary stock or the carryover basis asset is allowed on or before the date that is ten years after the disposition of the share or carryover basis asset, and

(iii) If the disposition is of a share of subsidiary stock, it is not a transfer to which § 1.1502–36 applies.

* * * * *

(c) * * *

(3) *Treatment of suspended loss*—(i) *General rule.* For purposes of the rules of § 1.1502–32, any loss suspended pursuant to paragraph (c)(1) or (c)(2) of this section is treated as a noncapital, nondeductible expense of the member that disposes of subsidiary stock, incurred during the taxable year that includes the date of the disposition of stock to which paragraph (c)(1) or (c)(2) of this section applies. See § 1.1502–32(b)(3)(iii)(C). Consequently, the basis of a higher-tier member's stock of the member that disposes of subsidiary stock is reduced by the suspended loss in the year it is suspended.

(ii) *Location of suspended loss following deconsolidation of selling member.* If a member recognizes a loss that is suspended under this paragraph (c) but that member ceases to be a member of the group before the loss is allowable, the common parent is treated as succeeding to the loss in a transaction to which section 381(a) applies.

(4) *Reduction of suspended loss*—(i) *General rule.* The amount of any loss suspended pursuant to paragraph (c)(1) or (c)(2) of § 1.1502–35 shall be reduced, but not below zero, by the subsidiary's (and any successor's) items of deduction and loss, and the subsidiary's (and any successor's) allocable share of items of deduction and loss of all lower-tier subsidiaries, that are allocable to the period beginning on the date of the disposition that gave rise to the suspended loss and ending on the day before the first date on which the subsidiary (and any successor) is not a member of the group of which it was a member immediately prior to the disposition (or any successor group), and that are taken into account in determining consolidated taxable income (or loss) of such group for any taxable year that includes any date on or after the date of the disposition and before the first date on which the subsidiary (and any successor) is not a member of such group; provided, however, that such reduction shall not exceed the excess of the amount of such items over the amount of such items that are taken into account in determining the basis adjustments made under § 1.1502–32 to stock of the subsidiary (or any successor) owned by members of the group. The preceding sentence shall not apply to items of deduction and loss to the extent that the group can establish that all or a portion of such items was not reflected in the computation of the duplicated loss with respect to the subsidiary on the date of the disposition of stock that gave rise to the suspended loss.

* * * * *

(5) *Allowable loss*—(i) *General rule.* To the extent not reduced under paragraph (c)(4) of this section, any loss suspended pursuant to paragraph (c)(1) or (c)(2) of this section shall be allowed, to the extent otherwise allowable under applicable provisions of the Internal Revenue Code and regulations, on a return filed by the group of which the subsidiary was a member on the date of the disposition of subsidiary stock that gave rise to the suspended loss (or any successor group) for the taxable year that includes the earlier of—

(A) The day before the first date on which the subsidiary (and any successor) is not a member of such group or the date the group is allowed a worthless stock loss under section 165 (taking into account the provisions of § 1.1502–80(c)) with respect to all of the subsidiary stock owned by members and;

(B) The date that is ten years after the date of the disposition of subsidiary stock that gave rise to the suspended loss.

* * * * *

(8) *No elimination of economic loss.* * * *

* * * * *

(g) * * *

(3) *Anti-loss reimportation rule*—(i) *Conditions for application.* This paragraph (g)(3) applies when—

(A) A member of a group (selling group) recognized and was allowed a loss with respect to a share of stock of S, a subsidiary or former subsidiary of the selling group;

(B) That stock loss was duplicated (in whole or in part) in S's attributes (duplicating items) at the earlier of the time that the loss was recognized or that S ceased to be a member; and

(C) Within ten years of the date that S ceased to be a member, there is a reimportation event. For this purpose, a reimportation event is any event after which a duplicating item is a reimported item. A reimported item is any duplicating item that is reflected in the attributes of any member of the selling group, including S, or, if not reflected in the attributes, would be properly taken into account by any member of the selling group (for example as the result of a carryback).

(ii) *Effect of application.* Immediately before the time that a reimported item (or any portion of a reimported item) would be properly taken into account (but for the application of this paragraph (g)(3)), such item (or such portion of the item) is reduced to zero and no deduction or loss is allowed, directly or indirectly, with respect to that item.

(iii) *Operating rules.* For purposes of this paragraph (g)(3)—

(A) The terms *member, subsidiary,* and *group* include their predecessors and successors to the extent necessary to effectuate the purposes of this section; and

(B) The reduction of a reimported item (other than duplicating items that are carried back to a consolidated return year of the selling group) is a noncapital, nondeductible expense within the meaning of § 1.1502–32(b)(3)(iii).

* * * * *

(6) *General anti-avoidance rule.* If a taxpayer acts with a view to avoid the purposes of this section, appropriate adjustments will be made to carry out the purposes of this section.

(h) *Application of other rules of law.* See § 1.1502–80(a) regarding the general applicability of other rules of law.

* * * * *

(j) *Effective/applicability dates.* This section applies with respect to stock transfers, deconsolidations of subsidiaries, determinations of worthlessness, and stock dispositions on or after September 17, 2008. For prior law, see §§ 1.1502–35 and 1.1502–35T as contained in 26 CFR part 1 in effect on April 1, 2008.

**§ 1.1502–35T [Removed]**

■ **Par. 17.** Section 1.1502–35T is removed.

■ **Par. 18.** Section 1.1502–36 is added to read as follows:

**§ 1.1502–36 Unified loss rule.**

(a) *In general*—(1) *Scope.* This section provides rules for adjusting members' bases in stock of a subsidiary (S) and for reducing S's attributes when a member (M) transfers a loss share of S stock. See paragraph (f) of this section for definitions of the terms used in this section, including *transfer* and *value.*

(2) *Purpose.* The rules in this section have two principal purposes. The first is to prevent the consolidated return provisions from reducing a group's consolidated taxable income through the creation and recognition of noneconomic loss on S stock. The second is to prevent members (including former members) of the group from collectively obtaining more than one tax benefit from a single economic loss. Additional purposes are set forth in other paragraphs of this section. The rules of this section must be interpreted and applied in a manner that is consistent with and reasonably carries out the purposes of this section.

(3) *Overview*—(i) *General application of section.* This section applies when M transfers a share of S stock and, after taking into account the effects of all applicable rules of law (even if the adjustments required by such provisions are not deemed effective until after the transfer, such as certain adjustments required under sections 108 and 1017 and § 1.1502–28), the share is a loss share. When this section applies, paragraph (b) of this section applies first and may redetermine members' bases in their shares of S stock. If the transferred share is a loss share after any basis redetermination under paragraph (b) of this section, paragraph (c) of this section applies and may reduce M's basis in the transferred loss share. If the transferred share is a loss share after any basis reduction required by paragraph (c) of this section, paragraph (d) of this section applies and may reduce attributes of S and subsidiaries that are lower-tier to S. Although the determination of whether there is a transfer of a loss share is made as of the transfer, this section applies, and any adjustments it requires are given effect, immediately before the transfer. Paragraphs (e), (f), and (g) of this section provide general operating rules (including rules for transfers of S stock between members), definitions, and an anti-abuse rule, respectively.

(ii) *Stock of multiple subsidiaries transferred in the transaction*—(A) *Initial application of section to transferred shares in lowest tier.* If shares of stock of more than one subsidiary are transferred in a transaction, the application of this section begins at the lowest tier. If no transferred shares of stock of the lowest-tier subsidiary (S2) are loss shares, any gain recognized with respect to the S2 shares immediately tiers up and adjusts members' bases in subsidiary stock under § 1.1502–32. However, if any of the transferred S2 shares are loss shares, paragraph (b) of this section applies with respect to those shares. If, after the application of paragraph (b) of this section, any transferred S2 shares are still loss shares, paragraph (c) of this section applies with respect to those shares. If, after the application of paragraph (c) of this section, any transferred S2 shares are still loss shares and P makes an election under paragraph (d)(6) of this section with respect to those S2 shares, then paragraph (d) of this section applies with respect to those shares, but only to the extent necessary to give effect to the election. After taking into account the effects of any adjustments required by this initial application of this section, recognized gain or loss is computed on all transferred S2 shares. Any adjustments under paragraph (b) or (c) of this section, the effect of any election under paragraph (d)(6) of this section, any gain or loss recognized on the transferred S2 shares (whether allowed or disallowed), and any other related or resulting adjustments then tier-up and apply to adjust members' bases in subsidiary stock under § 1.1502–32.

(B) *Initial application of section to transferred shares in higher tiers.* After taking into account the effects of any adjustments described in paragraph (a)(3)(ii)(A) of this section, transferred shares in the next higher tier, and then in each next higher tier successively, other than the transferred loss shares at the highest tier, are treated in the manner described in paragraph (a)(3)(ii)(A) of this section.

(C) *Application of section to transferred shares in highest tier.* After paragraphs (b) and (c) of this section, and, to the extent necessary to give effect to any election under paragraph (d)(6) of this section, paragraph (d) of this section, have been applied to or with respect to all lower-tier transferred loss shares, and after all lower-tier adjustments have been taken into account (whether resulting from the application of paragraph (b) or (c) of this section, an election under paragraph (d)(6) of this section, the recognition of gain or loss on a transfer, or otherwise), paragraphs (b), then (c), and then (d) of this section apply with respect to the highest-tier shares that are transferred loss shares.

(D) *Final application of section to transferred shares in lower tiers.* After paragraph (d) of this section has been applied with respect to transferred loss shares in the highest tier, it is applied with respect to transferred shares in each next lower tier, successively, to the extent such shares are loss shares after the application of paragraph (d) of this section.

(4) *Other rules of law and coordination with deferral and disallowance provisions.* In general, this section applies and has effect immediately upon the transfer of a loss share even if the loss is deferred, disallowed, or otherwise not taken into account under any other applicable rules of law. However, see paragraph (e)(3) of this section for special rules applicable to shares of S stock transferred in an intercompany transaction. See section § 1.1502–80(a) for the general applicability of other rules of law and a limitation on duplicative adjustments.

(5) *Nomenclature, factual assumptions adopted in this section.* Unless otherwise stated, for purposes of this section, the following nomenclature and assumptions are adopted. P is the common parent of a consolidated group of which S, M, and M1 are members. X is not a member of the P group. If a corporation has preferred stock outstanding, it is stock described in section 1504(a)(4). The examples set forth the only facts, elections, and activities relevant to the example. All transactions are between unrelated persons and are independent of each other. Tax liabilities and their effect, and the application of any other loss disallowance or deferral provisions of the Internal Revenue Code (Code) or regulations, including but not limited to section 267, are disregarded. All persons report on a calendar year basis and use the accrual method of accounting. All parties comply with filing and other requirements of this section and all other provisions of the Code and regulations.

(b) *Basis redetermination to reduce disparity*—(1) *In general*—(i) *Purpose and scope.* The rules of this paragraph (b) reduce the extent to which there is disparity in members' bases in shares of S stock. These rules supplement the operation of the investment adjustment system; their purpose is to prevent the realization of noneconomic loss and facilitate the elimination of duplicated loss when members hold S shares with disparate bases. The rules of this paragraph (b) only reallocate investment adjustments previously applied to members' bases in shares of S stock, thus they do not alter the aggregate amount of basis in shares of S stock held by members or the aggregate amount of

investment adjustments applied to shares of S stock.

(ii) *Special rules for applicability of redetermination rule.* Notwithstanding the general rule in paragraph (b)(2) of this section, members' bases in shares of S stock are not redetermined under this paragraph (b) if—

(A) There is no disparity among members' bases in shares of S common stock and no member owns a share of S preferred stock with respect to which there is unrecognized gain or loss; or

(B) All the shares of S stock held by members are transferred to one or more nonmembers, become worthless under section 165 (taking into account the provisions of § 1.1502–80(c)), or a combination thereof, in one fully taxable transaction. However, in such a case, P may elect to redetermine such bases under this paragraph (b). Such an election is made in the manner provided in paragraph (e)(5) of this section. If stock of more than one subsidiary is transferred in the transaction, the election may be made with respect to one or more of such subsidiaries.

(iii) *Investment adjustment.* For purposes of this paragraph (b), the term *investment adjustment* includes adjustments specially allocated under § 1.1502–32(c)(1)(ii)(B) and remaining adjustments described in § 1.1502–32(c)(1)(iii). In applying any provision of this section, the term includes all such adjustments reflected in the basis of the share as of the application of the provision, whether originally allocated under § 1.1502–32 or otherwise. The term therefore includes adjustments previously reallocated to the share, and it does not include adjustments previously reallocated from the share, whether pursuant to this section or any other provision of law. It also includes the proportionate amount of adjustments reflected in the exchanged basis of a share, such as the basis determined under section 358 in connection with a reorganization or a transaction qualifying under section 355.

(2) *Basis redetermination rule.* If M transfers a loss share of S stock, all members' bases in all their shares of S stock are subject to redetermination under this paragraph (b). The determination of whether a share is a loss share is made as of the transfer, taking into account the effects of all applicable rules of law. The redeterminations are made immediately before applying paragraph (c) of this section and in accordance with the following:

(i) *Decreasing the bases of transferred loss shares*—(A) *Removing positive investment adjustments from transferred loss shares of common stock.* M's basis in each of its transferred loss shares of S common stock is first reduced, but not below value, by removing positive investment adjustments previously applied to the basis of the share. The positive investment adjustments removed from transferred loss shares of S common stock are reallocated under paragraph (b)(2)(ii) of this section after negative investment adjustments are reallocated under paragraph (b)(2)(i)(B) of this section.

(B) *Reallocating negative investment adjustments from shares of S common stock.* If a transferred share is still a loss share after applying paragraph (b)(2)(i)(A) of this section, M's basis in the share is reduced, but not below value, by reallocating negative investment adjustments to the transferred loss share (whether common or preferred stock) from members' shares of S common stock that are not transferred loss shares. The adjustments reallocated under this paragraph (b)(2)(i)(B) are reallocated and applied first to M's bases in transferred loss shares of S preferred stock and then to M's bases in transferred loss shares of S common stock. Reallocations under this paragraph (b)(2)(i)(B) are made in a manner that, to the greatest extent possible, reduces the disparity among members' bases in all transferred loss shares of S preferred stock, and reduces the disparity among members' bases in all shares of S common stock.

(ii) *Increasing the bases of gain preferred and all common shares*—(A) *Preferred stock.* After the application of paragraph (b)(2)(i) of this section, the positive investment adjustments removed from transferred loss shares of S common stock under paragraph (b)(2)(i)(A) of this section are reallocated and applied to increase, but not above value, members' bases in shares of S preferred stock (without regard to whether such shares are transferred in the transaction). Reallocations under this paragraph (b)(2)(ii)(A) are made in a manner that, to the greatest extent possible, reduces the disparity among members' bases in all shares of S preferred stock.

(B) *Common stock.* Any positive investment adjustments removed from transferred loss shares of S common stock under paragraph (b)(2)(i)(A) of this section and not reallocated and applied to S preferred shares are reallocated and applied to increase members' bases in shares of S common stock. Reallocations are made to shares of S common stock without regard to whether a particular share is a loss share or a transferred share, and without regard to the share's value. Reallocations under this paragraph (b)(2)(ii)(B) are made in a manner that, to the greatest extent possible, reduces the disparity among members' bases in all shares of S common stock.

(iii) *Operating rules*—(A) *Method.* In general, reallocations should be made first with respect to the earliest available adjustments. However, the overall application of this paragraph (b) to a transaction must be made in a manner that, to the greatest extent possible, reduces basis disparity (as provided in paragraphs (b)(2)(i)(B) and (b)(2)(ii) of this section). The specific reallocation of an investment adjustment under this paragraph (b) may be made using any reasonable method or formula that is consistent with the provisions of this paragraph (b)(2) and furthers the purposes of this section.

(B) *Limits on reallocation*—(*1*) *Restriction to members' outstanding shares.* Investment adjustments can only be reallocated to shares that were held by members at the time the adjustment was originally applied.

(*2*) *Limitation by prior use*—(*i*) *In general.* In order to prevent the reallocation of investment adjustments from either increasing or decreasing members' aggregate bases in subsidiary stock, no investment adjustment (positive or negative) may be reallocated under this paragraph (b)(2) to the extent that it was (or would have been) used prior to the time that it would otherwise be reallocated under this paragraph (b)(2). For this purpose, an investment adjustment was used (or would have been used) to the extent that it was reflected in (or would have been reflected in) the basis of a share of subsidiary stock and the basis of that share has already been taken into account, directly or indirectly, in determining income, gain, deduction, or loss (including by affecting the application of this section to a prior transfer of subsidiary stock) or in determining the basis of any property that is not subject to § 1.1502–32. However, if the prior use was in an intercompany transaction, an investment adjustment may be reallocated to the extent that § 1.1502–13 has prevented the gain or loss on the transaction from being taken into account. (In that case, appropriate adjustments must be made to the intercompany item from the prior intercompany transaction that has not yet been taken into account.) Further, if an investment adjustment was reflected in (or would have been reflected in) the basis of a share that has been taken into account, the limitation on reallocation under this paragraph (b)(2)(iii)(B)(*2*)

does not apply to the extent the basis of that share would not change as a result of the reallocation (for example, because the reallocation is between shares that are both lower-tier to the share with the previously used basis). See § 1.1502–32(c)(1)(ii)(B) regarding special allocations applicable to the tier-up of the reallocated investment adjustment if the reallocation is limited under this paragraph (b)(2)(iii)(B)(*2*) due to prior use at a higher tier.

*(ii) Example.* The application of this paragraph (b)(2)(iii)(B)(*2*) is illustrated by the following example:

*Example.* (i) *Facts.* P owns all 20 shares of M stock, and 10 shares of S stock. M owns the remaining 10 shares of S stock. In year 1, S recognizes $200 of income that results in a $10 positive investment adjustment being allocated to each share of S stock. The group does not recognize any other items. The $100 positive adjustment to M's basis in the S stock tiers up, and results in a $5 positive adjustment to each share of M stock. In year 2, P sells one share of M stock and recognizes a gain. In year 3, M sells one loss share of S stock, and this paragraph (b) applies and requires a reallocation of the year 1 positive investment adjustment applied to the basis of the transferred S share.

(ii) *Application of limitation by prior use.* M's basis in the transferred loss share of S stock reflects a $10 positive investment adjustment attributable to S's year 1 income. Under the general rule of this paragraph (b), that $10 would be subject to reallocation to reduce basis disparity. However, that $10 adjustment had originally tiered up to adjust P's basis in its M shares and, as a result, $.50 of that adjustment was reflected in P's basis in each share of M stock. When P sold the share of M stock, the basis of that share (which included the tiered-up $.50) was used in determining the gain on the sale. Thus, $.50 of the $10 investment adjustment originally allocated to the transferred S share that tiered-up to the sold M share was previously used and, as such, cannot be reallocated in a manner that would (if it were the original allocation) affect the basis of the sold M share. Accordingly, no more than $9.50 of the adjustment to M's transferred S share could be reallocated to P's shares of S stock. If so, under the special allocation rule in § 1.1502–32(c)(1)(ii)(B), the tier-up of this $9.50 would only be allocated among P's remaining 19 shares of M stock. Alternatively, all $10 of the investment adjustment could be reallocated to M's other S shares (because the tier-up to P's M shares would have been the same regardless which of M's shares of S stock were adjusted).

(iii) *Application of limitation where adjustment would have been used.* The facts are the same as in paragraph (i) of this *Example* except that M does not sell any shares of S stock and, in year 3, P sells a loss share of S stock. As in paragraph (i) of this *Example*, when P sold the share of M stock, the basis of that share was used in determining the gain on the share. When P sells the loss share of S stock, the $10 positive investment adjustment from S's year 1 income cannot be reallocated in a manner that would (if it were the original adjustment) affect the basis of the sold M share. If this $10 positive investment adjustment had originally been allocated to the S shares held by M, $.50 of the $10 investment adjustment would have tiered up to the M share that P sold, would have been reflected in P's basis in that M share, and would have been used in determining P's gain or loss on the sale. Accordingly, up to $9.50 of the $10 investment adjustment applied to the basis of P's transferred S share could be reallocated to M's shares of S stock. If so, under the special allocation rule in § 1.1502–32(c)(1)(ii)(B), the tier-up of this $9.50 would only be allocated among P's remaining 19 shares of M stock. Alternatively, all $10 of the investment adjustment could be reallocated to P's other S shares.

(3) *Examples.* The general application of this paragraph (b) is illustrated by the following examples:

*Example 1. Transfer of stock received in section 351 exchange.* (i) *Redetermination to prevent noneconomic loss.* (A) *Facts.* For many years, M has owned two assets, Asset 1 and Asset 2. On January 1, year 1, M receives the only four outstanding shares of S common stock (Block 1 shares) in exchange for Asset 1, which has a basis and value of $80. Section 351 applies to the exchange and, therefore, under section 358, M's aggregate basis in the Block 1 shares is $80 ($20 per share). On July 1, year 2, M receives another share of S common stock (Block 2 share) in exchange for Asset 2, which has a basis of $0 and value of $20. Section 351 applies to this exchange and, under section 358, M's basis in the Block 2 share is $0. On October 1, year 3, S sells Asset 2 for $20, recognizing a $20 gain. On December 31, year 3, M sells one of its Block 1 shares to X for $20. After taking into account the effects of all applicable rules of law, M's basis in each Block 1 share is $24 (M's original $20 basis increased under § 1.1502–32 by $4, the share's allocable portion of the $20 gain recognized on the sale of Asset 2). In addition, M's basis in its Block 2 share is $4 (M's original $0 basis increased under § 1.1502–32 by $4 (the share's allocable portion of the $20 gain recognized on the sale of Asset 2)). M's sale of the Block 1 share is a transfer of a loss share and therefore subject to this section.

(B) *Basis redetermination under this paragraph (b).* Under this paragraph (b), M's bases in all its shares of S stock are subject to redetermination. First, paragraph (b)(2)(i)(A) of this section applies to reduce M's basis in the transferred loss share, but not below value, by removing positive investment adjustments applied to the basis of the share. Accordingly, M's basis in the transferred Block 1 share is reduced by $4 (the amount of the positive investment adjustment applied to the share), from $24 to $20. Even if there were negative investment adjustments applied to adjust the bases of nontransferred common shares, no further reduction to the basis of the share would be required under this paragraph (b) because the basis of the transferred share is then equal to the share's value. Under paragraph (b)(2)(ii)(B) of this section, the positive investment adjustment removed from the transferred loss share is reallocated and applied to increase M's bases in its S common shares in a manner that reduces disparity in M's bases in all the S common shares, to the greatest extent possible. Accordingly, the $4 positive investment adjustment removed from the Block 1 share is reallocated and applied to the basis of the Block 2 share, increasing it from $4 to $8.

(C) *Application of paragraphs (c) and (d) of this section.* Because M's sale of the Block 1 share is not a transfer of a loss share after the application of this paragraph (b), neither paragraph (c) of this section nor paragraph (d) of this section applies to the transfer.

(ii) *Redetermination to eliminate duplicated loss.* (A) *Facts.* The facts are the same as in paragraph (i)(A) of this *Example 1*, except that, at the time of the second contribution, the value of Asset 1 had declined to $20 and so, instead of contributing Asset 2, M contributed Asset 3 to S in exchange for the Block 2 share. At the time of that exchange, Asset 3 had a basis and value of $5. On October 1, year 3, S sells Asset 1 for $20, recognizing a $60 loss that is absorbed by the group. On December 31, year 3, M sells one of its Block 1 shares to X for $5. After taking into account the effects of all applicable rules of law, M's basis in each Block 1 share is $8 (M's original $20 basis decreased under § 1.1502–32 by $12 (the share's allocable portion of the $60 loss recognized on the sale of Asset 1)). M's basis in its Block 2 share is an excess loss account of $7 (M's original basis of $5 reduced under § 1.1502–32 by $12, the share's allocable portion of the loss recognized on the sale of Asset 1). M's sale of the Block 1 share is a transfer of a loss share and therefore subject to this section.

(B) *Basis redetermination under this paragraph (b).* Under this paragraph (b), M's bases in all its shares of S stock are subject to redetermination. There are no positive investment adjustments and so there is no adjustment under paragraph (b)(2)(i)(A) of this section. However, under paragraph (b)(2)(i)(B) of this section, M's basis in the transferred Block 1 share is reduced, but not below value, by reallocating negative investment adjustments from common shares that are not transferred loss shares. In total, there were $48 of negative investment adjustments applied to common shares that are not transferred loss shares. Accordingly, M's basis in the Block 1 share is reduced by $3, from $8 to its value of $5. Under paragraph (b)(2)(i)(B) of this section, the negative investment adjustments applied to the transferred share are reallocated from (and therefore cause an increase in the basis of) S common shares that are not transferred loss shares in a manner that reduces disparity among members' bases in all S common shares to the greatest extent possible. Accordingly, the $3 negative investment adjustment reallocated and applied to the transferred Block 1 share is reallocated entirely from the Block 2 share, increasing the basis in the Block 2 share from an excess loss account of $7 to an excess loss account of $4.

(C) *Application of paragraphs (c) and (d) of this section.* Because M's sale of the Block

1 share is not a transfer of a loss share after the application of this paragraph (b), neither paragraph (c) of this section nor paragraph (d) of this section applies to the transfer.

(iii) *Nonapplicability of redetermination rule to sale of entire interest.* The facts are the same as in paragraph (ii)(A) of this *Example 1*, except that, on December 31, year 3, M sells all its shares of S stock to X for $25. M's sale of the S stock to X is a transfer of all of the shares of S stock held by members to one or more nonmembers in one fully taxable transaction and, therefore, basis is not redetermined under this paragraph (b). Accordingly, the sale of the Block 1 shares remains a transfer of loss shares and, as such, subject to paragraphs (c) and (d) of this section. However, paragraphs (c)(7) and (d)(3)(i)(A) of this section apply netting principles to prevent adjustments under either paragraph (c) or paragraph (d) of this section, respectively. Alternatively, the group could elect to apply this paragraph (b). In that case, the $12 negative adjustment applied to the Block 2 shares would be reallocated to the Block 1 shares with the result that there would be no loss (or gain) on any of the transferred shares following the application of this paragraph (b). In that case, there would be no further application of this section to the transfer.

(iv) *Transfer of entire interest, partially taxable.* The facts are the same as in paragraph (iii) of this *Example 1*, except that, instead of selling the Block 2 share to X, M contributes the share to a nonmember in a section 351 exchange that is part of the same transaction. Although all the S shares held by members are transferred in the transaction, not all the shares are transferred to one or more nonmembers in one fully taxable transaction. Therefore, paragraph (b)(1)(ii)(B) of this section does not apply and M must redetermine its bases in its shares of S stock under this paragraph (b). In total, there were $12 of negative investment adjustments applied to common shares that are not transferred loss shares (the Block 2 share, a gain share). Accordingly, M's basis in each of the Block 1 shares is reduced by $3, from $8 to its value of $5. Under paragraph (b)(2)(i)(B) of this section, the negative investment adjustments applied to the transferred shares are reallocated from (and therefore cause an increase in the basis of) S shares that are not transferred loss shares in a manner that reduces disparity among members' bases in all S common shares to the greatest extent possible. Accordingly, the $12 negative investment adjustment reallocated and applied to the transferred Block 1 shares is reallocated entirely from the Block 2 share, increasing the basis in the Block 2 share from an excess loss account of $7 to a basis of $5. Because M's transfer is not a transfer of loss shares after the application of this paragraph (b), neither paragraph (c) of this section nor paragraph (d) of this section applies to the transfer.

*Example 2. Redetermination increases basis of transferred loss share.* (i) *Facts.* On January 1, year 1, M owns all 10 outstanding shares of S common stock. Five of the shares have a basis of $20 per share (Block 1 shares) and five of the shares have a basis of $10 per share (Block 2 shares). S's only asset, Asset 1, has a basis of $50. S has no other attributes. On October 1, year 1, S sells Asset 1 for $100, recognizing a $50 gain. On December 31, year 2, M sells one Block 1 share and one Block 2 share to X for $10 per share. After taking into account the effects of all applicable rules of law, M's basis in each Block 1 share is $25 (M's original $20 basis increased under § 1.1502–32 by $5, the share's allocable portion of the $50 gain recognized on the sale of Asset 1), and M's basis in each Block 2 share is $15 (M's original $10 basis increased under § 1.1502–32 by $5, the share's allocable portion of the $50 gain recognized on the sale of Asset 1). M's sale of the Block 1 and Block 2 shares is a transfer of loss shares and therefore subject to this section.

(ii) *Basis redetermination under this paragraph (b).* Under this paragraph (b), M's bases in all its shares of S stock are subject to redetermination. First, paragraph (b)(2)(i)(A) of this section applies to reduce M's basis in the transferred Block 1 and Block 2 shares, but not below value, by removing the positive investment adjustments applied to the bases of the transferred loss shares. Accordingly, the basis of the transferred Block 1 share is reduced by $5, from $25 to $20. The basis of the transferred Block 2 share is also reduced by $5, from $15 to $10. (Although the transferred Block 1 share is still a loss share, there is no reduction to its basis under paragraph (b)(2)(i)(B) of this section because there were no negative investment adjustments applied to the bases of the S common shares that are not transferred loss shares.) Next, paragraph (b)(2)(ii)(B) of this section applies to reallocate and apply the $10 of positive investment adjustments removed from the transferred loss shares to increase M's bases in its S common shares in a manner that reduces the disparity in its bases in all S common shares to the greatest extent possible. Accordingly, of the $10 of positive investment adjustments to be reallocated, $6 is reallocated and applied to the basis of the transferred Block 2 share (increasing it from $10 to $16) and $4 is reallocated and applied equally to the basis of each of the four retained Block 2 shares (increasing the basis of each from $15 to $16). After giving effect to the reallocations under this paragraph (b), M's basis in each retained Block 1 share is $25, M's basis in the transferred Block 1 share is $20, and M's basis in each Block 2 share is $16.

(iii) *Application of paragraph (c) of this section.* After the application of this paragraph (b), M's sale of the Block 1 and Block 2 shares is still a transfer of loss shares and, accordingly, subject to paragraph (c) of this section. No adjustment is required to the basis of the transferred Block 1 share under paragraph (c) of this section because, after its basis is redetermined under this paragraph (b), the net positive adjustment to the basis of the share is $0. See paragraph (c)(3) of this section. However, under paragraph (c) of this section M's basis in the transferred Block 2 share is reduced by $6 (the lesser of its net positive adjustment, $6, and its disconformity amount, $6), from $16 to $10, its value. See paragraph (c)(2) of this section.

(iv) *Application of paragraph (d) of this section.* After the application of paragraph (c) of this section, M's sale of the Block 1 share is still a transfer of a loss share and, accordingly, subject to paragraph (d) of this section. No adjustment is required under paragraph (d) of this section because there is no aggregate inside loss. See paragraph (d)(3)(iii) of this section. Because M's sale of the Block 2 share is no longer a transfer of a loss share after the application of paragraph (c) of this section, paragraph (d) of this section does not apply to the transfer of the Block 2 share.

*Example 3. Tiered subsidiaries.* (i) *Transfer of all shares of common stock.* (A) *Facts.* P owns the sole outstanding share of S stock with a basis of $100, and the sole outstanding share of M stock with a basis of $300. M has $200 and owns an asset with a basis of $0. S owns one asset, Asset 1, with a basis of $100. At a time when Asset 1 has a value of $200, S issues a second share of common stock to M in exchange for $200. Later S sells Asset 1 for $200, recognizing a $100 gain. After taking into account the effects of all applicable rules of law, P's basis in its S stock is $150 (P's original $100 basis increased under § 1.1502–32 by $50, the share's allocable portion of the $100 gain recognized on the sale of Asset 1), M's basis in its S stock is $250 (M's original $200 basis increased under § 1.1502–32 by $50, the share's allocable portion of the $100 gain recognized on the sale of Asset 1), and P's basis in its M stock is $350 (P's original $300 basis increased under § 1.1502–32 by $50, the tier-up of M's increase in its basis in its S stock). P then sells its M share and its S share to X for $300 and $200, respectively. M and S are not members of the same consolidated group immediately after the sale. Therefore, the M share and both of the S shares are transferred in the transaction. Regarding P's sale of its share of S stock and its share of M stock, see paragraph (f)(10)(i)(A) of this section (ceasing to own a share in a taxable transaction) and paragraph (f)(10)(i)(C) of this section (nonmember acquires share); regarding M's share of S stock, see paragraph (f)(10)(i)(B) of this section (ceasing to be members of the same group). The application of this section begins with respect to the stock of S, the subsidiary at the lowest tier in which there is a transfer of subsidiary stock. See paragraph (a)(3)(ii) of this section. Although both P and M transfer their S shares, only M's S share is a loss share. Thus, only M's transfer is a transfer of a loss share of S stock and only M's transfer is subject to this section.

(B) *Application of section to transferred S shares.* Although only M's transfer is subject to this section, all members' bases in their shares of S stock are subject to redetermination under this paragraph (b). First, paragraph (b)(2)(i)(A) of this section applies to reduce M's basis in its transferred S share, but not below value, by removing the positive investment adjustment applied to that share. Accordingly, the basis of M's S share is reduced by $50, from $250 to $200 (under § 1.1502–32, that redetermination adjustment tiers up to reduce P's basis in its M stock by $50, from $350 to $300). Because there are no negative adjustments to reallocate under paragraph (b)(2)(i)(B) of this section, paragraph (b)(2)(ii)(B) of this section

then applies to reallocate and apply the $50 positive investment adjustment removed from the transferred loss S share to increase P's basis in its S share in a manner that reduces disparity among members' bases in all S common shares to the greatest extent possible. Accordingly, all $50 of the positive investment adjustment is reallocated and applied to P's basis in its S share (increasing the basis from $150 to $200). Because M's transfer of its S share is not a transfer of a loss share after the application of this paragraph (b), neither paragraph (c) of this section nor paragraph (d) of this section applies to that transfer.

(C) *Application of section to transfers at next higher tier.* After the adjustments to M's share of S stock are given effect, P's transfer of its share of M stock is not a transfer of a loss share and so this section does not apply to that transfer.

(D) *Result of application of section.* After the application of this section, P recognizes no gain or loss on its sale of either the S share or the M share. In addition, the unrecognized (noneconomic) loss in M's basis in its S share is eliminated. The results would be the same if, in addition to the facts in paragraph (i)(A) of this *Example 3*, M transferred its S share to a X in a fully taxable transaction and, as permitted under paragraph (b)(1)(ii)(B) of this section, P elected to redetermine basis under this paragraph (b).

(ii) *Transfer of less than all lower-tier shares of stock.* (A) *Facts.* The facts are the same as in paragraph (i)(A) of this *Example 1*, except that M and S are members of the same consolidated group immediately after the sale. Therefore, in this case, M's S share is not transferred and so this section has no application with respect to M's S share. P's transfer of its S share is not a transfer of a loss share and so is also not subject to this section. However, P's sale of its share of M stock is a transfer of a loss share and is subject to this section.

(B) *Basis redetermination under this paragraph (b).* Although P's transfer of its share of M stock is subject to this section, this paragraph (b) does not apply to the transfer because there is only one share of M stock outstanding (and so there can be no disparity among members' bases in common shares and there are no outstanding preferred shares with respect to which there can be unrecognized gain or loss). Accordingly, after the application of this paragraph (b), P's sale of its M share is still a transfer of a loss share and therefore subject to paragraph (c) of this section.

(C) *Application of paragraphs (c) and (d) of this section.* Under paragraph (c) of this section, P must reduce its basis in its M share by $50, the lesser of its net positive adjustment ($50, see paragraph (c)(3) of this section) and its disconformity amount ($150, see paragraphs (c)(4), (c)(5), and (c)(6) of this section). As a result, the share is no longer a loss share and the transfer is not subject to paragraph (d) of this section.

(D) *Result of application of section.* After the application of this section, P recognizes a $50 gain on its sale of the S share and no loss on its sale of the M share. Although there is unrecognized loss preserved in M's basis in its S share, if M later transfers the share when it is a loss share, that transfer will be subject to this section.

*Example 4. Application to outstanding common and preferred shares.* (i) *Facts.* P owns all the stock of M and all eight outstanding shares of S common stock. S also has two shares of nonvoting preferred stock outstanding; the preferred shares each have a $100 annual, cumulative preference as to dividends. M owns one of the preferred shares (PS1) and P owns the other (PS2). On January 1, year 1, the bases and values of the outstanding S shares are:

| | Preferred | | Common | | | | | | | |
|---|---|---|---|---|---|---|---|---|---|---|
| | PS1 (M) | PS2 (P) | CS1 (P) | CS2 (P) | CS3 (P) | CS4 (P) | CS5 (P) | CS6 (P) | CS7 (P) | CS8 (P) |
| Basis | 1250 | 990 | 1025 | 710 | 550 | 400 | 375 | 250 | 215 | 100 |
| Value | 1000 | 1000 | 375 | 375 | 375 | 375 | 375 | 375 | 375 | 375 |

(A) As of January 1, year 1, there are no arrearages on the preferred stock. In year 1, S has a $1100 capital loss and $100 of ordinary income. The group absorbs the loss and the negative remaining adjustment of $1000 is allocable entirely to the common stock, equally to each common share ($125 per share). See § 1.1502–32(c)(1)(iii) and (c)(2).

(B) In year 2, S has $700 of ordinary income and a $100 ordinary loss. Also, on October 1, year 2, S declares and makes a $200 dividend distribution with respect to the preferred stock ($100 per share). Under § 1.1502–32(c)(1)(i), a negative adjustment of $100 is first allocated to each of the preferred shares to reflect the declaration of the dividend. The $600 positive remaining adjustment determined under § 1.1502–32(c)(1)(iii) (reflecting S's net income reduced by the distribution) is then allocated to each of the preferred shares to the extent of its entitlement to dividends accruing in year 1 and year 2 ($200 per share). See § 1.1502–32(c)(1)(iii) and (c)(3). The $200 of the positive remaining adjustment not allocated to the preferred shares is then allocated to the common stock, equally to each common share ($25 per share). See § 1.1502–32(c)(1)(iii) and (c)(2). After taking into account the effects of all applicable rules of law, the adjusted bases and the values of the shares as of January 1, year 3, are:

| | Preferred | | Common | | | | | | | |
|---|---|---|---|---|---|---|---|---|---|---|
| | PS1 (M) | PS2 (P) | CS1 (P) | CS2 (P) | CS3 (P) | CS4 (P) | CS5 (P) | CS6 (P) | CS7 (P) | CS8 (P) |
| Basis | 1250 | 990 | 1025 | 710 | 550 | 400 | 375 | 250 | 215 | 100 |
| Year 1§ 1.1502–32 adjustments | N/A | N/A | −125 | −125 | −125 | −125 | −125 | −125 | −125 | −125 |
| Year 2§ 1.1502–32 adjustments | −100 | −100 | +25 | +25 | +25 | +25 | +25 | +25 | +25 | +25 |
| | +200 | +200 | | | | | | | | |
| | +100 | +100 | | | | | | | | |
| Adjusted basis | 1350 | 1090 | 925 | 610 | 450 | 300 | 275 | 150 | 115 | 0 |
| Value | 1100 | 1100 | 275 | 275 | 275 | 275 | 275 | 275 | 275 | 275 |
| Unrecognized gain/(loss) | (250) | 10 | (650) | (335) | (175) | (25) | 0 | 125 | 160 | 275 |

(C) On January 1, year 3, M sells PS1 for $1100 and P sells CS2 for $275. The sales of PS1 and CS2 are transfers of loss shares and therefore subject to this section.

(ii) *Basis redetermination under this paragraph (b).* Under this paragraph (b), all members' bases in shares of S stock are subject to redetermination in accordance with the following:

(A) *Removing positive investment adjustments from transferred loss common shares.* First, paragraph (b)(2)(i)(A) of this section applies to reduce P's basis in CS2, but not below value, by removing the positive investment adjustment applied to the basis of the share. Accordingly, P's basis in CS2 is reduced by $25, from $610 to $585.

(B) *Reallocating negative investment adjustments from common shares that are not transferred loss shares.* Because the transferred shares remain loss shares after the removal of positive investment adjustments, their bases are further reduced under paragraph (b)(2)(i)(B) of this section, but not below value, by reallocating negative investment adjustments applied to common shares that are not transferred loss shares. Reallocations are made first to preferred shares and then to the common shares, in a manner that reduces disparity among members' bases in transferred loss preferred shares, and reduces disparity among members' bases in all common shares, to the greatest extent possible. The loss on PS1 is $250, the remaining loss on CS2 is $310, and the total amount of negative investment adjustments applied to shares that are not transferred loss shares is $875 (the sum of the negative adjustments applied to all common shares other than CS2). Thus, $250 of negative investment adjustments are reallocated and applied to the basis of PS1, reducing it to the share's value, $1100. The negative investment adjustments are reallocated from the common shares that are not transferred loss shares in a manner that reduces disparity among members' bases in all common shares to the greatest extent possible. The negative investment adjustments may be reallocated to PS1 from the common shares that are not transferred loss shares as follows: $125 from each of CS7 and CS8. Such reallocations increase the basis of CS7 by $125, from $115 to $240, and increase the basis of CS8 by $125, from $0 to $125. Negative investment adjustments are then reallocated to CS2 from the common shares that are not transferred loss shares in a manner that reduces disparity among members' bases in all common shares to the greatest extent possible. The negative investment adjustments may be reallocated to CS2 from the other common shares as follows: $80 from CS4, $105 from CS5, and $125 from CS6. Such reallocations reduce the basis of CS2 by $310, from $585 to $275, increase the basis of CS4 by $80, from $300 to $380, increase the basis of CS5 by $105, from $275 to $380, and increase the basis of CS6 by $125, from $150 to $275. However, there may be other reasonable reallocations.

(C) *Increasing basis by reallocated positive investment adjustments.* Under paragraph (b)(2)(ii)(A) of this section, the $25 positive investment adjustment removed from CS2 (the transferred loss common share) is then reallocated and applied to increase the basis of preferred shares, but not above value. Accordingly, $10 of that amount is reallocated to PS2, increasing its basis from $1090 to $1100, its value. Under paragraph (b)(2)(ii)(B) of this section, the remaining $15 is reallocated and applied to the common shares in a manner that reduces disparity among members' bases in all common shares to the greatest extent possible. The $15 positive investment adjustment that is reallocated to common shares may be reallocated entirely to CS8, increasing its basis from $125 to $140. However, there may be other reasonable reallocations.

(D) *Summary of the reallocation of adjustments.* The adjustments made under this paragraph (b) are:

| | Preferred | | Common | | | | | | | |
|---|---|---|---|---|---|---|---|---|---|---|
| | PS1 (M) | PS2 (P) | CS1 (P) | CS2 (P) | CS3 (P) | CS4 (P) | CS5 (P) | CS6 (P) | CS7 (P) | CS8 (P) |
| Adjusted basis before redetermination | 1350 | 1090 | 925 | 610 | 450 | 300 | 275 | 150 | 115 | 0 |
| Removing positive adjustments from transferred loss shares | ..... | ..... | ..... | −25 | | | | | | |
| Reallocating negative adjustments | −250 | ..... | ..... | −310 | ..... | +80 | +105 | +125 | +125 | +125 |
| Applying positive adjustments removed from transferred loss shares | ..... | +10 | ..... | ..... | ..... | ..... | ..... | ..... | ..... | +15 |
| Basis after redetermination | 1100 | 1100 | 925 | 275 | 450 | 380 | 380 | 275 | 240 | 140 |
| Value | 1100 | 1100 | 275 | 275 | 275 | 275 | 275 | 275 | 275 | 275 |
| Gain/(loss) | 0 | 0 | (650) | 0 | (175) | (105) | (105) | 0 | 35 | 135 |

(iii) *Application of paragraphs (c) and (d) of this section.* Because M's sale of PS1 and P's sale of CS2 are not transfers of loss shares after the application of this paragraph (b), paragraphs (c) and (d) of this section do not apply.

(iv) *Higher-tier effects.* The $250 reduction in the basis of PS1 under this paragraph (b) is a noncapital, nondeductible expense under § 1.1502–32(b)(3)(iii)(B) that will be included in the year 3 investment adjustment to be applied to P's basis in its M stock.

(c) *Stock basis reduction to prevent noneconomic loss*—(1) *In general.* The rules of this paragraph (c) reduce M's basis in a transferred share of S stock to prevent noneconomic stock loss and thus promote the clear reflection of the group's income. These rules limit the reduction to M's basis in the S share to the amount of net unrealized appreciation reflected in the share's basis as of the transfer (the disconformity amount). These rules also limit the reduction to M's basis in the S share to the portion of the share's basis that is attributable to investment adjustments made pursuant to the consolidated return regulations.

(2) *Basis reduction rule.* This paragraph (c) applies if M transfers a share of S stock and, after taking into account the effects of all applicable rules of law, including any adjustments under paragraph (b) of this section, the share is a loss share. Under this paragraph (c), M's basis in the share is reduced, but not below value, by the lesser of—

(i) The share's net positive adjustment (as defined in paragraph (c)(3) of this section); and

(ii) The share's disconformity amount (as defined in paragraph (c)(4) of this section).

(3) *Net positive adjustment.* A share's *net positive adjustment* is the greater of—

(i) Zero; and

(ii) The sum of all investment adjustments reflected in the basis of the share. The term *investment adjustment* has the same meaning as in paragraph (b)(1)(iii) of this section, except that it includes all adjustments specially allocated under § 1.1502–32(c)(1)(ii).

(4) *Disconformity amount.* A share's *disconformity amount* is the excess, if any, of—

(i) M's basis in the share; over

(ii) The share's allocable portion of S's net inside attribute amount (as defined in paragraph (c)(5) of this section).

(5) *Net inside attribute amount.* S's *net inside attribute amount* is determined as of the transfer, taking into account all applicable rules of law (even if the adjustments required by such rules are not deemed effective until after the transfer, such as certain adjustments required under sections 108 and 1017 and § 1.1502–28). S's net inside attribute amount is the sum of S's net operating and capital loss carryovers, deferred deductions, money, and basis in assets other than money, reduced by the amount of S's liabilities. For this purpose, S's basis in any share of lower-tier subsidiary stock is generally S's basis in that share, adjusted to reflect any gain or loss recognized in the

transaction with respect to the share and any other related or resulting adjustments to the basis of the share. However, see paragraph (c)(6) of this section for special rules regarding the computation of S's net inside attribute amount for purposes of this paragraph (c) if S holds stock of a subsidiary that is not transferred in the transaction. See paragraph (f) of this section for definitions of ''allocable portion,'' ''deferred deduction,'' ''liability,'' ''loss carryover,'' and other relevant terms.

(6) *Determination of S's net inside attribute amount if S owns stock of a lower-tier subsidiary*—(i) *Overview.* If a loss share of S stock is transferred when S holds a share of stock of another subsidiary (S1) and the S1 share is not transferred in the same transaction, S's net inside attribute amount is determined by treating S's basis in its S1 share as tentatively reduced under this paragraph (c)(6). The purpose of this rule is to reduce the extent to which S1's investment adjustments increase noneconomic loss on S stock (as a result of S1's recognition of items that are indirectly reflected in a member's basis in a share of S stock).

(ii) *General rule for nontransferred shares of lower-tier subsidiary stock.* For purposes of determining the disconformity amount of a share of S stock, S's basis in a nontransferred share of S1 stock is treated as reduced by the share's tentative reduction amount. The tentative reduction amount is the lesser of the S1 share's net positive adjustment and the S1 share's disconformity amount.

(iii) *Multiple tiers of nontransferred shares.* If S directly or indirectly owns nontransferred shares of stock of subsidiaries in multiple tiers, then, subject to the limitations in paragraph (c)(6)(iv) of this section (regarding nontransferred shares that are lower-tier to transferred shares), the rules of this paragraph (c)(6) first apply to determine the tentatively reduced basis of stock of the subsidiary at the lowest tier. These rules then apply to determine the tentatively reduced basis of nontransferred shares of stock of subsidiaries successively at each next higher tier that is lower-tier to S. The tentative reductions at each tier are treated as noncapital, nondeductible expenses that tier up under the principles of § 1.1502–32, and, as such, result in a tentative reduction of basis and any net positive adjustment of subsidiary shares that are lower-tier to S.

(iv) *Nonapplicability of tentative basis reduction rule to transferred shares.* The tentative basis reduction rule in this paragraph (c)(6) does not apply to any share of stock of a lower-tier subsidiary (S1) that is transferred in the same transaction in which the S share is transferred. Further, for purposes of determining the S share's disconformity amount, the tentative basis reduction rule in this paragraph (c)(6) only applies with respect to stock of a lower-tier subsidiary if such stock is lower-tier to a nontransferred S1 share. The purpose of this rule is to prevent tentative adjustments to the bases of lower-tier shares if this paragraph (c) has already applied with respect to the shares, without regard to whether such application resulted in the reduction of the basis of any share.

(v) *Example.* The rules of this paragraph (c)(6) are illustrated by the following example:

*Example.* (i) *Facts.* M owns the sole outstanding share of S stock, S owns the sole outstanding share of S1 stock, S1 owns all five outstanding shares of S2 stock (the bases of which are equal), and S2 owns the sole outstanding share of S3 stock. The basis of each of the shares reflects its allocable portion of a $5 positive investment adjustment attributable to income recognized by S3. The basis of the S share exceeds its value by $10 and the basis of the S1 share exceeds its value by $5. The basis of each S2 share is $1 less than its value. In one transaction, M sells its S share to X, S1 issues new shares in an amount that prevents S and S1 from being members of the same group, and S1 sells one of its S2 shares to an unrelated individual. S1, S2, and S3 elect to file a consolidated return following the transaction.

(ii) *General applicability of section.* As a result of the transaction, there is a transfer of the S share and the S2 share that was sold (because both shares were sold to nonmembers) and of the S1 share (because S and S1 cease to be members of the same group as a result of the stock issuance). The transfer of the S2 share is not a transfer of a loss share, and so this section does not apply to that transfer. The transfers of the S and S1 shares are transfers of loss shares, and so this section applies to those transfers. The S3 share and the four retained S2 shares are not transferred in the transaction. Under paragraph (a)(3)(ii)(A) of this section, this section applies first to the transfer of the S1 share because it is the lowest-tier transferred loss share.

(iii) *Application of paragraph (b) of this section and this paragraph (c) to transfer of S1 stock.* First, the $1 gain recognized on the transfer of the S2 share tiers up to adjust the basis of each upper-tier share. The transferred S1 share is still a loss share (by $4) and is therefore subject to this section. Although the transfer is subject to paragraph (b) of this section, there is no basis redetermination under paragraph (b) of this section because there is only one share of S1 stock outstanding (and so there can be no disparity among members' bases in common shares and there are no outstanding preferred shares with respect to which there can be unrecognized gain or loss). See paragraph (b)(1)(ii)(A) of this section. Therefore, after the application of paragraph (b) of this section, the S1 share is still a loss share and, as such, subject to this paragraph (c). In determining the amount of any basis reduction under this paragraph (c), the disconformity amount of the S1 share is computed by comparing S's basis in its S1 share to S1's net inside attribute amount (because there is only one S1 share outstanding, the entire amount is allocable to that share). In determining S1's net inside attribute amount, the tentative reduction rule in this paragraph (c)(6) applies to nontransferred lower-tier shares (provided they are lower-tier to nontransferred shares). Thus, the rule applies to S1's four retained shares of S2 stock and to S2's share of S3 stock. The tentative reduction begins at the lowest level (S2's share of S3 stock) and any tentative reduction amount tiers up as a noncapital, nondeductible expense under the principles of § 1.1502–32, tentatively reducing the bases of any upper tier nontransferred shares that are lower-tier to the transferred loss share (the S1 share). Accordingly, each of S1's nontransferred share of S2 stock is tentatively reduced by its portion of the tentative reduction to S2's share of S3 stock. S1 then applies the tentative reduction rule to its four nontransferred S2 shares. S1's net inside attribute amount is the sum of its basis in each of its nontransferred S2 shares, as tentatively reduced under this paragraph (c)(6) and S1's actual basis in the transferred S2 share, increased to reflect the gain recognized on the sale of that share. After the application of this paragraph (c) to the transfer of the S1 share, paragraph (b) of this section applies to M's transfer of the S share.

(iv) *Application of section to transfer of S stock.* Because the S share is still a loss share after applying paragraph (b) of this section and this paragraph (c) to the transfer of the S1 stock, this section applies to M's transfer of the S share. Although paragraph (b) of this section applies to the transfer, there is no basis redetermination under paragraph (b) of this section because there is only one share of S stock outstanding (and so there can be no disparity among members' bases in common shares and there are no outstanding preferred shares with respect to which there can be unrecognized gain or loss). See paragraph (b)(1)(ii)(A) of this section. Therefore, after the application of paragraph (b) of this section, the share is still a loss share and, as such, subject to this paragraph (c). In determining the disconformity amount of the S share, S's net inside attribute amount is determined using S's actual basis in the transferred S1 stock (after any reduction under this paragraph (c)), because the tentative reduction rule in this paragraph (c)(6) does not apply to shares that are transferred in the transaction. All other shares are lower-tier to the transferred S1 share and are therefore also not subject to tentative reduction for purposes of determining the disconformity amount of the S share. After the application of this paragraph (c) to the transfer of the S share, paragraph (d) of this section applies with respect to M's transfer of the S share. After the application of paragraph (d) of this

section with respect to the transfer of the S share, if the S1 share is still a loss share, paragraph (d) of this section applies with respect to S's transfer of the S1 share.

(7) *Netting of gains and losses taken into account*—(i) *General rule.* Solely for purposes of computing the basis reduction required under this paragraph (c), the basis of each transferred loss share of S stock is treated as reduced proportionately (as to loss) by the amount of income or gain taken into account by members with respect to transferred shares of S stock, provided that—

(A) The shares are transferred in one transaction; and

(B) The gain is taken into account as of the transaction.

(ii) *Example.* The netting rule of this paragraph (c)(7) is illustrated by the following example:

*Example. Disposition of gain and loss shares.* (i) *Facts.* M owns the only three outstanding shares of S stock. Share A has a basis of $54, Share B has a basis of $100, and Share C has a basis of $80. In the same transaction, M sells all three S shares to X for $60 each. M realizes a gain of $6 on Share A, a loss of $40 on Share B, and a loss of $20 on Share C. M's sales of Share B and Share C are transfers of loss shares and therefore subject to this section. M's sale is a transfer of all of the shares of S stock held by members to one or more nonmembers in one fully taxable transaction and, therefore, basis is not redetermined under paragraph (b) of this section. See paragraph (b)(1)(ii)(B) of this section. The transfer is then subject to this paragraph (c). However, for this purpose, M treats its bases in Share B and Share C as reduced by the $6 gain taken into account on Share A. The gain is allocated to Share B and Share C proportionately based on the amount of loss in each share. Thus, $4 of gain ($40/$60 x $6) is treated as allocated to Share B and $2 of gain ($20/$60 x $6) is treated as allocated to Share C. Accordingly, M computes the basis reduction required under this paragraph (c) by treating its basis in Share B as $96 ($100 less $4) and its basis in Share C as $78 ($80 less $2). If, after the application of this paragraph (c), the sales of Share B and Share C are still transfers of loss shares, then the transfers are subject to paragraph (d) of this section. (Although the bases of Share B and Share C are not actually reduced by any portion of the gain, paragraph (d)(3)(i)(A) of this section applies netting principles to limit adjustments under paragraph (d) of this section.)

(ii) *Disposition of stock with deferred gain.* The facts are the same as in paragraph (i) of this *Example,* except that M sells the gain share to another member. Under § 1.1502–13, M's gain recognized on Share A is not taken into account in the taxable year of the transfer and therefore cannot be treated as reducing M's loss recognized on Share B and Share C for purposes of this paragraph (c). The applicability of this section to the transfer of Share A is determined as of the time that the intercompany item (the gain on M's sale to the other member) is taken into account; see paragraph (e)(3) of this section. However, if Share B (instead of Share A) were sold to a member, the entire gain on Share A would be treated as reducing the loss on Share C for purposes of applying this paragraph (c); see paragraph (e)(3) of this section.

(8) *Examples.* The application of this paragraph (c) is illustrated by the following examples.

*Example 1. Appreciation reflected in stock basis at acquisition.* (i) *Appreciation recognized as gain.* (A) *Facts.* On January 1, year 1, M purchases the sole outstanding share of S stock for $100. At that time, S owns two assets, Asset 1 with a basis of $0 and a value of $40, and Asset 2 with a basis and value of $60. In year 1, S sells Asset 1 for $40, recognizing a $40 gain. On December 31, year 1, M sells its S share for $100. After taking into account the effects of all applicable rules of law, M's basis in the S share is $140 (M's original $100 basis increased under § 1.1502–32 by $40, the share's allocable portion of the gain recognized on the sale of Asset 1). M's sale of the S share is a transfer of a loss share and therefore subject to this section.

(B) *Application of paragraph (b) of this section.* Although the transfer is subject to this section, there is no basis redetermination under paragraph (b) of this section because there is only one share of S stock outstanding (and so there can be no disparity among members' bases in common shares and there are no outstanding preferred shares with respect to which there can be unrecognized gain or loss). See paragraph (b)(1)(ii)(A) of this section. Therefore, after the application of paragraph (b) of this section, the share is still a loss share and, as such, subject to this paragraph (c).

(C) *Basis reduction under this paragraph (c).* Under this paragraph (c), M's basis in the S share, $140, is reduced, but not below value, $100, by the lesser of the share's net positive adjustment and disconformity amount. The share's net positive adjustment is the greater of zero and the sum of all investment adjustments (as defined in paragraph (b)(1)(iii) of this section) applied to the basis of the share. The only investment adjustment applied to the basis of the share is the $40 adjustment attributable to the gain recognized on the sale of Asset 1. Thus, the share's net positive adjustment is $40. The share's disconformity amount is the excess, if any, of its basis, $140, over its allocable portion of S's net inside attribute amount. S's net inside attribute amount is the sum of S's money ($40 from the sale of Asset 1) and S's basis in Asset 2, $60, or $100. The share is the only outstanding S share and so its allocable portion of the $100 net inside attribute amount is the entire $100. Thus, the share's disconformity amount is $40, the excess of $140 over $100. The lesser of the net positive adjustment, $40, and the share's disconformity amount, $40, is $40. Accordingly, immediately before the application of paragraph (d) of this section, M's basis in the share is reduced by $40, from $140 to $100.

(D) *Application of paragraph (d) of this section.* Because M's sale of the S share is not a transfer of a loss share after the application of this paragraph (c), paragraph (d) of this section does not apply to the transfer.

(ii) *Appreciation recognized as income earned in the consumption of built-in gain.* The facts are the same as in paragraph (i)(A) of this *Example 1,* except that, instead of selling Asset 1, the value of Asset 1 is consumed in the production of $40 of income in year 1 (reducing the value of Asset 1 to $0). Because the net positive adjustment includes items of income as well as items of gain, the results are the same as those described in paragraph (i) of this *Example 1.*

(iii) *Post-acquisition appreciation eliminates stock loss.* The facts are the same as in paragraph (i)(A) of this *Example 1* except that, in addition, the value of Asset 2 increases to $100 before the stock is sold. As a result, M sells the S share for $140. Because M's sale of the S share is not a transfer of a loss share, this section does not apply to the transfer, notwithstanding that P's basis in the S share was increased by the gain recognized on Asset 1.

(iv) *Distributions.* (A) *Facts.* The facts are the same as in paragraph (i)(A) of this *Example 1* except that, in addition, S declares and makes a $10 dividend distribution before the end of year 1. As a result, the value of the share decreases and M sells the share for $90. After taking into account the effects of all applicable rules of law, M's basis in the S share is $130 (M's original $100 basis increased under § 1.1502–32 by $30, the $10 distribution on the share reduced by the share's allocable portion of the $40 gain recognized on the sale of Asset 1). M's sale of the S share is a transfer of a loss share and therefore subject to this section.

(B) *Application of paragraph (b) of this section.* Although the transfer is subject to this section, there is no basis redetermination under paragraph (b) of this section for the reasons set forth in paragraph (i)(B) of this *Example 1.* Therefore, after the application of paragraph (b) of this section, the share is still a loss share and, as such, subject to this paragraph (c).

(C) *Basis reduction under this paragraph (c).* Under this paragraph (c), M's basis in the S share, $130, is reduced, but not below value, $90, by the lesser of the share's net positive adjustment and disconformity amount. The share's net positive adjustment is $40 (the sum of all investment adjustments (as defined in paragraph (b)(1)(iii) of this section) applied to the basis of the share). The share's disconformity amount is the excess of its basis, $130, over its allocable portion of S's net inside attribute amount. S's net inside attribute amount is $90, the sum of S's money ($30, the $40 sale proceeds less the $10 distribution) and S's basis in Asset 2, $60. The share is the only outstanding S share and so its allocable portion of the $90 net inside attribute amount is the entire $90. The lesser of the share's net positive adjustment, $40, and its disconformity amount, $40, is $40. Accordingly, immediately before the application of paragraph (d) of this section, the basis in the share is reduced by $40, from $130 to $90.

(D) *Application of paragraph (d) of this section.* Because M's sale of the S share is not

a transfer of a loss share after the application of this paragraph (c), paragraph (d) of this section does not apply to the transfer.

*Example 2. Loss of appreciation reflected in basis.* (i) *Facts.* On January 1, year 1, M purchases the sole outstanding share of S stock for $100. At that time, S owns two assets, Asset 1 with a basis of $0 and a value of $40, and Asset 2 with a basis and value of $60. The value of Asset 1 declines to $0 and M sells its S share for $60. After taking into account the effects of all applicable rules of law, M's basis in the S share is $100. M's sale of the S share is a transfer of a loss share and therefore subject to this section.

(ii) *Application of paragraph (b) of this section.* Although the transfer is subject to this section, there is no basis redetermination under paragraph (b) of this section because there is only one share of S stock outstanding (and so there can be no disparity among members' bases in common shares and there are no outstanding preferred shares with respect to which there can be unrecognized gain or loss). See paragraph (b)(1)(ii)(A) of this section. Therefore, after the application of paragraph (b) of this section, the share is still a loss share and, as such, subject to this paragraph (c).

(iii) *Basis reduction under this paragraph (c).* Under this paragraph (c), M's $100 basis in the S share is reduced, but not below its $60 value by the lesser of the share's net positive adjustment and disconformity amount. There were no investment adjustments applied to M's basis in the share and so the share's net positive adjustment is $0. Thus, although the share's disconformity amount is $40 (the excess of M's $100 basis in the share over the share's $60 allocable portion of S's net inside attribute amount), no basis reduction is required under this paragraph (c).

(iv) *Application of paragraph (d) of this section.* After the application of this paragraph (c), M's sale of the S share is still a transfer of a loss share, and, accordingly, subject to paragraph (d) of this section. No adjustment is required under paragraph (d) of this section because there is no aggregate inside loss. See paragraph (d)(3)(iii) of this section.

*Example 3. Items accruing after S becomes a member.* (i) *Recognition of loss accruing after S becomes a member.* (A) *Facts.* On January 1, year 1, M purchases the sole outstanding share of S stock for $100. At that time, S owns two assets, Asset 1, with a basis of $0 and a value of $40, and Asset 2, with a basis and value of $60. In year 1, S sells Asset 1 for $40, recognizing a $40 gain. Also in year 1, the value of Asset 2 declines and S sells Asset 2 for $20, recognizing a $40 loss that is absorbed by the group. On December 31, year 1, M sells its S share for $60. After taking into account the effects of all applicable rules of law, M's basis in the S share is $100 (M's original $100 basis, unadjusted under § 1.1502–32 because the $40 gain recognized on the sale of Asset 1 and the $40 loss on the sale of Asset 2 net, resulting in an adjustment of $0). M's sale of the S share is a transfer of a loss share and therefore subject to this section.

(B) *Application of paragraph (b) of this section.* Although the transfer is subject to this section, there is no basis redetermination under paragraph (b) of this section because there is only one share of S stock outstanding (and so there can be no disparity among members' bases in common shares and there are no outstanding preferred shares with respect to which there can be unrecognized gain or loss). See paragraph (b)(1)(ii)(A) of this section. Therefore, after the application of paragraph (b) of this section, the share is still a loss share and, as such, subject to this paragraph (c).

(C) *Basis reduction under this paragraph (c).* Under this paragraph (c), M's basis in the S share is reduced, but not below the share's $60 value, by the lesser of the share's net positive adjustment and disconformity amount. The share's net positive adjustment is $0. Thus, although the share has a disconformity amount of $40 (the excess of M's basis in the share, $100, over the share's allocable portion of S's net inside attribute amount, $60), no basis reduction is required under this paragraph (c).

(D) *Application of paragraph (d) of this section.* After the application of this paragraph (c), M's sale of the S share is still a transfer of a loss share, and, accordingly, subject to paragraph (d) of this section. No adjustment is required under paragraph (d) of this section because there is no aggregate inside loss. See paragraph (d)(3)(iii) of this section.

(ii) *Recognition of gain accruing after S becomes a member.* (A) *Facts.* The facts are the same as in paragraph (i)(A) of this *Example 3*, except that M does not sell the S share and S does not sell either asset in year 1. In addition, in year 2, the value of Asset 1 declines to $0, the value of Asset 2 returns to $60, and S creates Asset 3 (with a basis of $0). In year 3, S sells Asset 3 for $40, recognizing a $40 gain. On December 31, year 3, M sells its S share for $100. After taking into account the effects of all applicable rules of law, M's basis in the S share is $140 (M's original $100 basis increased under § 1.1502–32 by $40 (the share's allocable portion of the gain recognized on the sale of Asset 3 in year 3)). M's sale of the S share is a transfer of a loss share and therefore subject to this section.

(B) *Application of paragraph (b) of this section.* Although the transfer is subject to this section, there is no basis redetermination under paragraph (b) of this section for the reasons set forth in paragraph (i)(B) of this *Example 3.* Therefore, after the application of paragraph (b) of this section, the share is still a loss share and, as such, subject to this paragraph (c).

(C) *Basis reduction under this paragraph (c).* Under this paragraph (c), M's basis in the S share, $140, is reduced, but not below value, $100, by the lesser of the share's net positive adjustment and disconformity amount. The share's net positive adjustment is $40 (the year 3 investment adjustment). The share's disconformity amount is the excess of its basis, $140, over its allocable portion of S's net inside attribute amount. S's net inside attribute amount is $100, the sum of S's money ($40 from the sale of Asset 3) and its basis in its assets ($60 (the sum of Asset 1's basis of $0 and Asset 2's basis of $60)). S's $100 net inside attribute amount is allocable entirely to the sole outstanding S share. Thus, the share's disconformity amount is the excess of $140 over $100, or $40. The lesser of the share's net positive adjustment, $40, and its disconformity amount, $40, is $40. Accordingly, the basis in the share is reduced by $40, from $140 to $100.

(D) *Application of paragraph (d) of this section.* Because M's sale of the S share is not a transfer of a loss share after the application of this paragraph (c), paragraph (d) of this section does not apply to the transfer.

(iii) *Recognition of income earned after S becomes a member.* The facts are the same as in paragraph (ii)(A) of this *Example 3*, except that instead of creating Asset 3, S earns $40 of income from services provided in year 3. Because the net positive adjustment includes items of income as well as items of gain, the results are the same as those described in paragraph (ii) of this *Example 3.*

*Example 4. Computing the disconformity amount.* (i) *Unrecognized loss reflected in stock basis.* (A) *Facts.* M owns the sole outstanding share of S stock with a basis of $100. S owns two assets, Asset 1 with a basis of $20 and a value of $60, and Asset 2 with a basis of $60 and a value of $40. In year 1, S sells Asset 1 for $60, recognizing a $40 gain. On December 31, year 1, M sells the S share for $100. After taking into account the effects of all applicable rules of law, M's basis in the S share is $140 (M's original $100 basis increased under § 1.1502–32 by $40, the share's allocable portion of the gain recognized on the sale of Asset 1). M's sale of the S share is a transfer of a loss share and therefore subject to this section.

(B) *Application of paragraph (b) of this section.* Although the transfer is subject to this section, there is no basis redetermination under paragraph (b) of this section because there is only one share of S stock outstanding (and so there can be no disparity among members' bases in common shares and there are no outstanding preferred shares with respect to which there can be unrecognized gain or loss). See paragraph (b)(1)(ii)(A) of this section. Therefore, after the application of paragraph (b) of this section, the share is still a loss share and, as such, subject to this paragraph (c).

(C) *Basis reduction under this paragraph (c).* Under this paragraph (c), M's basis in the S share, $140, is reduced, but not below the share's $100 value, by the lesser of the share's net positive adjustment and disconformity amount. The share's net positive adjustment is $40 (the year 1 investment adjustment). The share's disconformity amount is the excess of its basis, $140, over its allocable portion of S's net inside attribute amount. S's net inside attribute amount is $120, the sum of S's money ($60 from the sale of Asset 1) and S's basis in Asset 2, $60. S's net inside attribute amount is allocable entirely to the sole outstanding S share. Thus, the share's disconformity amount is $20, the excess of $140 over $120. The lesser of the share's net positive adjustment, $40, and its disconformity amount, $20, is $20. Accordingly, the basis in the share is reduced by $20, from $140 to $120.

(D) *Application of paragraph (d) of this section.* After the application of this paragraph (c), M's sale of the S share is still a transfer of a loss share, and, accordingly, S's attributes (to the extent of the $20 duplicated loss) are subject to reduction under paragraph (d) of this section.

(ii) *Loss carryover.* The facts are the same as in paragraph (i)(A) of this *Example 4*, except that Asset 2 has a basis of $0 (rather than $60) and S has a $60 loss carryover (as defined in paragraph (f)(6) of this section). The analysis is the same as paragraph (i) of this *Example 4*. Furthermore, the analysis of the application of this paragraph (c) would be the same if the $60 loss carryover were subject to a section 382 limitation from a prior ownership change, or if, instead, the $60 loss carryover were subject to the limitation in § 1.1502–21(c) on losses carried from separate return limitation years.

(iii) *Liabilities.* The facts are the same as in paragraph (i)(A) of this *Example 4*, except that S borrows $100 before M sells the S share. S's net inside attribute amount remains $120, computed as the sum of S's money ($160, $60 from the sale of Asset 1 plus the $100 borrowed) and S's basis in Asset 2, $60, less its liabilities, $100. Thus, the S share's disconformity amount remains the excess of $140 over $120, or $20. The results are the same as in paragraph (i) of this *Example 4.*

*Example 5. Computing the allocable portion of the net inside attribute amount.* (i) *Facts.* On January 1, year 1, M owns all five outstanding shares of S stock with a basis of $20 per share. S owns Asset with a basis of $0. In year 1, S sells Asset for $100, recognizing a $100 gain. On December 31, year 1, M sells one of the S shares, Share 1, for $20. After taking into account the effects of all applicable rules of law, M's basis in Share 1 is $40 (M's original $20 basis increased under § 1.1502–32 by $20 (the share's allocable portion of the gain recognized on the sale of Asset)). M's sale of Share 1 is a transfer of a loss share and therefore subject to this section.

(ii) *Application of paragraph (b) of this section.* Although the transfer is subject to this section, basis is not redetermined under paragraph (b) of this section because there is no disparity among M's bases in shares of S common stock and there are no shares of S preferred stock outstanding (so there can be no unrecognized gain or loss with respect to preferred shares). See paragraph (b)(1)(ii)(A) of this section. After the application of paragraph (b) of this section, M's sale of Share 1 is still a transfer of a loss share and therefore subject to this paragraph (c).

(iii) *Basis reduction under this paragraph (c).* Under this paragraph (c), M's $40 basis in Share 1 is reduced, but not below its $20 value by the lesser of the share's net positive adjustment and disconformity amount. Share 1's net positive adjustment is $20 (the year 1 investment adjustment). Share 1's disconformity amount is the excess of its $40 basis over its allocable portion of S's net inside attribute amount. S's net inside attribute amount is equal to the amount of S's money ($100 from the sale of the asset). Share 1's allocable portion of S's $100 net inside attribute amount is $20 (1/5 x $100). Thus, Share 1's disconformity amount is the excess of $40 over $20, or $20. The lesser of the share's $20 net positive adjustment and its $20 disconformity amount is $20. Accordingly, the basis in the share is reduced by $20, from $40 to $20.

(iv) *Application of paragraph (d) of this section.* Because M's sale of Share 1 is not a transfer of a loss share after the application of this paragraph (c), paragraph (d) of this section does not apply to the transfer.

*Example 6. Liabilities.* (i) *In general.* (A) *Facts.* On January 1, year 1, M purchases the sole outstanding share of S stock for $100. At that time, S owns Asset, with a basis of $0 and value of $100, and $100 cash. S also has a $100 liability. In year 1, S declares and makes a $60 dividend distribution to M and recognizes $20 of income. The value of Asset declines to $60 and, on December 31, year 1, M sells the S share for $20. After taking into account the effects of all applicable rules of law, M's basis in the S share is $60 (M's original $100 basis decreased under § 1.1502–32 by $40 (the net of the $60 distribution and the $20 income recognized)). M's sale of the S share is a transfer of a loss share and therefore subject to this section.

(B) *Application of paragraph (b) of this section.* Although the transfer is subject to this section, there is no basis redetermination under paragraph (b) of this section because there is only one share of S stock outstanding (and so there can be no disparity among members' bases in common shares and there are no outstanding preferred shares with respect to which there can be unrecognized gain or loss). See paragraph (b)(1)(ii)(A) of this section. Therefore, after the application of paragraph (b) of this section, the share is still a loss share and, as such, subject to this paragraph (c).

(C) *Basis reduction under this paragraph (c).* Under this paragraph (c), M's basis in the S share, $60, is reduced, but not below value, $20, by the lesser of the share's net positive adjustment and disconformity amount. The share's net positive adjustment is $20 (the year 1 investment adjustment, as defined in paragraph (b)(1)(iii) of this section). The share's disconformity amount is the excess of its basis, $60, over its allocable portion of S's net inside attribute amount. S's net inside attribute amount is negative $40, computed as the sum of S's money ($60 ($100 less the $60 distribution plus the $20 income recognized)) and S's basis in Asset, $0, less S's liability, $100. S's net inside attribute amount is allocable entirely to the sole outstanding S share. Thus, the share's disconformity amount is the excess of $60 over negative $40, or $100. The lesser of the share's net positive adjustment, $20, and its disconformity amount, $100, is $20. Accordingly, the basis in the share is reduced by $20, from $60 to $40.

(D) *Application of paragraph (d) of this section.* After the application of this paragraph (c), the S share is still a loss share and, accordingly, S's attributes are subject to reduction under paragraph (d) of this section. No adjustment is required under paragraph (d) of this section, however, because there is no aggregate inside loss. See paragraph (d)(3)(iii) of this section.

(ii) *Excluded cancellation of indebtedness income—insufficient attributes available for reduction under sections 108 and 1017, and § 1.1502–28.* (A) *Facts.* The facts are the same as in paragraph (i)(A) of this *Example 6*, except that M does not sell the S share. Instead, in year 4, Asset is destroyed in a fire and S spends its $60 on deductible expenses that are not absorbed by the group. S's loss becomes part of the consolidated net operating loss (CNOL). In year 5, S becomes insolvent and S's debt is discharged. Because of S's insolvency, S's discharge of indebtedness income is excluded under section 108 and, as a result, S's attributes are subject to reduction under sections 108 and 1017, and § 1.1502–28. S's only attribute is the portion of the CNOL attributable to S, $60, and it is reduced to $0. There are no other consolidated attributes. In year 5, the S stock (which is treated as a capital asset) becomes worthless under section 165, taking into account § 1.1502–80(c). After taking into account the effects of all applicable rules of law, M's basis in the S share is $60 (M's original $100 basis decreased under § 1.1502–32 by the year 1 investment adjustment of $40 (the net of the $60 distribution and the $20 income recognized). The investment adjustment for year 5 is $0 (the net of the $60 tax exempt income from the excluded COD applied to reduce attributes and the $60 noncapital, nondeductible expense from the reduction of S's portion of the CNOL)). Under paragraph (f)(10)(i)(D) of this section, a share is transferred on the last day of the taxable year during which it becomes worthless under section 165 if the share is treated as a capital asset, or the date the share becomes worthless if the share is not treated as a capital asset, taking into account § 1.1502–80(c). Accordingly, M transfers the loss share of S stock on December 31, year 5, and the transfer is therefore subject to this section.

(B) *Application of paragraph (b) of this section.* Although the transfer is subject to this section, there is no basis redetermination under paragraph (b) of this section for the reasons set forth in paragraph (i)(B) of this *Example 6*. Therefore, after the application of paragraph (b) of this section, the share is still a loss share and, as such, subject to this paragraph (c).

(C) *Basis reduction under this paragraph (c).* Under this paragraph (c), M's basis in its S share, $60, is reduced, but not below value, $0, by the lesser of the share's net positive adjustment and disconformity amount. The share's net positive adjustment is $20 (the year 1 investment adjustment, as defined in paragraph (b)(1)(iii) of this section). The share's disconformity amount is the excess of its basis, $60, over its allocable portion of S's net inside attribute amount. S's net inside attribute amount is $0. (The effects of the attribute reduction required under sections 108 and 1017 and § 1.1502–28 are taken into account in applying this section; therefore, for purposes of this section, S's portion of the CNOL is treated as eliminated under section 108 and § 1.1502–28.) S's net inside attribute amount is allocable entirely to the sole outstanding S share. Thus, the share's disconformity amount is the excess of $60 over $0, or $60. The lesser of the share's net positive adjustment, $20, and its disconformity amount, $60, is $20.

Accordingly, the basis in the share is reduced by $20, from $60 to $40, immediately before the transfer.

(D) *Application of paragraph (d) of this section.* After the application of this paragraph (c), the S share is still a loss share, and, accordingly, S's attributes are subject to reduction under paragraph (d) of this section. No adjustment is required under paragraph (d) of this section, however, because there is no aggregate inside loss. See paragraph (d)(3)(iii) of this section.

(iii) *Excluded cancellation of indebtedness income—full attribute reduction under sections 108 and 1017, and § 1.1502–28 (using attributes attributable to another member).* (A) *Facts.* The facts are the same as in paragraph (ii)(A) of this *Example 6* except that M loses the $60 distributed in year 1 and the group does not absorb the loss. Thus, as of December 31, year 5, the CNOL is $120, attributable $60 to S and $60 to P. As a result, under § 1.1502–28(a)(4), after the portion of the CNOL attributable to S is reduced to $0, the remaining $40 of excluded COD applies to the portion of the CNOL attributable to P, reducing it from $60 to $20. After taking into account the effects all applicable rules of law, M's basis in the S share at the end of year 5 is $100 (M's original $100 basis decreased under § 1.1502–32 by $40 at the end of year 1 and then increased under § 1.1502–32 by $40 at the end of year 5 (the net of the $100 tax exempt income from the excluded COD applied to reduce attributes and the $60 noncapital, nondeductible expense from the reduction of S's portion of the CNOL)). Under paragraph (f)(10)(i)(D) of this section, a share is transferred on the last day of the taxable year during which it becomes worthless under section 165 if the share is treated as a capital asset, or the date the share becomes worthless if the share is not treated as a capital asset, taking into account § 1.1502–80(c). Accordingly, M transfers the loss share of S stock on December 31, year 5, and the transfer is therefore subject to this section.

(B) *Application of paragraph (b) of this section.* Although the transfer is subject to this section, there is no basis redetermination under paragraph (b) of this section for the reasons set forth in paragraph (i)(B) of this *Example 6.* Therefore, after the application of paragraph (b) of this section, the share is still a loss share and, as such, subject to this paragraph (c).

(C) *Basis reduction under this paragraph (c).* Under this paragraph (c), M's basis in the S share, $100, is reduced, but not below value, $0, by the lesser of the share's net positive adjustment and disconformity amount. The share's net positive adjustment is $60 (the sum of the year 1 investment adjustment, as defined in paragraph (b)(1)(iii) of this section, $20, and the year 5 investment adjustment, $40). The share's disconformity amount is the excess of its basis, $100, over its allocable portion of S's net inside attribute amount. S's net inside attribute amount is $0 (taking into account the effects of the attribute reduction required under sections 108 and 1017 and § 1.1502–28). S's net inside attribute amount is allocable entirely to the sole outstanding S share. The share's disconformity amount is therefore $100. The lesser of the share's net positive adjustment, $60, and its disconformity amount, $100, is $60. Accordingly, M's basis in the share is reduced by $60, from $100 to $40, immediately before the transfer.

(D) *Application of paragraph (d) of this section.* After the application of this paragraph (c), the S share is still a loss share, and, accordingly, S's attributes are subject to reduction under paragraph (d) of this section. No adjustment is required under paragraph (d) of this section, however, because there is no aggregate inside loss. See paragraph (d)(3)(iii) of this section.

*Example 7. Lower-tier subsidiary (no transfer of lower-tier stock).* (i) *Facts.* M owns the sole outstanding share of S stock with a basis of $160. S owns two assets, Asset 1 with a basis and value of $100, and the sole outstanding share of S1 stock with a basis of $60. S1 owns one asset, Asset 2, with a basis of $20 and value of $60. In year 1, S1 sells Asset 2 to X for $60, recognizing a $40 gain. On December 31, year 1, M sells its S share to Y, a member of another consolidated group, for $160. After taking into account the effects of all applicable rules of law, M's basis in the S share is $200 (M's original $160 basis increased under § 1.1502–32 by $40 (to reflect the tier-up of the adjustment to S's basis in the S1 stock for the gain recognized on S1's sale of Asset 2)). M's sale of the S share is a transfer of a loss share and therefore subject to this section. (S does not transfer the S1 share because S and S1 are members of the same group following the transfer. See paragraph (f)(10) of this section.)

(ii) *Application of paragraph (b) of this section.* Although the transfer is subject to this section, there is no basis redetermination under paragraph (b) of this section because there is only one share of S stock outstanding (and so there can be no disparity among members' bases in common shares and there are no outstanding preferred shares with respect to which there can be unrecognized gain or loss). See paragraph (b)(1)(ii)(A) of this section. Therefore, after the application of paragraph (b) of this section, the share is still a loss share and, as such, subject to this paragraph (c).

(iii) *Basis reduction under this paragraph (c).* (A) *In general.* Under this paragraph (c), M's basis in the S share, $200, is reduced, but not below value, $160, by the lesser of the share's net positive adjustment and disconformity amount. The S share's net positive adjustment is $40. The share's disconformity amount is the excess of its basis, $200, over the share's allocable portion of S's net inside attribute amount. S's net inside attribute amount is the sum of S's basis in Asset 1, $100, and S's basis in the S1 share.

(B) *S's basis in the S1 share.* Although S's actual basis in the S1 share is $100 (S's original $60 basis increased under § 1.1502–32 by $40 (the share's allocable portion of the gain recognized on the sale of Asset 2)), for purposes of computing the S share's disconformity amount, S's net inside attribute amount is determined by treating S's basis in the S1 share as tentatively reduced by the lesser of the S1 share's net positive adjustment and the S1 share's disconformity amount. The S1 share's net positive adjustment is $40 (the year 1 investment adjustment). The S1 share's disconformity amount is the excess of its basis, $100, over the share's allocable portion of S1's net inside attribute amount. S1's net inside attribute amount is equal to the amount of S1's money ($60 from the sale of Asset 2), and is allocable entirely to the sole outstanding S1 share. Thus, the S1 share's disconformity amount is the excess of $100 over $60, or $40. The lesser of the S1 share's net positive adjustment, $40, and its disconformity amount, $40, is $40. Accordingly, for purposes of computing the disconformity amount of the S share, S's net inside attribute amount is determined by treating S's basis in its S1 share as tentatively reduced by $40, from $100 to $60.

(C) *The disconformity amount of M's S share.* S's net inside attribute amount is treated as the sum of its basis in Asset 1, $100, and its tentatively reduced basis in the S1 share, $60, or $160. S's net inside attribute amount is allocable entirely to the sole outstanding S share. Thus, the S share's disconformity amount is the excess of $200 over $160, or $40.

(D) *Amount of reduction.* M's basis in its S share is reduced by the lesser of the S share's net positive adjustment, $40, and disconformity amount, $40, or $40. Accordingly, M's basis in the S share is reduced by $40, from $200 to $160.

(E) *Effect on S's basis in its S1 share.* The tentative reduction under this paragraph (c) has no effect on S's actual basis in the S1 share. Thus, after the application of this paragraph (c), S owns the S1 share with a basis of $100 (S's original $60 basis increased under § 1.1502–32 by $40 (the share's allocable portion of the gain recognized on the sale of Asset 2)).

(iv) *Application of paragraph (d) of this section.* Because M's sale of the S share is not a transfer of a loss share after the application of this paragraph (c), paragraph (d) of this section does not apply to the transfer.

(d) *Attribute reduction to prevent duplication of loss*—(1) *In general.* The rules of this paragraph (d) reduce attributes of S and its lower-tier subsidiaries to the extent they duplicate a net loss on shares of S stock transferred by members in one transaction. This rule furthers single-entity principles by preventing S (or its lower-tier subsidiaries) from using deductions and losses to the extent that the group or its members (including former members) have either used, or preserved for later use, a corresponding loss in S shares.

(2) *Attribute reduction rule*—(i) *General rule.* If a transferred share is a loss share after taking into account the effects of all applicable rules of law, including any adjustments under paragraph (b), (c), or (d)(5)(iii) of this section, S's attributes are reduced by S's attribute reduction amount immediately before the transfer. S's attribute reduction amount is determined under paragraph (d)(3) of this section and

applied in accordance with the provisions of paragraphs (d)(4), (d)(5), and (d)(6) of this section. In addition, paragraph (d)(7) of this section provides for additional attribute reduction in the case of certain transfers due to worthlessness and certain transfers not followed by a separate return year.

(ii) *Attribute reduction amount less than five percent of value.* This paragraph (d) generally does not apply to a transaction if the aggregate attribute reduction amount in the transaction is less than five percent of the aggregate value of the shares transferred by members in the transaction. However, in such a case, P may elect to apply this paragraph (d) to the transaction. If such an election is made, this paragraph (d) will apply with respect to the entire aggregate attribute reduction amount determined in the transaction. Such an election is made in the manner provided in paragraph (e)(5) of this section.

(3) *Attribute reduction amount*—(i) *In general.* S's *attribute reduction amount* is the lesser of—

(A) The net stock loss (as defined in paragraph (d)(3)(ii) of this section); and

(B) S's aggregate inside loss (as defined paragraph (d)(3)(iii) of this section).

(ii) *Net stock loss.* The *net stock loss* is the excess, if any, of—

(A) The aggregate basis of all shares of S stock transferred by members in the transaction; over

(B) The aggregate value of those shares.

(iii) *Aggregate inside loss*—(A) *In general.* S's *aggregate inside loss* is the excess, if any, of—

(*1*) S's net inside attribute amount; over

(*2*) The value of all outstanding shares of S stock.

(B) *Net inside attribute amount.* S's *net inside attribute amount* generally has the same meaning as in paragraph (c)(5) of this section. However, if S holds stock of a lower-tier subsidiary, the provisions of paragraph (d)(5) of this section (and not the provisions of paragraph (c)(6) of this section) modify the computation of S's net inside attribute amount for purposes of this paragraph (d).

(iv) *Lower-tier subsidiaries.* See paragraph (d)(5) of this section for special rules relating to the application of this paragraph (d) if S owns shares of stock of a subsidiary.

(4) *Application of attribute reduction amount*—(i) *Attributes available for reduction.* S's attributes available for reduction under this paragraph (d) are—

(A) *Category A.* Capital loss carryovers;

(B) *Category B.* Net operating loss carryovers;

(C) *Category C.* Deferred deductions; and

(D) *Category D.* Basis of assets other than assets identified as Class I assets in § 1.338–6(b)(1).

(ii) *Rules of application*—(A) Category A, Category B, and Category C attributes. S's attribute reduction amount is first allocated and applied to reduce the attributes in Category A, Category B, and Category C.

(*1*) *Attribute reduction amount less than total attributes in Category A, Category B, and Category C.* If S's attribute reduction amount is less than S's total attributes in Category A, Category B, and Category C, all of S's attribute reduction amount will be applied to reduce such attributes. However, P may specify the allocation of S's attribute reduction amount among such attributes. An election to specify the allocation of S's attribute reduction amount is made in the manner provided in paragraph (e)(5) of this section. To the extent that P does not specify an allocation of S's attribute reduction amount, S's attribute reduction amount will be applied to reduce any Category A attributes not reduced as a result of the specific allocation of S's attribute reduction amount, from oldest to newest, until they are eliminated. Then, any remaining attribute reduction amount will be applied to reduce any Category B attributes not reduced as a result of the specific allocation of S's attribute reduction amount, from oldest to newest, until they are eliminated. Finally, any remaining attribute reduction amount will be applied to reduce any Category C attributes not reduced as a result of the specific allocation of S's attribute reduction amount, proportionately.

(*2*) *Attribute reduction amount not less than the total attributes in Category A, Category B, and Category C.* If S's attribute reduction amount equals or exceeds S's total attributes in Category A, Category B, and Category C, all such attributes are eliminated and any remaining attribute reduction amount is allocated and applied as provided in paragraphs (d)(4)(ii)(B) and (d)(4)(ii)(C) of this section.

(B) *Category D attributes.* Any attribute reduction amount not applied to reduce S's Category A, Category B, and Category C attributes is allocated and applied as provided in this paragraph (d)(4)(ii)(B) and, to the extent applicable, paragraph (d)(5) of this section.

(*1*) *Allocation if S holds stock of another subsidiary.* If S holds shares of stock of another subsidiary, the attribute reduction amount not applied to reduce S's Category A, Category B, and Category C attributes is first allocated between S's shares of lower-tier subsidiary stock and S's other Category D assets in the manner provided in paragraph (d)(5)(ii) of this section. S's attribute reduction amount allocated to shares of lower-tier subsidiary stock is applied to reduce S's bases in those shares, becomes an attribute reduction amount of the lower-tier subsidiary, and, subject to certain limitations, reduces the lower-tier subsidiary's attributes. See paragraphs (d)(5)(iii) through (d)(5)(vi) of this section.

(*2*) *Allocation and application of attribute reduction amount not applied to lower-tier subsidiary stock.* Any portion of S's attribute reduction amount not applied to reduce S's Category A, Category B, and Category C attributes and not allocated to lower-tier subsidiary stock is allocated to S's Category D assets other than lower-tier subsidiary stock in the manner provided in this paragraph (d)(4)(ii)(B)(*2*). Such amount is first allocated to S's bases (if any) in its assets identified as Class VII assets in § 1.338–6(b)(2)(vii). If the attribute reduction amount allocated to Class VII assets is less than S's aggregate basis in those assets, it is applied proportionately (by basis) to reduce the bases of such assets. If the attribute reduction amount allocated to Class VII assets equals or exceeds S's aggregate basis in those assets, it is applied to reduce the bases of such assets to zero. Any remaining attribute reduction amount is then allocated and applied in the same manner to reduce S's bases (if any) in assets identified as Class VI assets in § 1.338–6(b)(2)(vi), and then to reduce S's bases (if any) in its assets identified in § 1.338–6(b)(2) as Class V, Class IV, Class III, and Class II, successively.

(C) *Attribute reduction amount exceeding attributes available for reduction.* If the amount to be allocated and applied to attributes in Category D other than lower-tier subsidiary stock exceeds the amount of attributes in that category, then—

(*1*) To the extent of any liabilities of S that are not taken into account for tax purposes before the transfer, such excess amount is suspended. The suspended amount is applied proportionately to reduce any amounts attributable to S that would be deductible or capitalizable as a result of such liabilities being taken into account by S or any other person. Solely for purposes of this paragraph (d)(4)(ii)(C)(*1*) and paragraph (d)(5)(ii)(B) of this section, the term *liability* means any liability or

obligation the satisfaction of which would be required to be capitalized as an assumed liability by a person that purchased all of S's assets and assumed all of S's liabilities in a single transaction.

(*2*) To the extent such excess amount is greater than any amount suspended under paragraph (d)(4)(ii)(C)(*1*) of this section, it is disregarded and has no further effect.

(iii) *Time and effect of attribute reduction.* In general, the reduction of attributes is effective immediately before the transfer of a loss share of S stock. If the reduction to a member's basis in a share of lower-tier subsidiary stock exceeds the basis of that share, to the extent the excess is not restored under paragraph (d)(5)(vi) of this section it is an excess loss account in that share (and such excess loss account is not taken into account under § 1.1502–19 or otherwise as a result of the transaction). The reductions to attributes required under this paragraph (d)(4), including by reason of paragraph (d)(5)(v) of this section (tier down of attribute reduction amounts to lower-tier subsidiaries), are not noncapital, nondeductible expenses described in § 1.1502–32(b)(2)(iii).

(5) *Special rules applicable if S holds stock of another subsidiary.* If S holds shares of stock of any other subsidiary (S1) as of a transfer of loss shares of S stock, the rules of this paragraph (d)(5) apply with respect to each such subsidiary.

(i) *Treatment of lower-tier subsidiary stock for computation of S's attribute reduction amount.* For purposes of determining S's net inside attribute amount and attribute reduction amount under paragraph (d)(3) of this section—

(A) *Single share.* All of S's shares of S1 stock held as of the transfer of S stock (whether or not transferred in, or held by S immediately after, the transaction) are treated as a single share of stock (generally referred to as the S1 stock); and

(B) *Deemed basis.* S's basis in its S1 stock is treated as its *deemed basis* in the stock, which is equal to the greater of—

(*1*) The sum of S's basis in each share of S1 stock (adjusted to reflect any gain or loss recognized on the transfer of any S1 shares in the transaction, whether allowed or disallowed); and

(*2*) The portion of S1's net inside attribute amount allocable to S's shares of S1 stock.

(C) *Multiple tiers.* For purposes of computing deemed basis under paragraph (d)(5)(i)(B) of this section, a subsidiary's basis in stock of a lower-tier subsidiary is the deemed basis in that lower-tier subsidiary stock. Thus, if stock is held in multiple tiers, the computation of deemed basis begins at the lowest tier, so that the computation of deemed basis at each tier takes into account the deemed basis of all lower-tier shares.

(ii) *Allocation of S's attribute reduction amount between lower-tier subsidiary stock and other Category D assets.* The portion of S's attribute reduction amount that is not applied to reduce S's Category A, Category B, and Category C attributes must be allocated between each of S's deemed single shares of S1 stock and all of S's other Category D assets. For this purpose, S's Category D assets other than lower-tier subsidiary stock are treated as one asset with a basis equal to the aggregate bases of all Category D assets other than lower-tier subsidiary stock (non-stock Category D asset). S's attribute reduction amount is allocated proportionately (by basis) between (among) the non-stock Category D asset and S's deemed single share(s) of S1 stock. (See paragraphs (d)(4)(ii)(B)(*2*) and (d)(4)(ii)(C) of this section regarding the portion of S's attribute reduction amount allocated to the Category D assets other than lower-tier subsidiary stock.) For this purpose, S's basis in each deemed single share of S1 stock is its deemed basis (determined under paragraphs (d)(5)(i)(B) and (d)(5)(i)(C) of this section), reduced by—

(A) The value of S's transferred shares of S1 stock; and

(B) The nontransferred S1 shares' allocable portion of the excess of S1's non-loss assets over S1's liabilities (including liabilities described in paragraph (d)(4)(ii)(C)(*1*) of this section). For this purpose, S1's non-loss assets are—

(*1*) S1's assets identified as Class I assets in § 1.338–6(b)(1),

(*2*) The value of S1's transferred shares of lower-tier subsidiary stock, and

(*3*) The nontransferred lower-tier subsidiary shares' allocable portions of lower-tier non-loss assets (net of liabilities, including liabilities described in paragraph (d)(4)(ii)(C)(*1*) of this section) of all lower-tier subsidiaries.

(iii) *Application of attribute reduction amount to S's S1 stock.* The portion of S's attribute reduction amount allocated under paragraph (d)(5)(ii) of this section to each deemed single share of S1 stock (allocated attribute reduction amount) is apportioned among, and applied to reduce S's bases in, individual S1 shares in accordance with the following—

(A) No portion of the allocated attribute reduction amount is apportioned to an individual share of transferred S1 stock if gain or loss is recognized on its transfer (recognition transfer);

(B) The allocated attribute reduction amount is apportioned among all of S's other shares of S1 stock in a manner that, first reduces the loss in and disparity among S's bases in loss shares of S1 preferred stock to the greatest extent possible, and then reduces the disparity among S's bases in the shares of S1 common stock (other than those transferred in a recognition transfer) to the greatest extent possible;

(C) The allocated attribute reduction amount apportioned to an individual S1 share is applied to reduce the basis of that share to, but not below, value if the share is either a preferred share or a common share that is transferred other than in a recognition transfer; and

(D) The allocated attribute reduction amount apportioned to an individual S1 share is applied to reduce the basis of that share without regard to value if the share is a common share that is not transferred in the transaction.

(iv) *Unapplied allocated attribute reduction amount.* Any portion of the allocated attribute reduction amount that is not applied to reduce S's basis in a share of S1 stock has no effect on any other attributes of S, it is not a noncapital, nondeductible expense of S, and it does not cause S to recognize income or gain. However, such amounts continue to be part of the allocated attribute reduction amount for purposes of the tier down rule in paragraph (d)(5)(v) of this section.

(v) *Tier down of attribute reduction amount*—(A) *General rule.* The allocated attribute reduction amount of each deemed single share of S1 stock is an attribute reduction amount of S1 (tier-down attribute reduction amount). Accordingly, the tier-down attribute reduction amount, in combination with any attribute reduction amount computed with respect to the transferred S1 shares (if any) (direct S1 attribute reduction amount), applies to reduce S1's attributes under the provisions of this paragraph (d). The tier-down attribute reduction amount is an attribute reduction amount of S1 that must be allocated to S1's assets, and may become an allocated attribute reduction amount of lower-tier subsidiary stock (and thus a tier-down attribute reduction amount of a lower-tier subsidiary), even if its application to S1's attributes is limited under paragraph (d)(5)(v)(B) of this section.

(B) *Conforming limitation on reduction of lower-tier subsidiary's attributes.* Notwithstanding the general rule in paragraph (d)(5)(v)(A) of this section, and unless P elects otherwise in the manner provided in paragraph (e)(5)

of this section, the application of S1's tier-down attribute reduction amount to S1's attributes is limited to an amount equal to the excess of the portion of S1's net inside attribute amount that is allocable to all S1 shares held by members as of the transaction (whether or not transferred in the transaction) over the sum of—

(*1*) Any direct S1 attribute reduction amount;

(*2*) The aggregate value of all S1 shares transferred by members in the transaction with respect to which gain or loss was recognized (recognition transfer);

(*3*) The sum of all members' bases (after any reduction under this section, including this paragraph (d)) in any shares of S1 stock transferred by members in the transaction (other than in a recognition transfer), reduced by any direct S1 attribute reduction amount computed with respect to the transfer of such S1 shares; and

(*4*) The sum of all members' bases (after any reduction under this section, including this paragraph (d)) in any nontransferred shares of S1 stock held as of the transaction.

(vi) *Stock basis restoration*—(A) *In general.* After paragraph (d)(5)(v) of this section has applied with respect to all shares of subsidiary stock transferred in the transaction, lower-tier subsidiary stock basis is restored under this paragraph (d)(5)(vi). Under this paragraph (d)(5)(vi), the reductions to members' bases in shares of lower-tier subsidiary stock under paragraph (d)(5)(iii) of this section are reversed to the extent necessary to restore such bases to an amount that conforms the basis of each such share to its allocable portion of the subsidiary's net inside attribute amount, taking into account any reductions under this paragraph (d). Restoration adjustments are first made at the lowest tier and then at each next higher tier successively. Restoration adjustments do not tier up to affect the bases of higher-tier shares. Rather, restoration is computed and applied separately at each tier. For purposes of this rule, when computing a subsidiary's net inside attribute amount—

(*1*) The subsidiary's basis in stock of a lower-tier subsidiary is the actual basis of the stock after application of this paragraph (d); and

(*2*) Any attribute reduction amount allocated to the subsidiary's Category D assets other than lower-tier subsidiary stock that is suspended under paragraph (d)(4)(ii)(C)(*1*) of this section is treated as reducing the subsidiary's net inside attribute amount.

(B) *Election not to restore basis.* Notwithstanding paragraph (d)(5)(vi)(A) of this section, P may elect not to restore basis in stock of a lower-tier subsidiary that was reduced under paragraph (d)(5)(iii) of this section. An election not to restore lower-tier subsidiary stock basis is made in the manner provided in paragraph (e)(5) of this section.

(6) *Elections to reduce the potential for loss duplication*—(i) *In general.* Notwithstanding the general operation of this paragraph (d), P may elect to reduce the potential for loss duplication, and thereby reduce or avoid attribute reduction. To the extent of S's attribute reduction amount tentatively computed without regard to any election under this paragraph (d)(6), P may elect—

(A) To reduce all or any portion (including any portion in excess of a specified amount) of members' bases in transferred loss shares of S stock;

(B) To reattribute all or any portion (including any portion in excess of a specified amount) of S's Category A, Category B, and Category C attributes (including such attributes of lower-tier subsidiaries), to the extent they would otherwise be subject to reduction under this paragraph (d); or

(C) Any combination thereof.

(ii) *Manner and effect of election.* An election to reduce loss duplication under this paragraph (d)(6) is made in the manner provided in paragraph (e)(5) of this section. Although such elections are irrevocable, they have no effect—

(A) If there is no attribute reduction amount; or

(B) To the extent S's attribute reduction amount is less than the amount specified in the election.

(iii) *Order of application*—(A) *Stock of one subsidiary transferred in the transaction.* If shares of stock of only one subsidiary are transferred in the transaction, any stock basis reduction and reattribution of attributes (including from lower-tier subsidiaries) is deemed to occur immediately before the application of this paragraph (d). If a transferred share is still a loss share after giving effect to this election, the other provisions of this paragraph (d) then apply with respect to that share.

(B) *Stock of multiple subsidiaries transferred in the transaction.* If shares of stock of more than one subsidiary are transferred in the transaction and elections under this paragraph (d)(6) are made with respect to transfers of stock of subsidiaries in multiple tiers, effect is given to the elections from the lowest tier to the highest tier in the manner provided in this paragraph (d)(6)(iii)(B). The amount of the election for the transfer at the lowest tier is determined by applying this paragraph (d) with respect to the transferred loss shares of this lowest-tier subsidiary immediately after applying paragraphs (b) and (c) of this section to the stock of such subsidiary. The effect of any stock basis reduction or reattribution of losses immediately tiers up under § 1.1502–32 to adjust members' bases in higher-tier shares. Elections and adjustments are then made with respect to transfers at each next higher tier successively.

(iv) *Special rules for reattribution elections*—(A) *In general.* Because the reattribution election is intended to provide the group a means to retain certain S attributes, and not to change the location of attributes where S continues to be a member of the same group as P, the election to reattribute attributes may only be made if S becomes a nonmember (within the meaning of § 1.1502–19(c)(2)) as a result of the transaction and S does not become a member of any group that includes P. The election to reattribute S's attributes can only be made for attributes in Category A, Category B, and Category C. The attributes that would otherwise be reduced under paragraph (d)(4) of this section may be reattributed to P. Accordingly, P may specify the attributes in Category A, Category B, and Category C to be reattributed. Such an election is made in the manner provided in paragraph (e)(5) of this section. To the extent that P elects to reattribute attributes but does not specify the attributes to be reattributed, any attributes not specifically reattributed will be reattributed in the default amount, order, and category described in paragraph (d)(4)(ii)(A)(*1*) of this section. P succeeds to reattributed attributes as if such attributes were succeeded to in a transaction to which section 381(a) applies. Any owner shift of the subsidiary (including any deemed owner shift resulting from section 382(g)(4)(D) or section 382(l)(3)) in connection with the transaction is not taken into account under section 382 with respect to the reattributed attributes. (See § 1.1502–96(d) for rules relating to section 382 and the reattribution of losses under this paragraph (d)(6).) The reattribution of S's attributes is a noncapital, nondeductible expense described in § 1.1502–32(b)(2)(iii). See § 1.1502–32(c)(1)(ii)(A) regarding special allocations applicable to such noncapital, nondeductible expense. If P elects to reattribute S attributes (including attributes of a lower-tier subsidiary) and reduce S stock basis, the reattribution is given effect before the stock basis reduction.

(B) *Insolvency limitation.* If S, or any higher-tier subsidiary, is insolvent within the meaning of section 108(d)(3) at the time of the transfer, S's losses may be reattributed only to the extent they exceed the sum of the separate insolvencies of any subsidiaries (taking into account only S and its higher-tier subsidiaries) that are insolvent. For purposes of determining insolvency, liabilities owed to higher-tier members are not taken into account, and stock of a subsidiary that is limited and preferred as to dividends and that is not owned by higher-tier members is treated as a liability to the extent of the amount of preferred distributions to which the stock would be entitled if the subsidiary were liquidated on the date of the transfer.

(C) *Limitation on reattribution from lower-tier subsidiaries.* P's ability to reattribute attributes of lower-tier subsidiaries is limited under this paragraph (d)(6)(iv)(C) in order to prevent circular computations of the attribute reduction amount. Accordingly, attributes that would otherwise be reduced as a result of tier-down attribute reduction under paragraph (d)(5)(v) of this section may only be reattributed to the extent that the reduction in the basis of any lower-tier subsidiary stock resulting from the noncapital, nondeductible expense (as allocated under § 1.1502–32(c)(1)(ii)(A)(*2*)) will not create an excess loss account in any such stock.

(v) *Special rules for stock basis reduction elections*—(A) *In general.* An election to reduce basis in S stock is made with respect to all members' bases in loss shares of S stock that are transferred in the transaction. The reduction is allocated among all such shares in proportion to the amount of loss on each share. This reduction in S stock basis is a noncapital, nondeductible expense described in § 1.1502–32(b)(2)(iii) of the transferring member.

(B) *Adjustment to the attribute reduction amount.* The attribute reduction amount (determined under paragraph (d)(3)(i) of this section) is treated as reduced by the amount of any elective reduction in the basis of the S stock under this paragraph (d)(6). Accordingly, the election to reduce stock basis under this paragraph (d)(6) is treated as reducing or eliminating the duplication even if the shares of S stock are loss shares after giving effect to the election.

(C) *Deemed stock basis reduction election in the case of certain disallowed stock losses.* If there is a net stock loss in transferred shares after taking into account any actual elections under this paragraph (d)(6), and the stock loss would otherwise be permanently disallowed (for example, under section 311(a)), P will be deemed to have made a stock basis reduction election equal to such net stock loss.

(7) *Additional attribute reduction in the case of certain transfers due to worthlessness and certain transfers not followed by a separate return year*—(i) *In general.* Notwithstanding any other provision of this paragraph (d), if a transfer is subject to this paragraph (d)(7) any of S's Category A, Category B, and Category C attributes not otherwise reduced or reattributed under this paragraph (d), and any credit carryover attributable to S, including any consolidated credits that would be apportioned to S under the principles of § 1.1502–79 if S had a separate return year, are eliminated. Attributes other than consolidated tax attributes are eliminated under this paragraph (d)(7)(i) immediately before the transfer subject to this paragraph (d)(7)(i). The elimination of attributes under this paragraph (d)(7)(i) is not a noncapital, nondeductible expense described in § 1.1502–32(b)(2)(iii).

(ii) *Transfers subject to this paragraph (d)(7).* A transfer is subject to this paragraph (d)(7) if—

(A) M transfers a share of S stock solely by reason of a transfer defined in paragraph (f)(10)(i)(D) of this section (worthlessness where the provisions of § 1.1502–80(c) are satisfied), M recognizes a net deduction or loss on the share, and S is a member of the group on the day following the last day of the group's taxable year during which the share becomes worthless under section 165 (taking into account the provisions of § 1.1502–80(c)), or

(B) M recognizes a net deduction or loss on the stock of S in a transaction in which S ceases to be a member and does not become a nonmember within the meaning of § 1.1502–19(c)(2).

(iii) *Example.* The application of this paragraph (d) to transfers due to worthlessness and to loss transfers not followed by separate return years is illustrated by the following example.

*Example.* (i) *Worthlessness where S continues as a member.* M owns the sole share of S stock. The share is worthless under section 165. In addition, S has disposed of all its assets within the meaning of § 1.1502–19(c)(1)(iii)(A) and therefore satisfies the provisions of § 1.1502–80(c). M claims a worthless securities deduction with respect to the share. The worthlessness is a transfer of the S share, a loss share, and therefore subject to this section. After the application of paragraphs (b) and (c) of this section, M's basis in the share (and therefore M's net stock loss) is $75. The portion of the consolidated net operating loss attributable to S is $100. Under the general rules of this paragraph (d), S's attribute reduction amount is $75 (the lesser of M's $75 net stock loss and S's $100 aggregate inside loss ($100 net inside attribute amount over $0 value of S share)). S's attributes are reduced by $75, from $100 to $25. In addition, if S remains a member of the P group, this paragraph (d)(7) applies to eliminate the remaining $25 of the consolidated net operating loss attributable to S because the S share is worthless, and M recognizes a deduction (taking into account § 1.1502–80(c)) with respect to the share. Accordingly, after the application of this section, M recognizes a $75 worthless securities deduction, S has $0 net inside attributes, and the consolidated net operating loss is reduced by a total of $100.

(ii) *Dissolution of insolvent subsidiary.* The facts are the same as in paragraph (i) of this *Example,* except that S is insolvent, does not dispose of all its assets within the meaning of § 1.1502–19(c)(1)(iii)(A), M causes S to be legally dissolved, and the S share held by M is cancelled without consideration. Under paragraph (d)(7)(ii)(B) of this section, the dissolution of S is subject to this paragraph (d)(7) and the result is the same as in paragraph (i) of this *Example.* The result would also be the same if instead of being legally dissolved, S was converted into an entity that is disregarded as separate from M.

(iii) *Stock cancelled in connection with a section 381(a) transaction with another member.* M owns the sole share of S common stock with a basis of $75. M1 owns the sole share of S preferred stock. The value of S's assets (net of liabilities) is less than the liquidation preference on the S preferred stock. In a reorganization described in section 368(a)(1)(D), S transfers all of its assets to M2 in exchange for M2 common stock and M2's assumption of S's liabilities, S distributes all of the M2 common stock received in the exchange to M1 in exchange for M1's S preferred stock, the S common stock held by M is cancelled without consideration, and S ceases to exist. Notwithstanding that M is not entitled to treat its common share of S stock as worthless until § 1.1502–80(c) is satisfied, M's share is transferred within the meaning of paragraph (f)(10)(i)(A) of this section because M ceases to own the share in a transaction in which, but for this section (and notwithstanding the deferral of any amount recognized on the transfer, other than by reason of § 1.1502–13), M would recognize a loss or deduction with respect to the share. Accordingly, there is a transfer of the S common share and this section applies to the transfer. There are no adjustments under paragraphs (b) or (c) of this section because no investment adjustments have been applied to the bases of the shares. The transfer of the S common stock is subject to the general rules of this paragraph (d), but is not subject to the additional attribute reduction under this paragraph (d)(7) because the transfer was not solely by reason of worthlessness where § 1.1502–80(c) is satisfied, and S did not cease to be a member because M2 is a successor to S.

(iv) *Stock cancelled in connection with a section 381(a) transaction with a nonmember.* The facts are the same as in

paragraph (iii) of this *Example,* except that the S preferred share is held by X, instead of M2 acquiring S's assets, S merges into Y in a reorganization described in section 368(a)(1)(A), M1 receives all of the Y stock issued in the merger in exchange for M1's S preferred stock, and Y does not become a member as a result of the transaction. M treats the cancelled S common stock as worthless, and § 1.1502–80(c) is satisfied because S ceases to be a member. In this case, there is a transfer of M's S common share because it becomes worthless (taking into account § 1.1502–80(c)); because M ceases to own the share in a transaction in which, but for this section (and notwithstanding the deferral of any amount recognized on the transfer, other than by reason of § 1.1502–13), M would recognize a loss or deduction with respect to the share; and because M and S cease to be members of the same group. The transfer of the S common stock is subject to the general rules of this paragraph (d), but is not subject to the additional attribute reduction under this paragraph (d)(7) because the transfer was not solely by reason of worthlessness where § 1.1502–80(c) is satisfied and, although S did cease to be a member, S became a nonmember within the meaning of § 1.1502–19(c)(2) because Y is a successor to S.

(8) *Examples.* The application of this paragraph (d) is illustrated by the following examples:

*Example 1. Computation of attribute reduction amount.* (i) *Transfer of all S shares.* (A) *Facts.* M owns all 100 of the outstanding shares of S stock with a basis of $2 per share. S owns land with a basis of $100, has a $120 loss carryover, and has no liabilities. Each share has a value of $1. M sells 30 of the S shares to X for $30. As a result of the sale, M and S cease to be members of the same group. Accordingly, all 100 of the S shares are transferred. See paragraphs (f)(10)(i)(A), (f)(10)(i)(B), and (f)(10)(i)(C) (with respect to the 30 S shares sold to X) of this section. M's transfer of the S shares is a transfer of loss shares and therefore subject to this section.

(B) *Application of paragraphs (b) and (c) of this section.* Although the transfer is subject to this section, there is no basis redetermination under paragraph (b) of this section because there is no disparity among M's bases in shares of S common stock and there are no shares of S preferred stock outstanding (so there can be no unrecognized gain or loss on preferred stock). See paragraph (b)(1)(ii)(A) of this section. Therefore, after the application of paragraph (b) of this section, the share is still a loss share and, as such, subject to paragraph (c) of this section. No adjustment is required under paragraph (c) of this section because the net positive adjustment is $0. See paragraph (c)(3) of this section. Thus, after the application of paragraph (c) of this section, M's transfer of the S shares is still a transfer of loss shares and, accordingly, subject to this paragraph (d).

(C) *Attribute reduction under this paragraph (d).* Under this paragraph (d), S's attributes are reduced by S's attribute reduction amount. Paragraph (d)(3) of this section provides that S's attribute reduction amount is the lesser of the net stock loss and S's aggregate inside loss. The net stock loss is the excess of the $200 aggregate bases of the transferred shares over the $100 aggregate value of the transferred shares, or $100. S's aggregate inside loss is the excess of its $220 net inside attribute amount (the sum of the $100 basis in the land and the $120 loss carryover) over the $100 value of all outstanding S shares, or $120. The attribute reduction amount is therefore the lesser of the $100 net stock loss and the $120 aggregate inside loss, or $100. Under paragraph (d)(4) of this section, S's $100 attribute reduction amount is allocated and applied to reduce S's $120 loss carryover to $20. Under paragraph (d)(4)(iii) of this section, the reduction of the loss carryover is not a noncapital, nondeductible expense and has no effect on M's basis in the S stock.

(ii) *Transfer of less than all S shares.* (A) *Facts.* The facts are the same as in paragraph (i)(A) of this Example 1, except that M only sells 20 S shares to X. M's sale of the 20 S shares is a transfer of loss shares and therefore subject to this section. See paragraph (f)(10)(i)(A) and (f)(10)(i)(C) of this section. (There is no transfer of the remaining shares because S and M remain members of the same group.)

(B) *Application of paragraphs (b) and (c) of this section.* No adjustment is required under paragraph (b) or paragraph (c) of this section for the reasons set forth in paragraph (i)(B) of this Example 1. Thus, after the application of paragraph (c) of this section, M's transfer of the S shares is still a transfer of loss shares and, accordingly, subject to this paragraph (d).

(C) *Attribute reduction under this paragraph (d).* Under this paragraph (d), S's attributes are reduced by S's attribute reduction amount. Paragraph (d)(3) of this section provides that S's attribute reduction amount is the lesser of the net stock loss and S's aggregate inside loss. The net stock loss is $20, the excess of the $40 aggregate bases of the transferred shares over the $20 aggregate value of the transferred shares. S's aggregate inside loss is $120, the excess of its $220 net inside attribute amount (the sum of the $100 basis in the land and the $120 loss carryover) over the $100 value of all outstanding S shares. The attribute reduction amount is therefore $20, the lesser of the $20 net stock loss and the $120 aggregate inside loss. Under paragraph (d)(4) of this section, S's $20 attribute reduction amount is allocated and applied to reduce S's $120 loss carryover to $100.

*Example 2. Proportionate allocation of attribute reduction amount.* (i) *Facts.* M owns the sole outstanding share of S stock with a basis of $150. S owns land with a basis of $60, a factory with a basis of $30, publicly traded property with a basis of $30 and goodwill with a basis of $30. M sells its S share for $90. M's sale of the S share is a transfer of a loss share and therefore subject to this section. See paragraphs (f)(10)(i)(A), (f)(10)(i)(B), and (f)(10)(i)(C) of this section.

(ii) *Application of paragraphs (b) and (c) of this section.* Although the transfer is subject to this section, there is no basis redetermination under paragraph (b) of this section because there is only one share of S stock outstanding (and so there can be no disparity among members' bases in common shares and there are no outstanding preferred shares with respect to which there can be unrecognized gain or loss). See paragraph (b)(1)(ii)(A) of this section. Therefore, after the application of paragraph (b) of this section, the share is still a loss share and, as such, subject to paragraph (c) of this section. No adjustment is required under paragraph (c) of this section because both the disconformity amount and the net positive adjustment are $0. See paragraph (c)(3) of this section. Thus, after the application of paragraph (c) of this section, M's sale of the S share is still a transfer of a loss share and, accordingly, subject to this paragraph (d).

(iii) *Attribute reduction under this paragraph (d).* Under paragraph (d)(3) of this section, S's attribute reduction amount is determined to be $60, the lesser of the $60 net stock loss ($150 basis over $90 value) and S's $60 aggregate inside loss (the excess of S's $150 net inside attribute amount (the $60 basis of the land, plus the $30 basis of the factory, plus the $30 basis of the publicly traded property, plus the $30 basis of the goodwill) over the $90 value of the S share). Under paragraph (d)(4)(ii)(B)(*2*) of this section, the $60 attribute reduction amount is allocated and applied to reduce S's bases in its Category D assets, S's only attributes available for reduction, as follows:

| Available attributes, basis in Category D assets | Attribute amount | Allocable portion of attribute reduction amount | Adjusted attribute amount |
|---|---|---|---|
| Class VII, Goodwill | $30 | $30 | $0 |
| Class V: | | | |
| Land | 60 | (60/90 × 60) 40 | 20 |
| Factory | 30 | (30/90 × 60) 20 | 10 |
| Total Class V | 90 | 60 | 30 |
| Class II, publicly traded property | 30 | 0 | 30 |

| Available attributes, basis in Category D assets | Attribute amount | Allocable portion of attribute reduction amount | Adjusted attribute amount |
|---|---|---|---|
| Totals | 150 | 60 | 90 |

*Example 3. Attribute reduction amount less than total attributes in Category A, Category B, and Category C.* (i) *No election to prescribe the allocation of S's attribute reduction amount.* (A) *Facts.* P owns the sole outstanding share of M stock with a basis of $1,000 and M owns the sole outstanding share of S stock with a basis of $210. M sells its S share to X for $100. M's sale of the S share is a transfer of a loss share and therefore subject to this section. See paragraphs (f)(10)(i)(A), (f)(10)(i)(B), and (f)(10)(i)(C) of this section. At the time of the sale, S has no liabilities and the following attributes:

| Category | Attribute | Attribute amount |
|---|---|---|
| Category A | Capital loss carryover | $10 |
| Category B | NOL carryover | 200 |
| Category C | Deferred deductions | 40 |
| Category D, Class V | Basis in Land | 50 |
| Total Attributes | | 300 |

(B) *Application of paragraphs (b) and (c) of this section.* Although the transfer is subject to this section, there is no basis redetermination under paragraph (b) of this section because there is only one share of S stock outstanding (and so there can be no disparity among members' bases in common shares and there are no outstanding preferred shares with respect to which there can be unrecognized gain or loss). See paragraph (b)(1)(ii)(A) of this section. Therefore, after the application of paragraph (b) of this section, the share is still a loss share and, as such, subject to paragraph (c) of this section. No adjustment is required under paragraph (c) of this section because both the disconformity amount and the net positive adjustment are $0. See paragraph (c)(3) of this section. Thus, after the application of paragraph (c) of this section, M's transfer of the S share is still a transfer of a loss share and, accordingly, subject to this paragraph (d).

(C) *Attribute reduction under this paragraph (d).* (*1*) *Computation of attribute reduction amount.* Under paragraph (d)(3) of this section, S's attribute reduction amount is the lesser of the $110 net stock loss ($210 basis over $100 value) and S's aggregate inside loss. S's aggregate inside loss is $200 (S's $300 net inside attribute amount (the $10 capital loss carryover, plus the $200 NOL carryover, plus the $40 deferred deductions, plus the $50 basis in land) less the $100 value of all outstanding S shares). Thus, the attribute reduction amount is $110, the lesser of the $110 net stock loss and S's $200 aggregate inside loss. Under paragraph (d)(4)(ii)(A)(*1*) of this section, the $110 attribute reduction amount is allocated and applied to reduce S's attributes as follows:

| Category | Attribute | Attribute amount | Allocation of attribute reduction amount | Adjusted attribute amount |
|---|---|---|---|---|
| Category A | Capital loss carryover | $10 | $10 | $0 |
| Category B | NOL carryover | 200 | 100 | 100 |
| Category C | Deferred deductions | 40 | 0 | 40 |
| Category D, Class V | Basis in land | 50 | 0 | 50 |
| Totals | | 300 | 110 | 190 |

(ii) *Election to prescribe the allocation of attribute reduction amount.* (A) *Facts.* The facts are the same as in paragraph (i)(A) of this *Example 3,* except that P elects to allocate the attribute reduction amount to eliminate the Category C attributes, preserve the capital loss carryover, and reduce Category B attributes.

(B) *Application of paragraphs (b) and (c) of this section.* No adjustment is required under paragraph (b) or paragraph (c) of this section for the reasons set forth in paragraph (i)(B) of this *Example 3.* Thus, after the application of paragraph (c) of this section, M's sale of the S share is still a transfer of a loss share, and accordingly, subject to this paragraph (d).

(C) *Attribute reduction under this paragraph (d).* For the reasons set forth in paragraph (i)(C) of this *Example 3,* under this paragraph (d)(3), S's attribute reduction amount is determined to be $110. M elects to apply S's $110 attribute reduction amount as follows:

| Category | Attribute | Attribute amount | Allocation of attribute reduction amount | Adjusted attribute amount |
|---|---|---|---|---|
| Category A | Capital loss carryover | $10 | $0 | $10 |
| Category B | NOL carryover | 200 | 70 | 130 |
| Category C | Deferred deductions | 40 | 40 | 0 |
| Category D, Class V | Basis of land | 50 | 0 | 50 |
| Totals | | 300 | 110 | 190 |

*Example 4. Attributes attributable to liability not taken into account.* (i) *S operates one business.* (A) *Facts.* On January 1, year 1, M forms S by exchanging $150 for the sole outstanding share of S stock. In year 1, S earns $500, purchases land for $50, spends $100 to build a factory on that land, and then purchases publicly traded property for $250. In year 2, S earns a section 38 general business credit of $50. However, pollution generated by S's business gives rise to an environmental remediation liability under Federal law that would be required to be capitalized if a person purchased S's assets and assumed the liability. Before any amounts have been taken into account with respect to the environmental remediation liability, when the liability has a present value of $500, M sells its S share to X for $150. After giving effect to all other provisions of law, M's basis in the S share is $650 (the original basis of $150 increased under § 1.1502–32 by $500 for the income earned). The sale is therefore a transfer of a loss share of subsidiary stock and subject to this section. See paragraphs (f)(10)(i)(A), (f)(10)(i)(B), and (f)(10)(i)(C) of this section.

(B) *Application of paragraphs (b) and (c) of this section.* Although the transfer is subject to this section, there is no basis redetermination under paragraph (b) of this section because there is only one share of S stock outstanding (and so there can be no disparity among members' bases in common shares and there are no outstanding preferred shares with respect to which there can be unrecognized gain or loss). See paragraph (b)(1)(ii)(A) of this section. Therefore, after the application of paragraph (b) of this section, the share is still a loss share and, as such, subject to paragraph (c) of this section. No adjustment to basis is made under paragraph (c) of this section because, although the net positive adjustment is $500, the disconformity amount is $0. See paragraph (c)(3) of this section. Thus, after the application of paragraph (c) of this section, M's sale of the S share is still a transfer of a loss share and, accordingly, subject to this paragraph (d).

(C) *Attribute reduction under this paragraph (d).* (1) Under paragraph (d)(3) of this section, S's attribute reduction amount is the lesser of the $500 net stock loss ($650 basis over $150 value) and the aggregate inside loss. The aggregate inside loss is $500, computed as the excess of S's $650 net inside attribute amount (the sum of S's $100 basis in the factory, $50 basis in the land, $250 basis in the publicly traded property, and $250 cash remaining after the purchases) over the $150 value of the S share. Thus, S's attribute reduction amount is $500, the lesser of the $500 net stock loss and the $500 aggregate inside loss. Under paragraph (d)(4)(ii)(B)(*2*) of this section, S's $500 attribute reduction amount is allocated and applied to reduce S's attributes as follows:

| Available attributes | Attribute amount | Allocable portion of attribute reduction amount | Adjusted attribute amount |
|---|---|---|---|
| Category D: | | | |
| Class V Assets: | | | |
| Basis of factory | $100 | $100 | $0 |
| Basis of land | 50 | 50 | 0 |
| Class II Assets: | | | |
| Publicly traded property | 250 | 250 | 0 |

(2) The remaining $100 attribute reduction amount is not applied to S's $250 cash (Class I asset) or to S's $50 general business tax credit. Under the general rule of this paragraph (d), that remaining $100 attribute reduction amount would have no further effect on S's attributes. However, S has a $500 liability that has not been taken into account. Therefore, under paragraph (d)(4)(ii)(C)(*1*) of this section, the remaining $100 attribute reduction amount is suspended and will be allocated and applied to reduce any amounts that become deductible or capitalizable as a result of the environmental remediation liability later being taken into account. If the liability is satisfied for an amount that is less than $100, under paragraph (d)(4)(ii)(C)(*2*) of this section the remaining portion of that $100 suspended attribute reduction amount is disregarded and has no further effect.

(ii) *Lower-tier subsidiary with additional liability.* (A) *Facts.* The facts are the same as in paragraph (i)(A) of *Example 4,* except that, in addition, S exchanged $50 for the sole outstanding share of stock of S1. S1 has $50 and equipment with an aggregate basis of $0. S1 also has employee medical expense liabilities that have not been taken into account and that would be required to be capitalized if a person purchased S1's assets and assumed the liabilities. At the time of the sale, S's environmental remediation liability had a present value of $475 and S1's employee medical expenses had a present value of $25. For the reasons set forth in paragraph (i)(A) of this *Example 4,* M's sale of the S share is a transfer of a loss share and therefore subject to this section.

(B) *Application of paragraphs (b) and (c) of this section.* No adjustment is made under paragraph (b) or paragraph (c) of this section for the reasons set forth in paragraph (i)(B) of this *Example 4.* Thus, after the application of paragraph (c) of this section, M's sale of the S share is still a transfer of a loss share and, accordingly, subject to this paragraph (d).

(C) *Attribute reduction under this paragraph (d).* (1) *Computation of attribute reduction amount.* Under paragraph (d)(3) of this section, S's attribute reduction amount is the lesser of the $500 net stock loss ($650 basis over $150 value) and the aggregate inside loss. The aggregate inside loss is the excess of S's net inside attribute amount over the value of the S share. Under paragraphs (d)(3)(iii)(B) and (d)(5)(i)(B) of this section, S's net inside attribute amount is determined by using S's $50 deemed basis in the S1 share (the greater of S's $50 actual basis in the share and S1's $50 net inside attribute amount). Accordingly, S's net inside attribute amount is $650 (the sum of its $100 basis in the factory, $50 basis in the land, $250 basis in the publicly traded property, $200 cash, and $50 deemed basis in its S1 share). The aggregate inside loss is $500, the excess of S's $650 net inside attribute amount over the $150 value of the S share. Thus, S's attribute reduction amount is $500, the lesser of the $500 net stock loss and S's $500 aggregate inside loss.

(*2*) *Allocation, apportionment, and application of attribute reduction amount.* Under paragraphs (d)(4) and (d)(5)(ii) of this section, S's $500 attribute reduction amount is allocated proportionately (by basis) between its S1 share and its non-stock Category D asset (consisting of all S's Category D assets other than its share of S1 stock, with a basis equal to $600, the aggregate basis of S's non-stock assets). However, under paragraph (d)(5)(ii) of this section, for purposes of allocating S's attribute reduction amount between its non-stock Category D asset and the S1 share, S's $50 deemed basis in its S1 share is treated as reduced by S1's $25 net non-loss assets (its Class I asset, $50 cash over S1's liabilities (which, for this purpose include the $25 of employee medical expense liabilities not taken into account as of the transfer)). As a result, S's attribute reduction amount is allocated $480 ($600/625 × 500) to S's non-stock Category D asset and $20 ($25/625 × 500) to the S1 share. The $480 attribute reduction amount allocated to S's non-stock Category D asset produces the same reduction in the bases of S's assets (other than the S1 stock) as in paragraph (i)(C) of this *Example 4;* in addition, the $80 attribute reduction amount not applied to reduce S's attributes is suspended and applied to reduce any amounts that become deductible or capitalizable as a result of the environmental remediation liability later being taken into account. If the liability is satisfied for an amount that is less than $80, under paragraph (d)(4)(ii)(C)(*2*) of this section the remaining portion of that $80 suspended attribute reduction amount is disregarded and has no further effect. Because the S1 share is not transferred within the meaning of paragraph (f)(10) of this section, the allocated attribute reduction amount apportioned to the S1 share is applied fully to reduce the basis of the S1 share to $30. See paragraph (d)(5)(iii) of this section.

(D) *Tier down of S's attribute reduction amount.* The $20 portion of S's attribute reduction amount allocated to the S1 share is an attribute reduction amount of S1. Because S1 holds only cash, it has no attributes available for reduction under this paragraph (d). However, because S1 has a $25 liability not taken into account for tax purposes, paragraph (d)(4)(ii)(C)(*1*) of this section requires that $20 of the unapplied attribute reduction amount be suspended and then allocated and applied to reduce any amounts that become deductible or capitalizable as a result of the employee medical expense liabilities later being taken into account. If these liabilities are satisfied for an amount that is less than $20, under paragraph (d)(4)(ii)(C)(*2*) of this section the remaining portion of that $20 suspended attribute reduction amount is disregarded and has no further effect.

*Example 5. Wholly owned lower-tier subsidiary (no lower-tier transfer).* (i) *Application of conforming limitation.* (A) *Facts.* M owns the sole outstanding share of S stock with a basis of $250. S owns Asset with a basis of $100 and the only two outstanding shares of S1 stock (Share A has a basis of $40 and Share B has a basis of $60). S1 owns Asset 1 with a basis of $50. M sells its S share to P1, the common parent of another consolidated group, for $50. The sale is a transfer of a loss share and therefore subject to this section. See paragraphs (f)(10)(i)(A), (f)(10)(i)(B), and (f)(10)(i)(C) of this section.

(B) *Application of paragraphs (b) and (c) of this section.* Although the transfer is subject to this section, there is no basis redetermination under paragraph (b) of this section because there is only one share of S stock outstanding (and so there can be no disparity among members' bases in common shares and there are no outstanding preferred shares with respect to which there can be unrecognized gain or loss). See paragraph (b)(1)(ii)(A) of this section. Therefore, after the application of paragraph (b) of this section, the share is still a loss share and, as such, subject to paragraph (c) of this section. No adjustment is required under paragraph (c) of this section because, although there is a $50 disconformity amount, the net positive adjustment is $0. See paragraph (c)(3) of this section. Thus, after the application of paragraph (c) of this section, M's sale of the S share is still a transfer of a loss share and, accordingly, subject to this paragraph (d).

(C) *Attribute reduction under this paragraph (d).* (*1*) *Computation of attribute reduction amount.* Under paragraph (d)(3) of this section, S's attribute reduction amount is the lesser of M's net stock loss and S's aggregate inside loss. M's net stock loss is $200 ($250 basis over $50 value). S's aggregate inside loss is the excess of S's net inside attribute amount over the value of the S share. Under paragraphs (d)(3)(iii)(B) and (d)(5)(i)(B) of this section, S's net inside attribute amount is $200, computed as the sum of S's $100 basis in Asset and its $100 deemed basis in the deemed single share of S1 stock (computed as the greater of S's $100 aggregate basis in the S1 shares and S1's $50 basis in Asset 1). S's aggregate inside loss is therefore $150, $200 net inside attribute amount over the $50 value of the S share. Accordingly, S's attribute reduction amount is $150, the lesser of the $200 net stock loss and the $150 aggregate inside loss.

(*2*) *Allocation, apportionment, and application of S's attribute reduction amount.* Under paragraphs (d)(4) and (d)(5)(ii) of this section, S's $150 attribute reduction amount is allocated proportionately (by basis) between Asset (non-stock Category D asset) with a basis of $100, and the S1 stock (treated as a single share with a deemed basis of $100). Accordingly, $75 of the attribute reduction amount ($100/$200 × $150) is allocated to Asset and $75 of the attribute reduction amount ($100/$200 × $150) is allocated to the S1 stock. The $75 of the attribute reduction amount allocated to Asset is applied to reduce S's basis in Asset from $100 to $25. The $75 of the attribute reduction amount allocated to the S1 stock is first apportioned between the shares in a manner that reduces disparity to the greatest extent possible. Thus, of the total $75 allocated to the S1 stock, $27.50 is apportioned to Share A and $47.50 is apportioned to Share B. Because neither of the S1 shares is transferred within the meaning of paragraph (f)(10) of this section, the allocated attribute reduction amount apportioned to each of the individual S1 shares is applied fully to reduce the basis of each share to $12.50. See paragraph (d)(5)(iii) of this section. As a result, immediately after the allocation, apportionment, and application of S's attribute reduction amount, S's basis in Asset is $25 and S's basis in each of the S1 shares is $12.50.

(*3*) *Tier down of S's attribute reduction amount, application of conforming limitation.* Under paragraph (d)(5)(v)(A) of this section, the $75 portion of S's attribute reduction amount allocated to the S1 stock is an attribute reduction amount of S1 (regardless of the extent, if any, to which it is apportioned and applied to reduce the basis of any shares of S1 stock). Under the general rules of this paragraph (d), the $75 tier-down attribute reduction amount would be allocated and applied to reduce S1's basis in Asset 1 from $50 to $0. However, under paragraph (d)(5)(v)(B) of this section, S1's attributes can be reduced by only $25, the excess of the $50 portion of S1's net inside attribute amount that is allocable to all S1 shares held by members as of the transaction over $25, the aggregate amount of members' bases in nontransferred S1 shares after reduction under this paragraph (d). Thus, of S1's $75 tier-down attribute reduction amount, only $25 is applied to reduce S1's basis in Asset 1, from $50 to $25. The $50 unapplied portion of the tier-down attribute reduction amount subject to the conforming limitation has no further effect.

(ii) *Application of basis restoration rule.* (A) *Facts.* The facts are the same as in paragraph (i)(A) of this *Example 5,* except that S's basis in Share A is $15 and S's basis in Share B is $35, and S1's basis in Asset 1 is $100.

(B) *Basis redetermination and basis reduction under paragraphs (b) and (c) of this section.* No adjustment is required under paragraph (b) or paragraph (c) of this section for the reasons set forth in paragraph (i)(B) of this *Example 5.* Thus, after the application of paragraph (c) of this section, M's transfer of the S share is still a transfer of a loss share and, accordingly, subject to this paragraph (d).

(C) *Attribute reduction under this paragraph (d).* (*1*) *Computation of attribute reduction amount.* Under paragraph (d)(3) of this section, S's attribute reduction amount is the lesser of M's net stock loss and S's aggregate inside loss. M's net stock loss is $200 ($250 basis over $50 value). S's aggregate inside loss is the excess of S's net inside attribute amount over the value of the S share. Under paragraphs (d)(3)(iii)(B) and (d)(5)(i)(B) of this section, S's net inside attribute amount is $200, the sum of S's $100 basis in Asset and its $100 deemed basis in the deemed single share of S1 stock (computed as the greater of S's $50 aggregate basis in the S1 shares and S1's $100 basis in Asset 1). S's aggregate inside loss is therefore $150, $200 net inside attribute amount over the $50 value of the S share. Accordingly, S's attribute reduction amount is $150, the lesser of the $200 net stock loss and the $150 aggregate inside loss.

(*2*) *Allocation, apportionment, and application of S's attribute reduction amount.* Under paragraphs (d)(4) and (d)(5)(ii) of this section, S's $150 attribute reduction amount is allocated proportionately (by basis) between Asset (non-stock Category D asset) with a basis of $100, and the S1 stock (treated as a single share with a deemed basis of $100). Accordingly, $75 of the attribute reduction amount ($100/$200 × $150) is allocated to Asset and $75 of the attribute reduction amount ($100/$200 × $150) is allocated to the S1 stock. The $75 of the attribute reduction amount allocated to Asset is applied to reduce S's basis in Asset from $100 to $25. The $75 of the attribute reduction amount allocated to the S1 stock is first apportioned between the shares in a manner that reduces disparity to the greatest extent possible. Thus, of the total $75 allocated to the S1 stock, $27.50 is apportioned to Share A and $47.50 is apportioned to Share B. Because neither of the S1 shares is transferred within the meaning of paragraph (f)(10) of this section, the allocated attribute reduction amount apportioned to each of the individual S1 shares is applied fully to reduce the basis of each share to an excess loss account of $12.50. See paragraph (d)(5)(iii) of this section. As a result, immediately after the allocation, apportionment, and application of S's attribute reduction amount, S's basis in Asset is $25 and S's basis in each of the S1 shares is an excess loss account of $12.50.

(*3*) *Tier down of S's attribute reduction amount.* Under paragraph (d)(5)(v)(A) of this section, the $75 portion of S's attribute reduction amount allocated to S1 stock is an attribute reduction amount of S1 (regardless of the extent, if any, to which it is apportioned and applied to reduce the basis of any shares of S1 stock). Accordingly, under the general rules of this paragraph (d), the $75 tier-down attribute reduction amount is applied to reduce S1's basis in Asset 1 from $100 to $25.

(*4*) *Basis restoration.* Under paragraph (d)(5)(vi)(A) of this section, after this

paragraph (d) has been applied with respect to all transfers of subsidiary stock, any reduction made to the basis of a share of lower-tier subsidiary stock under paragraph (d)(5)(iii) of this section is reversed to the extent necessary to conform the basis of that share to the share's allocable portion of the subsidiary's net inside attribute amount (after reduction). S1's net inside attribute amount after the application of this paragraph (d) is $25 and thus each of the two S1 share's allocable portion of S1's net inside attribute amount is $12.50. Accordingly, the reductions to Share A and to Share B under paragraph (d)(5)(iii) of this section are reversed to the extent necessary to restore the basis of each share to $12.50. Thus, $25 of the $27.50 of reduction to the basis of Share A, and $25 of the $47.50 of reduction to the basis of share B, is reversed, restoring the basis of each share to $12.50.

*Example 6. Multiple blocks of lower-tier subsidiary stock outstanding.* (i) *Excess loss account taken into account (transfer of upper-tier share causes disposition within the meaning of § 1.1502–19(c)(1)(ii)(B)).* (A) *Facts.* M owns the sole outstanding share of S stock with a basis of $200. S holds all five outstanding shares of S1 common stock (Shares A, B, C, D, and E). S has an excess loss account of $20 in Share A and a positive basis of $20 in each of the other shares. The only investment adjustment applied to any S1 share was a negative $20 investment adjustment applied to Share A when it was the only outstanding share, and this amount tiered up and adjusted M's basis in the S share. S1 owns one asset with a basis of $250. M sells its S share to P1, the common parent of a consolidated group, for $20. The sale of the S share is a disposition of Share A under § 1.1502–19(c)(1)(ii)(B) (S1 becomes a nonmember because it will have a separate return year as a member of the P1 group). Accordingly, under § 1.1502–19(b)(1)(i) and paragraph (a)(3)(i) of this section, before the application of this section, S's excess loss account in Share A is taken into account, increasing S's basis in Share A to $0 and M's basis in its S share to $220. After giving effect to the recognition of the excess loss account, M's sale of the S share is a transfer of a loss share and therefore subject to this section. See paragraphs (f)(10)(i)(A), (f)(10)(i)(B), and (f)(10)(i)(C) of this section.

(B) *Basis redetermination and basis reduction under paragraphs (b) and (c) of this section.* Although the transfer is subject to this section, there is no basis redetermination under paragraph (b) of this section because there is only one share of S stock outstanding (and so there can be no disparity among members' bases in common shares and there are no outstanding preferred shares with respect to which there can be unrecognized gain or loss). See paragraph (b)(1)(ii)(A) of this section. Therefore, after the application of paragraph (b) of this section, the share is still a loss share and, as such, subject to paragraph (c) of this section. No adjustment is made under paragraph (c) of this section because, even though there is a disconformity amount of $140, the net positive adjustment is $0. See paragraph (c)(3) of this section. Thus, after the application of paragraph (c) of this section, M's sale of the S share remains a transfer of a loss share and, accordingly, subject to this paragraph (d).

(C) *Attribute reduction under this paragraph (d).* (*1*) *Computation of attribute reduction amount.* Under paragraph (d)(3) of this section, S's attribute reduction amount is the lesser of M's net stock loss and S's aggregate inside loss. M's net stock loss is $200 ($220 basis over $20 value). S's aggregate inside loss is the excess of S's net inside attribute amount over the value of the S share. Under paragraphs (d)(3)(iii)(B) and (d)(5)(i)(B) of this section, S's net inside attribute amount is $250, S's $250 deemed basis in the deemed single share of S1 stock (computed as the greater of S's $80 aggregate basis in the S1 shares ($0 basis in Share A plus $20 basis in each of the four other shares) and S1's $250 basis in its asset). S's aggregate inside loss is therefore $230, $250 net inside attribute amount over the $20 value of the S share. Accordingly, S's attribute reduction amount is $200, the lesser of the $200 net stock loss and the $230 aggregate inside loss.

(*2*) *Allocation, apportionment, and application of S's attribute reduction amount.* Under paragraphs (d)(4) and (d)(5)(ii) of this section, S's $200 attribute reduction amount is allocated entirely to the S1 stock (treated as a single share) and then apportioned among the shares in a manner that reduces disparity to the greatest extent possible. Thus, $24 is apportioned to Share A and $44 is apportioned to each of the other shares. Because none of the S1 shares are transferred within the meaning of paragraph (f)(10) of this section (notwithstanding that there is a disposition under § 1.1502–19(c)(1)(ii)(B)), the allocated attribute reduction amount apportioned to each of the individual S1 shares is applied fully to reduce the basis of each share to an excess loss account of $24. See paragraph (d)(5)(iii) of this section.

(*3*) *Tier down of S's attribute reduction amount.* Under paragraph (d)(5)(v)(A) of this section, the $200 of S's attribute reduction amount allocated to the S1 shares is an attribute reduction amount of S1 (regardless of the extent, if any, to which it is apportioned and applied to reduce the basis of any shares of S1 stock). Under the general rules of this paragraph (d), S1's $200 tier-down attribute reduction amount is allocated and applied to reduce S1's basis in its asset from $250 to $50.

(*4*) *Basis restoration.* Under paragraph (d)(5)(vi)(A) of this section, after this paragraph (d) has been applied with respect to all transfers of subsidiary stock, any reduction made to the basis of a share of lower-tier subsidiary stock under paragraph (d)(5)(iii) of this section is reversed to the extent necessary to conform the basis of that share to the share's allocable portion of the subsidiary's net inside attribute amount (after reduction). S1's net inside attribute amount after the application of this paragraph (d) is $50 and thus each of the five S1 share's allocable portion of S1's net inside attribute amount is $10. Accordingly, the reductions to the bases of S1 shares under paragraph (d)(5)(iii) of this section are reversed to the extent necessary to restore (to the extent possible) the basis of each share to $10. Thus, $24 of the $24 of reduction to the basis of Share A is reversed, restoring the basis of Share A to $0, and $34 of the $44 of reduction to the basis of each other share is reversed, restoring the basis of each of those shares to $10.

(ii) *Sale of gain share to member.* (A) *Facts.* The facts are the same as in paragraph (i)(A) of this *Example 6,* except that M owns Shares A, B, C, and D, S owns Share E, S has a liability of $20, and S1's basis in its asset is $500. Also, as part of the transaction, S sells Share E to M for $40. Unlike under the facts of paragraph (i)(A) of this *Example 6,* there is no disposition of Share A within the meaning of § 1.1502–19(c)(1)(ii)(B) (S1 continues to be a member of the group, and thus does not have a separate return year). As a result, the Share A excess loss account is not taken into account. Although S's sale of Share E is a transfer of that share, the share is not a loss share and thus the transfer is not subject to this section. M's sale of the S share, however, is a transfer of a loss share and therefore subject to this section. See paragraphs (f)(10)(i)(A), (f)(10)(i)(B), and (f)(10)(i)(C) of this section.

(B) *Transfer in lowest tier (gain share).* S's sale of Share E is the lowest-tier transfer in the transaction. Under paragraph (a)(3)(ii)(A) of this section, because there are no transfers of loss shares at that tier, no adjustments are required under paragraph (b) or (c) of this section. However, S's gain recognized on the transfer Share E is computed and immediately adjusts members bases in subsidiary stock under § 1.1502–32 (because M and S are not members of the same group immediately after the transaction the sale is not an intercompany transaction subject to § 1.1502–13). Accordingly, M's basis in its S share is increased by $20, from $200 to $220.

(C) *Transfers in next higher tier, application of paragraphs (b) and (c) of this section.* The next higher tier transfer is M's sale of the S stock. The sale is a transfer of a loss share and therefore subject to this section. Although the transfer is subject to this section, there is no basis redetermination under paragraph (b) of this section because there is only one share of S stock outstanding (and so there can be no disparity among members' bases in common shares and there are no outstanding preferred shares with respect to which there can be unrecognized gain or loss). See paragraph (b)(1)(ii)(A) of this section. Therefore, after the application of paragraph (b) of this section, the share is still a loss share and, as such, subject to paragraph (c) of this section. Under paragraph (c) of this section, M's basis in its S share is decreased by $20, the lesser of S's $200 disconformity amount (computed as the excess of M's $220 basis in the S stock over S's $20 net inside attribute amount (computed as the $20 basis in Share E, increased by $20 to reflect the gain recognized with respect to the share, less the $20 liability)), and the $20 net positive adjustment. Thus, after the application of paragraph (c) of this section, M's basis in the S share is $200, and the sale remains a transfer of a loss share. There are no higher tier transfers and, therefore, M's transfer of the S share is then subject to this paragraph (d).

(D) *Attribute reduction under this paragraph (d).* (*1*) *Computation of attribute reduction amount.* Under paragraph (d)(3) of this section, S's attribute reduction amount is the lesser of M's net stock loss and S's aggregate inside loss. M's net stock loss is $180 ($200 basis over $20 value). S's aggregate inside loss is the excess of S's net inside attribute amount over the value of the S share. Under paragraphs (d)(3)(iii)(B) and (d)(5)(i)(B) of this section, S's net inside attribute amount is $80, computed as $100 (S's deemed basis in Share E (the greater of $40 (S's $20 basis in Share E, adjusted for the $20 gain recognized with respect to the share), and Share E's allocable portion of S1's net inside attribute amount of $100 (1/5 of S1's $500 basis in its asset)), less S's $20 liability. Accordingly, S's aggregate inside loss is $60 ($80 net inside attribute amount over the $20 value of the S stock). S's attribute reduction amount is therefore $60, the lesser of $180 net stock loss and $60 aggregate inside loss.

(*2*) *Allocation, apportionment, and application of S's attribute reduction amount.* Under paragraphs (d)(4) and (d)(5)(ii) of this section, S's $60 attribute reduction amount is allocated entirely to its S1 stock, Share E. However, because Share E was transferred within the meaning of paragraph (f)(10) of this section and gain was recognized on its transfer, none of the allocated amount is apportioned to, or applied to reduce the basis of Share E. See paragraph (d)(5)(iii)(A) of this section. Under paragraph (d)(5)(iv) of this section, the $60 allocated attribute reduction amount not apportioned or applied to Share E has no effect on S or S's attributes.

(*3*) *Tier down of S's attribute reduction amount.* Notwithstanding the fact that no portion of the allocated attribute reduction amount was apportioned to or applied to reduce the basis of Share E, the entire $60 allocated attribute reduction amount is an attribute reduction amount of S1. See paragraphs (d)(5)(v)(A) of this section. Under the general rules of this paragraph (d), S1's $60 tier-down attribute reduction amount is allocated and applied to reduce S1's basis in its asset from $500 to $440.

(*4*) *Basis restoration.* Under paragraph (d)(5)(vi)(A) of this section, after this paragraph (d) has been applied with respect to all transfers of subsidiary stock, any reduction made to the basis of a share of subsidiary stock under paragraph (d)(5)(iii) of this section is reversed to the extent necessary to conform the basis of that share to the share's allocable portion of the subsidiary's net inside attribute amount. No reduction was made to the basis of the S1 stock under paragraph (d)(5)(iii) of this section. Therefore, no stock basis is increased under the basis restoration rule in paragraph (d)(5)(vi)(A) of this section.

*Example 7. Allocation of attribute reduction if lower-tier subsidiary has non-loss assets or liabilities.* (i) *S1 holds cash.* (A) *Facts.* M owns the sole outstanding share of S stock with a basis of $800. S owns Asset with a basis of $400 and the sole outstanding share of S1 stock with a basis of $300. S1 holds Asset 1 with a basis of $50, and $100 cash. M sells its S share to P1, the common parent of a consolidated group, for $100. The sale is not a transfer of the S1 share because S and S1 are members of the same group following the transaction. However, the sale is a transfer of the S share, a loss share, and therefore subject to this section. See paragraphs (f)(10)(i)(A), (f)(10)(i)(B), and (f)(10)(i)(C) of this section.

(B) *Application of paragraphs (b) and (c) of this section.* Although the transfer is subject to this section, there is no basis redetermination under paragraph (b) of this section because there is only one share of S stock outstanding (and so there can be no disparity among members' bases in common shares and there are no outstanding preferred shares with respect to which there can be unrecognized gain or loss). See paragraph (b)(1)(ii)(A) of this section. Therefore, after the application of paragraph (b) of this section, the share is still a loss share and, as such, subject to the provisions of this paragraph (c). No adjustment is required under paragraph (c) of this section because, even though there is a disconformity amount of $100, the net positive adjustment is $0. See paragraph (c)(3) of this section. Thus, after the application of paragraph (c) of this section, M's sale of the S share is still a transfer of a loss share and, accordingly, subject to this paragraph (d).

(C) *Attribute reduction under this paragraph (d).* (*1*) *Computation of attribute reduction amount.* Under paragraph (d)(3) of this section, S's attribute reduction amount is the lesser of M's net stock loss and S's aggregate inside loss. M's net stock loss is $700 ($800 basis over $100 value). S's aggregate inside loss is the excess of S's net inside attribute amount over the value of the S share. Under paragraphs (d)(3)(iii)(B) and (d)(5)(i)(B) of this section, S's net inside attribute amount is $700, the sum of its $400 basis in Asset and its $300 deemed basis in the S1 share (computed as the greater of S's $300 basis in the S1 share and S1's $150 net inside attribute amount (reflecting the sum of S1's $50 basis in Asset 1 and S1's $100 cash)). Therefore, S's aggregate inside loss is $600 ($700 net inside attribute amount over the $100 value of the S stock). S's attribute reduction amount is $600, the lesser of the $700 net stock loss and the $600 aggregate inside loss.

(*2*) *Allocation, apportionment, and application of S's attribute reduction amount.* Under paragraphs (d)(4) and (d)(5)(ii) of this section, S's $600 attribute reduction amount is allocated proportionately (by basis) between S's $400 basis in Asset (non-stock Category D asset) and its deemed basis in the S1 share. However, under paragraph (d)(5)(ii) of this section, for purposes of allocating the attribute reduction amount, S's $300 deemed basis in the S1 share is treated as reduced by S1's net non-loss assets (its Class I asset, $100 cash) to $200. Thus, the $600 is allocated $400 to Asset ($400/$600 × $600) and $200 to the S1 share ($200/$600 × $600). The $400 allocated to Asset is applied to reduce S's basis in Asset from $400 to $0. Because the S1 share is not transferred within the meaning of paragraph (f)(10) of this section, the allocated attribute reduction amount apportioned to the S1 share is applied fully to reduce the basis of the S1 share to $100. See paragraph (d)(5)(iii) of this section.

(*3*) *Tier down of S's attribute reduction amount.* Under paragraph (d)(5)(v)(A) of this section, the $200 portion of S's attribute reduction amount allocated to the S1 stock is an attribute reduction amount of S1 (regardless of the extent, if any, to which it is apportioned and applied to reduce the basis of any shares of S1 stock). Under the general rules of this paragraph (d), S1's $200 tier-down attribute reduction amount is allocated and applied to reduce S1's basis in Asset 1 (S1's only attribute available for reduction) from $50 to $0. The $150 unapplied attribute reduction amount is disregarded and has no further effect.

(*4*) *Basis restoration.* Under paragraph (d)(5)(vi)(A) of this section, after this paragraph (d) has been applied with respect to all transfers of subsidiary stock, any reduction made to the basis of a share of subsidiary stock under paragraph (d)(5)(iii) of this section is reversed to the extent necessary to conform the basis of that share to the share's allocable portion of the subsidiary's net inside attribute amount. There is only one share of S1 stock outstanding and so S1's entire $100 net inside attribute amount is allocable to that share. Because S's $100 basis in the S1 share (as reduced under this paragraph (d)) is already conformed with its $100 allocable portion of S1's net inside attribute amount, there is no restoration under paragraph (d)(5)(vi)(A) of this section.

(ii) *S1 borrows cash.* The facts are the same as in paragraph (i)(A) of this *Example 7* except that, in addition, S1 borrows $50 from X immediately before M sells the S share. The computation of the attribute reduction amount is the same as in paragraph (i)(C) of this *Example 7* (the $50 cash from the loan proceeds and the $50 liability offset in the computation of S1's net inside attribute amount and so the net amount is unaffected, and the computation of S's deemed basis in the S1 stock is unaffected). Similarly, for purposes of allocating the attribute reduction amount between the non-stock Category D asset and the S1 stock, paragraph (d)(5)(ii) of this section requires S's deemed basis in the S1 share to be treated as reduced by S1's net non-loss assets (S1's non-loss assets over S1's liabilities). Accordingly, the additional $50 cash proceeds is offset by the $50 liability and there is no effect on the allocation of the attribute reduction amount. The results are the same as in paragraph (i) of this *Example 7.*

(iii) *S1 has a liability not taken into account for tax purposes.* (A) *Facts.* The facts are the same as in paragraph (ii) of this *Example 7* except that, in addition, S1 has a $40 liability that is not taken into account for tax purposes as of the transfer and that would be required to be capitalized if a person purchased S1's assets and assumed the liability.

(B) *Application of paragraphs (b) and (c) of this section.* No adjustment is required under paragraph (b) or paragraph (c) of this section for the reasons set forth in paragraph (i)(B) of this *Example 7.* Thus, after the application of paragraph (c) of this section, P's sale of the S share is still a transfer of a

loss share and, accordingly, subject to this paragraph (d).

(C) *Attribute reduction under this paragraph (d).* (*1*) *Computation of attribute reduction amount.* The attribute reduction amount is the same as computed in paragraph (i)(C)(*1*) of this *Example 7* (under paragraph (f)(5) of this section, the term liability does not include liabilities not taken into account for tax purposes and so the additional $40 liability not yet taken into account for tax purposes does not affect the computation of S's attribute reduction amount).

(*2*) *Allocation, apportionment, and application of S's attribute reduction amount.* Under paragraphs (d)(4) and (d)(5)(ii) of this section, S's $600 attribute reduction amount is allocated proportionately (by basis) between S's $400 basis in Asset 1 (non-stock Category D asset) and its deemed basis in the S1 share. However, under paragraph (d)(5)(ii) of this section, for purposes of allocating the attribute reduction amount, S's $300 deemed basis in the S1 share is treated as reduced by S1's net non-loss assets (S1's non-loss assets over S1's liabilities). For this purpose, the term liabilities includes liabilities not taken into account for tax purposes, as described in paragraph (d)(4)(ii)(C)(*1*) of this section (generally, liabilities that, if assumed in a purchase, would give rise to a capitalized amount when satisfied). Thus, for this purpose, S's $300 deemed basis in the S1 share is reduced by S1's $60 net non-loss assets (the excess of S1's $150 non-loss assets (its Class I asset, $150 cash) over S1's $90 liabilities ($50 loan and $40 liability not yet taken into account for tax purposes)), to $240. Accordingly, S's $600 attribute reduction amount is allocated and applied $375 ($400/$640 × $600) to Asset (reducing S's basis in Asset from $400 to $25) and $225 ($240/$640 × $600) to the S1 share. Because the S1 share is not transferred within the meaning of paragraph (f)(10) of this section, the allocated attribute reduction amount apportioned to the S1 share is applied fully to reduce the basis of the S1 share to $75. See paragraph (d)(5)(iii) of this section.

(*3*) *Tier down of S's attribute reduction amount, application of conforming limitation.* Under paragraph (d)(5)(v)(A) of this section, the $225 portion of S's attribute reduction amount allocated to the S1 stock is an attribute reduction amount of S1 (regardless of the extent, if any, to which it is apportioned and applied to reduce the basis of any shares of S1 stock). Under the general rules of this paragraph (d), S1's $225 tier-down attribute reduction amount would be allocated and applied to reduce S1's attributes. However, under paragraph (d)(5)(v)(B) of this section, S1's attributes can be reduced by only $75, the excess of the $150 portion of S1's net inside attribute amount that is allocable to all S1 shares held by members as of the transaction over $75, the aggregate amount of members' bases in nontransferred S1 shares, after reduction under this paragraph (d). Thus, of S1's $225 tier-down attribute reduction amount, $50 is applied to reduce S1's basis in Asset 1, from $50 to $0. Although the $25 unapplied attribute reduction amount not subject to the conforming limitation would generally be disregarded without further effect, because S1 has a $40 liability not taken into account for tax purposes, paragraph (d)(4)(ii)(C)(*1*) of this section requires that the $25 of the unapplied attribute reduction amount not subject to the conforming limitation be suspended and then allocated and applied to reduce any amounts that become deductible or capitalizable as a result of that liability later being taken into account. If the liability is satisfied for an amount that is less than $25, under paragraph (d)(4)(ii)(C)(*2*) of this section the remaining portion of that $25 suspended attribute reduction amount is disregarded and has no further effect. The $150 unapplied portion of the tier-down attribute reduction amount subject to the conforming limitation has no further effect.

(*4*) *Basis restoration.* Under paragraph (d)(5)(vi)(A) of this section, after this paragraph (d) has been applied with respect to all transfers of subsidiary stock, any reduction made to the basis of a share of lower-tier subsidiary stock under paragraph (d)(5)(iii) of this section is reversed to the extent necessary to conform the basis of that share to the share's allocable portion of the subsidiary's net inside attribute amount. Paragraph (d)(5)(vi)(A) provides that, for this purpose, S1's net inside attribute amount is its net inside attribute amount, taking into account any reductions under this paragraph (d) and treating it as reduced by any attribute reduction amount suspended under paragraph (d)(4)(ii)(C)(*1*) of this section. Because S's $75 basis in its S1 stock (after application of this paragraph (d)) is already conformed with its $75 allocable portion of S1's net inside attribute amount ($100 net inside attributes after reduction, reduced by S1's $25 suspended attribute reduction amount), there is no restoration under paragraph (d)(5)(vi)(A) of this section.

*Example 8. Election to reduce stock basis or reattribute attributes under paragraph (d)(6) of this section.* (i) *Deconsolidating sale.* (A) *Facts.* P owns the sole outstanding share of M stock with a basis of $1,000. M owns all 100 outstanding shares of S stock with a basis of $2.10 per share ($210 total). M sells all its S shares to X for $1 per share ($100 total). M's sale of the S shares is a transfer of loss shares and therefore subject to this section. See paragraphs (f)(10)(i)(A), (f)(10)(i)(B), and (f)(10)(i)(C) of this section. At the time of the sale, S has no liabilities and the following:

| Category | Attribute | Attribute amount |
|---|---|---|
| Category A | Capital loss carryover | $10 |
| Category B | NOL carryover | 90 |
| Category C | Deferred deduction | 40 |
| Total Category A, Category B, and Category C Attributes | | 140 |
| Category D, Class V | Basis in land | 70 |
| Total Attributes | | 210 |

(B) *Application of paragraphs (b) and (c) of this section.* Although the transfer is subject to this section, there is no basis redetermination under paragraph (b) of this section because there is no disparity among M's bases in shares of S common stock and there are no shares of S preferred stock outstanding (so there can be no unrecognized gain or loss with respect to preferred shares). See paragraph (b)(1)(ii)(A) of this section. No adjustment is required under paragraph (c) of this section because both the disconformity amount and the net positive adjustment are $0. See paragraph (c)(3) of this section. Thus, after the application of paragraph (c) of this section, M's transfer of the S shares is still a transfer of loss shares and, accordingly, subject to this paragraph (d).

(C) *Attribute reduction under this paragraph (d).* (*1*) *Computation of attribute reduction amount.* Under paragraph (d)(3) of this section, S's attribute reduction amount is the lesser of the $110 net stock loss ($210 aggregate basis over the $100 aggregate value) and S's aggregate inside loss. S's aggregate inside loss is $110 (S's $210 net inside attribute amount (the $10 capital loss carryover, plus the $90 NOL carryover, plus the $40 deferred deduction, plus the $70 basis in the land) over the $100 value of all outstanding S shares). S's attribute reduction amount is $110, the lesser of the $110 net stock loss and the $110 aggregate inside loss.

(*2*) *Application of attribute reduction amount.* (i) S's $110 attribute reduction amount is applied as follows:

| Category | Attribute | Attribute amount | Allocation of attribute reduction amount | Adjusted attribute amount |
|---|---|---|---|---|
| Category A | Capital loss carryover | $10 | $10 | $0 |
| Category B | NOL carryover | 90 | 90 | 0 |
| Category C | Deferred deduction | 40 | 10 | 30 |
| Category D, Class V | Basis in land | 70 | 0 | 70 |
| Totals | | 210 | 110 | 100 |

(*ii*) Alternatively, under paragraph (d)(4)(ii)(A)(*1*) of this section, P could specify the allocation of S's $110 attribute reduction amount among S's $10 capital loss carryover, S's $90 NOL carryover, and S's $40 deferred deduction.

(D) *Results.* The P group recognizes a $110 loss on M's sale of the S shares that is absorbed by the group, which reduces P's basis in the M share under § 1.1502–32 from $1,000 to $890. Immediately after the transaction, the entities own the following:

| Entity | Asset | Basis |
|---|---|---|
| P | M share | $890 |
| X | 100 S shares | 100 |
| S | Category C, deferred deduction. | 30 |
| | Category D, Class V Asset (land). | 70 |

(E) *Election to reduce stock basis.* The facts are the same as in paragraph (i)(A) of this *Example 8* except that P elects under paragraph (d)(6) of this section to reduce M's basis in the S shares by the full attribute reduction amount of $110, in lieu of S reducing its attributes. The election is effective for all transferred loss shares and is allocated to those shares in proportion to the loss in each. See paragraph (d)(6)(v)(A) of this section. Accordingly, the basis of each of the 100 transferred shares is reduced from $2.10 to $1.00. After giving effect to the election, the S shares are not loss shares and this section has no further application to the transfer. The $110 reduction in M's basis in the S shares pursuant to the election under paragraph (d)(6) of this section is a noncapital, nondeductible expense of M that will reduce P's basis in the M share. See paragraph (d)(6)(v)(A) of this section. Immediately after the transaction, the entities own the following:

| Entity | Asset | Basis/ attribute |
|---|---|---|
| P | M share | $890 |
| X | 100 S shares | 100 |
| S | Category A, capital loss carryover | 10 |
| | Category B, NOL carryover | 90 |
| | Category C, deferred deduction | 40 |
| | Category D, Class V Asset (land) | 70 |

(F) *Election to reattribute losses.* The facts are the same as in paragraph (i)(A) of this *Example 8* except that P elects under paragraph (d)(6) of this section to reattribute S's attributes. S's attribute reduction amount is $110, and P can reattribute all or any portion of the attributes in Category A, Category B, and Category C to the extent of $110. P elects to reattribute the $90 NOL, and, as a result, S's NOL is $0. Under paragraph (d)(6)(iv)(A) of this section, the reattribution of the $90 NOL is a noncapital, nondeductible expense of S. Under § 1.1502–32(c)(1)(ii)(A)(1) this $90 expense is allocated to the transferred loss shares of S stock in proportion to the loss in the shares, or $.90 per share. Further, this expense tiers up under § 1.1502–32 and reduces P's basis in the M stock by $90. After giving effect to the election, the P group would recognize a $20 loss on M's sale of the S shares, S would have an aggregate inside loss of $20 (S's $120 net inside attribute amount (the $10 capital loss carryover, plus the $40 deferred deduction, plus the $70 basis in the land) over the $100 value of all outstanding S shares), and S's attribute reduction amount would be $20 (applied $10 to the $10 capital loss carryover and $10 to the $40 deferred deduction). (Alternatively, under paragraph (d)(4)(ii)(A)(*1*) of this section, P could specify the allocation of S's $20 attribute reduction amount between S's $10 capital loss carryover and S's $40 deferred deduction. Further, P could elect to reduce M's remaining basis in the S shares by any amount up to the $20 attribute reduction amount, thereby reducing or eliminating S's attribute reduction amount.)

(ii) *Nondeconsolidating sale.* (A) *Facts.* The facts are the same as in paragraph (i)(A) of this *Example 8*, except that M only sells 20 S shares ($20 total).

(B) *Application of paragraphs (b) and (c) of this section.* No adjustment is required under paragraph (b) or paragraph (c) of this section for the reasons set forth in paragraph (i)(B) of this *Example 8*. Thus, after the application of paragraph (c) of this section, M's sale of the S shares is still a transfer of loss shares and, accordingly, subject to this paragraph (d).

(C) *Attribute reduction under this paragraph (d).* (*1*) *Computation of attribute reduction amount.* Under paragraph (d)(3) of this section, S's attribute reduction amount is the lesser of the $22 net stock loss ($42 aggregate basis over $20 aggregate value) and S's $110 aggregate inside loss (as calculated in paragraph (i)(C)(*1*) of this *Example 8*). S's attribute reduction amount is $22, the lesser of the $22 net stock loss and the $110 aggregate inside loss.

(*2*) *Application of attribute reduction amount.* (i) S's $22 attribute reduction amount is applied as follows:

| Category | Attribute | Attribute amount | Allocation of attribute reduction amount | Adjusted attribute amount |
|---|---|---|---|---|
| Category A | Capital loss carryover | $10 | $10 | $0 |
| Category B | NOL carryover | 90 | 12 | 78 |
| Category C | Deferred deduction | 40 | 0 | 40 |
| Category D, Class V | Land | 70 | 0 | 70 |

(*ii*) Alternatively, under paragraph (d)(4)(ii)(A)(*1*) of this section, P could specify the allocation of S's $22 attribute reduction amount among S's $10 capital loss carryover, S's $90 NOL carryover, and S's $40 deferred deduction.

(D) *Results.* The P group recognizes a $22 loss on M's sale of the S shares that is absorbed by the group, which reduces P's basis in the M share under § 1.1502–32 from $1,000 to $978. Immediately after the transaction, the entities have the following:

| Entity | Asset | Basis |
|---|---|---|
| P | M share | $978 |
| X | 20 S shares | 20 |
| S | Category B, NOL carryover | 78 |
| | Category C, deferred deduction | 40 |
| | Category D, Class V Asset (land) | 70 |

(E) *Election to reduce stock basis.* The facts are the same as paragraph (ii)(A) of this *Example 8*, except that P elects under paragraph (d)(6) of this section to reduce M's basis in the S shares by the full attribute reduction amount of $22, in lieu of S reducing its attributes. The election is effective for all transferred loss shares and is allocated to such shares in proportion to the loss in each share. See paragraph (d)(6)(v)(A) of this section. Accordingly, the basis of each of the 20 transferred shares is reduced from $2.10 to $1.00. After giving effect to the election, the transferred S shares are not loss shares and this section has no further application to the transfer. The $22 reduction in M's basis in the S shares pursuant to the election under paragraph (d)(6) of this section is a noncapital, nondeductible expense of M that will reduce P's basis in the M share. See paragraph (d)(6)(v)(A) of this section. Immediately after the transaction, the entities have the following:

| Entity | Asset | Basis/ attribute |
|---|---|---|
| P | M share | $978 |
| M | 80 S shares | 168 |
| X | 20 S shares | 20 |
| S | Category A, capital loss carryover | 10 |
| | Category B, NOL | 90 |
| | Category C, deferred deduction | 40 |
| | Category D Class V Asset (land) | 70 |

(F) *Election to reattribute attributes.* The facts are the same as paragraph (ii)(A) of this *Example 8*. Because S remains a member of the same group as P following M's sale of S stock, P cannot elect under paragraph (d)(6) of this section to reattribute any portion of S's attributes in lieu of attribute reduction.

*Example 9. Transfers at multiple tiers, gain and loss shares.* (i) *Facts.* M owns the sole outstanding share of S stock with a basis of $700. S owns Asset 1 (basis of $170) and all ten outstanding shares of S1 common stock ($170 basis in share 1, $10 basis in share 2, and $15 basis in each of share 3 through share 10). S1 owns the sole outstanding share of S2 ($0 basis), the sole outstanding share of S3 ($60 basis), and the sole outstanding share of S4 ($100 basis). S2's sole asset is Asset 2 ($75 basis). S3's sole asset is Asset 3 ($75 basis). S4's sole asset is Asset 4 ($80 basis). In one transaction, M sells its S share to P1 (the common parent of a consolidated group) for $240, S sells S1 share 1 to X for $20, S contributes S1 share 2 to a partnership in a section 721 transaction, and S1 sells its S2 share to Y for $50. M's sale of the S share and S1's sale of the S2 share are transfers under paragraphs (f)(10)(i)(A), (f)(10)(i)(B), and (f)(10)(i)(C) of this section. S's sale of S1 share 1 to X is a transfer under paragraphs (f)(10)(i)(A) and (f)(10)(i)(C) of this section. S's contribution of S1 share 2 to the partnership is a transfer under paragraph (f)(10)(i)(C) of this section.

(ii) *Transfer in lowest tier (gain share).* S1's sale of the S2 share is the lowest-tier transfer in the transaction. Under paragraph (a)(3)(ii)(A) of this section, because there are no transfers of loss shares at that tier, no adjustments are required under paragraph (b) or (c) of this section. However, S1's gain recognized on the transfer of the S2 share is computed and immediately adjusts members bases in subsidiary stock under § 1.1502–32. Accordingly, $5 is allocated to each of 10 S1 shares, increasing the basis of share 1 to $175, the basis of share 2 to $15, and the basis of each other share to $20. The $50 applied to S's bases in the S1 shares then tiers up to increase P's basis in the S share from $700 to $750.

(iii) *Transfers in next highest tier (loss share).* S's sale of the S1 share 1 and S's transfer of the S1 share 2 to a partnership are both transfers of stock in the next higher tier. However, only the S1 share 1 is a loss share and so this section only applies with respect to the transfer of that share.

(A) *Basis redetermination under paragraph (b) of this section.* Under paragraph (b)(2)(i)(A) of this section, members' bases in S1 shares are redetermined by first removing the positive investment adjustments applied to the bases of transferred loss common shares. Accordingly, the $5 positive investment adjustment applied to the basis of S1 share 1 is removed, reducing the basis of S1 share 1 from $175 to $170. Because there were no negative adjustments applied to the bases of S1 shares, there are no negative adjustments that can be reallocated to further reduce the basis of S1 share 1 under paragraph (b)(2)(i)(B) of this section. Finally, under paragraph (b)(2)(ii)(B) of this section, the $5 positive investment adjustment removed from S1 share 1 is reallocated and applied to increase the bases of other S1 common shares in a manner that reduces disparity to the greatest extent possible. Accordingly, the entire $5 investment adjustment removed from S1 share 1 is reallocated and applied to increase the basis of S1 share 2, from $15 to $20. After basis is redetermined under paragraph (b) of this section, the S1 share 1 is still a loss share and therefore subject to basis reduction under paragraph (c) of this section. (Because the S1 share 2 is not a loss share, this section does not apply with respect to the transfer of that share.)

(B) *Basis reduction under paragraph (c) of this section.* No adjustment is required to the basis of S1 share 1 under paragraph (c) of this section. The S1 share 1 has a disconformity amount of $149. This $149 disconformity amount is computed as the excess of the $170 basis in the S1 share 1 over the S1 share 1's $21 allocable portion (1/10) of S1's $210 net inside attribute amount. S1's $210 net inside attribute amount is determined under paragraph (c)(5) of this section as the sum of $50 (S1's $0 basis in the S2 share, adjusted for the $50 gain recognized with respect to that share), S1's $60 basis in the S3 stock, and S1's $100 basis in the S4 stock. (In computing the disconformity amount, the basis of the S2 share is not treated as tentatively reduced because that share is transferred in the transaction, and the bases of the S3 and S4 shares are not treated as tentatively reduced because no positive investment adjustments were applied to the bases of those shares.) However, the S1 share 1's net positive adjustment is $0 because the $5 positive investment adjustment originally allocated to S1 share 1 was reallocated to S1 share 2 under paragraph (b) of this section. See paragraph (c)(3) of this section. No adjustment is required to the basis of S1

share 2 under paragraph (c) of this section because S1 share 2 is not a loss share.

(C) *Computation of loss, adjustments to stock basis.* S recognizes a loss of $150 on the sale of the S1 share 1 ($170 basis over $20 amount realized) that is absorbed by the group. Under § 1.1502–32, M's basis in its S share is therefore decreased by $100, the net of the $150 loss recognized by S on the sale of the S1 share, and the $50 gain that tiered up from S1 (as a result of S1's sale of the S2 share). Following these adjustments, M's basis in the S share is $600 and the sale of the S share is still a transfer of a loss share.

(iv) *Transfer in highest tier (loss share).* The sale of the S share is a transfer in the next higher tier, which is the highest tier in this transaction. Because the sale is a transfer of a loss share, it is subject to this section.

(A) *Basis redetermination and basis reduction under paragraphs (b) and (c) of this section.* Although the transfer is subject to this section, there is no basis redetermination under paragraph (b) of this section because there is only one share of S stock outstanding (and so there can be no disparity among members' bases in common shares and there are no outstanding preferred shares with respect to which there can be unrecognized gain or loss). See paragraph (b)(1)(ii)(A) of this section. Therefore, after the application of paragraph (b) of this section, the share is still a loss share and, as such, subject to paragraph (c) of this section. In addition, no adjustment is required under paragraph (c) of this section. The S share has a disconformity amount of $230. This $230 disconformity amount is computed as the excess of the $600 basis in the S share over the S share's $370 allocable portion (1/1) of S's $370 net inside attribute amount. S's $370 net inside attribute amount is determined under paragraph (c)(5) of this section as the sum of $200 (S's $170 basis in the S1 share 1, adjusted for the $150 loss recognized with respect to that share, and S's $20 basis in each of S1 share 2 through share 10), and S's $170 basis in Asset 1. (In computing the disconformity amount, the bases of S1 share 1 and share 2 are not treated as tentatively reduced because those shares are transferred in the transaction, and the bases of S1 share 3 through share 10 are not treated as tentatively reduced because none of those shares have a disconformity amount—each share has a basis of $20 and a $21 allocable portion (1/10) of S1's $210 net inside attribute amount, as determined in paragraph (iii)(B) of this *Example 9*.) However, the S share's net positive adjustment is $0 (the S share's net adjustment is negative $100). See paragraph (c)(3) of this section. Accordingly, the sale of the S share is still a transfer of a loss share. Because there are no higher-tier loss shares transferred in the transaction, this paragraph (d) then applies with respect to the transfer of the S share.

(B) *Attribute reduction under this paragraph (d).* (1) *Computation of S's attribute reduction amount.* Under paragraph (d)(3) of this section, S's attribute reduction amount is the lesser of P's net stock loss and S's aggregate inside loss. P's net stock loss is $360 ($600 basis over $240 amount realized). S's aggregate inside loss is the excess of S's net inside attribute amount over the value of the S share. S's net inside attribute amount is the sum of its bases in its assets, treating its S1 shares as a single share (the S1 stock) and treating S's deemed basis in the S1 stock as its basis in that stock. Under paragraph (d)(5)(i)(C) of this section, when subsidiaries are owned in multiple tiers, deemed basis is first determined for shares at the lowest tier, and then for stock in each next higher tier. Under paragraph (d)(5)(i)(B) of this section, S1's deemed basis in the S2 stock is $75 (computed as the greater of $50 (S1's $0 basis in the S2 share, adjusted for the $50 gain recognized with respect to the share) and $75 (S2's net inside attribute amount, the basis in Asset 2)). S1's deemed basis in the S3 stock is $75 (computed as the greater of $60 (S1's basis in the S3 share) and $75 (S3's net inside attribute amount, the basis in Asset 3)). S1's deemed basis in the S4 stock is $100 (computed as the greater of $100 (S1's basis in the S4 share) and $80 (S4's net inside attribute amount, the basis in Asset 4)). Accordingly, S1's net inside attribute amount is $250 ($75 deemed basis in the S2 stock plus $75 deemed basis in the S3 stock plus $100 deemed basis in the S4 stock). S's deemed basis in the S1 stock is the greater of the sum of S's actual basis in each share of S1 stock (adjusted for any gain or loss recognized) and S1's net inside attribute amount. S's actual basis in the S1 stock, adjusted for the loss recognized, is $200 (the sum of S's $170 basis in the S1 share 1, adjusted by the $150 loss recognized with respect to the share, and S's $20 basis in each of S1 share 2 through share 10). Thus, S's deemed basis in the S1 stock is $250, the greater of $200 (aggregate basis in S1 shares, adjusted for loss recognized) and $250 (S1's net inside attribute amount). As a result, S's net inside attribute amount is $420, the sum of S's $250 deemed basis in the S1 stock and S's $170 basis in Asset 1. Accordingly, the aggregate inside loss is $180, the excess of S's $420 net inside attribute amount over the $240 value of all of the S stock. S's attribute reduction amount is therefore $180, the lesser of the $360 net stock loss and the $180 aggregate inside loss.

(*2*) *Allocation, apportionment, and application of S's attribute reduction amount.* Under paragraphs (d)(4) and (d)(5)(ii) of this section, S's $180 attribute reduction amount is allocated proportionately (by basis) between Asset 1 (non-stock Category D asset) and the S1 stock. However, under paragraph (d)(5)(ii) of this section, for purposes of allocating S's $180 attribute reduction amount between S's non-stock Category D asset and the S1 stock, S's $250 deemed basis in the S1 stock is reduced by the $40 value of the transferred S1 shares (S1 share 1 and share 2) and the nontransferred S1 shares' $40 allocable portion (8/10) of S1's $50 net non-loss assets. S1's net non-loss assets is the $50 value of S1's transferred S2 shares. (S1 has no other non-loss assets, and there are no non-loss assets held by lower-tier subsidiaries.) Accordingly, for this purpose, S's deemed basis in the S1 stock is reduced by $80, from $250 to $170. Thus, $90 of the attribute reduction amount ($170/$340 × $180) is allocated to Asset 1 (reducing S's basis in Asset 1 from $170 to $80) and $90 of the attribute reduction amount ($170/$340 × $180) is allocated to the S1 stock. Under paragraph (d)(5)(iii)(A) of this section, none of the $90 allocated attribute reduction amount is apportioned to S1 share 1 because loss is recognized on the transfer of S1 share 1. Under paragraph (d)(5)(iii)(B) of this section, the $90 allocated attribute reduction amount is apportioned among the other nine shares of S1 common stock in a manner that reduces disparity to the greatest extent possible. Accordingly, of the total $90 allocated amount, $10 is apportioned to each of the remaining nine shares of S1 stock. Under paragraph (d)(5)(iii)(C) of this section, the allocated attribute reduction amount apportioned to an individual share cannot be applied to reduce the basis of the share below its value if the share is transferred other than in a recognition transfer. Because the S1 share 2 is transferred (contributed to the partnership) and the basis of S1 share 2 is already equal to its value, none of the $10 allocated attribute reduction amount apportioned to S1 share 2 is applied to reduce its basis. Because none of S1 share 3 through share 10 are transferred within the meaning of paragraph (f)(10) of this section, the $10 allocated attribute reduction amount apportioned to each of S1 share 3 through share 10 is applied fully to reduce the basis of each of those shares from $20 to $10. As a result, immediately after the allocation and application of S's attribute reduction amount, S's basis in Asset 1 is $80 ($170 minus $90), its bases in S1 share 1 and share 2 are not adjusted under paragraph (d)(5)(iii), and its basis in each of S1 share 3 through share 10 is $10. Under paragraph (d)(5)(v)(A) of this section, the entire $90 of S's attribute reduction amount that was allocated to the S1 stock is an attribute reduction amount of S1, regardless of the fact that none of the allocated amount was apportioned to S1 share 1 and none of the amount apportioned to S1 share 2 was applied to reduce the basis of S1 share 2.

(v) *Attribute reduction under this paragraph (d) in next lower tier. (A) Computation of S1's attribute reduction amount.* S's sale of S1 share 1 is a transfer of a loss share and it is in the next lower tier. Thus, this paragraph (d) next applies with respect to S's transfer of S1 share 1. S1's attribute reduction amount will include both the $90 attribute reduction amount that tiered down from S and any attribute reduction amount resulting from the application of this paragraph (d) with respect to S's transfer of S1 share 1 and share 2 (S1's direct attribute reduction amount). Under paragraph (d)(3) of this section, S1's direct attribute reduction amount is the lesser of the net stock loss on transferred S1 shares and S1's aggregate inside loss. The net stock loss on transferred S1 shares is $150, computed as the excess of S's $190 adjusted bases in transferred shares of S1 stock ($170 in S1 share 1 plus $20 in S1 share 2) over the $40 aggregate value of those shares. S1's aggregate inside loss is $50, the excess of S1's $250 net inside attribute amount (as calculated in paragraph (iv)(B)(*1*) of this *Example 9*) over the $200 value of all outstanding S1 shares. Therefore, S1's direct attribute reduction amount is $50, the lesser of the $150 net

stock loss and S1's $50 aggregate inside loss. S1's total attribute reduction amount is thus $140, the sum of the $90 tier-down attribute reduction amount and the $50 direct attribute reduction amount.

(B) *Allocation, apportionment, and application of S1's attribute reduction amount.* Under paragraphs (d)(4) and (d)(5)(ii) of this section, S1's $140 attribute reduction amount is allocated proportionately (by basis) among the S2 stock, the S3 stock, and the S4 stock. However, under paragraph (d)(5)(ii) of this section, for purposes of allocating S1's $140 attribute reduction amount among S1's lower-tier subsidiary stock, S1's $75 deemed basis in the S2 stock is reduced by the $50 value of the transferred S2 share. Accordingly, for this purpose, S1's deemed basis in the S2 stock is reduced by $50, from $75 to $25. Thus, $17.50 of S1's attribute reduction amount ($25/$200 × $140) is allocated to the S2 stock, $52.50 of S1's attribute reduction amount ($75/$200 × $140) is allocated to the S3 stock, and $70 of S1's attribute reduction amount ($100/$200 × $140) is allocated to the S4 stock. Under paragraph (d)(5)(iii)(A) of this section, none of the $17.50 of S1's attribute reduction amount allocated to S2 stock is apportioned to the S2 share because gain was recognized on the transfer of the S2 share. Because neither the S3 share nor the S4 share is transferred within the meaning of paragraph (f)(10) of this section, the $52.50 of S1's attribute reduction amount allocated to the S3 stock, and the $70 of S1's attribute reduction amount allocated to the S4 stock, is apportioned to and applied fully to reduce the basis of such shares. Thus, S1's basis in the S3 share is reduced by $52.50, from $60 to $7.50, and S1's basis in the S4 stock is reduced by $70, from $100 to $30. (Note: The conforming limitation in paragraph (d)(5)(v)(B) of this section limits the application of the $90 tier down attribute reduction amount to $80, the amount by which the portion (10/10) S1's $250 net inside attribute amount attributable to S1 shares held by members exceeds $170 (the sum of the $50 direct attribute reduction amount, the $20 value of the S1 share 1 transferred in a recognition transfer, the $20 basis (after reduction) in the S1 share 2 transferred other than in a recognition transfer, and the $80 aggregate basis (after reduction) in the nontransferred S1 shares held by members). However, the conforming limitation does not limit the application of S1's $90 tier-down attribute reduction amount because none of the $17.50 of S1's total attribute reduction amount allocated to the S2 share was applied to reduce the basis of the share. Accordingly, only $78.75 ($90—($17.50 × ($90/$140)) of the $90 tier-down attribute reduction was applied to reduce S1's attributes.) Under paragraph (d)(5)(v)(A) of this section, the attribute reduction amount allocated to the S2 stock, the S3 stock, and the S4 stock becomes an attribute reduction amount of S2, S3, and S4, respectively (even though the amount allocated to S2 stock was not apportioned to or applied to reduce the basis of the S2 share).

(vi) *Attribute reduction under this paragraph (d) in lowest tier.* Although the sale of the S2 share is a transfer of subsidiary stock at the next lower tier, the S2 share is not a loss share. Thus, this paragraph (d) does not apply with respect to that transfer. However, S2, S3, and S4 have attribute reduction amounts that tiered down from S1 and that are applied to reduce attributes under this paragraph (d).

(A) *Tier down of S1's attribute reduction amount to S2.* Under the general rules of this paragraph (d), S2's $17.50 tier-down attribute reduction amount is allocated and applied to reduce S2's basis in Asset 2 from $75 to $57.50.

(B) *Tier down of S1's attribute reduction amount to S3.* Under the general rules of this paragraph (d), S3's $52.50 tier-down attribute reduction amount is allocated and applied to reduce S3's basis in Asset 3 from $75 to $22.50.

(C) *Tier down of S1's attribute reduction amount to S4, application of conforming limitation.* Under the general rules of this paragraph (d), S4's $70 tier-down attribute reduction amount is allocated to, and would be applied to reduce, S4's basis in Asset 4. However, under paragraph (d)(5)(v)(B) of this section, the reduction is limited to the excess of S4's $80 net inside attribute amount over the $30 basis of the S4 share (after reduction under this paragraph (d)). As a result, only $50 (the excess of $80 over $30) of S4's $70 attribute reduction amount is applied to S4's basis in Asset 4, reducing it from $80 to $30. The $20 unapplied portion of S4's tier-down attribute reduction amount subject to the conforming limitation is disregarded and has no further effect.

(vii) *Application of basis restoration rule.* Under paragraph (d)(5)(vi)(A) of this section, after this paragraph (d) has been applied with respect to all transfers of subsidiary stock, any reduction made to the basis of a share of lower-tier subsidiary stock under paragraph (d)(5)(iii) of this section is reversed to the extent necessary to conform the basis of that share to the share's allocable portion of the subsidiary's net inside attribute amount. Restoration adjustments are first made at the lowest tier and then at each next higher tier successively.

(A) *Basis restoration at lowest tier.* The basis of the S2 share was not reduced under paragraph (d)(5)(iii) of this section and so there is no restoration of any basis in the S2 share. S3's $22.50 net inside attribute amount (after reduction under this paragraph (d)) exceeds S1's $7.50 basis in the S3 share (after reduction under this paragraph (d)) by $15. To conform S1's basis in the S3 share to S3's net inside attribute amount, the $52.50 reduction to the basis of the S3 share under paragraph (d)(5)(iii) of this section is reversed by $15 (restoring S1's basis in the S3 share to $22.50). The restoration of S1's basis in the S3 share does not tier up to affect the basis in stock of any other subsidiary. S1's $30 basis in the S4 share (after reduction under this paragraph (d)) is already conformed with S4's $30 net inside attribute amount (after reduction under this paragraph (d)) and so there is no restoration of any basis in the S4 share.

(B) *Basis restoration at next higher tier.* Each share of S1 stock has an allocable portion of S1's net inside attribute amount (after reduction) equal to $10.25 (1/10 × $102.50, the sum of S1's $0 basis in the S2 stock, adjusted for the $50 gain recognized with respect to the share, S1's $22.50 basis in the S3 stock (after restoration), and S1's $30 basis in the S4 stock). Neither S's basis in S1 share 1 nor S's basis in S1 share 2 was reduced under paragraph (d)(5)(iii) of this section. Accordingly, there is no restoration of any basis in either S1 share 1 or share 2. However, S's basis in each of S1 share 3 through share 10 was reduced under paragraph (d)(5)(iii) of this section by $10, from $20 to $10. Accordingly, the $10 reduction to the basis of each of those shares is reversed to the extent of $.25, to restore the basis of each such share to $10.25 (its allocable portion of S1's net inside attribute amount).

(viii) *Results.* After the application of this section, P recognizes a loss of $360 on the sale of the S share, S recognizes a loss of $150 on the sale of S1 share 1, and S1 recognizes a $50 gain on the sale of the S2 share. Immediately after the transaction, the entities each directly own the following:

| Entity | Asset | Basis | Value |
|---|---|---|---|
| P1 | S share | $240 | $240 |
| P | Proceeds of the sale of S share | 240 | 240 |
| S | Proceeds of sale of S1 share 1 | 20 | 20 |
| | Partnership interest received for S1 share 2 | 20 | 20 |
| | S1 share 3 through share 10 | 82 ($10.25 per share). | |
| | Asset 1 | 80 | |
| S1 | Proceeds of sale of S2 share | 50 | 50 |
| | The S3 share | 22.50 | |
| | The S4 share | 30 | |
| S2 | Asset 2 | 57.50 | |
| S3 | Asset 3 | 22.50 | |
| S4 | Asset 4 | 30 | |

| Entity | Asset | Basis | Value |
|---|---|---|---|
| X | S1 share 1 | 20 | 20 |
| Partnership | S1 share 2 | 20 | 20 |
| Y | The S2 share | 50 | 50 |

(e) *Operating rules*—(1) *Predecessors, successors.* This section applies to predecessor or successor persons, groups, and assets to the extent necessary to effectuate the purposes of this section.

(2) *Adjustments for prior transactions that altered stock basis or other attributes.* In certain situations, M's basis in S stock or S's attributes may be adjusted in a manner that alters the relationship between stock basis and inside attributes and prevents that relationship from identifying the extent to which stock basis reflects unrecognized gain and duplicated loss. The provisions of this paragraph (e)(2) modify the computations in paragraphs (c) and (d) of this section to adjust for the effects of such adjustments.

(i) *Prior reductions to S's basis in assets or other attributes pursuant to section 362(e)(2)(A).* If M transferred loss property to S in an intercompany transaction subject to section 362(e)(2) (for example, if the transfer was prior to September 17, 2008, no election was made to apply § 1.1502–80(h), and, as a result, S's attributes were reduced under section 362(e)(2)), then the disconformity amount of the S shares received in the section 362(e)(2) transaction is reduced by the amount that the basis in such shares would have been reduced under section 362(e)(2)(C) had such an election been made. In addition, for purposes of determining the attribute reduction amount under paragraph (d) of this section resulting from the transfer of any S shares received (or deemed received) in such a transfer, and for purposes of applying paragraph (d)(5)(v)(B) of this section (conforming limitation) to S, the bases in such shares is treated as reduced by the amount the bases in such shares would have been reduced under section 362(e)(2)(C) had such an election been made.

(ii) *Prior reductions to the basis of any share of S stock pursuant to an election under section 362(e)(2)(C).* If M transferred loss property to S in an intercompany transaction subject to section 362(e)(2) and the basis of any share of S stock was reduced as the result of an election under section 362(e)(2)(C) (including in the hands of a predecessor, to the extent that the effect of the election remains reflected in the basis of the S stock), then, for purposes of computing either any S share's disconformity amount or S's aggregate inside loss, and for purposes of applying paragraph (d)(5)(vi)(A) of this section (stock basis restoration) to S, S's net inside attribute amount is treated as reduced by the amount that S's attributes would have been reduced under section 362(e)(2)(A) in the absence of an election under section 362(e)(2)(C). Notwithstanding the general rule of this paragraph (e)(2)(ii), no reduction will be required to the extent that the group can establish that the net loss in the S shares transferred by M is no longer reflected in S's net inside attributes.

(iii) *Other adjustments.* Appropriate adjustments will be made in any other case in which an adjustment to S's net inside attributes or to M's basis in a share of S stock alters the relationship between such amounts, and the adjustment does not relate to the extent to which loss reflected in M's basis in S stock is noneconomic or duplicated within the meaning of this section.

(3) *Special rules for subsidiary stock transferred in an intercompany transaction*—(i) *In general.* This section applies with respect to M's transfer of a share of S stock to another member in an intercompany transaction in which M's intercompany item is deferred under § 1.1502–13 (and to any subsequent transfer of that share by a member) as of the time M's intercompany item is taken into account under § 1.1502–13. In determining the application of this section, all transferor-members are treated as divisions of a single corporation. Appropriate adjustments will be made to the intercompany item(s), any member's basis in an S share, to S's attributes, or any combination thereof, to further the purposes of this section and § 1.1502–13.

(ii) *Certain prior intercompany transactions.* If M transferred a share of S stock to another member before September 17, 2008 and M's intercompany item related to the transfer is taken into account on or after September 17, 2008, P may elect to apply this paragraph (e)(3) to the transfer. The election is made in the manner provided in paragraph (e)(5) of this section.

(iii) *Examples.* The application of this paragraph (e)(3) is illustrated by the following examples:

*Example 1. Intercompany sale with duplicated loss.* (i) *Buying member later sells at gain.* (A) *Facts.* M owns the sole outstanding share of stock of S with a basis of $100. S has one asset with a basis of $100. M sells the S share to M1 for $70, recognizing a loss of $30. While owned by M1, S recognizes $10 of depreciation deductions that are absorbed by the group. S's basis in the asset is reduced by $10 (from $100 to $90), and M1's basis in the S stock is reduced under § 1.1502–32 by $10 (from $70 to $60). Later, M1 sells the S share to X, an unrelated person, for $80.

(B) *Analysis.* M's sale of its S share to M1 is a transfer of the share, but this section applies as of the time M's intercompany item is taken into account under § 1.1502–13, as if M and M1 were divisions of a single corporation. If M and M1 were divisions of a single corporation, the S share's basis would be $90 ($100 reduced by $10 for the depreciation deductions absorbed by the group) and the group would recognize a $10 loss on the sale of the share that is potentially subject to this section. Thus, the sale would be a transfer of a loss share (to the extent of $10) and would be subject to this section (to the extent of that $10). Although the transfer would be subject to this section, there would be no adjustment under paragraph (b) of this section (S has only one share outstanding and so there is no disparity in bases of common shares and no unrecognized gain or loss with respect to preferred) or under paragraph (c) of this section (S has no net positive adjustment). Thus, after the application of paragraph (c) of this section, the share would still be a loss share and would therefore be subject to paragraph (d) of this section. Under paragraph (d) of this section, S would be subject to $10 of attribute reduction (the lesser of the $10 net stock loss and S's $10 aggregate inside loss), allocable to the basis in S's asset. Accordingly, S's basis in its asset is reduced by $10, from $90 to $80, M takes its $30 intercompany stock loss into account, and M1 recognizes a $20 stock gain.

(ii) *Selling member deconsolidates.* Assume the same facts as in paragraph (i)(A) of this *Example 1,* except that M1 does not sell the S share and M ceases to be a member of the group when the value of the S share is $80. Under § 1.1502–13, M's deconsolidation causes M's intercompany loss to be taken into account and this section applies at that time. At the time that M deconsolidates, if M and M1 were divisions of a single corporation, the basis in the S share would be $90 ($100 reduced by $10 for the depreciation deductions absorbed by the group) and the group would recognize a $10 loss on the sale of the share that is potentially subject to this section. Such a sale would be a transfer of a loss share (to the extent of $10) and would be subject to this section (to the extent of that $10). The analysis is then the

same as in paragraph (i)(B) of this *Example 1.* As a result, S's basis in its asset is reduced from $90 to $80, M takes its $30 intercompany stock loss into account, and M1 holds the S stock with a basis of $60 (and an unrecognized gain of $20).

(iii) *M1 sells the S share at a loss.* Assume the same facts as in paragraph (i)(A) of this *Example 1,* except that S declines in value and M1 sells the S share to X for $50, realizing a $10 loss. In this case, if M and M1 were divisions of a single corporation, the share's basis would be $90 ($100 reduced by $10 for the depreciation deductions absorbed by the group) and the group would recognize a $40 loss on the sale of the share that is potentially subject to this section. Thus, the sale would be a transfer of a loss share (to the extent of $40) and would be subject to this section (to the extent of that $40). Although the transfer would be subject to this section, for the reasons set forth in paragraph (i)(B) of this *Example 1*, there would be no adjustment under either paragraph (b) or paragraph (c) of this section. Thus, after the application of paragraph (c), the share would still be a loss share and would therefore be subject to paragraph (d) of this section. Under paragraph (d) of this section, S would be subject to $40 of attribute reduction (the lesser of the $40 net stock loss and S's $40 aggregate inside loss), allocable to the basis in S's asset. Accordingly, S's basis in its asset is reduced by $40, from $90 to $50, M takes its $30 intercompany stock loss into account, and M1 recognizes a $10 stock loss.

*Example 2. Intercompany sale of built-in gain stock.* (i) *Facts.* M owns the sole outstanding share of stock of S with a basis of $100. S's sole asset has a basis of $0. S sells its asset for $100 and recognizes a $100 gain that increases M's basis in its S share under § 1.1502–32 to $200. M sells the S share to M1 for $100 and recognizes a $100 intercompany loss. Later, M1 sells the S share to X, an unrelated person, for $120.

(ii) *Analysis.* M's sale of the S share to M1 is a transfer of the share, but this section applies as of the time M's intercompany item is taken into account under § 1.1502–13, as if M and M1 were divisions of a single corporation. If M and M1 were divisions of a single corporation, the S share's basis would be $200 ($100 increased by $100 for the gain recognized on the sale of the asset) and the group would recognize an $80 loss on the sale of the share that is potentially subject to this section. Thus, the sale would be a transfer of a loss share (to the extent of $80) and would be subject to this section (to the extent of that $80). Although the transfer would be subject to this section, there would be no adjustment under paragraph (b) of this section (S has only one share outstanding and so there is no disparity in bases of common shares and no unrecognized gain or loss with respect to preferred). Thus, after the application of paragraph (b), the share would still be a loss share and would therefore be subject to paragraph (c) of this section. Under paragraph (c) of this section, the basis in the S share would be reduced, but not below its $120 value, by the lesser of the $100 disconformity amount and the $100 net positive adjustment that was applied to the share when held by M. Accordingly, the basis in the S share would be reduced by $80, to $120. Because the S share would not be a loss share after the application of paragraph (c) of this section, paragraph (d) of this section would not apply to the transfer. As a result, because the positive adjustment was applied to the share when held by M, M's intercompany item is adjusted to reflect what it would have been had M's basis in its S share been reduced by $80 immediately before its sale to M1. Thus, M's intercompany loss is reduced to $20 and M takes this loss into account, and M1 recognizes a gain of $20.

*Example 3. Intercompany sale creates built-in gain stock.* (i) *Facts.* M owns the sole outstanding share of stock of S with a basis of $0. S's sole asset has a basis of $0. M sells the S share to M1 for $100 and recognizes a $100 intercompany gain. While owned by M1, S sells its asset for $100, recognizing a $100 gain that increases M1's basis in the S share under § 1.1502–32 to $200. Later, M1 sells the S share to X for $120.

(ii) *Analysis.* M's sale of its S share to M1 is a transfer of the share, but this section applies as of the time M's intercompany item is taken into account under § 1.1502–13, as if M and M1 were divisions of a single corporation. If M and M1 were divisions of a single corporation, the S share's basis would be $100 ($0 increased by $100 for the gain recognized on the sale of the asset) and the group would recognize a $20 gain on the sale of the share. Thus, the sale would not be a transfer of a loss share and this section would not apply to the transfer. Accordingly, under this paragraph (e)(3), no portion of M1's $80 loss is subject to this section. M takes its $100 intercompany stock gain into account, and M1 recognizes an $80 loss.

*Example 4. Disparate bases in members' shares.* (i) *Facts.* M holds Share A, one of the two outstanding shares of S stock, with a basis of $50 and M1 holds Share B, the other outstanding share of S stock with a basis of $0. S has $50 cash and an asset with a basis of $0. S sells the asset for $50, recognizing a $50 gain that increases M's basis in its S share under § 1.1502–32 by $25 (from $50 to $75) and increases M1's basis under § 1.1502–32 by $25 (from $0 to $25). Later, M sells its Share A to M1 for $50 and recognizes a $25 intercompany loss. Later, M1 sells both S shares to X for $100.

(ii) *Analysis.* M's sale of its Share A to M1 is a transfer of the share, but this section applies as of the time M's intercompany item is taken into account under § 1.1502–13, as if M and M1 were divisions of a single corporation. If M and M1 were divisions of a single corporation, the basis of Share A would be $75 ($50 increased by $25 for its share of the gain recognized on the sale of the asset), the basis of Share B would be $25, and the group would recognize a $25 loss on the sale of Share A that is potentially subject to this section and a $25 gain on the sale of Share B. Thus, the sale would be a transfer of a loss share (to the extent of $25) and would be subject to this section (to the extent of that $25). Although the transfer is subject to this section, there would be no adjustment under paragraph (b) of this section (all S shares held by members are transferred to a nonmember in one taxable transaction). Thus, after the application of paragraph (b), Share A would still be a loss share and therefore subject to paragraph (c) of this section. Under paragraph (c)(7) of this section, the basis of Share A would be treated as reduced by the gain recognized and taken into account with respect to the transfer of Share B in the same transaction, and so Share A would not be a loss share for purposes of paragraph (c) of this section. Although the share would be a loss share after the application of paragraph (c) of this section, no adjustment would be required under paragraph (d) of this section because there would be no net stock loss in the transaction. Because no adjustment would be made under this section if M and M1 were divisions of a single corporation, M takes its $25 intercompany stock loss into account and M1 recognizes a gain of $25. Alternatively, if the group elects to apply paragraph (b) of this section, M's intercompany item would be adjusted to reflect what it would have been had the $25 investment adjustment applied to Share A been reallocated to Share B, and M1's basis in Share B would be increased by that amount. If so, M's $25 intercompany loss would be reduced to zero, M1's basis in Share B would be increased from $25 to $50, and there would be no gain or loss recognized on either share.

*Example 5. Subsidiary with built-in gain and built-in loss assets.* (i) *Facts.* M owns the sole outstanding share of stock of S with a basis of $100. S has two assets, Asset 1 with a basis of $0 and Asset 2 with a basis of $80. M sells the S share to M1 for $90 and recognizes a $10 intercompany loss. While owned by M1, S sells Asset 1 for $60, recognizing a $60 gain that increases M1's basis in the S share under § 1.1502–32 to $150. Later, M1 sells the S share to X for $90.

(ii) *Analysis.* M's sale of the S share to M1 is a transfer of the share, but this section applies as of the time M's intercompany item is taken into account under § 1.1502–13, as if M and M1 were divisions of a single corporation. If M and M1 were divisions of a single corporation, the S share's basis would be $160 ($100 increased by $60 for the gain recognized on the sale of Asset 1) and the group would recognize a $70 loss on the sale of the share that is potentially subject to this section. Thus, the sale would be a transfer of a loss share (to the extent of $70) and would be subject to this section (to the extent of that $70). Although the transfer is subject to this section, there would be no adjustment under paragraph (b) of this section (S has only one share outstanding and so there is no disparity in bases of common shares and no unrecognized gain or loss with respect to preferred). Thus, after the application of paragraph (b), the share would still be a loss share and would therefore be subject to paragraph (c) of this section. Under paragraph (c) of this section, the basis in the S share would be reduced, but not below its $90 value, by the lesser of the $20 disconformity amount ($160 stock basis over $140 net inside attribute amount) and the $60 net positive adjustment that was applied to the share when held by M1. Accordingly, the basis in the S share would be reduced by $20, to $140. Because the S share would still be

a loss share after the application of paragraph (c) of this section, paragraph (d) of this section would apply to the transfer. Under paragraph (d) of this section, S would have an attribute reduction amount of $50, the lesser of the $50 net stock loss ($140 basis over $90 value) and S's $50 aggregate inside loss (the excess of the sum of S's $80 basis in Asset 2 and S's $60 cash from the sale of Asset 1, over the $90 value of the S share). The adjustments required under this section are applied as follows: because the positive adjustment was applied to the share when held by M1, the $20 basis reduction required under paragraph (c) of this section is applied to M1's basis in its S share immediately before its sale to X, reducing it from $150 to $130. In addition, pursuant to paragraph (d) of this section, S's basis in Asset 2 is reduced by $50, from $80 to $30. M takes its $10 intercompany stock loss into account and M1 recognizes a loss of $40.

(iii) *Allocation of basis reduction.* Assume the same facts as in paragraph (i) of this *Example 5,* except that, while S is held by M, S earns $30 (consuming a portion of Asset 1) and, while S is held by M1, S earns $20 (consuming a portion of Asset 1) and sells Asset 1 for $10. Thus, M's basis in the S share immediately before the sale to M1 is $130, and M recognizes a $40 intercompany stock loss, and M1's basis in the S share immediately before the sale to X is $120. The analysis regarding the application of this section is the same as in paragraph (ii) of this *Example 5.* On a separate entity basis, M's basis in the S share would be subject to a $20 reduction under paragraph (c) of this section (at the time M transferred the S share the share had a $30 net positive adjustment and a $20 disconformity amount), and M1's basis in the S share would not be subject to reduction under paragraph (c) of this section (at the time M1 transferred the S share the share had a $30 net positive adjustment and a $20 negative disconformity amount). Therefore, the $20 basis reduction required under paragraph (c) of this section is allocated entirely to M. Accordingly, M's intercompany item is adjusted to reflect what it would have been had the entire $20 basis reduction been applied to the S share while held by M, and M1's basis in the S share is not reduced. Thus, M's intercompany stock loss is reduced by $20 to $20 and M takes this loss into account, and M1 recognizes a $30 loss. S's basis in Asset 2 is reduced by $50, from $80 to $30.

(4) *Limited application to multiple-member section 332 liquidations.* If more than one member owns shares of S stock, paragraphs (c) and (d) of this section do not apply to any transfer of S shares resulting from a liquidation of S to which section 332 applies.

(5) *Form and manner of election(s) under this section.* The elections provided in this section are irrevocable and made in the form of a statement titled ''Section 1.1502–36 Statement.'' The statement must be included on or with the group's timely filed return (original or amended, if filed by the due date for the return, including extensions) for the taxable year of the transfer of the subsidiary stock to which the election relates or, in the case of an intercompany transfer, the year in which the intercompany item from the transfer is taken into account. The statement must include—

(i) The name and employer identification number (E.I.N.) of each subsidiary with respect to which an election is being made;

(ii) If P is electing under paragraph (b)(1)(ii) of this section to redetermine basis with respect to the transfer of stock of one or more subsidiaries, a statement that members' bases in shares of [name of subsidiary or subsidiaries] stock are being redetermined notwithstanding that all members' shares of [name of subsidiary or subsidiaries] are being transferred to one or more nonmembers in one fully taxable transaction;

(iii) If P is electing under paragraph (d)(2)(ii) of this section (attribute reduction amount less than five percent of value) to apply the attribute reduction provisions, a statement that paragraph (d) of this section is being applied to the transfer of shares of stock of [names of all subsidiaries whose shares are transferred] notwithstanding that the aggregate attribute reduction amount in the transaction is less than five percent of the aggregate value of the stock of [names of all subsidiaries whose shares are transferred] transferred by members in the transaction;

(iv) If P is electing under paragraph (d)(4)(ii)(A)(*1*) of this section to specify the allocation of the attribute reduction amount, a statement (for each subsidiary for which the election is being made) that the attribute reduction amount of [name of subsidiary] is being applied (or not applied) to reduce [identify the attributes in Category A, Category B, and Category C, and the amount of each, with respect to which the election is being made];

(v) If P is electing under paragraph (d)(5)(v)(B) of this section not to apply the conforming limitation on tier-down attribute reduction with respect to one or more subsidiaries, a statement that the conforming limitation in paragraph (d)(5)(v)(B) of this section is not being applied with respect to [name of subsidiary or subsidiaries];

(vi) If P is electing under paragraph (d)(5)(vi)(B) of this section not to restore lower-tier subsidiary stock basis with respect to one or more subsidiaries, a statement that members' bases in [name of subsidiary or subsidiaries] is not being restored under paragraph (d)(5)(vi)(A) of this section;

(vii) If P is electing under paragraph (d)(6) of this section to reattribute attributes, a statement (for each subsidiary for which the election is being made) that [identify the attributes in Category A, Category B, and Category C, and the amount of each or the amount in excess of an amount, with respect to which the election is being made] of [name of subsidiary] are being reattributed (or not) to P;

(viii) If P is electing under paragraph (d)(6) of this section to reduce stock basis, a statement (for each subsidiary for which the election is being made) that members' bases in shares of stock of [name of subsidiary] are being reduced by [specify amount or the amount in excess of an amount];

(ix) If P is electing under paragraph (e)(3)(ii) of this section to apply paragraph (e)(3) of this section to an intercompany transfer that occurred before September 17, 2008, a statement that paragraph (e)(3) of this section is being elected to apply to the transfer of stock of [name of subsidiary] by [name of transferor subsidiary] to [name of transferee subsidiary] on [date of transfer]; and

(x) If P is electing under § 1.1502–96(d)(5) to reattribute to itself all or any part of a section 382 limitation, a statement that P is electing to reattribute a section 382 limitation with respect to losses of [name of subsidiary or, if two or more subsidiaries are members of a loss subgroup, the name of each subsidiary in the loss subgroup]. A separate statement is made for each subsidiary or loss subgroup for which an election is being made. Each statement must include—

(A) The date of the ownership change giving rise to the separate section 382 limitation or subgroup section 382 limitation that is being apportioned;

(B) The amount of the separate (or subgroup) section 382 limitation for the taxable year in which the reattribution occurs (determined without reference to any apportionment under this section or § 1.1502–95(c)); and

(C) The amount of each net operating loss carryover, capital loss carryover, or deferred deduction, and the year in which it arose, of the subsidiary (or subsidiaries) that is subject to the separate section 382 limitation or subgroup section 382 limitation that is being apportioned to the common parent, and the amount of the value element and adjustment element of that limitation that is apportioned to the common parent.

(f) *Definitions.* In addition to the definitions in other paragraphs of this section and in other provisions of the regulations under section 1502, the following definitions apply for purposes of this section.

(1) *Allocable portion* has the same meaning as in § 1.1502–32(b)(4)(iii)(B). Thus, for example, within a class of stock, each share has the same allocable portion of the net inside attribute amount and, if there is more than one class of stock, the net inside attribute amount is allocated to each class by taking into account the terms of each class and all other facts and circumstances relating to the overall economic arrangement.

(2) *Deferred deduction* means any deduction for expenses or loss that would be taken into account under general tax accounting principles as of the time of the transfer of the share, but that is nevertheless not taken into account immediately after the transfer by reason of the application of a deferral provision. Such provisions include, for example, sections 267(f) and 469, and § 1.1502–13. ''Deferred deduction'' also includes S's portion of such consolidated tax attributes, for example consolidated excess charitable contributions that would be apportioned to S under the principles of § 1.1502–79(e) if S had a separate return year. Additionally, it includes amounts equivalent to deductions, such as negative adjustments under section 475 (mark to market accounting method for dealers in securities) and section 481 (adjustments required by changes in method of accounting).

(3) *Distribution* has the same meaning as in § 1.1502–32(b)(3)(v).

(4) *Higher-tier, lower-tier.* A subsidiary (S1) (and its shares of stock) is ''higher-tier'' with respect to another subsidiary (S2) (and its shares of stock) if investment adjustments made to the bases of shares of S2 stock under § 1.1502–32 affect the investment adjustments made to the bases of shares of S1 stock. A subsidiary (S1) (and its shares of stock) is ''lower-tier'' with respect to another subsidiary (S) (and its shares of stock) if investment adjustments made to the bases of shares of S1 stock affect the investment adjustments made to the bases of shares of S stock. The term *lowest-tier subsidiary* generally refers to a subsidiary that owns no stock of another subsidiary. The term *highest-tier subsidiary* generally refers to a subsidiary the stock of which is not lower tier to any shares transferred in the transaction.

(5) *Liability* means a liability that has been incurred within the meaning of section 461(h), except to the extent otherwise provided in paragraph (d)(4)(ii)(C)(*1*) of this section.

(6) *Loss carryover* means any net operating or capital loss carryover that is attributable to S, including any losses that would be apportioned to S under the principles of § 1.1502–21(b)(2) if S had a separate return year. However, solely for purposes of applying paragraph (d) of this section, loss carryovers do not include the amount of any losses waived under § 1.1502–32(b)(4).

(7) *Loss share, gain share.* A *loss share* is a share of stock with a basis that exceeds its value. A *gain share* is a share of stock with a value that exceeds its basis.

(8) *Preferred stock, common stock. Preferred stock* and *common stock* have the same meanings as in § 1.1502–32(d)(2) and (3), respectively.

(9) *Transaction* includes all the steps taken pursuant to the same plan or arrangement.

(10) *Transfer*—(i) *Definition.* Except as provided in paragraph (f)(10)(ii) of this section, for purposes of this section, M transfers a share of S stock on the earliest of—

(A) The date that M ceases to own the share as a result of a transaction in which, but for the application of this section (and notwithstanding the deferral of any amount recognized on the transfer, other than by reason of § 1.1502–13), M would recognize income, gain, loss or deduction with respect to the share (see paragraph (e)(3) of this section in the case of a transfer in an intercompany transaction);

(B) The date that M and S cease to be members of the same group;

(C) The date that a nonmember acquires the share from M; and

(D) The last day of the taxable year during which the share becomes worthless under section 165 (taking into account the provisions of § 1.1502–80(c)) if the share is treated as a capital asset, or the date the share becomes worthless (taking into account the provisions of § 1.1502–80(c)) if the share is not treated as a capital asset.

(ii) *Excluded transactions.* Notwithstanding paragraph (f)(10)(i) of this section, M does not transfer a share of S stock if—

(A) M ceases to own the share as a result of a transaction to which section 381(a) applies and in which either a member acquires assets from S or S acquires assets from M, provided that—

(*1*) M recognizes no income, gain, loss, or deduction with respect to the share, and

(*2*) If the transaction is a liquidation to which section 332 applies, M is the only member that owns shares of S stock (if another member owns shares of S stock, see paragraph (e)(4) of this section for a limitation on the application of this section); or

(B) M ceases to own the share as a result of a distribution of the share to a nonmember in a transaction to which section 355 applies, and in which the share is treated as qualified property for purposes of section 355(c) or section 361(c).

(11) *Value* means the amount realized, if any, or otherwise the fair market value.

(g) *Anti-abuse rule*—(1) *General rule.* If a taxpayer acts with a view to avoid the purposes of this section or to apply the rules of this section to avoid the purposes of any other rule of law, appropriate adjustments will be made to carry out the purposes of this section or such other rule of law.

(2) *Examples.* The following examples illustrate the principles of the anti-abuse rule in this paragraph (g). No implication is intended regarding the potential applicability of any other anti-abuse rules:

*Example 1. Loss Trafficking.* (i) *Facts.* M purchases the sole outstanding share of S stock for $100. At that time, S owns Asset 1 with a basis of $0. S sells Asset 1 for $100. Later, S purchases the sole outstanding share of X stock, a corporation with losses, with a view to liquidating X in a transaction to which section 332 applies in order to reduce S's disconformity amount. S purchases the X share for $1, and X has a $100 NOL and an asset with a basis of $1. Subsequently, M sells its S share for $100. After taking into account the effects of all applicable rules of law, M's basis in the S share is $200 (M's original $100 basis, increased under § 1.1502–32 to reflect the $100 gain recognized on the sale of Asset 1). M's sale of the S share is a transfer of a loss share and therefore subject to this section.

(ii) *Analysis.* Although M's transfer of the S share is subject to this section, there is no adjustment under paragraph (b) of this section (S has only one share outstanding and so there is no disparity in bases of common shares and no shares of S preferred stock outstanding (and so there is no unrecognized gain or loss on S preferred stock)). See paragraph (b)(1)(ii)(A) of this section. Accordingly, after the application of paragraph (b) of this section, M's sale of the S share is still a transfer of a loss share and therefore subject to paragraph (c) of this section. Under paragraph (c) of this section, M's $200 basis in the S share is reduced, but not below the share's $100 value, by the lesser of the share's net positive adjustment and disconformity amount. The share's net positive adjustment is $100, the positive adjustment attributable to the gain recognized on the sale of Asset 1. The share's disconformity amount is $0, the excess of M's $200 basis in the S share over S's $200 net inside attribute amount. Thus, the reduction to basis under paragraph (c) of this section would be $0. However, because S purchased the X stock and liquidated X with a view to avoiding the purposes of this section (by using X's attributes to minimize the disconformity amount of the S share), the

attributes acquired from X are disregarded for purposes of applying this section. Accordingly, S's net inside attribute amount is limited to the $100 of attributes S would have had absent the purchase of the X stock, S's money ($100 from the sale of Asset 1). The loss share's disconformity amount is therefore the excess of $200 over $100, or $100. The lesser of the share's $100 net positive adjustment and $100 disconformity amount is $100. As a result, M's $200 basis in the S share is reduced by $100, to $100, and M recognizes no gain or loss on the sale of the S share.

*Example 2. Use of a partnership to prevent current attribute reduction.* (i) *Facts.* M owns all 5 outstanding shares of S common stock with a basis of $200 each. S owns Asset 1 with a basis of $1000. In year 1, with a view to preventing a current reduction in the basis of Asset 1, S contributes Asset 1 to a partnership in a transaction in which S recognizes no gain or loss. On December 31, year 2, M sells one S share for $20. After taking into account the effects of all applicable rules of law, M's basis in each S share is $200. M's sale of the S share is a transfer of a loss share and therefore subject to this section.

(ii) *Analysis.* Although M's transfer of the S share is subject to this section, there is no basis redetermination under paragraph (b) of this section because there is no disparity among M's bases in its shares of S common stock and there are no shares of S preferred stock outstanding (and so there is no unrecognized gain or loss on S preferred stock). See paragraph (b)(1)(ii)(A) of this section. Accordingly, after the application of paragraph (b) of this section, M's sale of the S share is still a transfer of a loss share and therefore subject to paragraph (c) of this section. However, no adjustment is required under paragraph (c) of this section because both the disconformity amount and the net positive adjustment are $0. See paragraph (c)(3) of this section. Under paragraph (d) of this section, S's attribute reduction amount is $180 (the lesser of the $180 net stock loss and S's $900 aggregate inside loss ($1000 of attributes over $100 value of all of the S shares)). Absent the application of this paragraph (g), the $180 attribute reduction amount would be applied to reduce S's basis in the partnership interest. However, because S acted with a view to avoiding a current reduction in the basis of Asset 1 under paragraph (d) of this section, this section is applied by treating S as if it held Asset 1 at the time of the stock sale. The basis of Asset 1 is reduced by $180, to $820, effective immediately before the transfer to the partnership and, as a result, S's basis in its partnership interest is $820.

*Example 3. Creation of an intercompany receivable to mitigate attribute reduction.* (i) *Facts.* M owns all five outstanding shares of S common stock each with equal basis that exceeds value. S holds cash and Asset 1 with a basis that exceeds value. In year 1, with a view to mitigating a reduction in the basis of Asset 1, S lends the cash to M1. Asset 1 and the intercompany note received from M1 are assets of the same class under § 1.338–6(b)(2). On December 31, year 2, M sells one of its S shares and, without regard to this section, recognizes a loss. M's sale of the S share is a transfer of a loss share and therefore subject to this section.

(ii) *Analysis.* Although M's transfer of the S share is subject to this section, no adjustment is required under paragraph (b) of this section because there is no disparity among M's bases in shares of S common stock and there are no shares of S preferred stock outstanding (and so there is no unrecognized gain or loss on S preferred stock). See paragraph (b)(1)(ii)(A) of this section. Accordingly, after the application of paragraph (b) of this section, M's sale of the S shares is still a transfer of a loss share and therefore subject to paragraph (c) of this section. However, there is no adjustment under paragraph (c) of this section because the net positive adjustment is $0. See paragraph (c)(3) of this section. Under paragraph (d) of this section, S's attribute reduction amount would be applied to reduce S's basis in Asset 1 and the intercompany receivable in proportion to basis. However, because S acted with a view to mitigating the reduction in the basis of Asset 1 under paragraph (d) of this section, this section is applied without regard to the intercompany receivable. Accordingly, S's basis in Asset 1 is reduced by the full attribute reduction amount.

*Example 4. Use of a partnership to reduce net stock loss.* (i) *Facts.* M owns all ten outstanding shares of S common stock, one share (Share 1) has a basis of $0, and one share (Share 2) has a basis of $160. S has an aggregate inside loss of $80. In one transaction and with a view to mitigating a reduction in S's attributes, M contributes Share 1 to a partnership, recognizing no gain or loss, and sells Share 2 for $80. M's contribution of Share 1 to the partnership is a transfer, but the share is not a loss share and so the transfer is not subject to this section. M's sale of Share 2 is a transfer of a loss share and is therefore subject to this section.

(ii) *Analysis.* Although M's transfer of Share 2 is subject to this section, there is no adjustment under paragraph (b) of this section because there are no investment adjustments that have been applied to the shares. Accordingly, after the application of paragraph (b) of this section, M's sale of Share 2 is still a transfer of a loss share and therefore subject to paragraph (c) of this section. There is no adjustment under paragraph (c) of this section because the net positive adjustment is $0. See paragraph (c)(3) of this section. Accordingly, after the application of paragraph (c) of this section, M's sale of Share 2 is still a transfer of loss shares and therefore subject to paragraph (d) of this section. Under paragraph (d) of this section, the net stock loss would be determined to be $0, the excess of the $160 aggregate basis in all of the transferred shares over the $160 aggregate value of those shares. S's attribute reduction amount would be determined to be $0, the lesser of the $0 net stock loss and S's $80 aggregate inside loss. Thus, there would be no reduction of attributes under this paragraph (d) of this section. However, because M acted with a view to reducing the attribute reduction amount by transferring a gain share to a partnership while avoiding the recognition of the gain on the share, this section is applied without regard to the transfer of the gain share. Accordingly, the net stock loss is determined to be $80, and the attribute reduction amount is determined to be $80.

*Example 5. Stuffing gain asset.* (i) *Facts.* M owns the sole outstanding share of S stock (Share 1) with a basis of $100. S owns Asset 1 a basis of $100 and a value of $20. With a view to avoid the purposes of this section, M transfers Asset 2 with a basis of $0 and a value of $80 to S in exchange for four additional shares of S stock (Share 2 through Share 5) in a transaction to which section 351 applies. M later sells Share 1 to X for $20. M's sale of Share 1 is a transfer of a loss share and therefore subject to this section.

(ii) *Analysis.* Although M's transfer of the Share 1 is subject to this section, there is no adjustment under paragraph (b) of this section because no investment adjustments have been applied to the basis of any S shares. Thus, after the application of paragraph (b) of this section, M's sale of the S share is still a transfer of a loss share and therefore subject to paragraph (c) of this section. There is no adjustment under paragraph (c) of this section because the net positive adjustment is $0. Accordingly, after the application of paragraph (c) of this section, M's sale of the S share is still a transfer of a loss share and therefore subject to paragraph (d) of this section. Under paragraph (d) of this section, S's attribute reduction amount would be $0, the lesser of the $80 net stock loss and S's $0 aggregate inside loss ($100 of attributes does not exceed the $100 value of all of the S shares). However, because M transferred Asset 2 to S with a view to avoid the purposes of this section, the application of this section to M's transfer of Share 1 is made without regard to the transfer of Asset 2. Accordingly, under paragraph (d) of this section, S's attribute reduction amount is $80, the lesser of the $80 net stock loss and S's $80 aggregate inside loss (computed without regard to Asset 2). S's basis in Asset 1 is therefore reduced by $80, from $100 to $20, under paragraph (d) of this section.

(iii) *Transfer of all S shares.* Assume the same facts as in paragraph (i) of this *Example 5,* except that M sells all five S shares to X, recognizing both the gain and the loss on the S shares. The transfer of Share 1 is still a transfer of a loss share and therefore subject to this section. However, because all the shares are transferred the group's income is clearly reflected. Therefore, the purposes of this section are not avoided and this section applies without modification. S's attribute reduction amount is $0, the lesser of the $0 net stock loss and S's $0 aggregate inside loss.

(h) *Effective/applicability date.* This section applies to transfers of shares of subsidiary stock on or after September 17, 2008 unless the transfer was made pursuant to a binding agreement that was in effect prior to September 17, 2008 and at all times thereafter. For transfers of shares of subsidiary stock that are not subject to this section, see §§ 1.337(d)–2 and 1.1502–35.

■ **Par. 19.** Section 1.1502–75 is amended by:

■ 1. Revising paragraph (d)(1).

■ 2. Adding paragraph (l).

The revision and addition read as follows:

**§ 1.1502–75 Filing of consolidated returns.**

* * * * *

(d) *When a group remains in existence*—(1) *General rule.* A group remains in existence for a tax year if the common parent remains as the common parent and at least one subsidiary that was affiliated with it at the end of the prior year remains affiliated with it at the beginning of the year, whether or not one or more corporations have ceased to be subsidiaries at any time after the group was formed. Thus, for example, assume that corporation P acquires the sole outstanding share of stock of S on January 1, year 1, and that P and S file a consolidated return for the year 1 calendar year. On May 1, year 2, P acquires the sole outstanding share of stock of S1 and, on July 1, year 2, P sells the S share. The group (consisting originally of P and S) remains in existence in year 2 because P remained the common parent and, S, a subsidiary that was affiliated with P at the end of year 1, remained affiliated with P at the beginning of year 2.

* * * * *

(l) *Effective/applicability dates.* Paragraph (d)(1) of this section applies to taxable years for which the due date of the original return (without regard to extensions) is on or after September 17, 2008.

■ **Par. 20.** Section 1.1502–80 is amended by:

■ 1. Revising paragraph (a) and (c)(2).

■ 2. Adding paragraph (h).

The revisions and addition reads as follows:

**§ 1.1502–80 Applicability of other provisions of law.**

(a) *In general*—(1) *Application of other provisions.* The Internal Revenue Code (Code), or other law, shall be applicable to the group to the extent the regulations do not exclude its application. To the extent not excluded, other rules operate in addition to, and may be modified by, these regulations. Thus, for example, in a transaction to which section 381(a) applies, the acquiring corporation will succeed to the tax attributes described in section 381(c). Furthermore, sections 269 and 482 apply for any consolidated return year. However, in a recognition transaction otherwise subject to section 1001, for example, the rules of section 1001 continue to apply, but may be modified by the intercompany transaction regulations under § 1.1502–13.

(2) *No duplicative adjustments.* Nothing in these regulations shall be interpreted or applied to require an adjustment, inclusion, or other item to the extent it would have the effect of duplicating any other adjustment, inclusion, or other item required under the Code or other rule of law, including other provisions of these regulations.

(3) *Application of single-entity principles.* If two or more adjustments, inclusions, or other items are subject to paragraph (a)(2) of this section, the determination of which adjustment, inclusion, or other item is treated as applied or taken into account is made by taking into account the purposes of the provisions and applying single-entity principles as appropriate.

(4) *Effective/applicability dates.* This paragraph (a) is applicable with respect to transactions and determinations on or after September 17, 2008.

* * * * *

(c) * * *

(2) *Cross reference.* See § 1.1502–36 for additional rules relating to worthlessness of subsidiary stock on or after September 17, 2008.

* * * * *

(h) *Non-applicability of section 362(e)(2)*—(1) *General rule.* Section 362(e)(2) does not apply to any intercompany transaction occurring on or after September 17, 2008. Taxpayers may apply this paragraph (h) to intercompany transactions occurring on or after October 22, 2004, and in such case, any election made under section 362(e)(2)(C) will have no effect. The purpose of this paragraph (h) is to facilitate the application of the consolidated return provisions addressing the duplication of loss between members of a consolidated group.

(2) *Anti-abuse rule*—(i) *General rule.* If a taxpayer engages in a transaction to which section 362(e)(2) would apply but for the application of paragraph (h)(1) of this section, and acts with a view to prevent the consolidated return provisions from properly addressing loss duplication, appropriate adjustments will be made to clearly reflect the income of the group.

(ii) *Example.* The following example illustrates the principle of the anti-abuse rule in this paragraph (h)(2).

*Example.* (A) *Facts.* P, the common parent of a consolidated group, owns the four outstanding shares of S stock (Share 1 through Share 4) with an aggregate basis of $0 and value of $80. S owns Asset 1 with a basis of $0 and a value of $80. With a view to prevent the consolidated return provisions from addressing the duplication of loss, P transfers Asset 2 with a basis of $100 and a value of $20 to S in exchange for an additional share of S stock (Share 5) in a transaction to which section 351 applies. P later sells Share 5 to X, an unrelated person, for $20 at a time when S's basis in Asset 2 was still $100. The sale is a transfer of a loss share and therefore subject to § 1.1502–36.

(B) *Analysis.* Although the sale would be subject to § 1.1502–36, that section would not prevent the stock loss or reduce S's attributes (to prevent duplication of the stock loss) because neither § 1.1502–36(b) nor § 1.1502–36(c) would adjust the basis of the transferred share (because there are no investment adjustments) and § 1.1502–36(d) would not reduce S's attributes (because S's aggregate inside loss is $0). However, because P acted with a view to prevent the consolidated return provisions from addressing the duplication of the loss on Asset 2, P's transfer of Asset 2 to S is subject to the anti-abuse rule in this paragraph (h)(2). Accordingly, effective immediately before the transfer of Share 5 to X, either P's basis in Share 5 or S's basis in Asset 2 must be adjusted to reflect what it would have been had section 362(e)(2) been applied at the time P transferred Asset 2 to S (taking into account the interim facts and circumstances). Accordingly, S must either reduce its basis in Asset 2 by $80 to $20 (eliminating the duplicated loss) or P must reduce its basis in Share 5 by $80 to $20 (eliminating the duplicated loss).

(C) *Transfer of all S shares.* Assume the same facts as those in paragraph (A) of this *Example,* except that P sells all five S shares to X. Although P's transfer of Asset 2 to S results in the duplication of an $80 loss, because all the shares are transferred, the transaction does not prevent the consolidated return provisions from properly addressing loss duplication. P's $80 duplicated loss is offset by an $80 duplicated gain, and the group recognizes the offsetting stock gain and loss. Accordingly, this paragraph (h)(2) does not apply to P's transfer of Asset 2 to S.

■ **Par. 21.** Section 1.1502–91 is amended by revising paragraph (h)(2) to read as follows:

**§ 1.1502–91 Application of section 382 with respect to a consolidated group.**

* * * * *

(h) * * *

(2) *Disposition of stock or an intercompany obligation of a member.* Gain or loss recognized by a member on the disposition of stock (including stock described in section 1504(a)(4) and § 1.382–2T(f)(18)(ii) and (iii)) of another member is treated as a recognized gain or loss for purposes of section 382(h)(2) (unless disallowed) even though gain or loss on such stock was not included in the determination of a net unrealized built-in gain or loss under paragraph (g)(1) of this section. Gain or loss recognized by a member with respect to an intercompany obligation is treated as recognized gain or loss only to the extent (if any) the transaction gives rise

to aggregate income or loss within the consolidated group. The first sentence of this paragraph (h)(2) is applicable on or after September 17, 2008.

* * * * *

■ **Par. 22.** Section 1.1502–95 is amended by revising paragraph (d)(3), *Example 6* to read as follows:

**§ 1.1502–95 Rules on ceasing to be a member of a consolidated group (or loss subgroup).**

* * * * *

(d) * * *

(3) * * *

*Example 6. Reattribution of net operating loss carryover under § 1.1502–36(d)(6).* The facts are the same as in *Example 3,* except that, instead of distributing the L2 stock to M, P sells that stock to B, and, under § 1.1502–36(d)(6), M reattributes $10 of L2's net operating loss carryover to itself. Under § 1.1502–36(d)(6)(iv)(A), M succeeds to the reattributed loss as if the loss were succeeded to in a transaction to which section 381(a) applies. M, as successor to L2, does not cease to be a member of the P loss subgroup.

* * * * *

■ **Par. 23.** Section 1.1502–96 is amended by revising paragraph (d) to read as follows:

**§ 1.1502–96 Miscellaneous rules.**

* * * * *

(d) *Losses reattributed under § 1.1502–36(d)(6)*—(1) *In general.* This paragraph (d) contains rules relating to net operating carryovers, capital loss carryovers, and deferred deductions (collectively, loss or losses) that are reattributed to the common parent under § 1.1502–36(d)(6). References in this paragraph (d) to a subsidiary are references to the subsidiary (or lower-tier subsidiary) whose loss is reattributed to the common parent.

(2) *Deemed section 381(a) transaction.* Under § 1.1502–36(d)(6)(iv)(A), the common parent succeeds to the reattributed losses as if the losses were succeeded to in a transaction to which section 381(a) applies. In general, §§ 1.1502–91 through 1.1502–95, this section, and § 1.1502–98 are applied to the reattributed losses in accordance with that characterization. See generally, § 1.382–2(a)(1)(ii) (relating to distributor or transferor loss corporations in transactions under section 381), § 1.1502–1(f)(4) (relating to the definition of predecessor and successor) and § 1.1502–91(j) (relating to predecessor and successor corporations). For example, if the reattributed loss is a pre-change attribute subject to a section 382 limitation, it remains subject to that limitation following the reattribution. In certain cases, the limitation applicable to the reattributed loss is zero unless the common parent apportions all or part of the limitation to itself. (See paragraph (d)(4) of this section.)

(3) *Rules relating to owner shifts*—(i) *In general.* Any owner shift of the subsidiary (including any deemed owner shift resulting from section 382(g)(4)(D) or 382(l)(3)) in connection with the disposition of the stock of the subsidiary is not taken into account in determining whether there is an ownership change with respect to the reattributed loss. However, any owner shift with respect to the successor corporation that is treated as continuing in existence under § 1.382–2(a)(1)(ii) must be taken into account for such purpose if such owner shift is effected by the reattribution and an owner shift of the stock of the subsidiary not held directly or indirectly by the common parent would have been taken into account if such shift had occurred immediately before the reattribution. See paragraph (d)(3)(ii) *Example 2* of this section.

(ii) *Examples.* The following examples illustrate the principles of this paragraph (d)(3):

*Example 1. No owner shift for reattributed loss.* (i) *Facts.* P, the common parent of a consolidated group, owns 60% of the stock of L, and B owns the remaining 40%. L has a net operating loss carryover of $100 from year 1 that it carries over to years 2, 3, and 4. At the beginning of year 2, P purchases 40% of the L stock from B, which does not cause an ownership change of L. On December 31, year 3, P sells all of the L stock to M. Pursuant to § 1.1502–36(d)(6), P reattributes $10 of L's $100 net operating loss carryover to itself, and L carries $90 of its net operating loss carryover to its year 4.

(ii) *Analysis.* The sale of the L stock to M does not cause an owner shift that is taken into account in determining if there is an ownership change with respect to the $10 reattributed loss. Following the reattribution, § 1.1502–94(b) continues to apply to determine if there is an ownership change with respect to the $10 reattributed loss, until, under paragraph (a) of this section, the loss is treated as described in § 1.1502–91(c)(1)(i). In applying § 1.1502–94(b), the 40 percentage point increase by the P shareholders prior to the reattribution is taken into account. The sale of the L stock to M does cause an ownership change of L with respect to the $90 of its net operating loss that it carries over to year 4.

*Example 2. Owner shift for reattributed loss.* The facts are the same as in *Example 1,* except that P only purchases 20% of the L stock from B and sells 80% of the L stock to M. L is a new loss member, and, under § 1.1502–94(b)(1), an owner shift of the stock of L not held directly or indirectly by the common parent (the 20% of L stock still held by B) would have been taken into account if such shift had occurred immediately before the reattribution. Following the reattribution, § 1.1502–94(b) continues to apply to determine if there is an ownership change with respect to the $10 reattributed loss, until, under paragraph (a) of this section, the loss is treated as described in § 1.1502–91(c)(1)(i). With respect to the $10 reattributed loss, the P shareholders have increased their percentage ownership interest by 40 percentage points. The P shareholders have increased their ownership interests by 20 percentage points as a result of P's purchase of stock from B, and, under § 1.382–2(a)(1)(ii), are treated as increasing their interests by an additional 20 percentage points as a result of the reattribution. (The acquisition of the L stock by M does not, however, effect an owner shift for the $10 of reattributed loss.) The sale of the L stock to M causes an ownership change of L with respect to the $90 of net operating loss that L carries over to Year 4.

(4) *Rules relating to the section 382 limitation*—(i) *Reattributed loss is a pre-change separate attribute of a new loss member.* If the reattributed loss is a pre-change separate attribute of a new loss member that is subject to a separate section 382 limitation prior to the disposition of subsidiary stock, the common parent's limitation with respect to that loss is zero, except to the extent that the common parent apportions to itself, under paragraph (d)(5) of this section, all or part of such limitation. A separate section 382 limitation is the limitation described in § 1.1502–94(b) that applies to a pre-change separate attribute.

(ii) *Reattributed loss is a pre-change subgroup attribute.* If the reattributed loss is a pre-change subgroup attribute subject to a subgroup section 382 limitation prior to the disposition of subsidiary stock, and, immediately after the reattribution, the common parent is not a member of the loss subgroup, the section 382 limitation with respect to that loss is zero, except to the extent that the common parent apportions to itself, under paragraph (d)(5) of this section, all or part of the subgroup section 382 limitation. See, however, § 1.1502–95(d)(3) *Example 6*, for an illustration of a case where the common parent, as successor to the subsidiary, is a member of the loss subgroup immediately after the reattribution.

(iii) *Potential application of section 382(l)(1).* In general, the value of the stock of the common parent is used to determine the section 382 limitation for an ownership change with respect to the reattributed loss that occurs at the time of, or after, the reattribution. For example, if the loss is a pre-change consolidated attribute, the value of the stock of the common parent is used to determine the section 382 limitation, and no adjustment to that value is required because of the deemed section

381(a) transaction. However, if the loss is a pre-change separate attribute of a new loss member (or is a pre-change attribute of a loss subgroup member and the common parent was not the loss subgroup parent immediately before the reattribution), the deemed section 381(a) transaction is considered to constitute a capital contribution with respect to the new loss member (or loss subgroup member) for purposes of section 382(l)(1). Accordingly, if that section applies because the deemed capital contribution is (or is considered under section 382(l)(1)(B) to be) part of a plan described in section 382(l)(1)(A), the value of the stock of the common parent after the deemed section 381(a) transaction must be adjusted to reflect the capital contribution. Ordinarily, this will require the value of the stock of the common parent to be reduced to an amount that represents the value of the stock of the subsidiary (or loss subgroup of which the subsidiary was a member) when the reattribution occurred.

(iv) *Duplication or omission of value.* In determining any section 382 limitation with respect to the reattributed loss and with respect to other pre-change losses, appropriate adjustments must be made so that value is not improperly omitted or duplicated as a result of the reattribution. For example, if the subsidiary has an ownership change upon its departure, and the common parent (as successor) has an ownership change with respect to the reattributed pre-change separate attribute upon its reattribution under paragraph (d)(3)(i) of this section, proper adjustments must be made so that the value of the subsidiary is not taken into account more than once in determining the section 382 limitation for the reattributed loss and the loss that is not reattributed.

(v) *Special rule for continuity of business requirement.* If the reattributed loss is a pre-change attribute of new loss member and the reattribution occurs within the two-year period beginning on the change date, then, starting immediately after the reattribution, the continuity of business requirement of section 382(c)(1) is applied with respect to the business enterprise of the common parent. Similar principles apply if the reattributed loss is a pre-change subgroup attribute and, on the day after the reattribution, the common parent is not a member of the loss subgroup.

(5) *Election to reattribute section 382 limitation*—(i) *Effect of election.* The common parent may elect to apportion to itself all or part of any separate section 382 limitation or subgroup section 382 limitation to which the loss is subject immediately before the reattribution. However, no net unrealized built-in gain of the member (or loss subgroup) whose loss is reattributed can be apportioned to the common parent. The principles of § 1.1502–95(c) apply to the apportionment, treating, as the context requires, references to the former member as references to the common parent, and references to the consolidated section 382 limitation as references to the separate section 382 limitation (or subgroup section 382 limitation) that is being apportioned. Thus, for example, the common parent can reattribute to itself all or part of the value element or adjustment element of the limitation, and any part of such element that is apportioned requires a corresponding reduction in such element of the separate section 382 limitation of the subsidiary whose loss is reattributed (or in the subgroup section 382 limitation if the reattributed loss is a pre-change subgroup attribute). Appropriate adjustments must be made to the separate section 382 limitation (or subgroup section 382 limitation) for the consolidated return year in which the reattribution is made to reflect that the reattributed loss is an attribute acquired by the common parent during the year in a transaction to which section 381(a) applies. The election is made by the common parent as part of the election to reattribute the loss. See § 1.1502–36(e)(5)(x) for the time and manner of making the election.

(ii) *Examples.* The following examples illustrate the principles of this paragraph (d)(5):

*Example 1. Consequence of apportionment.* (i) Facts. P, the common parent of a consolidated group, purchases all of the stock of L on December 31, year 1. L carries over a net operating loss arising in year 1 to each of the next 5 taxable years. The purchase of the L stock causes an ownership change of L, and results in a separate section 382 limitation of $10 for L's net operating loss carryover based on the value of the L stock. On July 2, year 3, P sells 30% of the L stock to A. Under § 1.1502–36(d)(6), P elects to reattribute to itself $110 of L's $200 net operating loss carryover. P also elects to apportion to itself $6 of the $10 value element of the separate section 382 limitation.

(ii) *Analysis.* (A) *P's separate section 382 limitation.* For the consolidated return years ending after December 31, year 3, P's separate section 382 limitation with respect to the reattributed net operating loss carryover is $6, adjusted as appropriate for any short taxable year, unused section 382 limitation, or other adjustment. For the P group's consolidated return year ending December 31, year 3, the separate section 382 limitation for L's net operating loss carryover is $8, the sum of $5 and $3. Five dollars of the limitation is the amount that bears the same relationship to $10 as the number of days in the period ending with the deemed section 381(a) transaction, 183 days, bears to 365. Three dollars of the limitation is the amount that bears the same relationship to $6 as the number of days in the period between July 3 and December 31, 182, bears to 365.

(B) *L's separate section 382 limitation.* For L's taxable years ending after December 31, year 3, L's separate section 382 limitation for its $90 of net operating loss carryover that was not reattributed to P is $4, adjusted as appropriate for any short taxable year, unused section 382 limitation, or other adjustment. For L's short taxable year ending December 31, year 3, the section 382 limitation for its $90 of net operating loss carryover is $2, the amount that bears the same relationship to $4 (the portion of the value element that was not apportioned to P), as the number of days during the short taxable year, 182 days, bears to 365. See § 1.382–5(c).

*Example 2. No apportionment required for consolidated pre-change attribute.* (i) *Facts.* P, the common parent of a consolidated group, forms L. For year 1, L has an operating loss of $70 that is not absorbed and is included in the group's consolidated net operating loss that is carried over to subsequent years. On January 1 of year 3, A buys all of the P stock and the P group has an ownership change. The consolidated section 382 limitation based on the value of the P stock is $10.

(ii) *Analysis.* On April 13 of year 4, P sells all of the stock of L to B and, under § 1.1502–36(d)(6), elects to reattribute to itself $45 of L's net operating loss carryover. Following the reattribution, the $45 portion of the year 1 net operating loss carryover retains its character as a pre-change consolidated attribute, and remains subject to so much of the $10 consolidated section 382 limitation as P does not elect to apportion to L under § 1.1502–95(c).

* * * * *

■ **Par. 24.** Section 1.1502–99 is amended by revising the section heading and paragraph (b)(4) to read as follows:

**§ 1.1502–99 Effective/applicability dates.**

* * * * *

(b) * * *

(4) *Reattribution of losses under § 1.1502–36(d)(6).* Section 1.1502–96(d) applies to reattributions of net operating loss carryovers, capital loss carryovers, and deferred deductions in connection with a transfer of stock to which § 1.1502–36 applies, and the election under § 1.1502–96(d)(5) (relating to an election to reattribute section 382 limitation) can be made with an election under § 1.1502–36(d)(6) to reattribute a loss to the common parent that is filed at the time and in the manner provided in § 1.1502–36(e)(5)(x).

* * * * *

■ **Par. 25.** For each section listed in the tables, remove the language in the

''Remove'' column and add in its place the language in the ''Add'' column as set forth below:

| Section | Remove | Add |
|---|---|---|
| § 1.267(f)–1(k) | For additional rules applicable to the disposition or deconsolidation of the stock of members of consolidated groups, see §§ 1.337(d)–2, 1.1502–13(f)(6), and 1.1502–35.. | For additional rules applicable to the disposition, deconsolidation, or transfer of the stock of members of consolidated groups, see §§ 1.337(d)–2, 1.1502–13(f)(6), 1.1502–35, and 1.1502–36. |
| § 1.597–4(g)(2)(v), second parenthetical | §§ 1.337(d)–2 and 1.1502–35(f) | § 1.337(d)–2, § 1.1502–35(f), and § 1.1502–36. |
| § 1.1502–11(b)(3)(ii), paragraph (c) in *Example* | §§ 1.337(d)–2 and 1.1502–35 | §§ 1.337(d)-2, 1.1502–35, and 1.1502–36. |
| § 1.1502–12(r) | §§ 1.337(d)–2 and 1.1502–35(f) for rules relating to basis adjustments and allowance of stock loss on dispositions of stock of a subsidiary member. | §§ 1.337(d)–2, 1.1502–35, and 1.1502–36 for rules relating to basis adjustments and allowance of stock loss on dispositions or transfers of subsidiary stock. |
| § 1.1502–15(b)(2)(iii) | §§ 1.337(d)–2, 1.1502–35, or | § 1.337(d)–2, § 1.1502–35, § 1.1502–36, or |
| § 1.1502–21(b)(2)(iv)(B)(*2*)(*i*) | (b)(2)(iv)(B)(*2*)(*iv*) | (b)(2)(iv)(B)(*2*)(*v*). |
| § 1.1502–21(b)(2)(iv)(B)(*2*)(*ii*) | (b)(2)(iv)(B)(*2*)(*iv*) | (b)(2)(iv)(B)(*2*)(*v*). |
| § 1.1502–21(b)(2)(iv)(B)(*2*)(*iii*). | (b)(2)(iv)(B)(*2*)(*iv*) | (b)(2)(iv)(B)(*2*)(*v*). |
| § 1.1502–90 Table of Contents, under § 1.1502–96(d). | § 1.1502–20(g) | § 1.1502–36(d)(6). |
| § 1.1502–90 Table of Contents, under § 1.1502–99(b)(4). | § 1.1502–20(g) | § 1.1502–36(d)(6). |

## PART 602—OMB CONTROL NUMBERS UNDER THE PAPERWORK REDUCTION ACT

■ **Par. 26.** The authority citation for part 602 continues to read as follows:

**Authority:** 26 U.S.C. 7805.

■ **Par. 27.** In § 602.101, paragraph (b) is amended as follows:

■ 1. The following entries to the table are removed:

**§ 602.101 OMB Control Numbers.**

* * * * *

(b) * * *

| CFR part or section where identified anddescribed | Current OMB Control no. |
|---|---|
| * * * * * | |
| § 1.1502–20 | 1545–1160; 1545–1218 |
| § 1.1502–20T | 1545–1774 |
| § 1.1502–32T | 1545–1774 |
| § 1.1502–35T | 1545–2019 |

■ 2. The following entry is added in numerical order to the table:

**§ 602.101 OMB Control Numbers.**

* * * * *

(b) * * *

| CFR part or section where identified and described | Current OMB Control No. |
|---|---|
| * * * * * | |
| § 1.1502–36 | 1545–2096 |

* * * * *

**Linda E. Stiff,**

*Deputy Commissioner for Services and Enforcement.*

Approved: September 4, 2008.

**Eric Solomon,**

*Assistant Secretary of the Treasury (Tax Policy).*

[FR Doc. E8–21006 Filed 9–9–08; 4:15 pm]

BILLING CODE 4830–01–P

Federal Register

Wednesday,
September 17, 2008

# Part III

# Department of Defense
# General Services Administration
# National Aeronautics and Space Administration

**48 CFR Chapter 1, Parts 2, 4, et al.**

**Federal Acquisition Regulations; Final Rules, Interim Rules, and Small Entity Compliance Guide**

**DEPARTMENT OF DEFENSE**

**GENERAL SERVICES ADMINISTRATION**

**NATIONAL AERONAUTICS AND SPACE ADMINISTRATION**

**48 CFR Chapter 1**

**[Docket FAR 2008–0003, Sequence 2]**

## Federal Acquisition Regulation; Federal Acquisition Circular 2005–27; Introduction

**AGENCIES:** Department of Defense (DoD), General Services Administration (GSA), and National Aeronautics and Space Administration (NASA).

**ACTION:** Summary presentation of rules.

**SUMMARY:** This document summarizes the Federal Acquisition Regulation (FAR) rules agreed to by the Civilian Agency Acquisition Council and the Defense Acquisition Regulations Council in this Federal Acquisition Circular (FAC) 2005–27. A companion document, the Small Entity Compliance Guide (SECG), follows this FAC. The FAC, including the SECG, is available via the Internet at *http://www.regulations.gov*.

**DATES:** For effective dates and comment dates, see separate documents, which follow.

**FOR FURTHER INFORMATION CONTACT:** The analyst whose name appears in the table below in relation to each FAR case. Please cite FAC 2005–27 and the specific FAR case numbers. For information pertaining to status or publication schedules, contact the FAR Secretariat at (202) 501–4755.

LIST OF RULES IN FAC 2005–27

| Item | Subject | FAR case | Analyst |
|---|---|---|---|
| I | Correcting Statutory References Related to theHigher Education Act of 1965 | 2007–020 | Cundiff. |
| II | Changing the Name of the Office of Small andDisadvantaged Business Utilization for DoD | 2008–001 | Cundiff. |
| III | Administrative Changes to the FPI Blanket Waiver and the JWOD Program Name | 2007–015 | Clark. |
| IV | Local Community Recovery Act of 2006 | 2006–014 | Clark. |
| V | Additional Requirements for Competition Advocate AnnualReports | 2007–007 | Woodson. |
| VI | Contract Debts | 2005–018 | Murphy. |
| VII | Subcontractor Requests for Bonds | 2007–022 | Jackson. |
| VIII | Extension of Authority for Use of Simplified Acquisition Procedures for Certain Commercial Items. | 2008–002 | Jackson. |
| IX | Enhanced Competition for Task and Delivery OrderContracts—Section 843 of the Fiscal Year 2008 National Defense Authorization Act(Interim). | 2008–006 | Clark. |
| X | Online Representations and Certifications ApplicationReview | 2006–025 | Woodson. |
| XI | Cost Accounting Standards (CAS) Administration andAssociated Federal Acquisition Regulation Clauses (Interim). | 2007–002 | Chambers. |
| XII | CAS Administration | 2006–004 | Chambers. |
| XIII | Accepting and Dispensing of $1 Coin | 2006–027 | Jackson. |
| XIV | Technical Amendments | | |

**SUPPLEMENTARY INFORMATION:** Summaries for each FAR rule follow. For the actual revisions and/or amendments to these FAR cases, refer to the specific item number and subject set forth in the documents following these item summaries.

FAC 2005–27 amends the FAR as specified below:

### Item I—Correcting Statutory References Related to the Higher Education Act of 1965 (FAR Case 2007–020)

This final rule amends the Federal Acquisition Regulation to reflect the correct public law citations for the definitions of minority institution and Hispanic-serving institution. The citations changed when the Higher Education Act of 1965 was amended by the Higher Education Amendments of 1998.

### Item II—Changing the Name of the Office of Small and Disadvantaged Business Utilization for DoD (FAR Case 2008–001)

This final rule amends the Federal Acquisition Regulation to change the name of the ''Office of Small and Disadvantaged Business Utilization'' to the ''Office of Small Business Programs'' for the Department of Defense. Section 904 of the National Defense Authorization Act for Fiscal Year 2006, Pub. L. 109–163, re-designated the ''Office of Small and Disadvantaged Business Utilization''.

### Item III—Administrative Changes to the FPI Blanket Waiver and the JWOD Program Name (FAR Case 2007–015)

This final rule amends the language in the Federal Acquisition Regulation to increase the blanket waiver threshold for small dollar-value purchases from Federal Prison Industries by Federal agencies and also changes the name of the JWOD Program to the AbilityOne Program. These changes are administrative in nature and any impact will be minimal.

### Item IV—Local Community Recovery Act of 2006 (FAR Case 2006–014)

The Civilian Agency Acquisition Council and the Defense Acquisition Regulations Council have adopted as final, with a minor change to the second interim rule, two interim rules amending the Federal Acquisition Regulation (FAR) to implement amendments to the Robert T. Stafford Disaster Relief and Emergency Assistance Act. The first interim rule was published in the **Federal Register** at 71 FR 44546, August 4, 2006. The second interim rule was published in the **Federal Register** at 72 FR 63084, November 7, 2007.

### Item V—Additional Requirements for Competition Advocate Annual Reports (FAR Case 2007–007)

This final rule amends the Federal Acquisition Regulation 6.502 to require that annual reviews by executive agency competition advocates be provided in writing to both the agency senior procurement executive and the agency chief acquisition officer, and ensure task and delivery orders over $1,000,000 issued under multiple award contracts are properly planned, issued, and comply with 8.405 and 16.505. The rule provides for one of several initiatives by the Administrator, Office of Federal

Procurement Policy, to reinforce the use of competition and related practices for achieving a competitive environment. The rule reinvigorates the role of agencies' competition advocates, strengthens agencies' competition practices, and ensures best value for the taxpayer.

**Item VI—Contract Debts (FAR Case 2005–018)**

This final rule amends and reorganizes FAR Subpart 32.6, Contract Debts, and amends associated other FAR coverage, based on the recommendations of the Department of Defense Contract Debt Integrated Process Team, to improve contract debt controls and procedures and to ensure consistency within and between existing regulations. FAR Subpart 32.6 prescribes policies and procedures for identifying, collecting, and deferring collection of contract debts (including interest, if applicable). Throughout, the term ''responsible official'' has been replaced with the specific individual/organization responsible for fulfilling the FAR requirement. FAR 32.601 is revised to specify what constitutes a contract debt, rather than how a contract debt may arise. All discussions of contract debt determinations are consolidated in FAR 32.603, including the responsibility of the contracting officer in making debt determinations. All discussions of the demand for payment are consolidated in FAR 32.604, including the requirements for demand letters. All discussions of final decisions are consolidated in FAR 32.605. FAR 32.606 includes all coverage on debt collections, including when responsibility should be transferred to the Department of Treasury. All discussions of interest are consolidated at FAR 32.608, including how to compute interest. The Government's right to make a demand for payment and start the interest clock running under the contract is ensured, as is the Government's right to make a demand for payment without first issuing a final decision of the contracting officer. A final decision is required only if the contractor disagrees with the demand for payment.

**Item VII—Subcontractor Requests for Bonds (FAR Case 2007–022)**

This final rule amends the list of laws inapplicable to commercial items, to clarify that the existing regulations at FAR 28.106–4, Contract clause, and 52.228–12, Prospective Subcontractor Requests for Bonds, do not apply to commercial items. Section 806(a)(3) of Pub. L. 102–190, as amended by Sections 2091 and 8105 of Pub. L. 103–355 will be included in the list at FAR 12.503(a) and 12.504(a).

**Item VIII—Extension of Authority for Use of Simplified Acquisition Procedures for Certain Commercial Items (FAR Case 2008–002)**

This final rule amends the Federal Acquisition Regulation to implement Section 822 of the National Defense Authorization Act for Fiscal Year 2008 (Pub. L. 110–181). Section 822 amends Section 4202(e) of the Clinger-Cohen Act of 1996 (division D of Pub. L. 104–106; 110 Stat. 652; 10 U.S.C. 2304 note) by extending until January 1, 2010, the timeframe in which an agency may use simplified procedures to purchase commercial items in amounts greater than the simplified acquisition threshold, but not exceeding $5,500,000 ($11 million for acquisitions as described in 13.500(e)).

**Item IX—Enhanced Competition for Task and Delivery Order Contracts—Section 843 of the Fiscal Year 2008 National Defense Authorization Act (FAR Case 2008–006) (Interim)**

This interim rule amends Federal Acquisition Regulation Subpart 16.5 to implement Section 843 of the Fiscal Year 2008 National Defense Authorization Act (Pub. L. 110–181). The provisions of Section 843 include: (1) Limitation on single award task or delivery order (Indefinite-Delivery Requirements, and Indefinite-Quantity) type contracts greater than $100 million; (2) Enhanced competition for task and delivery orders in excess of $5 million; and (3) Protest on orders on the grounds that the order increases the scope, period, maximum value of the contract under which the order is issued; or valued in excess of $10 million. FAR sections 16.503 and 16.504, as amended by this rule, are applicable to single award task or delivery order contracts awarded on or after May 27, 2008. FAR section 16.505, as amended by this rule, is applicable to orders awarded on or after May 27, 2008 on existing contracts as well as new contracts.

**Item X—Online Representations and Certifications Application Review (FAR Case 2006–025)**

This final rule adopts as final, without change, the interim rule published in the **Federal Register** at 72 FR 46359, August 17, 2007. The rule amends FAR 23.406 and 23.906 to revise the prescriptions for the use of 52.223–9 and 52.223–14 to provide for their use under the same circumstances as the prescription for use of their associated provisions. These revisions ensure compliance with the requirements of 40 CFR part 247 and 42 U.S.C. 11023.

**Item XI—Cost Accounting Standards (CAS) Administration and Associated Federal Acquisition Regulation Clauses (FAR Case 2007–002) (Interim)**

The subject case is revising the Federal Acquisition Regulation (FAR) clauses concerning the administration of Cost Accounting Standards (CAS) to maintain consistency between the CAS rules and the FAR.

**Item XII—CAS Administration (FAR Case 2006–004)**

This final rule adopts, with minor changes, the proposed rule published in the **Federal Register** at 71 FR 58338, October 3, 2006, amending the Federal Acquisition Regulation to implement revisions to the regulations related to the administration of the Cost Accounting Standards as they pertain to contracts with foreign concerns, including United Kingdom concerns.

**Item XIII—Accepting and Dispensing of $1 Coin (FAR Case 2006–027)**

This final rule adopts, with change, the interim rule published in the **Federal Register** at 72 FR 46361, August 17, 2007. This final rule implements the Presidential $1 Coin Act of 2005 (Pub. L. 109–145). The Presidential $1 Coin Act of 2005 requires the Secretary of the Treasury to mint and issue annually four new $1 coins bearing the likenesses of the Presidents of the United States in the order of their service and to continue to mint and issue ''Sacagawea-design'' coins for circulation. In order to promote circulation of the coins, Section 104 of the Public Law also requires that Federal agencies take action so that, by January 1, 2008, entities that operate any business, including vending machines, on any premises owned by the United States or under the control of any agency or instrumentality of the United States, are capable of accepting and dispensing $1 coins and that the entities display notices of this capability on the business premises. Pub. L. 110–147 was enacted to amend Section 5112(p)(1)(A) of Title 31, United States Code, to allow an exception from the $1 coin dispensing capability requirement for those vending machines that do not receive currency denominations greater than $1. Contracting officers have been instructed in the Applicability Date of the preamble to modify contracts upon request of the contractor, to change the older version of the clause to the newer version without requiring consideration from the contractor.

**Item XIV—Technical Amendments**

Editorial changes are made at FAR 15.404–1 and 52.212–5.

Dated: September 9, 2008

**Al Matera,**

*Director, Office of Acquisition Policy.*

**Federal Acquisition Circular**

Federal Acquisition Circular (FAC) 2005–27 is issued under the authority of the Secretary of Defense, the Administrator of General Services, and the Administrator for the National Aeronautics and Space Administration.

Unless otherwise specified, all Federal Acquisition Regulation (FAR) and other directive material contained in FAC 2005–27 is effective October 17, 2008, except for Items VII, VIII, IX, X, XIII, and XIV which are effective September 17, 2008.

Dated: September 5, 2008.

**Shay D. Assad,**

*Director, Defense Procurement and Acquisition Policy.*

Dated: September 8, 2008.

**David A. Drabkin,**

*Senior Procurement Executive & Deputy Chief Acquisition Officer, Office of the Chief Acquisition Officer, U.S. General Services Administration.*

Dated: August 26, 2008.

**William P. McNally,**

*Assistant Administrator for Procurement, National Aeronautics and Space Administration.*

[FR Doc. E8–21383 Filed 9–16–08; 8:45 am]

BILLING CODE 6820–EP–S

## DEPARTMENT OF DEFENSE

## GENERAL SERVICES ADMINISTRATION

## NATIONAL AERONAUTICS AND SPACE ADMINISTRATION

## 48 CFR Parts 2 and 52

**[FAC 2005–27; FAR Case 2007–020; Item I; Docket 2008–0001; Sequence 15]**

**RIN 9000–AL06**

## Federal Acquisition Regulation; FAR Case 2007–020, Correcting Statutory References Related to the Higher Education Act of 1965

**AGENCIES:** Department of Defense (DoD), General Services Administration (GSA), and National Aeronautics and Space Administration (NASA).

**ACTION:** Final rule.

**SUMMARY:** The Civilian Agency Acquisition Council and the Defense Acquisition Regulations Council (Councils) have agreed on a final rule amending the Federal Acquisition Regulation (FAR) to correct references to sections of the Higher Education Act of 1965 at FAR 2.101 and 52.2. These sections of the Act contain the definitions of minority institution and Hispanic-serving institution. The citations for these sections changed when the Higher Education Act of 1965 was amended by the Higher Education Amendments of 1998. This final rule updates the FAR accordingly.

**DATES:** *Effective Date*: October 17, 2008.

**FOR FURTHER INFORMATION CONTACT:** Ms. Rhonda Cundiff, Procurement Analyst, at (202) 501–0044, for clarification of content. For information pertaining to status or publication schedules, contact the Regulatory Secretariat at (202) 501–4755. Please cite FAC 2005–27, FAR case 2007–020.

**SUPPLEMENTARY INFORMATION:**

### A. Background

The definition of ''minority institution'' had been found in section 1046 of the Higher Education Act of 1965 (HEA) and at 20 U.S.C. 1135d–5(3). The Higher Education Amendments of 1998 redesignated section 1046 of the HEA as section 365.

The Hispanic-serving Institution Program was authorized in section 316 of Title III of the HEA, as amended by 1992 amendments. In the Higher Education Amendments of 1998, Pub. L. 105–244, the Hispanic-serving institution Program was moved into Title V of the HEA and reenacted, in that title, with all the relevant provisions that governed that program while it was part of Title III of the HEA. This final rule reflects these changes.

This is not a significant regulatory action and, therefore, was not subject to review under Section 6(b) of Executive Order 12866, Regulatory Planning and Review, dated September 30, 1993. This rule is not a major rule under 5 U.S.C. 804.

### B. Regulatory Flexibility Act

The Regulatory Flexibility Act does not apply to this rule. This final rule does not constitute a significant FAR revision within the meaning of FAR 1.501 and Pub. L. 98–577, and publication for public comments is not required. However, the Councils will consider comments from small entities concerning the affected FAR Parts 2 and 52 in accordance with 5 U.S.C. 610. Interested parties must submit such comments separately and should cite 5 U.S.C. 601, *et seq.* (FAC 2005–27, FAR case 2007–020, in correspondence.)

### C. Paperwork Reduction Act

The Paperwork Reduction Act does not apply because the changes to the FAR do not impose information collection requirements that require the approval of the Office of Management and Budget under 44 U.S.C. 3501, *et seq.*

**List of Subjects in 48 CFR Parts 2 and 52**

Government procurement.

Dated: September 9, 2008.

**Al Matera,**

*Director, Office of Acquisition Policy.*

■ Therefore, DoD, GSA, and NASA amend 48 CFR parts 2 and 52 as set forth below:

■ 1. The authority citation for 48 CFR parts 2 and 52 continues to read as follows:

**Authority:** 40 U.S.C. 121(c); 10 U.S.C. chapter 137; and 42 U.S.C. 2473(c).

## PART 2—DEFINITIONS OF WORDS AND TERMS

■ 2. Amend section 2.101 in paragraph (b)(2) by revising the definition ''Minority Institution'' to read as follows:

**2.101 Definitions.**

* * * * *

(b) * * *

(2) * * *

*Minority Institution* means an institution of higher education meeting the requirements of Section 365(3) of the Higher Education Act of 1965 (*20 U.S.C. 1067k*), including a Hispanic-serving institution of higher education, as defined in Section 502(a) of the Act (*20 U.S.C. 1101a*).

* * * * *

## PART 52—SOLICITATION PROVISIONS AND CONTRACT CLAUSES

■ 3. Amend section 52.212–5 by revising the date of the clause and paragraph (b)(11)(i) to read as follows:

**52.212–5 Contract Terms and Conditions Required to Implement Statutes or Executive Orders—Commercial Items.**

* * * * *

CONTRACT TERMS AND CONDITIONS REQUIRED TO IMPLEMENT STATUTES OR EXECUTIVE ORDERS—COMMERCIALS ITEMS (OCT 2008)

* * * * *

(b) * * *

____ (11)(i) *52.219–23*, Notice of Price Evaluation Adjustment for Small Disadvantaged Business Concerns (OCT 2008) (10 U.S.C. 2323)(if the offeror elects to waive the adjustment, it shall so indicate in its offer.)

* * * * *

■ 4. Amend section 52.219–23 by revising the date of the clause and in paragraph (a) the definition ''Minority institution'' to read as follows:

**52.219–23 Notice of Price Evaluation Adjustment for Small Disadvantaged Business Concerns.**

* * * * *

NOTICE OF PRICE EVALUATION ADJUSTMENT FOR SMALL DISADVANTAGED BUSINESS CONCERNS (OCT 2008)

(a) * * *

*Minority institution* means an institution of higher education meeting the requirements of Section 365(3) of the Higher Education Act of 1965 (*20 U.S.C. 1067k*), including a Hispanic-serving institution of higher education, as defined in Section 502(a) of the Act (*20 U.S.C. 1101a*).

* * * * *

■ 5. Amend section 52.226–2 by revising the date of the provision and in paragraph (a) the definition ''Minority institution'' to read as follows:

**52.226–2 Historically Black College or University and Minority Institution Representation.**

* * * * *

HISTORICALLY BLACK COLLEGE OR UNIVERSITY AND MINORITY INSTITUTION REPRESENTATION (OCT 2008)

(a) * * *

*Minority institution* means an institution of higher education meeting the requirements of Section 365(3) of the Higher Education Act of 1965 (*20 U.S.C. 1067k*), including a Hispanic-serving institution of higher education, as defined in Section 502(a) of the Act (*20 U.S.C. 1101a*).

* * * * *

[FR Doc. E8–21384 Filed 9–16–08; 8:45 am]

BILLING CODE 6820–EP–S

## DEPARTMENT OF DEFENSE

## GENERAL SERVICES ADMINISTRATION

## NATIONAL AERONAUTICS AND SPACE ADMINISTRATION

## 48 CFR Parts 2 and 19

**[FAC 2005–27; FAR Case 2008–001; Item II; Docket 2008–001; Sequence 12]**

**RIN 9000–AL04**

## Federal Acquisition Regulation; FAR Case 2008–001, Changing the Name of the Office of Small and Disadvantaged Business Utilization for DoD

**AGENCIES:** Department of Defense (DoD), General Services Administration (GSA), and National Aeronautics and Space Administration (NASA).

**ACTION:** Final rule.

**SUMMARY:** The Civilian Agency Acquisition Council and the Defense Acquisition Regulations Council (Councils) have agreed on a final rule amending the Federal Acquisition Regulation (FAR) to change the name of the ''Office of Small and Disadvantaged Business Utilization'' to the ''Office of Small Business Programs'' for the Department of Defense.

**DATES:** *Effective Date: October 17, 2008.*

**FOR FURTHER INFORMATION CONTACT** Ms. Rhonda Cundiff, Procurement Analyst, at (202) 501–0044 for clarification of content. For information pertaining to status or publication schedules, contact the FAR Secretariat at (202) 501–4755. Please cite FAC 2005–27, FAR case 2008–001.

**SUPPLEMENTARY INFORMATION:**

### A. Background

Section 904 of the National Defense Authorization Act for Fiscal Year 2006, Public Law 109–163, re-designated the ''Office of Small and Disadvantaged Business Utilization'' to the ''Office of Small Business Programs'' for the Department of Defense, and the Departments of the Army, the Navy, and the Air Force. The office name change, as well as the change in the title of the director of the office, must be noted in the FAR. This case amends the FAR to make the necessary changes.

This is not a significant regulatory action and therefore, was not subject to review under Section 6(b) of Executive Order 12866, Regulatory Planning and Review, dated September 30, 1993. This rule is not a major rule under 5 U.S.C. 804.

### B. Regulatory Flexibility Act

The Regulatory Flexibility Act does not apply to this rule. This final rule does not constitute a significant FAR revision within the meaning of FAR 1.501 and Public Law 98–577, and publication for public comments is not required. However, the Councils will consider comments from small entities concerning the affected FAR Parts 2 and 19 in accordance with 5 U.S.C. 610. Interested parties must submit such comments separately and should cite 5 U.S.C. 601, *et seq.* (FAC 2005–27, FAR case 2008–001), in correspondence.

### C. Paperwork Reduction Act

The Paperwork Reduction Act does not apply because the changes to the FAR do not impose information collection requirements that require the approval of the Office of Management and Budget under 44 U.S.C. 3501, *et seq.*

### List of Subjects in 48 CFR Parts 2 and 19

Government procurement.

Dated: September 9, 2008.

**Al Matera,**

*Director, Office of Acquisition Policy.*

■ Therefore, DoD, GSA, and NASA amend 48 CFR parts 2 and 19 as set forth below:

■ 1. The authority citation for 48 CFR parts 2 and 19 continues to read as follows:

**Authority:** 40 U.S.C. 121(c); 10 U.S.C. chapter 137; and 42 U.S.C. 2473(c).

## PART 2—DEFINITIONS OF WORDS AND TERMS

■ 2. Amend section 2.101 in paragraph (b)(2) by adding, in alphabetical order, the definition ''Office of Small and Disadvantaged Business Utilization'' to read as follows:

**2.101 Definitions.**

* * * * *

(b) * * *

(2) * * *

*Office of Small and Disadvantaged Business Utilization* means the Office of Small Business Programs when referring to the Department of Defense.

* * * * *

## PART 19—SMALL BUSINESS PROGRAMS

■ 3. Amend section 19.201 by revising the introductory text of paragraph (d) and paragraph (d)(1) to read as follows:

**19.201 General policy.**

* * * * *

(d) The Small Business Act requires each agency with contracting authority to establish an Office of Small and Disadvantaged Business Utilization (see section (k) of the Small Business Act). For the Department of Defense, in accordance with the National Defense Authorization Act for Fiscal Year 2006 (Public Law 109–163), the Office of Small and Disadvantaged Business Utilization has been redesignated as the Office of Small Business Programs. Management of the office shall be the responsibility of an officer or employee of the agency who shall, in carrying out the purposes of the Act—

(1) Be known as the Director of Small and Disadvantaged Business Utilization, or for the Department of Defense, the Director of Small Business Programs;

* * * * *

■ 3. Amend section 19.702 by revising the second and third sentences of paragraph (d) to read as follows:

**19.702 Statutory requirements.**

* * * * *

(d) * * * However, the mentor-protégé agreement must have been approved by the Director, Small Business Programs of the cognizant DoD military department or defense agency, before developmental assistance costs may be credited against subcontract goals. A list of approved agreements may be obtained at *http://www.acq.osd.mil/osbp/mentor_protege/*.

[FR Doc. E8–21385 Filed 9–16–08; 8:45 am]

BILLING CODE 6820–EP–S

## DEPARTMENT OF DEFENSE

## GENERAL SERVICES ADMINISTRATION

## NATIONAL AERONAUTICS AND SPACE ADMINISTRATION

## 48 CFR Parts 4, 8, 9, 18, 44, and 52

**[FAC 2005–27; FAR Case 2007–015; Item III; Docket 2008–0001; Sequence 16]**

**RIN 9000–AK96**

## Federal Acquisition Regulation; FAR Case 2007–015, Administrative Changes to the FPI Blanket Waiver and the JWOD Program Name

**AGENCIES:** Department of Defense (DoD), General Services Administration (GSA), and National Aeronautics and Space Administration (NASA).

**ACTION:** Final rule.

**SUMMARY:** The Civilian Agency Acquisition Council and the Defense Acquisition Regulations Council (Councils) have agreed on a final rule amending the Federal Acquisition Regulation (FAR) to increase the blanket waiver threshold for small dollar-value purchases from Federal Prison Industries (FPI) by Federal agencies and to change the name of the JWOD Program to the AbilityOne Program.

**DATES:** *Effective Date: October 17, 2008.*

**FOR FURTHER INFORMATION CONTACT** Mr. William Clark, Procurement Analyst, at (202) 219–1813 for clarification of content. For information pertaining to status or publication schedules, contact the FAR Secretariat at (202) 501–4755. Please cite FAC 2005–27, FAR case 2007–015.

**SUPPLEMENTARY INFORMATION:**

### A. Background

The FPI Board of Directors recently revised its 2003 resolution to increase the blanket waiver threshold for small dollar-value purchases from FPI by Federal agencies. A revision to an earlier resolution adopted by the FPI Board provides that the increased dollar threshold necessary to obtain FPI clearance would become effective upon the publication of appropriate modification to the FAR.

This final rule amends the FAR to reflect the threshold increase from $2,500 to $3,000. No waiver is required to buy from an alternative source below $3,000. Customers may, however, still purchase from FPI at, or below, this threshold, if they so choose.

The Committee for Purchase From People Who Are Blind or Severely Disabled, which administers the Javits-Wagner-O'Day Act, has changed its program name to the AbilityOne Program (formerly JWOD Program). The Committee changed the program's name to the AbilityOne Program through the **Federal Register** on November 27, 2006 (71 FR 68492). This final rule will update the name of the program for all occurrences in the FAR.

This is not a significant regulatory action and, therefore, was not subject to review under Section 6(b) of Executive Order 12866, Regulatory Planning and Review, dated September 30, 1993. This rule is not a major rule under 5 U.S.C. 804.

### B. Regulatory Flexibility Act

The Regulatory Flexibility Act does not apply to this rule. The final rule does not constitute a significant FAR revision within the meaning of FAR 1.501 and Pub. L. 99–577, and publication for public comments is not required. However, the Councils will consider comments from small entities concerning the affected FAR parts 4, 8, 9, 18, 44 and 52 in accordance with 5 U.S.C. 610. Interested parties must submit such comments separately and should cite 5 U.S.C. 601, *et seq.* (FAC 2005–27, FAR Case 2007–015), in correspondence.

### C. Paperwork Reduction Act

The Paperwork Reduction Act does not apply because the changes to the FAR do not impose information collection requirements that require the approval of the Office of Management and Budget under 44 U.S.C. 3501, *et seq.*

### List of Subjects in 48 CFR Parts 4, 8, 9, 18, 44, and 52

Government procurement.

Dated: September 9, 2008.

**Al Matera,**

*Director, Office of Acquisition Policy.*

■ Therefore, DoD, GSA, and NASA amend 48 CFR parts 4, 8, 9, 18, 44, and 52 as set forth below:

■ 1. The authority citation for 48 CFR parts 4, 8, 9, 18, 44, and 52 continues to read as follows:

**Authority:** 40 U.S.C. 121(c); 10 U.S.C. chapter 137; and 42 U.S.C. 2473(c).

## PART 4—ADMINISTRATIVE MATTERS

**4.602 [Amended]**

■ 2. Amend section 4.602 paragraph (a)(2) by removing ''and nonprofit agencies'' and adding ''and AbilityOne nonprofit agencies'' in its place.

**4.606 [Amended]**

■ 3. Amend section 4.606 paragraph (c)(3) by removing ''JWOD'' and adding ''AbilityOne'' in its place.

## PART 8—REQUIRED SOURCES OF SUPPLIES AND SERVICES

■ 4. Amend section 8.602 by revising the introductory text of paragraph (c) and paragraph (c)(1) to read as follows.

**8.602 Policy.**

* * * * *

(c) In some cases where FPI and an AbilityOne participating nonprofit agency produce identical items (see 8.603), FPI grants a waiver to permit the Government to purchase a portion of its requirement from the AbilityOne participating nonprofit agency. When this occurs, the portion of the requirement for which FPI has granted a waiver—

(1) Shall be purchased from the AbilityOne participating nonprofit agency using the procedures in Subpart 8.7; and

* * * * *

■ 5. Amend section 8.603 by revising the introductory paragraph; and removing from paragraphs (a)(2) and (b)(1) ''JWOD'' and adding ''AbilityOne'' in its place.

**8.603 Purchase priorities.**

FPI and nonprofit agencies participating in the AbilityOne Program under the Javits-Wagner-O'Day Act (see Subpart 8.7) may produce identical supplies or services. When this occurs, ordering offices shall purchase supplies and services in the following priorities:

* * * * *

**8.605 [Amended]**

■ 6. Amend section 8.605 by removing from paragraph (e) ''$2,500'' and adding ''$3,000'' in its place.

■ 7. Revise section 8.700 to read as follows:

**8.700 Scope of subpart.**

This subpart prescribes the policies and procedures for implementing the Javits-Wagner-O'Day Act (41 U.S.C. 46–

48c) and the rules of the Committee for Purchase from People Who Are Blind or Severely Disabled (41 CFR Chapter 51) which implements the AbilityOne Program.

**8.701 [Amended]**

■ 8. Amend section 8.701 by removing ''JWOD'' wherever it occurs and adding ''AbilityOne'' in its place.

**8.702 [Amended]**

■ 9. Amend section 8.702 by removing from paragraph (a) ''JWOD'' and adding ''AbilityOne'' in its place; and removing from paragraph (c) ''the JWOD'' and adding ''the Javits-Wagner-O'Day'' in its place.

**8.703 [Amended]**

■ 10. Amend section 8.703 by removing ''JWOD'' and adding ''AbilityOne'' in its place; removing ''*http://www.jwod.gov/procurementlist*'' and adding ''*http://www.abilityone.gov/jwod/PL.html*'' in its place; and removing ''*info@jwod.gov*'' and adding ''*info@abilityone.gov*'' in its place.

**8.704 [Amended]**

■ 11. Amend section 8.704 by removing from the introductory text of paragraph (a) ''The JWOD'' and adding ''The Javits-Wagner-O'Day'' in its place, and removing ''from JWOD'' and adding ''from AbilityOne'' in its place; and removing from paragraphs (a)(1)(ii), (a)(2)(i), and (c) ''JWOD'' and adding ''AbilityOne'' in its place.

**8.705–1 [Amended]**

■ 12. Amend section 8.705–1 by removing ''JWOD'' wherever it occurs and adding ''AbilityOne'' in its place.

**8.705–2 [Amended]**

■ 13. Amend section 8.705–2 by removing ''a JWOD'' and adding ''an AbilityOne'' in its place.

**8.705–3 [Amended]**

■ 14. Amend section 8.705–3 by removing from paragraphs (a) and (c) ''JWOD'' and adding ''AbilityOne'' in its place.

**8.705–4 [Amended]**

■ 15. Amend section 8.705–4 by removing from paragraphs (a) and (b) ''JWOD'' and adding ''AbilityOne'' in its place; and removing from paragraph (c) ''a JWOD'' and adding ''an AbilityOne'' in its place.

**8.706, 8.707, 8.708, 8.710, 8.711, and 8.712 [Amended]**

■ 16. Amend sections 8.706, 8.707, 8.708, 8.710, 8.711, and 8.712 by removing ''JWOD'' wherever it occurs and adding ''AbilityOne'' in its place.

**8.713 [Amended]**

■ 17. Amend section 8.713 by removing from paragraph (a) ''a JWOD'' and adding ''an AbilityOne'' in its place; and removing from paragraph (b) ''JWOD'' and adding ''AbilityOne'' in its place.

**8.715 [Amended]**

■ 18. Amend section 8.715 by removing ''JWOD'' wherever it occurs and adding ''AbilityOne'' in its place.

**8.716 [Amended]**

■ 19. Amend section 8.716 by removing from the introductory paragraph ''a JWOD'' and adding ''an AbilityOne'' in its place.

## PART 9—CONTRACTOR QUALIFICATIONS

■ 20. Amend section 9.107 by revising the section heading and paragraph (a); and removing from paragraphs (b) and (d) ''JWOD'' and adding ''AbilityOne'' in its place. The revised text reads as follows:

**9.107 Surveys of nonprofit agencies participating in the AbilityOne Program under the Javits-Wagner-O'Day Act.**

(a) The Committee for Purchase From People Who Are Blind or Severely Disabled (Committee), as authorized by 41 U.S.C. 46–48c, determines what supplies and services Federal agencies are required to purchase from AbilityOne participating nonprofit agencies serving people who are blind or have other severe disabilities (see Subpart 8.7). The Committee is required to find an AbilityOne participating nonprofit agency capable of furnishing the supplies or services before the nonprofit agency can be designated as a mandatory source under the AbilityOne Program. The Committee may request a contracting office to assist in assessing the capabilities of a nonprofit agency.

* * * * *

## PART 18—EMERGENCY ACQUISITIONS

■ 21. Revise section 18.107 to read as follows:

**18.107 AbilityOne specification changes.**

Contracting officers are not held to the notification required when changes in AbilityOne specifications or descriptions are required to meet emergency needs. (See 8.712(d).)

## PART 44—SUBCONTRACTING POLICIES AND PROCEDURES

**44.202–2 [Amended]**

■ 22. Amend section 44.202–2 by removing from paragraph (a)(4)(ii) ''(JWOD)''.

## PART 52—SOLICITATION PROVISIONS AND CONTRACT CLAUSES

■ 23. Amend section 52.208–9 by—
■ a. Revising the date of the clause;
■ b. Removing from paragraph (a) ''(JWOD)'';
■ c. Removing from paragraph (b) ''a JWOD'' and adding ''an AbilityOne'' in its place; and
■ d. Removing from paragraph (c) ''JWOD'' and adding ''AbilityOne'' in its place.
■ The revised text reads as follows:

**52.208–9 Contractor Use of Mandatory Sources of Supply or Services.**

* * * * *

CONTRACTOR USE OF MANDATORY SOURCES OF SUPPLY OR SERVICES (OCT 2008)

* * * * *

[FR Doc. E8–21386 Filed 9–16–08; 8:45 am]

BILLING CODE 6820–EP–S

---

## DEPARTMENT OF DEFENSE

## GENERAL SERVICES ADMINISTRATION

## NATIONAL AERONAUTICS AND SPACE ADMINISTRATION

## 48 CFR Parts 5, 6, 12, 18, 26, and 52

**[FAC 2005–27; FAR Case 2006–014; Item IV; Docket 2007–0001; Sequence 7]**

**RIN 9000–AK54**

## Federal Acquisition Regulation; FAR Case 2006–014, Local Community Recovery Act of 2006

**AGENCIES:** Department of Defense (DoD), General Services Administration (GSA), and National Aeronautics and Space Administration (NASA).

**ACTION:** Final rule.

**SUMMARY:** The Civilian Agency Acquisition Council and the Defense Acquisition Regulations Council (Councils) have adopted as final, with a minor change to the second interim rule, two interim rules amending the Federal Acquisition Regulation (FAR) to implement amendments to the Robert T. Stafford Disaster Relief and Emergency Assistance Act. The first interim rule was published in the **Federal Register** at 71 FR 44546, August 4, 2006. The second interim rule was published in the **Federal Register** at 72 FR 63084, November 7, 2007.

**DATES:** *Effective Date*: October 17, 2008.

**FOR FURTHER INFORMATION CONTACT:** For clarification of content, contact Mr. William Clark, Procurement Analyst, at (202) 219–1813. For information

pertaining to status or publication schedules, contact the Regulatory Secretariat at (202) 501–4755. Please cite FAC 2005–27, FAR case 2006–014.

**SUPPLEMENTARY INFORMATION:**

### A. Background

This final rule amends the Federal Acquisition Regulation implementing amendments to the Robert T. Stafford Disaster Relief and Emergency Assistance Act at 42 U.S.C. 5150.

The Local Community Recovery Act of 2006 amended the Robert T. Stafford Disaster Relief and Emergency Assistance Act to authorize set-asides for major disaster or emergency assistance acquisitions to businesses that reside or primarily do business in the geographic area affected by the disaster or emergency. DoD, GSA, and NASA published an interim rule in the **Federal Register** at 71 FR 44546, August 4, 2006, to implement this statutory amendment.

Subsequently, Section 694 of the Department of Homeland Security Appropriations Act of 2007, Pub. L. 109–295, amended the Robert T. Stafford Disaster Relief and Emergency Assistance Act to enact requirements for transitioning work under existing contracts. A second interim rule was published in the **Federal Register** at 72 FR 63084, November 7, 2007, to address this statutory amendment. The second interim rule addressed the public comments received on the first interim rule. There were no comments received on the second interim rule.

This is not a significant regulatory action and, therefore, was not subject to review under Section 6(b) of Executive Order 12866, Regulatory Planning and Review, dated September 30, 1993. This rule is not a major rule under 5 U.S.C. 804.

### B. Regulatory Flexibility Act

The Department of Defense, the General Services Administration, and the National Aeronautics and Space Administration certify that this final rule will not have a significant economic impact on a substantial number of small entities within the meaning of the Regulatory Flexibility Act, 5 U.S.C. 601, *et seq*. The rule implements set-asides for local businesses in an area affected by a major disaster or emergency to promote economic recovery.

The set-aside does not replace the small business set-aside. Both set-asides can apply to an acquisition. The local set-aside encourages the use of local small businesses.

The rule also implements a new requirement that work performed under contracts already in effect be transitioned to local area organizations, firms or individuals, unless the agency head determines it is not feasible or practicable. The Councils expect that more work will be transitioned to small businesses than away from them. The Government Accountability Office (GAO) report on Hurricane Katrina Small Business Contracts (GAO–07–205) found that businesses in the three states primarily affected by the hurricane received $1.9 billion, which was 18 percent of the $11.6 billion spent by DHS, GSA, DoD and the Army Corps of Engineers between August 1, 2005 and June 30, 2006. Small businesses received 66 percent of the $1.9 billion awarded to those local businesses. The Councils believe this shows that small businesses would not be hurt by a local area set-aside.

### C. Paperwork Reduction Act

The Paperwork Reduction Act does not apply because the changes to the FAR do not impose information collection requirements that require the approval of the Office of Management and Budget under 44 U.S.C. 3501, *et seq.*

### List of Subjects in 48 CFR Parts 5, 6, 12, 18, 26, and 52

Government procurement.

Dated: September 9, 2008.

**Al Matera,**

*Director, Office of Acquisition Policy.*

■ Accordingly, under the authority of 40 U.S.C. 121, the interim rule published at 71 FR 44546, August 4, 2006, is adopted as a final rule, and the interim rule published at 72 FR 63084, November 7, 2007, is adopted as a final rule with the following change:

## PART 26—OTHER SOCIOECONOMIC PROGRAMS

■ 1. The authority citation for 48 CFR part 26 continues to read as follows:

**Authority:** 40 U.S.C. 121(c); 10 U.S.C. chapter 137; and 42 U.S.C. 2473(c).

■ 2. Revise section 26.202–2 to read as follows.

#### 26.202–2 Evaluation preference.

The contracting officer may use an evaluation preference, when authorized in agency regulations or procedures.

[FR Doc. E8–21387 Filed 9–16–08; 8:45 am]

BILLING CODE 6820–EP–S

## DEPARTMENT OF DEFENSE

## GENERAL SERVICES ADMINISTRATION

## NATIONAL AERONAUTICS AND SPACE ADMINISTRATION

## 48 CFR Part 6

**[FAC 2005–27; FAR Case 2007–007; Item V; Docket 2008–001; Sequence 17]**

**RIN 9000–AL08**

## Federal Acquisition Regulation; FAR Case 2007–007, Additional Requirements for Competition Advocate Annual Reports

**AGENCIES:** Department of Defense (DoD), General Services Administration (GSA), and National Aeronautics and Space Administration (NASA).

**ACTION:** Final rule.

**SUMMARY:** The Civilian Agency Acquisition Council and the Defense Acquisition Regulations Council (Councils) have agreed on a final rule amending the Federal Acquisition Regulation (FAR) to require that annual reviews by executive agency competition advocates be provided in writing to both the agency senior procurement executive and the agency chief acquisition officer, if designated, and that the reports specifically address the quality of planning, executing, and managing of task and delivery orders over $1 million.

**DATES:** *Effective Date:* October 17, 2008.

**FOR FURTHER INFORMATION CONTACT** Mr. Ernest Woodson, Procurement Analyst, at (202) 501–3775 for clarification of content. For information pertaining to status or publication schedules, contact the FAR Secretariat at (202) 501–4755. Please cite FAC 2005–27, FAR case 2007–007.

**SUPPLEMENTARY INFORMATION:**

### A. Background

The Administrator of the Office of Federal Procurement Policy (OFPP) issued a memorandum dated May 31, 2007, entitled ''Enhancing Competition in Federal Acquisition'', to executive agency chief acquisition officers and senior procurement executives that outlined several initiatives for enhancing competition in Federal acquisition. The agency competition advocates are required to describe initiatives that ensure task and delivery orders over $1,000,000 issued under multiple award contracts are properly planned, issued, and comply with 8.405 and 16.505 in a report to the agency senior procurement executive and the

agency chief acquisition officer. An attachment to the Administrator's May 31, 2007 memorandum entitled, Enhancing Competition in Federal Acquisition, contains a list of questions designed to assist competition advocates in assessing the quality of competitive practices at their agencies. The policy memorandum and attachment can be found at *http://www.whitehouse.gov/omb/procurement/comp_contracting/competition_memo_053107.pdf*. This FAR case implements this policy change.

This is not a significant regulatory action and, therefore, was not subject to review under Section 6(b) of Executive Order 12866, Regulatory Planning and Review, dated September 30, 1993. This rule is not a major rule under 5 U.S.C. 804.

**B. Regulatory Flexibility Act**

The Regulatory Flexibility Act does not apply to this rule. This final rule does not constitute a significant FAR revision within the meaning of FAR 1.501 and Public Law98–577, and publication for public comments is not required. However, the Councils will consider comments from small entities concerning the affected FAR Part 6 in accordance with 5 U.S.C. 610. Interested parties must submit such comments separately and should cite 5 U.S.C. 601, *et seq.* (FAC 2005–27, FAR case 2007–007), in correspondence.

**C. Paperwork Reduction Act**

The Paperwork Reduction Act does not apply because the changes to the FAR do not impose information collection requirements that require the approval of the Office of Management and Budget under 44 U.S.C. 3501, *et seq.*

**List of Subjects in 48 CFR Part 6**

Government procurement.

Dated: September 9, 2008.

**Al Matera,**

*Director, Office of Acquisition Policy.*

■ Therefore, DoD, GSA, and NASA amend 48 CFR part 6 as set forth below:

## PART 6—COMPETITION REQUIREMENTS

■ 1. The authority citation for 48 CFR part 6 continues to read as follows:

**Authority:** 40 U.S.C. 121(c); 10 U.S.C. chapter 137; and 42 U.S.C. 2473(c).

■ 2. Amend section 6.502 by—

■ a. Revising the introductory text of paragraphs (b)(1) and (b)(2);

■ b. Removing from the end of the paragraph (b)(2)(v) the word ''and'';

■ c. Adding to the end of paragraph (b)(2)(vi) the word ''and'';

■ d. Adding a new paragraph (b)(2)(vii); and

■ e. Revising paragraphs (b)(3) and (b)(4) to read as follows:

**6.502 Duties and Responsibilities.**

* * * * *

(b) * * *

(1) Review the contracting operations of the agency and identify and report to the agency senior procurement executive and the chief acquisition officer—

* * * * *

(2) Prepare and submit an annual report to the agency senior procurement executive and the chief acquisition officer in accordance with agency procedures, describing—

* * * * *

(vii) Initiatives that ensure task and delivery orders over $1,000,000 issued under multiple award contracts are properly planned, issued, and comply with 8.405 and 16.505.

(3) Recommend goals and plans for increasing competition on a fiscal year basis to the agency senior procurement executive and the chief acquisition officer; and

(4) Recommend to the agency senior procurement executive and the chief acquisition officer a system of personal and organizational accountability for competition, which may include the use of recognition and awards to motivate program managers, contracting officers, and others in authority to promote competition in acquisition.

[FR Doc. E8–21388 Filed 9–16–08; 8:45 am]

BILLING CODE 6820–EP–S

---

## DEPARTMENT OF DEFENSE

## GENERAL SERVICES ADMINISTRATION

## NATIONAL AERONAUTICS AND SPACE ADMINISTRATION

## 48 CFR Parts 12, 13, 32, 33, 36, 42, and 52

**[FAC 2005–27; FAR Case 2005–018; Item VI; Docket 2006–0020; Sequence 11]**

**RIN 9000–AK59**

## Federal Acquisition Regulation; FAR Case 2005–018, Contract Debts

**AGENCIES:** Department of Defense (DoD), General Services Administration (GSA), and National Aeronautics and Space Administration (NASA).

**ACTION:** Final rule.

**SUMMARY:** The Civilian Agency Acquisition Council and the Defense Acquisition Regulations Council (Councils) have agreed on a final rule amending the Federal Acquisition Regulation (FAR) to revise the policies and procedures for contract debts.

**DATES:** *Effective Date*: October 17, 2008

**FOR FURTHER INFORMATION CONTACT:** Ms. Meredith Murphy, Procurement Analyst, at (202) 208–6925 for clarification of content. For information pertaining to status or publication schedules, contact the FAR Secretariat at (202) 501–4755. Please cite FAC 2005–27, FAR case 2005–018.

**SUPPLEMENTARY INFORMATION:**

**A. Background**

In 2003, the DoD Comptroller established the DoD Accounts Receivable Workgroup to evaluate the processes and procedures for reporting accounts receivables. This Workgroup concluded that contracting officers may not be properly reporting contract debts. Based on the Workgroup's recommendations, DoD established a Contract Debt Integrated Process Team (IPT).

The mission of the IPT was to evaluate the adequacy of DoD's existing controls and procedures for ensuring that contract debts are identified and recovered in a timely manner, properly accounted for in DoD's books and records, and properly coordinated with the appropriate Government officials. Contract debts result from compliance, or a failure to comply, with the terms of a contract and include debts identified by auditors, contracting officers, disbursing officials, and contractors. On May 26, 2005, a final report was issued that included a number of recommended FAR changes to improve contract debt controls and procedures, and to ensure consistency within/between existing regulations.

The Councils established this case to evaluate the DoD recommendations and apply them, where appropriate, Governmentwide. The rule makes the following changes:

1. *Reorganizes FAR 32.6*. Reorganizes FAR 32.6 to add clarity and provide a logical sequence. The section has been reorganized as follows:

32.600—Scope of subpart.
32.601—General.
32.602—Responsibilities.
32.603—Debt determination.
32.604—Demand for payment.
32.605—Final decisions.
32.606—Debt collection.
32.607—Installment payments and deferment of collection.
32.608—Interest.
32.609—Delays in receipt of notices or demands.

32.610—Compromising debts.
32.611—Contract clause.

2. *Scope of Subpart*. Revises FAR 32.600 to provide a more accurate description of the scope of this FAR subpart. FAR Subpart 32.6 prescribes policies and procedures for identifying, collecting, and deferring collection of contract debts (including interest, if applicable).

3. *Responsible Official*. Replaces the term ''responsible official'' with the specific individual/organization responsible for fulfilling the FAR requirement. Some of the responsibilities currently listed are assigned to one individual/organization (*e.g.*, the Procuring Contracting Officer) and other responsibilities are assigned to another individual/organization (e.g., the payment office). To assure a clear understanding of the process and applicable duties, the rule specifies the responsible party for each required action (*e.g.*, the Procuring Contracting Officer, the Administrative Contracting Officer, the payment office, etc.) rather than referring to all parties as ''responsible officials.''

4. *Contract Debt—General*. Revises FAR 32.601 to specify what constitutes a contract debt, rather than how a contract debt may arise. In addition, this section is amended to include payments determined to be in excess of contract limitations for commercial financing, because such payments constitute a contract debt.

5. *Contract Debt Responsibilities—Identifying, Demanding Payment, Collecting, and Liquidating*. Adds a section to clearly define the responsibilities of the contracting officer and the payment officials to assure an efficient and non-duplicative process. Under the rule—

a. The contracting officer is responsible for identifying a contract debt and demanding payment of a contract debt. The contracting officer is prohibited from collecting contract debts or otherwise liquidating contract debts (*e.g.*, offsetting the amount of the debt against existing unpaid bills due the contractor or allowing contractors to retain contract debts to cover amounts that may be payable to the contractor in the future); and

b. The payment office is responsible for collecting payment of the contract debt and liquidating the contract debt.

6. *Contract Debt Determinations*. Consolidates all discussions of contract debt determinations in FAR 32.603, Debt Determinations, including the responsibility of the contracting officer in making debt determinations.

7. *Tax Credit*. Deletes the current FAR 32.607 because the referenced tax credit (Sec. 1481) was repealed on November 5, 1990, by Public Law 101–508.

8. *Demand for Payment*. Consolidates all discussions of the demand for payment in a single section, at FAR 32.604, Demand for payment, to include—

a. A requirement to issue the demand letter except in specific circumstances;

b. A requirement that the demand letter include accounting information to enable the payment office to correctly record the amounts in the proper accounts;

c. A requirement that the demand letter include the amount of interest owed under statutes that require interest assessments from the date of noncompliance to the date of repayment (CAS and TINA).

d. A paragraph implementing the requirements of 31 U.S.C. 3717(e)(1) and the Debt Collection Improvement Act of 1996; and

e. A paragraph addressing instances where overpayments exist but a demand for payment is not necessary.

9. *Final Decisions*. Consolidates all discussions of final decisions in a single section at FAR 32.605, Final Decisions, to include—

a. When a final decision must be issued;

b. A statement that the due date for a demand letter is not extended simply because a final decision is being issued; and

c. A need to obtain evidence of receipt by the contractor to establish the starting date for interest computations and the statute of limitations.

10. *Debt Collection*. Consolidates all discussions of debt collection in a single section, at FAR 32.606, Debt Collection, to include—

a. The current requirements at FAR 32.612;

b. The current requirements for transferring debts to the Department of Treasury; and

c. A requirement to assure the debt is being collected by maintaining communication between the contracting officer and the payment office.

11. *Installment Payments and Deferment of Collection*. Clarifies procedures for processing installment payments and deferment of collection requests.

12. *Interest*. Consolidates and simplifies all discussions of interest in a single section, at FAR 32.608, Interest, to include—

a. The substance of the current language at FAR 32.614; and

b. *Computing interest credits*. The discussion focuses on how to compute the interest, *i.e.*, from the time of overcollection until the time the overcollection is remitted to the contractor.

13. Revises FAR 12.215 and 32.008 to refer to the responsibilities of the contracting officer at 32.604 when notified by the contractor of an overpayment.

14. *FAR Contract Clauses—Payment*. Revises the contract clauses at FAR 52.212–4(i)(5) and (6); 52.232–25(d); 52.232–26(c); and FAR 52.232–27(l) to assure that the contractor remits payment to the payment office (rather than the contracting officer) and the payment office is able to properly account for the remittance. Also, revises Alternate I of the clause at FAR 52.212–4 to be consistent with the requirements of the basic clause.

15. *FAR 52.232–17, Interest*. Revises FAR 52.232–17 to conform with the other revisions.

16. FAR 52.212–4 and 52.232–17. Revises the subject clauses to be consistent with the policy at FAR Part 32:

a. The Government's right to make a demand for payment and start the interest clock running under the contract is ensured by adding a procedure to the Interest Clause permitting a demand for payment.

b. The Government's right to make a demand for payment without first issuing a final decision of the contracting officer is ensured by incorporating the procedure into the interest clause. A final decision is required only if the contractor disagrees with the demand for payment.

DoD, GSA, and NASA published a proposed rule in the **Federal Register** at 71 FR 62230, October 24, 2006. Comments were received from three respondents in response to the proposed rule. The Councils considered all of the comments and recommendations in developing the final rule. A discussion of the comments is provided below.

**B. Disposition of Comments:**

1. *Comment*. One commenter recommended deleting the requirement at FAR 32.607–2(a)(2) for contractors to provide contracting officers information on the advisability of debt deferment to avoid possible over-collections when the contractor is not disputing the debt. When the contractor does not dispute the debt, there can be no over-collection.

*Response*. Under the Contract Disputes Act of 1978, contractors have one year to file an appeal. While a contractor may not initially dispute the claim, a contractor can subsequently decide to file an appeal within the statutory time limits. Therefore, over-collections can occur when a contractor

does not initially dispute the claim but subsequently files a claim. However, the office designated in agency procedures is responsible for determining whether the deferment of collection should be granted to avoid possible over-collections. That determination does not require input from the contractor. Therefore, the Councils deleted the requirement as recommended. In addition, the proposed rule also required contractors to provide the same information when the contractor is disputing the debt. The Councils also deleted that requirement since the determination does not require input from the contractor.

2. *Comment*. One commenter recommended moving the requirement at FAR 32.607–2(c)(2) for contracting officers to consider any information necessary to develop a recommendation on a deferment request before the requirement for the contracting officer to forward the recommendation on the deferment request to the office designated in agency procedures since the contracting officer should consider the information before developing and sending the recommendation.

*Response*. The Councils agreed and revised the rule as recommended.

3. *Comment*. One commenter said the statement at FAR 32.607–2(d) that an agency is required to use current year unexpired funds to pay interest on over-collections is unnecessary since the information is related to a financial management matter, not a contracting matter.

Response. The rule requires contracting officers to provide a recommendation on the contractor's request for a deferment of collection, including the advisability of deferment to avoid possible over-collections. Contracting officers need to know the possible ramifications of over-collections to make an informed recommendation.

4. *Comment*. One commenter stated that ''actions filed by contractors shall not suspend or delay collection'' in the last paragraph at FAR 32.607–2(j), ''deferment of collection,'' made no sense since the subsection provides the rule for processing a deferment to suspend or defer collection. The commenter recommended rewording the requirement to say ''the filing of an action under the Disputes clause does not suspend or delay the need for collection of a debt'' and moving the requirement to the beginning of the subsection.

*Response*. The Councils agree and revised the rule as recommended.

5. *Comment*. One commenter said the statement in FAR 32.607–2(j) that ''until the action is decided'' was unnecessary and confusing since contractors do not have to file an ''action'' or appeal in order to be eligible for a deferment of collection.

*Response*. The Councils agree and deleted the statement.

6. *Comment*. One commenter recommended deleting the requirement at FAR 32.607–2(j) for contractors to present ''a good and sufficient bond or other acceptable collateral in the amount of the claim'' for a deferment of collection because the requirement conflicts with the requirements that allow deferment of collections when a claim is not filed. The contractor's financial condition and promise to pay are considered ''other acceptable collateral.'' Also, the requirement for the contractor to present the collateral to the contracting officer within 30 days of filing a dispute makes no sense because there is no time limit requirement for filing a dispute.

*Response*. A contractor's financial condition and promise to pay are not ''other acceptable collateral.'' Collateral is property pledged by a contractor to protect the interests of the Government. However, the office designated in agency procedure, not the contracting officer, is responsible for determining whether a bond or other acceptable collateral is needed. Therefore, the Councils deleted the statement as recommended.

7. *Comment*. One commenter said the statement at FAR 32.607–2(j) that ''any amount collected by the Government in excess of the amount found to be due on appeal shall be refunded to the contractor with interest'' was misplaced since there can be no excess collection if payment is deferred. Also, this requirement would apply to cases where there is no deferment of collection but including it only in the subpart on deferment of collection means it would only apply to cases with deferments of collection. The requirement should be addressed in subsection FAR 32.608–2 on ''interest credits.'' Further, the requirement says interest will be refunded to the contractor for any amounts collected by the Government in excess of the amount found due on appeal from ''the date of collection'' conflicts with the requirements in the subsection on ''interest credits'' that says the interest will be computed from the ''date specified in the first demand for payment.'' If the requirement is addressed in the subsection on ''interest credits,'' the last sentence of subpart FAR 32.607–2(j) that includes additional requirements for calculating interest on excess amounts collected by the Government becomes unnecessary and should be deleted.

*Response*. The requirements of the subpart apply to all contractor requests for deferment of collections, not just to deferments granted by the Government. Therefore, there can be over-collections when the Government does not grant the deferment of collections. In addition, the requirements apply to all Government over-collections, not just those involving deferment of collections. Therefore, the coverage was relocated to the subsection on interest credits, and the last sentence of subpart 32.607–2(j) was deleted as recommended. Also, the methodology for calculating interest in the subpart did conflict with the methodology in the subpart on ''interest credits.'' Therefore, the rule was revised to make the requirements consistent. Interest on Government over-collections begins on the date of over-collection, not the date of the first demand for payment.

8. *Comment*. One commenter recommending deleting the methodology for computing interest charges from 32.608–1(a)(2) because it duplicates coverage in the clause at FAR 52.232–7, Interest.

*Response*. The Councils agree the language is redundant and deleted the text as recommended.

9. *Comment*. One commenter recommended adding the requirement for making interest on contract debts part of the required elements for deferment agreements at 32.608–2(g) and deleting the requirement at 32.608–1(b) because it duplicates coverage at 32.607(c) on installment payments and deferment of collection.

*Response*. The Councils agree and revised the rule as recommended.

10. *Comment*. One commenter recommended revising the coverage at 32.608–2(b)(1) on interest credits to say interest ''to be credited'' instead of interest ''to be charged'' since the subsection deals with ''interest credits.''

*Response*. The Councils disagree and leave the rule as is.

11. *Comment*. One commenter said including information such as lines of accounting in the demand for payment is excessive and not particularly relevant to the contractor. Instead, require the contracting officer to provide the distribution of the debt by line of accounting and ''additional information'' to allow the payment or finance office to identify the affected lines of accounting, appropriations, and contracts, when the demand for payment is forwarded to the payment office. Finance offices have procedures for debt collection or other recovery of monies owed that are in accordance

with Department of Treasury regulations and policy. Most payment offices also know how to apply payments. Some of these procedures may overlap other policy or regulations such as those issued by the Department of Treasury.

*Response*. The lines of accounting are required for agency finance or payment offices to properly record the debt. If the lines of accounting are not readily available, the rule authorizes issuing the demand for payment without the lines of accounting. The Councils see no reason to require contracting officers to separately report the lines of accounting if the information is readily available when the demand for payment is made. In addition, the Councils are unaware of any conflict with Treasury or other agency's policy or regulations.

12. *Comment*. One commenter recommended combining the requirements of FAR 32.604(b)(4)(iii) and (i).

*Response*. The Councils believe the commenter is recommending combining the requirements at FAR 32.604(b)(4)(iii) and FAR 32.604(b)(4)(i). Both references discuss the methodology for calculating interest on contract debts that result from specific contract terms. The Councils agree and have revised the rule as recommended.

13. *Comment*. One commenter said the rule should also allow contractors to remit checks ''payable to the agency,'' instead of requiring that the checks be ''payable to the Treasurer of the United States'' because payments due an agency are made payable to the agency.

*Response*. Section 2015 of the Treasury Financial Manual (TFM) says checks should be made payable to the organization maintaining the account to be credited, not to the Department of Treasury. Therefore, the Councils revised the rule to be consistent with the TFM.

14. *Comment*. One commenter asked whether the required notification at 32.604(b)(6) that the payment office may offset the debt against any payments otherwise due the contractor means any payment owed to the contractor by any Federal agency under any contract or only payments under the cognizant contract or other contracts awarded by the agency issuing the demand for payment.

*Response*. For the first 180 days after the demand for payment, the agency issuing the demand for payment will attempt to offset the debt against any payments otherwise due from the agency to the contractor. If an agency is unable to recover the debt within 180 days, agencies are required to transfer the debt to the Department of Treasury in accordance with the Debt Collection Improvement Act of 1996. The Department of Treasury will then offset the debt against any payment made by a Federal agency under any contract and other Federal payments to the delinquent debt holder under the cognizant contract or other contracts awarded by the agency issuing the demand letter.

15. *Comment*. One commenter recommended including a statement in the required notice at FAR 32.604(b)(8) that requests for installment payments or deferment of collection must be written, provided to the contracting officer, and include ''any information required.''

*Response*. The commenter did not provide rationale for the change; however, the rule already requires that requests for installment payments or deferment of collection be written (see 32.607–1 and 32.607–2(a)). The rule also identifies to whom the contractor should submits its request, *i.e.*, payment office for installment payments and contracting officer for deferment of collections. Finally, nothing in the rule precludes agencies from requiring contractors to provide additional information to make a decision on a request for installment payments or deferment.

16. *Comment*. One commenter asked if there was a point in time that the contracting officer is expected to do more than follow up with the payment office to determine whether the debt has been collected and credited to the correct appropriations.

*Response*. The payment office is responsible for collecting debts identified by the contracting officer. As discussed above, agencies are required to transfer any debt that is delinquent more than 180 days to the Department of Treasury for collection. The Department of Treasury then offsets the debt against any payment made by a Federal agency under any contract and other Federal payments to the delinquent debt holder. As stated in the rule, contracting officers are not authorized to collect contract debts or otherwise agree to liquidate contract debts.

17. *Comment*. One commenter said the requirement at 32.607(a) that the contracting officer cannot approve or deny a contractor's request for installment payments or deferment of collections appears to contradict the requirement at FAR 32.605(a)(3) for the contracting officer to issue a final decision if the contractor requests a deferment of collection on a debt previously demanded by the contracting officer.

*Response*. Approving or denying a contractor's request for installment payments or deferment of collections is not the same as issuing a final decision. The contracting officer is required to issue a demand for payment as soon as the contracting officer has determined the existence and amount of a debt. In most cases, contractors willingly repay the debt after receiving the demand for payment. If a contractor instead requests a deferment of collection or otherwise does not repay the debt in accordance with the demand for payment, the Government is required to initiate a claim against the contractor to ensure the debt is repaid. Government claims require a contracting officer's final decision under the Contract Disputes Act.

18. *Comment*. One commenter said the proposed coverage at 32.607(b)(1) on the circumstances that might justify debt deferment or installment payments when the contractor has not appealed the debt or filed an action under the disputes clause appears to be information necessary for agency financing offices, not contracting officers, since the office designed to approve or deny these actions is probably the payment or finance office. The commenter questioned the purpose of and need for its inclusion in the FAR.

*Response*. Contracting officers are required to provide the office designated in agency procedures for a decision on a deferment request a recommendation on the requests. Therefore, contracting officers need to understand the circumstances that might justify a deferment of collection. In addition, if the contractor's operations under national defense contracts will be seriously impaired by immediate repayment, the contracting officer should provide the payment or finance office information that will be considered for an installment payment agreement or debt deferment. The Councils note the subject requirements are not changed by this rule.

19. *Comment*. One commenter questioned the need for the deferment/installment agreement requirements at 32.607(b)(2) in the FAR since contracting officers are not authorized to approve or deny requests for deferments or installment payments.

*Response*. The Councils note the subject requirements are not changed by this rule. The Councils believe it is appropriate to include the language so contracting officers and contractors understand what will be required if an agreement is reached. While the contracting officers do not approve or deny these requests, contracting officers

routinely provide contractors assistance when preparing the requests.

20. *Comment*. One commenter questioned how the requirement for the contracting officer to forward to the office designated in agency procedures for a decision (a) a copy of the contractor's request for a deferment of collection, (b) a recommendation on that request, (c) a statement as to whether the contractor has an appeal pending or action filed under the disputes clause, and (d) a copy of the contracting officer's final decision (see 32.607–2(c)(1)) is different from the contracting officer's final decision.

*Response*. The contracting officer's final decision is one of the four items the contracting officer is required to forward to the office designated in agency procedure for a decision on the deferment request. The other required items provide additional information used by the office designated in agency procedure for a decision on the deferment request. Finally, a contracting officer has sole authority to determine the existence and amount of contract debts and to issue the final decision. That contracting officer's final decision is not subject to any other office's decision.

21. *Comment*. One commenter said the coverage at 32.607–2(f) that states contracts and arrangements for deferment shall not provide that a claim of the Government will not become due and payable pending mutual agreement on the amount of the claim or, in the case of dispute, until a decision is reached is confusing and unclear as to its meaning.

*Response*. The Councils note that the coverage is not changed by this rule. However, the Councils believe stating 'contracts and arrangements for deferments' could be confusing since deferment agreements are binding contracts between the contractor and the Government. Therefore, the Councils deleted the reference to ''contracts'' and changed ''arrangements for deferment'' to ''deferment agreements'' to clarify the requirement. The remaining coverage says that the Government retains the right to collect the debt at any time. The Councils are unaware of any problems with this coverage.

22. *Comment*. One commenter asked if the deferment agreement is a contract or whether the agreement should be incorporated into the contract to ensure the agreement is legally binding.

*Response*. There is no need to incorporate the agreements into the affected contracts because the agreements themselves are legally binding contracts between the contractor and the Government.

23. *Comment*. One commenter recommended revising the coverage on ''compromise'' at 32.610 because the contracting officer has the authority to settle any Government claim under the Contract Disputes Act at any time except for claims pending litigation, which are the responsibility of the Attorney General. While the term ''compromise'' is not defined in the Federal Claims Collection Act or the implementing regulations at 31 CFR 900.2, Black's Law Dictionary defines ''compromise'' as settlement. The commenter recommended revising the coverage to allow contracting officers to ''compromise'' debt claims that fall under the Contract Disputes Act to be consistent with FAR 33.204 and 33.210.

*Response*. Contracting officers have the authority to resolve all contractual issues in controversy. Contracting officers do not have the authority to compromise any resulting debt after the controversial issues have been resolved.

24. *Comment*. One commenter recommended requiring contracting officers to attempt to resolve any disputes over the existence of a debt or the amount through negotiations as part of the initial debt determination at FAR 32.605(a) to be consistent with the requirements at FAR 33.204.

*Response*. The rule is consistent with FAR 33.204, which requires contracting officers to use reasonable efforts to resolve controversies prior to the submission of a claim. Making a debt determination does not constitute submission of a claim. A Government claim is submitted when the contracting officer issues a final decision on the claim. Nothing in the rule prevents the Government from attempting to resolve controversies prior to the contracting officer's final decision.

25. *Comment*. One commenter said the coverage on final decisions at FAR 32.605 duplicates the coverage on contracting officer's decisions at FAR 33.211. The commenter also said all coverage on final decisions should be addressed in one FAR section and that section should be FAR Subpart 33.2, Disputes and Appeals.

*Response*. FAR 32.6 prescribes the policies and procedures for identifying, collecting, and deferring contract debts. Part 33 prescribes policies and procedures for processing contract disputes and appeals. Contracting officer's final decisions are key to both processes. Therefore, the Councils believe it is appropriate to include coverage in both subparts.

This is not a significant regulatory action and, therefore, was not subject to review under Section 6(b) of Executive Order 12866, Regulatory Planning and Review, dated September 30, 1993. This rule is not a major rule under 5 U.S.C. 804.

**C. Regulatory Flexibility Act**

The Department of Defense, the General Services Administration, and the National Aeronautics and Space Administration certify that this final rule will not have a significant economic impact on a substantial number of small entities within the meaning of the Regulatory Flexibility Act, 5 U.S.C. 601, *et seq.*, because the regulatory changes are predominantly internal operating procedures for contracting officers and will not significantly change duties of small entities under their contract.

**D. Paperwork Reduction Act**

The Paperwork Reduction Act does not apply because the changes to the FAR do not impose information collection requirements that require the approval of the Office of Management and Budget under 44 U.S.C. 3501, *et seq*.

**List of Subjects in 48 CFR Parts 12, 13, 32, 33, 36, 42, and 52**

Government procurement.

Dated: September 9, 2008.

**Al Matera,**

*Director, Office of Acquisition Policy.*

■ Therefore, DoD, GSA, and NASA amend 48 CFR parts 12, 13, 32, 33, 36, 42, and 52 as set forth below:

■ 1. The authority citation for 48 CFR parts 12, 13, 32, 33, 36, 42, and 52 continues to read as follows:

**Authority:** 40 U.S.C. 121(c); 10 U.S.C. chapter 137; and 42 U.S.C. 2473(c).

## PART 12—ACQUISITION OF COMMERCIAL ITEMS

■ 2. Revise section 12.215 to read as follows:

**12.215 Notification of overpayment.**

If the contractor notifies the contracting officer of a duplicate payment or that the Government has otherwise overpaid, the contracting officer shall follow the procedures at 32.604.

## PART 13—SIMPLIFIED ACQUISITION PROCEDURES

■ 3. Amend section 13.401 by revising paragraph (b) to read as follows:

**13.401 General.**

* * * * *

(b) The contracting officer shall be primarily responsible for determining the amount of debts resulting from failure of contractors to properly

replace, repair, or correct supplies lost, damaged, or not conforming to purchase requirements (see 32.602 and 32.603).

## PART 32—CONTRACT FINANCING

■ 4. Revise section 32.008 to read as follows:

### 32.008 Notification of overpayment.

If the contractor notifies the contracting officer of a duplicate payment or that the Government has otherwise overpaid, the contracting officer shall follow the procedures at 32.604.

■ 5. Revise Subpart 32.6 to read as follows:

*Sec.*

32.600 Scope of subpart.
32.601 General.
32.602 Responsibilities.
32.603 Debt determination.
32.604 Demand for payment.
32.605 Final decisions.
32.606 Debt collection.
32.607 Installment payments and deferment of collection.
32.607–1 Installment payments.
32.607–2 Deferment of collection.
32.608 Interest.
32.608–1 Interest charges.
32.608–2 Interest credits.
32.609 Delays in receipt of notices or demands.
32.610 Compromising debts.
32.611 Contract clause.

## Subpart 32.6—Contract Debts

### 32.600 Scope of subpart.

This subpart prescribes policies and procedures for identifying, collecting, and deferring collection of contract debts (including interest, if applicable). Sections 32.607, 32.608, and 32.610 of this subpart do not apply to claims against common carriers for transportation overcharges and freight and cargo losses (31 U.S.C. 3726).

### 32.601 General.

(a) Contract debts are amounts that—

(1) Have been paid to a contractor to which the contractor is not currently entitled under the terms and conditions of the contract; or

(2) Are otherwise due from the contractor under the terms and conditions of the contract.

(b) Contract debts include, but are not limited to, the following:

(1) Billing and price reductions resulting from contract terms for price redetermination or for determination of prices under incentive type contracts.

(2) Price or cost reductions for defective cost or pricing data.

(3) Financing payments determined to be in excess of the contract limitations at 52.232–16(a)(7), Progress Payments, or 52.232–32(d)(2), Performance—Based Payments, or any contract clause for commercial item financing.

(4) Increases to financing payment liquidation rates.

(5) Overpayments disclosed by quarterly statements required under price redetermination or incentive contracts.

(6) Price adjustments resulting from Cost Accounting Standards (CAS) noncompliances or changes in cost accounting practice.

(7) Reinspection costs for nonconforming supplies or services.

(8) Duplicate or erroneous payments.

(9) Damages or excess costs related to defaults in performance.

(10) Breach of contract obligations concerning progress payments, performance-based payments, advance payments, commercial item financing, or Government-furnished property.

(11) Government expense of correcting defects.

(12) Overpayments related to errors in quantity or billing or deficiencies in quality.

(13) Delinquency in contractor payments due under agreements or arrangements for deferral or postponement of collections.

(14) Reimbursement of amounts due under 33.102(b)(3) and 33.104(h)(8).

### 32.602 Responsibilities.

(a) The contracting officer has primary responsibility for identifying and demanding payment of contract debts except those resulting from errors made by the payment office. The contracting officer shall not collect contract debts or otherwise agree to liquidate contract debts (*e.g.*, offset the amount of the debt against existing unpaid bills due the contractor, or allow contractors to retain contract debts to cover amounts that may become payable in future periods).

(b) The payment office has primary responsibility for—

(1) Collecting contract debts identified by contracting officers;

(2) Identifying and collecting duplicate and erroneous payments; and

(3) Authorizing the liquidation of contract debts in accordance with agency procedures.

### 32.603 Debt determination.

(a) If the contracting officer has any indication that a contractor owes money to the Government under a contract, the contracting officer shall determine promptly whether an actual debt is due and the amount. Any unnecessary delay may contribute to—

(1) Loss of timely availability of the funds to the program for which the funds were initially provided;

(2) Increased difficulty in collecting the debt; or

(3) Actual monetary loss to the Government.

(b) The amount of indebtedness determined by the contracting officer shall be an amount that—

(1) Is based on the merits of the case; and

(2) Is consistent with the contract terms.

### 32.604 Demand for payment.

(a) Except as provided in paragraph (c) of this section, the contracting officer shall take the following actions:

(1) Issue the demand for payment as soon as the contracting officer has determined that an actual debt is due the Government and the amount.

(2) Issue the demand for payment even if—

(i) The debt is or will be the subject of a bilateral modification;

(ii) The contractor is otherwise obligated to pay the money under the existing contract terms; or

(iii) The contractor has agreed to repay the debt.

(3) Issue the demand for payment as a part of the final decision, if a final decision is required by 32.605(a).

(b) The demand for payment shall include the following:

(1) A description of the debt, including the debt amount.

(2) A distribution of the principal amount of the debt by line(s) of accounting subject to the following:

(i) If the debt affects multiple lines of accounting, the contracting officer shall, to the maximum extent practicable, identify all affected lines of accounting. If it is not practicable to identify all affected lines of accounting, the contracting officer may select representative lines of accounting in accordance with paragraph (b)(2)(ii) of this section.

(ii) In selecting representative lines of accounting, the contracting officer shall—

(A) Consider the affected departments or agencies, years of appropriations, and the predominant types of appropriations; and

(B) Not distribute to any line of accounting an amount of the principal in excess of the total obligation for the line of accounting; and

(iii) Include the lines of accounting even if the associated funds are expired or cancelled. While cancelled funds will be deposited in a miscellaneous receipt account of the Treasury if collected, the funds are tracked under the closed year appropriation(s) to comply with the Anti-Deficiency Act.

(iv) If the debt affects multiple contracts and the lines of accounting are not readily available, the contracting officer shall—

(A) Issue the demand for payment without the distribution of the principal amount to the affected lines of accounting;

(B) Include a statement in the demand for payment advising when the distribution will be provided; and

(C) Provide the distribution by the date identified in the demand for payment.

(3) The basis for and amount of any accrued interest or penalty.

(4)(i) For debts resulting from specific contract terms (*e.g.*, debts resulting from incentive clause provisions, Quarterly Limitation on Payments Statement, Cost Accounting Standards, price reduction for defective pricing), a notification stating that payment should be made promptly, and that interest is due in accordance with the terms of the contract. Interest shall be computed from the date specified in the applicable contract clause until repayment by the contractor. The interest rate shall be the rate specified in the applicable contract clause. In the case of a debt arising from a price reduction for defective pricing, or as specifically set forth in a Cost Accounting Standards (CAS) clause in the contract, interest is computed from the date of overpayment by the Government until repayment by the contractor at the underpayment rate established by the Secretary of the Treasury, for the periods affected, under 26 U.S.C. 6621(a)(2).

(ii) For all other contract debts, a notification stating that any amounts not paid within 30 days from the date of the demand for payment will bear interest. Interest shall be computed from the date of the demand for payment until repayment by the contractor. The interest rate shall be the interest rate established by the Secretary of the Treasury, as provided in Section 611 of the Contract Disputes Act of 1978 (Public Law 95–563), which is applicable to the period in which the amount becomes due, and then at the rate applicable for each six-month period as established by the Secretary until the amount is paid.

(5) A statement advising the contractor—

(i) To contact the contracting officer if the contractor believes the debt is invalid or the amount is incorrect; and

(ii) If the contractor agrees, to remit a check payable to the agency's payment office annotated with the contract number along with a copy of the demand for payment to the payment office identified in the contract or as otherwise specified in the demand letter in accordance with agency procedures.

(6) Notification that the payment office may initiate procedures, in accordance with the applicable statutory and regulatory requirements, to offset the debt against any payments otherwise due the contractor.

(7) Notification that the debt may be subject to administrative charges in accordance with the requirements of 31 U.S.C. 3717(e) and the Debt Collection Improvement Act of 1996.

(8) Notification that the contractor may submit a request for installment payments or deferment of collection if immediate payment is not practicable or if the amount is disputed.

(c) Except as provided in paragraph (d) of this section, the contracting officer should not issue a demand for payment if the contracting officer only becomes aware of the debt when the contractor—

(1) Provides a lump sum payment or submits a credit invoice. (A credit invoice is a contractor's request to liquidate the debt against existing unpaid bills due the contractor); or

(2) Notifies the contracting officer that the payment office overpaid on an invoice payment. When the contractor provides the notification, the contracting officer shall notify the payment office of the overpayment.

(d) If a demand for payment was not issued as provided for in paragraph (c) of this section, the contracting officer shall issue a demand for payment no sooner than 30 days after the contracting officer becomes aware of the debt unless—

(1) The contractor has liquidated the debt;

(2) The contractor has requested an installment payment agreement; or

(3) The payment office has issued a demand for payment.

(e) The contracting officer shall—

(1) Furnish a copy of the demand for payment to the contractor by certified mail, return receipt requested, or by any other method that provides evidence of receipt; and

(2) Forward a copy of the demand to the payment office.

**32.605 Final decisions.**

(a) The contracting officer shall issue a final decision as required by 33.211 if—

(1) The contracting officer and the contractor are unable to reach agreement on the existence or amount of a debt in a timely manner;

(2) The contractor fails to liquidate a debt previously demanded by the contracting officer within the timeline specified in the demand for payment unless the amounts were not repaid because the contractor has requested an installment payment agreement; or

(3) The contractor requests a deferment of collection on a debt previously demanded by the contracting officer (see 32.607–2).

(b) If a demand for payment was previously issued for the debt, the demand for payment included in the final decision shall identify the same due date as the original demand for payment.

(c) The contracting officer shall—

(1) Furnish the decision to the contractor by certified mail, return receipt requested, or by any other method that provides evidence of receipt; and

(2) Forward a copy to the payment office identified in the contract.

**32.606 Debt collection.**

(a) If the contractor has not liquidated the debt within 30 days of the date due or requested installment payments or deferment of collection, the payment office shall initiate withholding of principal, interest, penalties, and administrative charges. In the event the contract is assigned under the Assignment of Claims Act of 1940 (31 U.S.C. 3727 and 41 U.S.C. 15), the rights of the assignee will be scrupulously respected and withholding of payments shall be consistent with those rights. For additional information on assignment of claims, see Subpart 32.8.

(b) As provided for in the Debt Collection Improvement Act of 1996 (31 U.S.C. 3711(g)(1)), payment offices are required to transfer any debt that is delinquent more than 180 days to the Department of Treasury for collection.

(c) The contracting officer shall periodically follow up with the payment office to determine whether the debt has been collected and credited to the correct appropriation(s).

**32.607 Installment payments and deferment of collection.**

(a) The contracting officer shall not approve or deny a contractor's request for installment payments or deferment of collections. The office designated in agency procedures is responsible for approving or denying requests for installment payments or deferment of collections.

(b) If a contractor has not appealed the debt or filed an action under the Disputes clause of the contract and the contractor has submitted a proposal for debt deferment or installment payments—

(1) The office designated in agency procedures may arrange for deferment/installment payments if the contractor is unable to pay at once in full or the contractor's operations under national defense contracts would be seriously impaired. The arrangement shall include appropriate covenants and

securities and should be limited to the shortest practicable maturity; and

(2) The deferment/installment agreement shall include a specific schedule or plan for payment. It should permit the Government to make periodic financial reviews of the contractor and to require payments earlier than required by the agreement if the Government considers the contractor's ability to pay improved. It should also provide for required stated or measurable payments on the occurrence of specific events or contingencies that improve the contractor's ability to pay.

(c) If not already applicable under the contract terms, interest on contract debt shall be made an element of any agreement entered into for installment payments or deferment of collection.

**32.607–1 Installment payments.**

If a contractor requests an installment payment agreement, the contracting officer shall notify the contractor to send a written request for installment payments to the office designated in agency procedures.

**32.607–2 Deferment of collection.**

(a) All requests for deferment of collection must be submitted in writing to the contracting officer.

(1) If the contractor has appealed the debt under the procedures of the Disputes clause of the contract, the information with the request for deferment may be limited to an explanation of the contractor's financial condition.

(2) Actions filed by contractors under the Disputes Clause shall not suspend or delay collection.

(3) If there is no appeal pending or action filed under the Disputes clause of the contract, the following information about the contractor should be submitted with the request:

(i) Financial condition.

(ii) Contract backlog.

(iii) Projected cash receipts and requirements.

(iv) The feasibility of immediate payment of the debt.

(v) The probable effect on operations of immediate payment in full.

(b) Upon receipt of the contractor's written request, the contracting officer shall promptly provide a notification to the payment office and advise the payment office that the contractor's request is under consideration.

(c)(1) The contracting officer should consider any information necessary to develop a recommendation on the deferment request.

(2) The contracting officer shall forward the following to the office designated in agency procedures for a decision:

(i) A copy of the contractor's request for a deferment of collection.

(ii) A written recommendation on the request and the basis for the recommendation including the advisability of deferment to avoid possible overcollections.

(iii) A statement as to whether the contractor has an appeal pending or action filed under the Disputes clause of the contract and the docket number if the appeal has been filed.

(iv) A copy of the contracting officer's final decision (see 32.605).

(d) The office designated in agency procedures may authorize a deferment pending the resolution of appeal to avoid possible overcollections. The agency is required to use unexpired funds to pay interest on overcollections.

(e) Deferments pending disposition of appeal may be granted to small business concerns and financially weak contractors, balancing the need for Government security against loss and undue hardship on the contractor.

(f) The deferment agreement shall not provide that a claim of the Government will not become due and payable pending mutual agreement on the amount of the claim or, in the case of a dispute, until the decision is reached.

(g) At a minimum, the deferment agreement shall contain the following:

(1) A description of the debt.

(2) The date of first demand for payment.

(3) Notice of an interest charge, in conformity with 32.608 and the FAR clause at 52.232–17, Interest; or, in the case of a debt arising from a defective pricing or a CAS noncompliance overpayment, interest, as prescribed by the applicable Price Reduction for Defective Cost or Pricing Data or CAS clause (see 32.607(c)).

(4) Identification of the office to which the contractor is to send debt payments.

(5) A requirement for the contractor to submit financial information requested by the Government and for reasonable access to the contractor's records and property by Government representatives.

(6) Provision for the Government to terminate the deferment agreement and accelerate the maturity of the debt if the contractor defaults or if bankruptcy or insolvency proceedings are instituted by or against the contractor.

(7) Protective requirements that are considered by the Government to be prudent and feasible in the specific circumstances. The coverage of protective terms at 32.409 and 32.501–5 may be used as a guide.

(h) If a contractor appeal of the debt determination is pending, the deferment agreement shall also include a requirement that the contractor shall—

(1) Diligently prosecute the appeal; and

(2) Pay the debt in full when the appeal is decided, or when the parties reach agreement on the debt amount.

(i) The deferment agreement may provide for the right to make early payments without prejudice, for refund of overpayments, and for crediting of interest.

**32.608 Interest.**

**32.608–1 Interest charges.**

Unless specified otherwise in the clause at 52.232–17, Interest, interest charges shall apply to any contract debt unpaid after 30 days from the issuance of a demand unless—

(a) The contract is a kind excluded under 32.611; or

(b) The contract or debt has been exempted from interest charges under agency procedures.

**32.608–2 Interest credits.**

(a) An equitable interest credit shall be applied under the following circumstances:

(1) When the amount of debt initially determined is subsequently reduced; *e.g.*, through a successful appeal.

(2) When any amount collected by the Government is in excess of the amount found to be due on appeal under the Disputes Clause of the contract.

(3) When the collection procedures followed in a given case result in an overcollection of the debt due.

(4) When the responsible official determines that the Government has unduly delayed payments to the contractor on the same contract at some time during the period to which the interest charge applied, provided an interest penalty was not paid for such late payment.

(b) Any appropriate interest credits shall be computed under the following procedures:

(1) Interest at the rate under 52.232–17 shall be charged on the reduced debt from the date of collection by the Government until the date the monies are remitted to the contractor.

(2) Interest may not be reduced for any time between the due date under the demand and the period covered by a deferment of collection, unless the contract includes an interest clause; *e.g.*, the clause prescribed in 32.611.

(3) Interest shall not be credited in an amount that, when added to other amounts refunded or released to the contractor, exceeds the total amount

that has been collected, or withheld for the purpose of collecting the debt. This limitation shall be further reduced by the amount of any limitation applicable under paragraph (b)(2) of this subsection.

**32.609 Delays in receipt of notices or demands.**

If interest is accrued based on the date of the demand letter and delivery of the demand letter is delayed by the Government (*e.g.*, undue delay after dating at the originating office or delays in the mail), the date of the debt and accrual of interest shall be extended to a time that is fair and reasonable under the particular circumstances.

**32.610 Compromising debts.**

For debts under $100,000, excluding interest, the designated agency official may compromise the debt pursuant to the Federal Claims Collection Standards (31 CFR part 902) and agency regulations. Unless specifically authorized by agency procedures, contracting officers cannot compromise debts.

**32.611 Contract clause.**

(a) The contracting officer shall insert the clause at 52.232—17, Interest, in solicitations and contracts unless it is contemplated that the contract will be in one or more of the following categories:

(1) Contracts at or below the simplified acquisition threshold.

(2) Contracts with Government agencies.

(3) Contracts with a State or local government or instrumentality.

(4) Contracts with a foreign government or instrumentality.

(5) Contracts without any provision for profit or fee with a nonprofit organization.

(6) Contracts described in Subpart 5.5, Paid Advertisements.

(7) Any other exceptions authorized under agency procedures.

(b) The contracting officer may insert the FAR clause at 52.232–17, Interest, in solicitations and contracts when it is contemplated that the contract will be in any of the categories specified in 32.611(a).

## PART 33—PROTESTS, DISPUTES, AND APPEALS

**33.208 [Amended]**

■ 6. Amend section 33.208 by removing from paragraph (b) ''32.614'' and adding ''the clause at 52.232–17'' in its place.

**33.211 [Amended]**

■ 7. Amend section 33.211 by removing from paragraph (a)(4)(vi) ''32.610(b'') and adding ''32.604 and 32.605'' in its place.

## PART 36—CONSTRUCTION AND ARCHITECT-ENGINEER CONTRACTS

**36.608 [Amended]**

■ 8. Amend section 36.608 in the fourth sentence by removing ''collect'' and adding ''issue a demand for payment of'' in its place.

## PART 42—CONTRACT ADMINISTRATION AND AUDIT SERVICES

■ 9. Amend section 42.302 by revising paragraph (a)(17) to read as follows:

**42.302 Contract administration functions.**

(a) * * *

(17) Analyze quarterly limitation on payments statements and take action in accordance with Subpart 32.6 to recover overpayments from the contractor.

* * * * *

## PART 52—SOLICITATION PROVISIONS AND CONTRACT CLAUSES

■ 10. Amend section 52.212–4 by—

■ a. Revising the date of the clause;

■ b. Revising paragraph (i)(5);

■ c. Adding paragraph (i)(6); and

■ d. Amending Alternate I as follows:

■ 1. Revising the date of Alternate I;

■ 2. Revising paragraph (i)(5); and

■ 3. Redesignating paragraphs (i)(6) through (i)(9) as (i)(7) through (i)(10), respectively, and adding a new paragraph (i)(6).

The revised and added text reads as follows:

**52.212–4 Contract Terms and Conditions—Commercial Items.**

* * * * *

CONTRACT TERMS AND CONDITIONS—COMMERCIAL ITEMS (OCT 2008)

* * * * *

(i) * * *

(5) *Overpayments.* If the Contractor becomes aware of a duplicate contract financing or invoice payment or that the Government has otherwise overpaid on a contract financing or invoice payment, the Contractor shall—

(i) Remit the overpayment amount to the payment office cited in the contract along with a description of the overpayment including the—

(A) Circumstances of the overpayment (*e.g.*, duplicate payment, erroneous payment, liquidation errors, date(s) of overpayment);

(B) Affected contract number and delivery order number, if applicable;

(C) Affected contract line item or subline item, if applicable; and

(D) Contractor point of contact.

(ii) Provide a copy of the remittance and supporting documentation to the Contracting Officer.

(6) *Interest.* (i) All amounts that become payable by the Contractor to the Government under this contract shall bear simple interest from the date due until paid unless paid within 30 days of becoming due. The interest rate shall be the interest rate established by the Secretary of the Treasury as provided in Section 611 of the Contract Disputes Act of 1978 (Public Law 95–563), which is applicable to the period in which the amount becomes due, as provided in (i)(6)(v) of this clause, and then at the rate applicable for each six-month period as fixed by the Secretary until the amount is paid.

(ii) The Government may issue a demand for payment to the Contractor upon finding a debt is due under the contract.

(iii) *Final decisions.* The Contracting Officer will issue a final decision as required by 33.211 if—

(A) The Contracting Officer and the Contractor are unable to reach agreement on the existence or amount of a debt within 30 days;

(B) The Contractor fails to liquidate a debt previously demanded by the Contracting Officer within the timeline specified in the demand for payment unless the amounts were not repaid because the Contractor has requested an installment payment agreement; or

(C) The Contractor requests a deferment of collection on a debt previously demanded by the Contracting Officer (see 32.607–2).

(iv) If a demand for payment was previously issued for the debt, the demand for payment included in the final decision shall identify the same due date as the original demand for payment.

(v) Amounts shall be due at the earliest of the following dates:

(A) The date fixed under this contract.

(B) The date of the first written demand for payment, including any demand for payment resulting from a default termination.

(vi) The interest charge shall be computed for the actual number of calendar days involved beginning on the due date and ending on—

(A) The date on which the designated office receives payment from the Contractor;

(B) The date of issuance of a Government check to the Contractor from which an amount otherwise payable has been withheld as a credit against the contract debt; or

(C) The date on which an amount withheld and applied to the contract debt would otherwise have become payable to the Contractor.

(vii) The interest charge made under this clause may be reduced under the procedures prescribed in 32.608–2 of the Federal Acquisition Regulation in effect on the date of this contract.

* * * * *

Alternate I (OCT 2008). * * *

* * * * *

(i) * * *

(5) *Overpayments/Underpayments.* Each payment previously made shall be subject to reduction to the extent of amounts, on preceding invoices, that are found by the Contracting Officer not to have been properly payable and shall also be subject to reduction for overpayments or to increase for underpayments. The Contractor shall

promptly pay any such reduction within 30 days unless the parties agree otherwise. The Government within 30 days will pay any such increases, unless the parties agree otherwise. The Contractor's payment will be made by check. If the Contractor becomes aware of a duplicate invoice payment or that the Government has otherwise overpaid on an invoice payment, the Contractor shall—

(i) Remit the overpayment amount to the payment office cited in the contract along with a description of the overpayment including the—

(A) Circumstances of the overpayment (*e.g.*, duplicate payment, erroneous payment, liquidation errors, date(s) of overpayment);

(B) Affected contract number and delivery order number, if applicable;

(C) Affected contract line item or subline item, if applicable; and

(D) Contractor point of contact.

(ii) Provide a copy of the remittance and supporting documentation to the Contracting Officer.

(6)(i) All amounts that become payable by the Contractor to the Government under this contract shall bear simple interest from the date due until paid unless paid within 30 days of becoming due. The interest rate shall be the interest rate established by the Secretary of the Treasury, as provided in section 611 of the Contract Disputes Act of 1978 (Public Law 95–563), which is applicable to the period in which the amount becomes due, and then at the rate applicable for each six month period as established by the Secretary until the amount is paid.

(ii) The Government may issue a demand for payment to the Contractor upon finding a debt is due under the contract.

(iii) *Final Decisions.* The Contracting Officer will issue a final decision as required by 33.211 if—

(A) The Contracting Officer and the Contractor are unable to reach agreement on the existence or amount of a debt in a timely manner;

(B) The Contractor fails to liquidate a debt previously demanded by the Contracting Officer within the timeline specified in the demand for payment unless the amounts were not repaid because the Contractor has requested an installment payment agreement; or

(C) The Contractor requests a deferment of collection on a debt previously demanded by the Contracting Officer (see FAR 32.607–2).

(iv) If a demand for payment was previously issued for the debt, the demand for payment included in the final decision shall identify the same due date as the original demand for payment.

(v) Amounts shall be due at the earliest of the following dates:

(A) The date fixed under this contract.

(B) The date of the first written demand for payment, including any demand for payment resulting from a default termination.

(vi) The interest charge shall be computed for the actual number of calendar days involved beginning on the due date and ending on—

(A) The date on which the designated office receives payment from the Contractor;

(B) The date of issuance of a Government check to the Contractor from which an amount otherwise payable has been withheld as a credit against the contract debt; or

(C) The date on which an amount withheld and applied to the contract debt would otherwise have become payable to the Contractor.

(vii) The interest charge made under this clause may be reduced under the procedures prescribed in 32.608–2 of the Federal Acquisition Regulation in effect on the date of this contract.

(viii) Upon receipt and approval of the invoice designated by the Contractor as the ''completion invoice'' and supporting documentation, and upon compliance by the Contractor with all terms of this contract, any outstanding balances will be paid within 30 days unless the parties agree otherwise. The completion invoice, and supporting documentation, shall be submitted by the Contractor as promptly as practicable following completion of the work under this contract, but in no event later than 1 year (or such longer period as the Contracting Officer may approve in writing) from the date of completion.

* * * * *

■ 11. Amend section 52.213–4 by revising the date of the clause and paragraph (a)(2)(iv) to read as follows:

**52.213–4 Terms and Conditions—Simplified Acquisitions (Other Than Commercial Items).**

* * * * *

TERMS AND CONDITIONS—SIMPLIFIED ACQUISITIONS (OTHER THAN COMMERCIAL ITEMS) (OCT 2008)

* * * * *

(a) * * *

(2) * * *

(iv) 52.232–25, Prompt Payment (OCT 2008).

* * * * *

■ 12. Revise section 52.232–17 to read as follows:

**52.232–17 Interest.**

As prescribed in 32.611(a) and (b), insert the following clause:

INTEREST (OCT 2008)

(a) Except as otherwise provided in this contract under a Price Reduction for Defective Cost or Pricing Data clause or a Cost Accounting Standards clause, all amounts that become payable by the Contractor to the Government under this contract shall bear simple interest from the date due until paid unless paid within 30 days of becoming due. The interest rate shall be the interest rate established by the Secretary of the Treasury as provided in Section 611 of the Contract Disputes Act of 1978 (Public Law 95–563), which is applicable to the period in which the amount becomes due, as provided in paragraph (e) of this clause, and then at the rate applicable for each six-month period as fixed by the Secretary until the amount is paid.

(b) The Government may issue a demand for payment to the Contractor upon finding a debt is due under the contract.

(c) *Final Decisions.* The Contracting Officer will issue a final decision as required by 33.211 if—

(1) The Contracting Officer and the Contractor are unable to reach agreement on the existence or amount of a debt in a timely manner;

(2) The Contractor fails to liquidate a debt previously demanded by the Contracting Officer within the timeline specified in the demand for payment unless the amounts were not repaid because the Contractor has requested an installment payment agreement; or

(3) The Contractor requests a deferment of collection on a debt previously demanded by the Contracting Officer (see 32.607–2).

(d) If a demand for payment was previously issued for the debt, the demand for payment included in the final decision shall identify the same due date as the original demand for payment.

(e) Amounts shall be due at the earliest of the following dates:

(1) The date fixed under this contract.

(2) The date of the first written demand for payment, including any demand for payment resulting from a default termination.

(f) The interest charge shall be computed for the actual number of calendar days involved beginning on the due date and ending on—

(1) The date on which the designated office receives payment from the Contractor;

(2) The date of issuance of a Government check to the Contractor from which an amount otherwise payable has been withheld as a credit against the contract debt; or

(3) The date on which an amount withheld and applied to the contract debt would otherwise have become payable to the Contractor.

(g) The interest charge made under this clause may be reduced under the procedures prescribed in 32.608–2 of the Federal Acquisition Regulation in effect on the date of this contract.

(End of clause)

■ 13. Amend section 52.232–25 by revising the date of the clause and paragraph (d) to read as follows:

**52.232–25 Prompt Payment.**

* * * * *

PROMPT PAYMENT (OCT 2008)

* * * * *

(d) *Overpayments.* If the Contractor becomes aware of a duplicate contract financing or invoice payment or that the Government has otherwise overpaid on a contract financing or invoice payment, the Contractor shall—

(1) Remit the overpayment amount to the payment office cited in the contract along with a description of the overpayment including the—

(i) Circumstances of the overpayment (*e.g.*, duplicate payment, erroneous payment, liquidation errors, date(s) of overpayment);

(ii) Affected contract number and delivery order number if applicable;

(iii) Affected contract line item or subline item, if applicable; and

(iv) Contractor point of contact.

(2) Provide a copy of the remittance and supporting documentation to the Contracting Officer.

(End of clause)

* * * * *

■ 14. Amend section 52.232–26 by revising the date of the clause and paragraph (c) to read as follows:

**52.232–26 Prompt Payment for Fixed-Price Architect-Engineer Contracts.**

* * * * *

PROMPT PAYMENT FOR FIXED-PRICE ARCHITECT-ENGINEER CONTRACTS (OCT 2008)

* * * * *

(c) *Overpayments.* If the Contractor becomes aware of a duplicate contract financing or invoice payment or that the Government has otherwise overpaid on a contract financing or invoice payment, the Contractor shall—

(1) Remit the overpayment amount to the payment office cited in the contract along with a description of the overpayment including the—

(i) Circumstances of the overpayment (*e.g.*, duplicate payment, erroneous payment, liquidation errors, date(s) of overpayment);

(ii) Affected contract number and delivery order number if applicable;

(iii) Affected contract line item or subline item, if applicable; and

(iv) Contractor point of contact.

(2) Provide a copy of the remittance and supporting documentation to the Contracting Officer.

(End of clause)

■ 15. Amend section 52.232–27 by revising the date of the clause and paragraph (l) to read as follows:

**52.232–27 Prompt Payment for Construction Contracts.**

* * * * *

PROMPT PAYMENT FOR CONSTRUCTION CONTRACTS (OCT 2008)

* * * * *

(l) *Overpayments.* If the Contractor becomes aware of a duplicate contract financing or invoice payment or that the Government has otherwise overpaid on a contract financing or invoice payment, the Contractor shall—

(1) Remit the overpayment amount to the payment office cited in the contract along with a description of the overpayment including the—

(i) Circumstances of the overpayment (*e.g.*, duplicate payment, erroneous payment, liquidation errors, date(s) of overpayment);

(ii) Affected contract number and delivery order number if applicable;

(iii) Affected contract line item or subline item, if applicable; and

(iv) Contractor point of contact.

(2) Provide a copy of the remittance and supporting documentation to the Contracting Officer.

(End of clause)

[FR Doc. E8–21382 Filed 9–16–08; 8:45 am]

BILLING CODE 6820–EP–S

## DEPARTMENT OF DEFENSE

## GENERAL SERVICES ADMINISTRATION

## NATIONAL AERONAUTICS AND SPACE ADMINISTRATION

## 48 CFR Part 12

**[FAC 2005–27; FAR Case 2007–022; Item VII; Docket 2008–0001; Sequence 13]**

**RIN 9000–AL03**

## Federal Acquisition Regulation; FAR Case 2007–022, Subcontractor Requests for Bonds

**AGENCIES:** Department of Defense (DoD), General Services Administration (GSA), and National Aeronautics and Space Administration (NASA).

**ACTION:** Final rule.

**SUMMARY:** The Civilian Agency Acquisition Council and the Defense Acquisition Regulations Council (Councils) have agreed on a final rule amending the Federal Acquisition Regulation (FAR) to clarify that the clause ''Prospective Subcontractor Requests for Bonds'' does not apply to commercial items.

**DATES:** *Effective Date:* September 17, 2008.

**FOR FURTHER INFORMATION CONTACT:** Mr. Michael Jackson, Procurement Analyst, at (202) 208–4949 for clarification of content. For information pertaining to status or publication schedules, contact the FAR Secretariat at (202) 501–4755. Please cite FAC 2005–27, FAR case 2007–022.

**SUPPLEMENTARY INFORMATION:**

### A. Background

The FAR clause at FAR 52.228–12, Prospective Subcontractor Requests for Bonds, implemented Section 806(a)(3) of Public Law 102–190, as amended, which specifies that, upon the request of a prospective subcontractor or supplier offering to furnish labor or material for the performance of a construction contract for which a payment bond has been furnished to the United States pursuant to the Miller Act, the contractor shall promptly provide a copy of such payment bond to the requestor. In conjunction with performance bonds, payment bonds are used in Government construction contracts to secure fulfillment of the contractor's obligations under the contract and to assure that the contractor makes all payments, as required by law, to persons furnishing labor or material in performance of the contract. The FAR clause at 52.228–12, which has an effective date of October 1, 1995, reflects the addition of Section 806(a)(3) of Pub L. 102–190, as amended by Sections 2091 and 8105 of Pub. L. 103–355, at FAR 12.503(a) and 12.504(a). When the implementation of FAR 28.106–4 occurred, the appropriate incorporation of the FAR clause at 52.228–12, Prospective Subcontractor Requests for Bonds, was accomplished, but not the incorporation of the associated statutory citation in FAR 12.503 and 12.504.

This is not a significant regulatory action and, therefore, was not subject to review under Section 6(b) of Executive Order 12866, Regulatory Planning and Review, dated September 30, 1993. This rule is not a major rule under 5 U.S.C. 804.

### B. Regulatory Flexibility Act

The Regulatory Flexibility Act does not apply to this rule. This final rule does not constitute a significant FAR revision within the meaning of FAR 1.501 and Pub. L. 98–577, and publication for public comments is not required. However, the Councils will consider comments from small entities concerning the affected FAR Part 12 in accordance with 5 U.S.C. 610. Interested parties must submit such comments separately and should cite 5 U.S.C. 601, *et seq.* (FAC 2005–27, FAR case 2007–022), in correspondence.

### C. Paperwork Reduction Act

The Paperwork Reduction Act does not apply because the changes to the FAR do not impose information collection requirements that require the approval of the Office of Management and Budget under 44 U.S.C. 3501, *et seq.*

### List of Subjects in 48 CFR Part 12

Government procurement.

Dated: September 9, 2008.

**Al Matera,**

*Director, Office of Acquisition Policy.*

■ Therefore, DoD, GSA, and NASA amend 48 CFR part 12 as set forth below:

## PART 12—ACQUISITION OF COMMERCIAL ITEMS

■ 1. The authority citation for 48 CFR part 12 continues to read as follows:

**Authority:** 40 U.S.C. 121(c); 10 U.S.C. chapter 137; and 42 U.S.C. 2473(c).

■ 2. Amend section 12.503 by revising the section heading and adding paragraph (a)(7) to read as follows:

**12.503 Applicability of certain laws to Executive agency contracts for the acquisition of commercial items.**

(a) * * *

(7) Section 806(a)(3) of Pub. L. 102–190, as amended by Sections 2091 and 8105 of Pub. L. 103–355, Payment Protections for Subcontractors and Suppliers (see 28.106–6).

* * * * *

■ 3. Amend section 12.504 by adding paragraph (a)(13) to read as follows:

**12.504 Applicability of certain laws to subcontracts for the acquisition of commercial items.**

(a) * * *

(13) Section 806(a)(3) of Pub. L. 102–190, as amended by Sections 2091 and 8105 of Pub. L. 103–355, Payment Protections for Subcontractors and Suppliers (see 28.106–6).

* * * * *

[FR Doc. E8–21381 Filed 9–16–08; 8:45 am]

BILLING CODE 6820–EP–S

## DEPARTMENT OF DEFENSE

## GENERAL SERVICES ADMINISTRATION

## NATIONAL AERONAUTICS AND SPACE ADMINISTRATION

## 48 CFR Part 13

**[FAC 2005–27; FAR Case 2008–002; Item VIII; Docket 2008–0001; Sequence 11]**

**RIN 9000–AL02**

## Federal Acquisition Regulation; FAR Case 2008–002, Extension of Authority for Use of Simplified Acquisition Procedures for Certain Commercial Items

**AGENCIES:** Department of Defense (DoD), General Services Administration (GSA), and National Aeronautics and Space Administration (NASA).

**ACTION:** Final rule.

**SUMMARY:** The Civilian Agency Acquisition Council and the Defense Acquisition Regulations Council (Councils) have agreed on a final rule amending the Federal Acquisition Regulation (FAR) to implement Section 822 of the National Defense Authorization Act for Fiscal Year 2008 (Pub. L. 110–181).

**DATES:** *Effective Date:* September 17, 2008.

**FOR FURTHER INFORMATION CONTACT** Mr. Michael Jackson, Procurement Analyst, at (202) 208–4949 for clarification of content. For information pertaining to status or publication schedules, contact the FAR Secretariat at (202) 501–4755. Please cite FAC 2005–27, FAR case 2008–002.

**SUPPLEMENTARY INFORMATION:**

### A. Background

This final rule amends the FAR to implement Section 822 of the National Defense Authorization Act for Fiscal Year 2008 (Pub. L. 110–181). Section 822 amends Section 4202(e) of the Clinger-Cohen Act of 1996 (division D of Pub. L. 104–106; 110 Stat. 652; 10 U.S.C. 2304 note) by extending until January 1, 2010, the timeframe in which an agency may use simplified procedures to purchase commercial items in amounts greater than the simplified acquisition threshold, but not exceeding $5,500,000 ($11 million for acquisitions as described in 13.500(e)).

This is not a significant regulatory action and, therefore, was not subject to review under Section 6(b) of Executive Order 12866, Regulatory Planning and Review, dated September 30, 1993. This rule is not a major rule under 5 U.S.C. 804.

### B. Regulatory Flexibility Act

The Regulatory Flexibility Act does not apply to this rule. This final rule does not constitute a significant FAR revision within the meaning of FAR 1.501 and Pub. L. 98–577, and publication for public comments is not required. However, the Councils will consider comments from small entities concerning the affected FAR Part 13 in accordance with 5 U.S.C. 610. Interested parties must submit such comments separately and should cite 5 U.S.C. 601, *et seq.* (FAC 2005–27, FAR case 2008–002), in all correspondence.

### C. Paperwork Reduction Act

The Paperwork Reduction Act does not apply because the changes to the FAR do not impose information collection requirements that require the approval of the Office of Management and Budget under 44 U.S.C. 3501, *et seq.*

### List of Subjects in 48 CFR Part 13

Government procurement.

Dated: September 9, 2008.

**Al Matera,**

*Director, Office of Acquisition Policy.*

■ Therefore, DoD, GSA, and NASA amend 48 CFR part 13 as set forth below:

## PART 13—SIMPLIFIED ACQUISITION PROCEDURES

■ 1. The authority citation for 48 CFR part 13 continues to read as follows:

**Authority:** 40 U.S.C. 121(c); 10 U.S.C. chapter 137; and 42 U.S.C. 2473(c).

**13.500 [Amended]**

■ 2. Amend section 13.500 by removing from paragraph (d) ''January 1, 2008'' and adding ''January 1, 2010'' in its place.

[FR Doc. E8–21380 Filed 9–16–08; 8:45 am]

BILLING CODE 6820–EP–S

## DEPARTMENT OF DEFENSE

## GENERAL SERVICES ADMINISTRATION

## NATIONAL AERONAUTICS AND SPACE ADMINISTRATION

## 48 CFR Part 16

**[FAC 2005–27; FAR Case 2008–006; Item IX; Docket 2008–01, Sequence 5]**

**RIN 9000–AL05**

## Federal Acquisition Regulation; FAR Case 2008–006, Enhanced Competition for Task and Delivery Order Contracts—Section 843 of the Fiscal Year 2008 National Defense Authorization Act

**AGENCIES:** Department of Defense (DoD), General Services Administration (GSA), and National Aeronautics and Space Administration (NASA).

**ACTION:** Interim rule with request for comments.

**SUMMARY:** The Civilian Agency Acquisition Council and the Defense Acquisition Regulations Council (Councils) have agreed on an interim rule amending the Federal Acquisition Regulation (FAR) to implement the Fiscal Year 2008 National Defense Authorization Act, Section 843 ''Enhanced Competition for Task and Delivery Order Contracts'' (FY08 NDAA). Section 843 of the FY08 NDAA stipulates several requirements regarding enhancing competition within Federal contracting.

**DATES:** *Effective Date*: September 17, 2008.

*Applicability date*: FAR 16.503 and 16.504, as amended by this rule, are applicable to single award task or delivery order contracts awarded on or after May 27, 2008. FAR 16.505, as amended by this rule, is applicable to orders awarded on or after May 27, 2008 on existing contracts as well as new contracts.

*Comment Date*: Interested parties should submit written comments to the FAR Secretariat on or before November 17, 2008 to be considered in the formulation of a final rule.

**ADDRESSES:** Submit comments identified by FAC 2005–27, FAR case 2008–006, by any of the following methods:

• Regulations.gov: *http://www.regulations.gov*.

Submit comments via the Federal eRulemaking portal by inputting ''FAR Case 2008–006'' under the heading ''Comment or Submission''. Select the link ''Send a Comment or Submission'' that corresponds with FAR Case 2008–006. Follow the instructions provided to complete the ''Public Comment and Submission Form''. Please include your name, company name (if any), and ''FAR Case 2008–006'' on your attached document.

• Fax: 202–501–4067.

• Mail: General Services Administration, Regulatory Secretariat (VPR), 1800 F Street, NW, Room 4041, ATTN: Laurieann Duarte, Washington, DC 20405.

*Instructions*: Please submit comments only and cite FAC 2005–27, FAR case 2008–006, in all correspondence related to this case. All comments received will be posted without change to *http://www.regulations.gov*, including any personal and/or business confidential information provided.

**FOR FURTHER INFORMATION CONTACT:** Mr. William Clark, Procurement Analyst, at (202) 219–1813 for clarification of content. Please cite FAC 2005–27, FAR case 2008–006. For information pertaining to status or publication schedules, contact the FAR Secretariat at (202) 501–4755.

**SUPPLEMENTARY INFORMATION:**

## A. Background

The Fiscal Year 2008 National Defense Authorization Act (Pub. L. 110–181), Section 843 ''Enhanced Competition for Task and Delivery Order Contracts'' includes several requirements regarding enhancing competition within the Federal contracting framework. The provisions of Section 843 include: (1) Limitation on single award task and delivery order contracts greater than $100 million; (2) Enhanced competition for task and delivery orders in excess of $5 million; and (3) Protest on orders on the grounds that the order increases the scope, period, maximum value of the contract under which the order is issued; or valued in excess of $10 million.

The FAR changes are applicable to Indefinite-Delivery Requirements, and Indefinite-Quantity, type contracts where issuance of a task or delivery order is placed pursuant to FAR Subpart 16.5. The purpose of this statute is to improve opportunities for competition through fair opportunity, transparency and accountability in contracting.

1. *Limitation on single award task or delivery order contracts greater than $100 million*. Section 843 states that no task or delivery order contract in an amount estimated to exceed $100 million (including all options) may be awarded to a single source unless the head of the agency determines in writing that—

a. The task or delivery orders expected under the contract are so integrally related that only a single source can reasonably perform the work;

b. The contract provides only for firm-fixed price task or delivery orders;

c. Only one source is qualified and capable of performing the work at a reasonable price to the Government; or

d. It is necessary in the public interest to award the contract to a single source due to exceptional circumstances.

The agency head must also notify Congress within 30 days after making the determination in the public interest. The objective of this provision is to place greater emphasis on awarding multiple award contracts and enhancing the fair opportunity provisions within FAR Subpart 16.5. Competition of orders leads to improved contractor performance, stimulation of technological solutions, and reduction of costs over time. The tenets of this provision strike at the core of enhancing competition and ensuring competition continues to exist even after award of the initial contract vehicles. Notwithstanding the limitation on single awards, there are occasions when a single award is necessary. For these occasions, Section 843 authorizes exceptions for awarding single award task or delivery order contracts that exceed $100 million.

2. *Enhanced competition for orders in excess of $5 million*. This Section 843 requirement emphasizes the importance of following certain specified procedures in the competitive placement of task or delivery orders with an expected value in excess of $5 million (including options) placed against multiple award contracts. All awardees are to be given a fair opportunity to be considered for each order, at a minimum, a notice of the order with a clear statement of requirements, a reasonable response period, disclosure of the significant evaluation factors and subfactors, and where award is made on a best value basis, a statement documenting the basis for award and the relative importance of quality and price or cost factors. Section 843 also provides an opportunity for a vendor to request a debriefing on orders valued over $5 million. The goal is to improve the transparency and accountability of agency award decisions. The new requirements apply to orders on existing contracts, as well as on new contracts.

3. *Protest of orders greater than $10 million*. This Section 843 requirement provides a mechanism to protest task or delivery orders valued in excess of $10 million (including options) under multiple award contracts and states that the Comptroller General shall have exclusive jurisdiction over such protests. In particular, protests are authorized on the grounds that—

(a) The order increases the scope, period, or maximum value of the contract under which the order is issued; or

(b) As a matter of right for orders valued in excess of $10 million. This provision provides for greater accountability, oversight and discipline within the Federal acquisition framework, when coupled with the requirement of post award debriefings. The existing requirement to protest orders under section 16.505(a)(9) and the newly added requirement for orders greater than $10 million expire May 27, 2011, unless extended by a new statute. The protest authority applies to orders on existing contracts, as well as on new contracts.

This is not a significant regulatory action and, therefore, was not subject to review under Section 6(b) of Executive Order 12866, Regulatory Planning and Review, dated September 30, 1993. This rule is not a major rule under 5 U.S.C. 804.

## B. Regulatory Flexibility Act

The interim rule is not expected to have a significant economic impact on a substantial number of small entities within the meaning of the Regulatory Flexibility Act, 5 U.S.C. 601, *et seq.*, because this rule does not revise or change existing regulations pertaining to small business concerns seeking Government contracts. Therefore, an Initial Regulatory Flexibility Analysis has not been performed. The Councils will consider comments from small entities concerning the affected FAR Part 16 in accordance with 5 U.S.C. 610. Interested parties must submit such comments separately and should cite 5 U.S.C 601, *et seq.* (FAC 2005–27, FAR case 2008–006), in correspondence.

## C. Paperwork Reduction Act

The Paperwork Reduction Act does not apply because the changes to the FAR do not impose information collection requirements that require the approval of the Office of Management

and Budget under 44 U.S.C. 3501, *et seq.*

**D. Determination to Issue an Interim Rule**

A determination has been made under the authority of the Secretary of Defense (DoD), the Administrator of General Services (GSA), and the Administrator of the National Aeronautics and Space Administration (NASA) that urgent and compelling reasons exist to promulgate this interim rule without prior opportunity for public comment. This action is necessary because provisions of the Fiscal Year 2008 National Defense Authorization Act Section 843 go into effect on May 27, 2008. The Councils believe that the interim rule in the FAR will provide the contracting officer the relevant regulatory guidance needed when addressing requirements outlined in this notice. The rule will also benefit industry in regards to the requirements for strengthening competition among orders, and the ability to protest orders. However, pursuant to Pub. L. 98–577 and FAR 1.501, the Councils will consider public comments received in response to this interim rule in the formation of the final rule.

**List of Subjects in 48 CFR Part 16**

Government procurement.

Dated: September 9, 2008.

**Al Matera,**

*Director, Office of Acquisition Policy.*

■ Therefore, DoD, GSA, and NASA amend 48 CFR part 16 as set forth below:

## PART 16—TYPES OF CONTRACTS

■ 1. The authority citation for 48 CFR part 16 continues to read as follows:

**Authority:** 40 U.S.C. 121(c); 10 U.S.C. chapter 137; and 42 U.S.C. 2473(c).

■ 2. Amend section 16.503 by revising paragraph (b) to read as follows:

**16.503 Requirements contracts.**

* * * * *

(b) *Application.* (1) A requirements contract may be appropriate for acquiring any supplies or services when the Government anticipates recurring requirements but cannot predetermine the precise quantities of supplies or services that designated Government activities will need during a definite period.

(2) No requirements contract in an amount estimated to exceed $100 million (including all options) may be awarded to a single source unless a determination is executed in accordance with 16.504(c)(1)(ii)(D).

* * * * *

■ 3. Amend section 16.504 by removing from paragraph (a)(4)(v) ''16.505(b)(5)'' and adding ''16.505(b)(6)'' in its place; and adding paragraph (c)(1)(ii)(D) to read as follows:

**16.504 Indefinite-quantity contracts.**

* * * * *

(c) * * *

(1) * * *

(ii) * * *

(D)(*1*) No task or delivery order contract in an amount estimated to exceed $100 million (including all options) may be awarded to a single source unless the head of the agency determines in writing that—

(*i*) The task or delivery orders expected under the contract are so integrally related that only a single source can reasonably perform the work;

(*ii*) The contract provides only for firm-fixed price (see 16.202) task or delivery orders for—

(*A*) Products for which unit prices are established in the contract; or

(*B*) Services for which prices are established in the contract for the specific tasks to be performed;

(*iii*) Only one source is qualified and capable of performing the work at a reasonable price to the Government; or

(*iv*) It is necessary in the public interest to award the contract to a single source due to exceptional circumstances.

(*2*) The head of the agency must notify Congress within 30 days after any determination under paragraph (c)(1)(ii)(D)(*1*)(*iv*) of this section.

(*3*) The requirement for a determination for a single award contract greater than $100 million applies in addition to the requirements of Subpart 6.3.

* * * * *

■ 4. Amend section 16.505 by—

■ a. Revising paragraph (a)(9);

■ b. Adding to the end of the fourth sentence before the period of paragraph (b)(1)(ii) ''and the order does not exceed $5 million'';

■ c. Redesignating paragraph (b)(1)(iii) as (b)(1)(iv); and adding a new paragraph (b)(1)(iii); and

■ d. Redesignating paragraphs (b)(4) and (b)(5) as paragraphs (b)(5) and (b)(6); and adding a new paragraph (b)(4).

■ The revised text reads as follows:

**16.505 Ordering.**

(a) * * *

(9)(i) No protest under Subpart 33.1 is authorized in connection with the issuance or proposed issuance of an order under a task-order contract or delivery-order contract, except for—

(A) A protest on the grounds that the order increases the scope, period, or maximum value of the contract; or

(B) *A protest of an order valued in excess of $10 million.* Protests of orders in excess of $10 million may only be filed with the Government Accountability Office, in accordance with the procedures at 33.104.

(ii) The authority to protest the placement of an order under this subpart expires on May 27, 2011. (10 U.S.C. 2304a(d) and 2304c(d), and 41 U.S.C. 253h(d) and 253j(d)).

(b) * * *

(1) * * *

(iii) *Orders exceeding $5 million.* For task or delivery orders in excess of $5 million, the requirement to provide all awardees a fair opportunity to be considered for each order shall include, at a minimum—

(A) A notice of the task or delivery order that includes a clear statement of the agency's requirements;

(B) A reasonable response period;

(C) Disclosure of the significant factors and subfactors, including cost or price, that the agency expects to consider in evaluating proposals, and their relative importance;

(D) Where award is made on a best value basis, a written statement documenting the basis for award and the relative importance of quality and price or cost factors; and

(E) An opportunity for a postaward debriefing in accordance with paragraph (b)(4) of this section.

* * * * *

(4) *Postaward Notices and Debriefing of Awardees for Orders Exceeding $5 million.* The contracting officer shall notify unsuccessful awardees when the total price of a task or delivery order exceeds $5 million.

(i) The procedures at 15.503(b)(1) shall be followed when providing postaward notification to unsuccessful awardees.

(ii) The procedures at 15.506 shall be followed when providing postaward debriefing to unsuccessful awardees.

(iii) A summary of the debriefing shall be included in the task or delivery order file.

* * * * *

[FR Doc. E8–21379 Filed 9–16–08; 8:45 am]

BILLING CODE 6820–EP–S

**DEPARTMENT OF DEFENSE**

**GENERAL SERVICES ADMINISTRATION**

**NATIONAL AERONAUTICS AND SPACE ADMINISTRATION**

**48 CFR Part 23**

**[FAC 2005–27; FAR Case 2006–025; Item X; Docket 2007–0001; Sequence 18]**

**RIN 9000–AK76**

## Federal Acquisition Regulation; FAR Case 2006–025, Online Representations and Certifications Application Review

**AGENCIES:** Department of Defense (DoD), General Services Administration (GSA), and National Aeronautics and Space Administration (NASA).

**ACTION:** Final rule.

**SUMMARY:** The Civilian Agency Acquisition Council and the Defense Acquisition Regulations Council (Councils) have agreed to adopt as final, without change, an interim rule amending the Federal Acquisition Regulation (FAR) to revise the prescription for use of clauses for the use of Environmental Protection Agency-designated products and toxic chemical release reporting.

**DATES:** *Effective Date:* September 17, 2008.

**FOR FURTHER INFORMATION CONTACT** Mr. Ernest Woodson Procurement Analyst, at (202) 501–3775 for clarification of content. For information pertaining to status or publication schedules, contact the FAR Secretariat at (202) 501–4755. Please cite FAC 2005–27, FAR case 2006–025.

**SUPPLEMENTARY INFORMATION:**

### A. Background

DoD, GSA, and NASA published an interim rule in the **Federal Register** at 72 FR 46359 on August 17, 2007, to amend FAR 23.406 and 23.906 to revise the prescriptions for the use of 52.223–9 and 52.223–14 to provide for their use under the same circumstances as the prescription for use of their associated provisions. These revisions ensure compliance with the requirements of 40 CFR part 247 and 42 U.S.C. 11023. The comment period closed October 16, 2007. No public comments were received on the rule. The Councils have determined to adopt the interim rule as final, without change.

This is not a significant regulatory action and, therefore, was not subject to review under Section 6(b) of Executive Order 12866, Regulatory Planning and Review, dated September 30, 1993. This rule is not a major rule under 5 U.S.C. 804.

### B. Regulatory Flexibility Act

The Department of Defense, the General Services Administration, and the National Aeronautics and Space Administration certify that this final rule will not have a significant economic impact on a substantial number of small entities within the meaning of the Regulatory Flexibility Act, 5 U.S.C. 601, *et seq.*, because the rule revises language that the Office of Management and Budget (OMB) has already approved for obtaining representations and certifications under OMB Control Numbers 9000–0134 and 9000–0139 for compliance with Section 6002 of the Resource Conservation and Recovery Act and the requirements of Executive Order 12969, Emergency Planning and Community Right-to-Know Act of 1986. No comments were received with regard to an impact on small entities.

### C. Paperwork Reduction Act

The Paperwork Reduction Act does apply; however, these changes to the FAR do not impose additional information collection requirements to the paperwork burden previously approved under OMB Control Numbers 9000–0134 and 9000–0139.

### List of Subjects in 48 CFR Part 23

Government procurement.

Dated: September 9, 2008.

**Al Matera,**

*Director, Office of Acquisition Policy.*

### Interim Rule Adopted as Final Without Change

■ Accordingly, under the authority of 40 U.S.C. 121, the interim rule amending 48 CFR part 23 which was published in the **Federal Register** at 72 FR 46359, August 17, 2007, is adopted as a final rule without change.

[FR Doc. E8–21378 Filed 9–16–08; 8:45 am]

BILLING CODE 6820–EP–S

**DEPARTMENT OF DEFENSE**

**GENERAL SERVICES ADMINISTRATION**

**NATIONAL AERONAUTICS AND SPACE ADMINISTRATION**

**48 CFR Parts 30 and 52**

**[FAC 2005–27; FAR Case 2007–002; Item XI; Docket 2008–0001, Sequence 7]**

**RIN 9000–AL09**

## Federal Acquisition Regulation; FAR Case 2007–002, Cost Accounting Standards (CAS) Administration and Associated Federal Acquisition Regulation Clauses

**AGENCIES:** Department of Defense (DoD), General Services Administration (GSA), and National Aeronautics and Space Administration (NASA).

**ACTION:** Interim rule with request for comments.

**SUMMARY:** The Civilian Agency Acquisition Council and the Defense Acquisition Regulations Council (Councils) have agreed on an interim rule amending the Federal Acquisition Regulation (FAR) to revise the contract clauses related to the administration of the Cost Accounting Standards (CAS) to maintain consistency between the FAR and CAS.

**DATES:** *Effective Date:* October 17, 2008.

*Comment Date:* Interested parties should submit written comments to the FAR Secretariat on or before November 17, 2008 to be considered in the formulation of a final rule.

**ADDRESSES:** Submit comments identified by FAC 2005–27, FAR case 2007–002, by any of the following methods:

- Regulations.gov: *http://www.regulations.gov*. Submit comments via the Federal eRulemaking portal by inputting ''FAR Case 2007–002'' under the heading ''Comment or Submission''. Select the link ''Send a Comment or Submission'' that corresponds with FAR Case 2007–002. Follow the instructions provided to complete the ''Public Comment and Submission Form''. Please include your name, company name (if any), and ''FAR Case 2007–002'' on your attached document.
- Fax: 202–501–4067.
- Mail: General Services Administration, Regulatory Secretariat (VPR), 1800 F Street, NW., Room 4041, ATTN: Laurieann Duarte, Washington, DC 20405.

*Instructions:* Please submit comments only and cite FAC 2005–27, FAR case 2007–002, in all correspondence related

to this case. All comments received will be posted without change to *http://www.regulations.gov*, including any personal and/or business confidential information provided.

**FOR FURTHER INFORMATION CONTACT** Mr. Ed Chambers, Procurement Analyst, at (202) 501–3221 for clarification of content. Please cite FAC 2005–27, FAR case 2007–002. For information pertaining to status or publication schedules, contact the FAR Secretariat at (202) 501–4755.

**SUPPLEMENTARY INFORMATION:**

## A. Background

On June 14, 2007, the CAS Board published a final rule (72 FR 32809) revising the contract clauses for CAS administration. The final rule effected the following changes:

• Amended the CAS applicability threshold to be the same as the threshold for compliance with the Truth in Negotiations Act (TINA) as required by section 822 of the 2006 National Defense Authorization Act (Pub. L. 109–163). The TINA threshold is currently $650,000.

• Changed the effective dates of 48 CFR 9903.201–3 and 48 CFR 9903.201–4(a), (c), and (e) from April 2000 and June 2000, respectively, to June 2007.

On June 14, 2000, the CAS Board published a final rule (65 FR 37470) revising the contract clauses for CAS administration. The final rule effected the following changes:

• Specified that the interest rate for overpayments by the Government under 48 CFR 9903.201–4(a), (c), and (e) shall be computed at the annual rate established under section 6621(a)(2) of the Internal Revenue Code of 1986 (26 U.S.C. 6621(a)(2)).

In order to maintain consistency between CAS and FAR in matters relating to the administration of CAS, the Councils are revising the FAR as outlined below:

1. FAR 30.201–4(b)(1), the prescription for use of the FAR clause at 52.230–3, is revised to reflect the amendments promulgated by the CAS Board on June 14, 2007.

2. *FAR 52.230*. The following clauses are revised to reflect the amendments promulgated by the CAS Board on June 14, 2007 and June 14, 2000:

a. FAR 52.230–2, Cost Accounting Standards.

b. FAR 52.230–3, Disclosure and Consistency of Cost Accounting Practices.

c. FAR 52.230–5, Cost Accounting Standards—Educational Institution.

3. FAR 52.230–1, Cost Accounting Standards Notices and Certification, is revised to reflect the amendments promulgated by the CAS Board on June 14, 2007.

4. FAR 52.230–4, Consistency of Cost Accounting Practices, is revised to maintain consistency with all other CAS clauses in specifying the rate to be used to compute interest on overpayments by the Government.

5. FAR 52.230–3(a)(3)(ii) is revised to correctly reference 48 CFR 9903.201–6(c), Desirable change.

This is not a significant regulatory action and, therefore, was not subject to review under Section 6(b) of Executive Order 12866, Regulatory Planning and Review, dated September 30, 1993. This rule is not a major rule under 5 U.S.C. 804.

## B. Regulatory Flexibility Act

The interim rule is not expected to have a significant economic impact on a substantial number of small entities within the meaning of the Regulatory Flexibility Act, 5 U.S.C. 601, *et seq.*, because contracts and subcontracts awarded to small businesses are exempt from the Cost Accounting Standards. Therefore, an Initial Regulatory Flexibility Analysis has not been performed. The Councils will consider comments from small entities concerning the affected FAR Parts 30 and 52 in accordance with 5 U.S.C. 610. Interested parties must submit such comments separately and should cite 5 U.S.C 601, *et seq.* (FAC 2005–27, FAR case 2007–002), in correspondence.

## C. Paperwork Reduction Act

The Paperwork Reduction Act does not apply because the changes to the FAR do not impose information collection requirements that require the approval of the Office of Management and Budget under 44 U.S.C. 3501, *et seq.*

## D. Determination to Issue an Interim Rule

A determination has been made under the authority of the Secretary of Defense (DoD), the Administrator of General Services (GSA), and the Administrator of the National Aeronautics and Space Administration (NASA) that urgent and compelling reasons exist to promulgate this interim rule without prior opportunity for public comment. This action is necessary because Federal Acquisition Regulation Part 30, Cost Accounting Standards, describes policies and procedures for applying the Cost Accounting Standards Board (CASB) rules and regulations (48 CFR Chapter 99 (FAR Appendix). Without this interim rule, FAR Part 30 is inconsistent with the Cost Accounting Standards that it is to describe. However, pursuant to Public Law 98–577 and FAR 1.501, the Councils will consider public comments received in response to this interim rule in the formation of the final rule.

## List of Subjects in 48 CFR Parts 30 and 52

Government procurement.

Dated: September 9, 2008.

**Al Matera,**

*Director, Office of Acquisition Policy.*

■ Therefore, DoD, GSA, and NASA amend 48 CFR parts 30 and 52 as set forth below:

■ 1. The authority citation for 48 CFR parts 30 and 52 continues to read as follows:

**Authority:** 40 U.S.C. 121(c); 10 U.S.C. chapter 137; and 42 U.S.C. 2473(c).

## PART 30—COST ACCOUNTING STANDARDS ADMINISTRATION

### 30.201–4 [Amended]

■ 2. Amend section 30.201–4 in paragraph (b)(1) by removing ''$500,000'' and adding ''$650,000'' in its place.

## PART 52—SOLICITATION PROVISIONS AND CONTRACT CLAUSES

### 52.230–1 [Amended]

■ 3. Amend section 52.230–1 by revising the date of the provision to read ''(OCT 2008)'', and by removing from I. Disclosure Statement—Cost Accounting Practices and Certification, in paragraph (a) ''$500,000'' and adding ''$650,000'' in its place.

### 52.230–2 [Amended]

■ 4. Amend section 52.230–2 by—

■ a. Revising the date of the clause to read ''(OCT 2008)'';

■ b. Removing from paragraph (a)(5) ''6621'' and adding ''6621(a)(2)'' in its place each time it appears; and

■ c. Removing from paragraph (d) ''$500,000'' and adding ''$650,000'' in its place.

■ 5. Amend section 52.230–3 by—

■ a. Revising the date of the clause;

■ b. Removing from paragraph (a)(3)(ii) ''9903.201–6(b)'' and adding ''9903.201–6(c)'' in its place;

■ c. Revising the second sentence of paragraph (a)(4); and

■ d. Removing from paragraph (d)(2) ''$500,000'' and adding ''$650,000'' in its place.

■ The revised text reads as follows:

### 52.230–3 Disclosure and Consistency of Cost Accounting Practices.

* * * * *

DISCLOSURE AND CONSISTENCY OF COST ACCOUNTING PRACTICES (OCT 2008)

(a) * * *

(4) * * * Such adjustment shall provide for recovery of the increased costs to the United States together with interest thereon computed at the annual rate established under section 6621(a)(2) of the Internal Revenue Code of 1986 (26 U.S.C. 6621(a)(2)), from the time the payment by the United States was made to the time the adjustment is effected.

* * * * *

**52.230–4 [Amended]**

■ 6. Amend section 52.230–4 by revising the date of the clause date to read ''(OCT 2008)''; and removing ''6621'' and adding ''6621(a)(2)'' in its place each time it appears.

**52.230–5 [Amended]**

■ 7. Amend section 52.230–5 by—

■ a. Revising the date of the clause date to read ''(OCT 2008)'';

■ b. Removing from paragraph (a)(5) ''6621'' and adding ''6621(a)(2)'' in its place each time it appears; and

■ c. Removing from paragraph (d)(2) ''$500,000'' and adding ''$650,000'' in its place.

[FR Doc. E8–21367 Filed 9–16–08; 8:45 am]

BILLING CODE 6820–EP–S

## DEPARTMENT OF DEFENSE

## GENERAL SERVICES ADMINISTRATION

## NATIONAL AERONAUTICS AND SPACE ADMINISTRATION

## 48 CFR Parts 30 and 52

**[FAC 2005–27; FAR Case 2006–004; Item XII; Docket 2008–0001; Sequence 14]**

**RIN 9000–AK58**

## Federal Acquisition Regulation; FAR Case 2006–004, CAS Administration

**AGENCIES:** Department of Defense (DoD), General Services Administration (GSA), and National Aeronautics and Space Administration (NASA).

**ACTION:** Final rule.

**SUMMARY:** The Civilian Agency Acquisition Council and the Defense Acquisition Regulations Council (Councils) have agreed to adopt a proposed rule, published in the **Federal Register** at 71 FR 58338, October 3, 2006, as a final rule, with minor changes. The rule amends the Federal Acquisition Regulation (FAR) to implement revisions to the regulations related to the administration of the Cost Accounting Standards (CAS) as they pertain to contracts with foreign concerns, including United Kingdom (U.K.) concerns.

**DATES:** *Effective Date:* October 17, 2008.

**FOR FURTHER INFORMATION CONTACT:** For clarification of content, contact Mr. Edward Chambers, at (202) 501–3221. For information pertaining to status or publication schedules, contact the Regulatory Secretariat at (202) 501–4755. Please cite FAC 2005–27, FAR case 2006–004.

**SUPPLEMENTARY INFORMATION:**

### A. Background

The Councils published a proposed rule in the **Federal Register** at 71 FR 58338, October 3, 2006, to maintain consistency between CAS and FAR in matters relating to disclosure requirements and the administration of CAS for contracts awarded to foreign concerns, including U.K. concerns.

This proposed rule was issued in response to the Cost Accounting Standards Board's interim rule (70 FR 29457, May 23, 2005) (finalized without change at 72 FR 32546, June 13, 2007), revising the applicability of CAS to U.K. contracts and subcontracts.

The Councils received no comments on the proposed rule and have adopted the proposed rule as a final rule with minor changes. The minor changes to 30.201–4(c) clarify that clause 52.230–4 need not be included in contracts with foreign concerns otherwise exempt from CAS coverage, and that foreign concerns do not include foreign governments, or their agents or instrumentalities.

This is not a significant regulatory action and, therefore, was not subject to review under Section 6(b) of Executive Order 12866, Regulatory Planning and Review, dated September 30, 1993. This rule is not a major rule under 5 U.S.C. 804.

### B. Regulatory Flexibility Act

The Department of Defense, the General Services Administration, and the National Aeronautics and Space Administration certify that this final rule will not have a significant economic impact on a substantial number of small entities within the meaning of the Regulatory Flexibility Act, 5 U.S.C. 601, *et seq.*, because all small businesses are exempt from CAS.

### C. Paperwork Reduction Act

The Paperwork Reduction Act does not apply because the changes to the FAR do not impose information collection requirements that require the approval of the Office of Management and Budget under 44 U.S.C. 3501, *et seq.*

### List of Subjects in 48 CFR Parts 30 and 52

Government procurement.

Dated: September 9, 2008.

**Al Matera,**

*Director, Office of Acquisition Policy.*

■ Therefore, DoD, GSA, and NASA amend 48 CFR parts 30 and 52 as set forth below:

■ 1. The authority citation for 48 CFR parts 30 and 52 continues to read as follows:

**Authority:** 40 U.S.C. 121(c); 10 U.S.C. chapter 137; and 42 U.S.C. 2473(c).

## PART 30—COST ACCOUNTING STANDARDS ADMINISTRATION

■ 2. Amend section 30.201–4 by revising paragraph (c) to read as follows:

**30.201–4 Contract clauses.**

* * * * *

(c) *Disclosure and Consistency of Cost Accounting Practices for Contracts Awarded to Foreign Concerns.* The contracting officer shall insert the clause at FAR 52.230–4, Disclosure and Consistency of Cost Accounting Practices for Contracts Awarded to Foreign Concerns, in negotiated contracts with foreign concerns, unless the contract is otherwise exempt from CAS (see 48 CFR 9903.201–1). Such contracts are subject to CAS 401 and 402 under 48 CFR 9903.201–1(b)(4)(FAR Appendix). Foreign concerns do not include foreign governments or their agents or instrumentalities.

* * * * *

## PART 52—SOLICITATION PROVISIONS AND CONTRACT CLAUSES

■ 3. Amend section 52.230–4 by revising the section heading, the clause heading and date, and the first, second, and fourth sentences of the clause to read as follows.

**52.230–4 Disclosure and Consistency of Cost Accounting Practices for Contracts Awarded to Foreign Concerns.**

* * * * *

DISCLOSURE AND CONSISTENCY OF COST ACCOUNTING PRACTICES FOR CONTRACTS AWARDED TO FOREIGN CONCERNS (OCT 2008).

The Contactor agrees that it will consistently follow the cost accounting practices disclosed on FORM CASB DS–1, or other disclosure form as permitted by 48 CFR 9903.202–1(e), in estimating, accumulating, and reporting costs under this contract, and comply with the requirements of CAS 401, Consistency in Estimating, Accumulating, and Reporting Costs, and CAS 402, Consistency in Allocating Costs Incurred for the Same Purpose. In the event the Contractor fails to follow such practices, or

comply consistently with CAS 401 and 402, it agrees that the contract price shall be adjusted, together with interest, if such failure results in increased cost paid by the U.S. Government. * * * The Contractor agrees that the Disclosure Statement or other form permitted, pursuant to 48 CFR 9903.202–1(e) shall be available for inspection and use by authorized representatives of the United States Government.

(End of clause)

[FR Doc. E8–21365 Filed 9–16–08; 8:45 am]

BILLING CODE 6820–EP–S

## DEPARTMENT OF DEFENSE

## GENERAL SERVICES ADMINISTRATION

## NATIONAL AERONAUTICS AND SPACE ADMINISTRATION

### 48 CFR Parts 37 and 52

**[FAC 2005–27; FAR Case 2006–027; Item XIII;Docket 2007–0001; Sequence 5]**

**RIN 9000–AK54**

## Federal Acquisition Regulation; FAR Case 2006–027, Accepting and Dispensing of $1 Coin

**AGENCIES:** Department of Defense (DoD), General Services Administration (GSA), and National Aeronautics and Space Administration (NASA).

**ACTION:** Final rule.

**SUMMARY:** The Civilian Agency Acquisition Council and the Defense Acquisition Regulations Council (Councils) have agreed to adopt as final, with change, the interim rule amending the Federal Acquisition Regulation (FAR) to implement Section 104 of the Presidential $1 Coin Act of 2005. Section 104 requires that entities that operate any business on any premises owned or controlled by the United States be capable of accepting and dispensing $1 coins on January 1, 2008. Subsequent to this, Pub. L. 110–147 amended 31 U.S.C. 5112(p)(1)(A), to allow an exception from the $1 coin dispensing capability requirement for vending machines that do not receive currency denominations greater than $1.

**DATES:** *Effective Date*: September 17, 2008.

*Applicability Date*: This rule applies to all service contracts that involve business operations conducted in U.S. coins and currency, including vending machines, on any premises owned by the United States or under the control of any agency or instrumentality of the United States. The clause shall be placed in all such solicitations and contracts on and after the effective date of this rule. Those applicable contracts in existence before January 1, 2008, that do not already have the clause shall be modified to include the clause; those contracts that have the August 2007 edition of the clause shall be modified if the contractor requests, to include the newer version contained in this FAC, without requiring consideration from the contractor.

**FOR FURTHER INFORMATION CONTACT:** Mr. Michael Jackson, Procurement Analyst, at (202) 208–4949 for clarification of content. For information pertaining to status or publication schedules, contact the FAR Secretariat at (202) 501–4755. Please cite FAC 2005–27, FAR case 2006–027.

**SUPPLEMENTARY INFORMATION:**

### A. Background

This final rule amends the FAR to implement the Presidential $1 Coin Act of 2005 (Pub. L. 109–145). The Presidential $1 Coin Act of 2005 requires the Secretary of the Treasury to mint and issue annually four new $1 coins bearing the likenesses of Presidents of the United States in the order of their service and to continue to mint and issue ''Sacagawea-design'' coins for circulation. In order to promote circulation of the coins, Section 104 of the Public Law also requires that Federal agencies take action so that, by January 1, 2008, entities that operate any business, including vending machines, on any premises owned by the United States or under the control of any agency or instrumentality of the United States, are capable of accepting and dispensing $1 coins and that the entities display notices of this capability on the business premises. Subsequent to the passage of the Presidential Coin Act, Pub. L. 110–147 amended 31 U.S.C. 5112(p)(1)(A), to allow an exception from the $1 coin dispensing capability requirement for vending machines that do not receive currency denominations greater than $1. This will require modification of existing covered contracts whose period of performance extends beyond the January 1, 2008 date in order to assure compliance with Section 104 of the Act, as well as compliance with Pub. L. 110–147.

DoD, GSA, and NASA published an interim rule in the **Federal Register** at 72 FR 46361, August 17, 2007. The 60–day comment period for the interim rule ended October 16, 2007. Three respondents provided comments. The comments are discussed below.

**Public Comments**

*Comment 1:* One respondent asked why does the FAR matrix show that 52.237–11 is applicable to R&D contracts and to A&E contracts?

R&D contracts and A&E contracts are usually paid by electronic funds transfer. There is usually no cash payment involved in such contracts. Therefore, why would contractors who provide R&D or A&E services have to be capable of accepting dollar coins?

*Response:* The inclusion of R&D and A&E contracts in the FAR matrix as applicable to 52.237–11 was an inadvertent error.

*Comment 2:* One respondent stated in order to implement these widespread and extensive changes to vending machines, our members simply need more time. Contrary to the statement contained in the **Federal Register** notice, this interim rule *does* have a significant economic impact. It is not accurate to state that ''receiving and dispensing the new coins as part of business operations should not add to workload or expense'' (72 FR 46361, August 17, 2007). Accordingly, we strongly encourage the Councils to account for both the workload and expense by extending the compliance date to July 1, 2008.

*Response:* Section 104 of the Presidential $1 Coin Act of 2005 (31 U.S.C. 5112(p)(1)), established the effective date for this provision to be January 1, 2008. The effect of this clause is merely to implement the provision of law. Notwithstanding, the provision of law cannot be modified under these circumstances without further consideration by Congress, who passed the provision of law. Pub. L. 110–147 amended section 5112(p)(1)(A) of title 31, U.S.C., to allow an exception from the $1 coin dispensing capability requirement for vending machines that do not receive currency denominations greater than $1. Thus, the exception of the law provides relief for those vending machines.

*Comment 3:* One respondent requested an amendment to the interim rule published in the **Federal Register**, August 17, 2007, amending 48 CFR 52 (Solicitation Provisions and Contract Clauses), Section 52.237–11 (Accepting and Dispensing of $1 Coin) to exempt vending machines on Federal property that do not accept currency denominations above $1 from the requirement to dispense dollar coins.

*Response:* The very intent of the statute is to require those businesses and instrumentalities operating on Federal property to be able to accept and dispense the $1 coin if that business or instrumentality is conducting a business whereby coins or currency is exchanged. However, Pub. L. 110–147 amended section 5112(p)(1)(A) of title

31, U.S.C., to allow an exception from the $1 coin dispensing capability requirement for vending machines that do not receive currency denominations greater than $1.

*Comment 4:* One commenter stated the key paragraph within Section 104, (p)(1) is Paragraph A. It states: ''any business operations conducted by any such agency, instrumentality, system, or entity that involve coins or currency will be fully capable of accepting and dispensing $1 coins in connection with such operations;''.

Commenter stated that they believe it is perfectly reasonable to read this paragraph to mean that a vending operation on Federal property in which every vending machine accepts dollar coins, every bill changer in the operation dispenses dollar coins, and every machine that accepts denominations above $1 dispenses dollar coins in change is in full compliance with this paragraph.

*Response:* Due to the amended language at Pub. L. 110–147, the commenter is correct.

*Comment 5:* One commenter stated we note that Paragraph (B) requires the display of signs and notices denoting $1 coin capability, ''including on each vending machine.'' Yet Paragraph (A), the key paragraph that imposes the general coin acceptance and dispensing obligation, lacks this individual vending machine requirement. Again, if Congress truly intended to require every vending machine to dispense dollar coins in change, it could easily have stated this in the key Paragraph, Paragraph A. It did not.

*Response:* See response to comment 3.

*Comment 6:* One commenter stated requiring vending machines that do not accept denominations higher than $1 to dispense dollar coins does not serve the purpose of Section 104 of the Presidential Dollar Coin Act of 2005. The purpose of Section 104 of the Act, requiring that dollar coins be available on all Federal property and that signs be posted denoting such availability, is to promote wider distribution and use of dollar coins in commerce. The Preamble to Pub. L. 109–145, enacted January 4, 2005, states that one of the purposes of the Law is ''to improve circulation of the $1 coin.'' Requiring machines that accept nothing higher than the $1 denomination to be modified to dispense dollar coins would not improve circulation of dollar coins. Instead, this requirement would involve needless expense.

*Response:* Congress did recognize that requiring vending machines that did not receive denominations greater than $1 coins, but programmed to dispense $1 coins would impair the public's ability to circulate $1 coins. Thus, Pub. L. 110–147 amended section 5112(p)(1)(A) of title 31, U.S.C., to allow an exception from the $1 coin dispensing capability requirement for vending machines that do not receive currency denominations greater than $1.

In reviewing the interim FAR language, the reference to ''higher than $1'' in FAR Clauses 37.116–1 Presidential $1 Coin Act of 2005 (new inserted text) and 52.237–11 ''Accepting and Dispensing $1 Coin'' paragraph ''b'', be modified to change the wording ''…higher than $1…'' to read as ''…greater than $1…'' since this is more consistent with the reference to a currency denomination.

This is not a significant regulatory action and, therefore, was not subject to review under Section 6(b) of Executive Order 12866, Regulatory Planning and Review, dated September 30, 1993. This rule is not a major rule under 5 U.S.C. 804.

**B. Regulatory Flexibility Act**

The Department of Defense, the General Services Administration, and the National Aeronautics and Space Administration certify that this final rule will not have a significant economic impact on a substantial number of small entities within the meaning of the Regulatory Flexibility Act, 5 U.S.C. 601, *et seq.*, because accepting $1 coins as part of business operations should not add to workload or expense. While it is relatively easy for beverage and other vending machines to accept $1 coins, configuring the machines to dispense the $1 coin as change is much more difficult. For several years, most vending machines have been fully capable of accepting the $1 coin. However, due to the vending price of beverages, machines usually have no reason to dispense $1 coins as change during a normal transaction, and therefore, are not currently set up for this transaction. In order to dispense a $1 coin, each machine would need to be individually serviced and retrofitted. In the case of coin mechanisms manufactured before the year 2000, these mechanisms will have to be replaced. The cost of a new mechanism is approximately $300 - $400. In the case of mechanisms manufactured after the year 2000, a new coin cassette will cost from $20 - $40. However, due to Congress amending the statute and making the $1 coin dispensing requirement only apply to those machines that receive currency denominations greater than $1, this eases the burden on industry.

The National Automatic Merchandising Association (NAMA) is the agent that took the lead in causing the amendment to the original statute. The December 2007 amendment made an exception to the rule and added that vending machines that did not receive denominations over $1 were released from the requirement of dispensing the $1 coin. NAMA informed that most of their members are small businesses. NAMA is of the belief that the December 2007 amendment to exempt vending machines that do not take greater than $1 from the dispensing requirement will protect most small businesses. For those machines that take denominations greater than $1, these machines are relatively new and already accept the $1 coin and would have to be refitted with dispensers that would cost about $40. For those older machines that take denominations above $1, these machines will require new parts at a cost of about $400.00. NAMA is of the belief that most of the machines that take denominations greater than $1 are of the newer variety and therefore can be brought into compliance with the dispensing $1 coin requirement at an expense of $40. For vending machines already configured to accept and dispense the Sacagawea-design $1 coin, which has been in circulation since January 2000, there will be no need to change or modify equipment. Contracting officers have been instructed in the Applicability Date of the preamble to modify contracts upon request of the contractor, to change the older version of the clause to the newer version without requiring consideration from the contractor.

**C. Paperwork Reduction Act**

The Paperwork Reduction Act does not apply because the changes to the FAR do not impose information collection requirements that require the approval of the Office of Management and Budget under 44 U.S.C. 3501, *et seq.*

**List of Subjects in 48 CFR Parts 37 and 52**

Government procurement.

Dated: September 9, 2008

**Al Matera,**

*Director, Office of Acquisition Policy.*

■ Accordingly, the interim rule amending 48 CFR parts 37 and 52 which was published in the **Federal Register** at 72 FR 46361, August 17, 2007, is adopted as a final rule with the following changes:

■ 1. The authority citation for 48 CFR parts 37 and 52 continues to read as follows:

**Authority:** 40 U.S.C. 121(c); 10 U.S.C. chapter 137; and 42 U.S.C. 2473(c).

## PART 37—SERVICE CONTRACTING

■ 2. Amend section 37.116–1 by removing from the second sentence the words ''United States''; and adding a sentence to the end of the paragraph to read as follows:

**37.116–1 Presidential $1 Coin Act of 2005.**

* * * Pub. L. 110–147 amended 31 U.S.C. 5112(p)(1)(A) to allow an exception from the $1 coin dispensing capability requirement for those vending machines that do not receive currency denominations greater than $1.

## PART 52—SOLICITATION PROVISIONS AND CONTRACT CLAUSES

■ 3. Amend section 52.212–5 by revising the date of the clause and paragraph (c)(7) to read as follows:

**52.212–5 Contract Terms and Conditions Required to Implement Statutes or Executive Orders—Commercial Items.**

* * * * *

CONTRACT TERMS AND CONDITIONS REQUIRED TO IMPLEMENT STATUTES OR EXECUTIVE ORDERS—COMMERCIAL ITEMS (SEP 2008).

* * * * *

(c) * * *

(7) 52.237–11, Accepting and Dispensing of $1 Coin (SEP 2008) (31 U.S.C. 5112(p)(1)).

* * * * *

■ 4. Amend section 52.237–11 by revising the date of the clause and paragraph (b) to read as follows:

**52.237–11 Accepting and Dispensing of $1 Coin.**

* * * * *

ACCEPTING AND DISPENSING OF $1 COIN (SEP 2008)

* * * * *

(b) All business operations conducted under this contract that involve coins or currency, including vending machines, shall be fully capable of—

(1) Accepting $1 coins in connection with such operations; and

(2) Dispensing $1 coins in connection with such operations, unless the vending machine does not receive currency denominations greater than $1.

* * * * *

(End of clause)

[FR Doc. E8–21369 Filed 9–16–08; 8:45 am]

BILLING CODE 6820–EP–S

## DEPARTMENT OF DEFENSE

## GENERAL SERVICES ADMINISTRATION

## NATIONAL AERONAUTICS AND SPACE ADMINISTRATION

## 48 CFR Parts 15 and 52

**[FAC 2005–27; Item XIV;Docket FAR–2008–0007; Sequence 1]**

## Federal Acquisition Regulation; Technical Amendment

**AGENCIES:** Department of Defense (DoD), General Services Administration (GSA), and National Aeronautics and Space Administration (NASA).

**ACTION:** Final rule.

**SUMMARY:** This document makes amendments to the Federal Acquisition Regulation in order to make editorial changes.

**DATES:** *Effective Date*: September 17, 2008.

**FOR FURTHER INFORMATION CONTACT:** The FAR Secretariat, Room 4041, GS Building, Washington, DC, 20405, (202) 501–4755, for information pertaining to status or publication schedules. Please cite FAC 2005–27, Technical Amendment.

### List of Subjects in 48 CFR Parts 15 and 52

Government procurement.

Dated: September 9, 2008

**Al Matera,**

*Director, Office of Acquisition Policy.*

■ Therefore, DoD, GSA, and NASA amend 48 CFR parts 15 and 52 as set forth below:

■ 1. The authority citation for 48 CFR parts 15 and 52 continues to read as follows:

**Authority:** 40 U.S.C. 121(c); 10 U.S.C. chapter 137; and 42 U.S.C. 2473(c).

## PART 15—CONTRACTING BY NEGOTIATION

**15.404–1 [Amended]**

■ 2. Amend section 15.404–1 by removing from paragraph (a)(7) ''*http://www.acq.osd.mil/dpap/contractpricing/index.htm*'' and adding ''*http://www.acq.osd.mil/dpap/cpf/contract__pricing__reference__guides.html* ''in its place.

## PART 52—SOLICITATION PROVISIONS AND CONTRACT CLAUSES

**52.212–5 [Amended]**

■ 3. Amend section 52.212–5 by removing from paragraph (b)(26) the word ''FAR''.

[FR Doc. E8–21368 Filed 9–16–08; 8:45 am]

BILLING CODE 6820–EP–S

## DEPARTMENT OF DEFENSE

## GENERAL SERVICES ADMINISTRATION

## NATIONAL AERONAUTICS AND SPACE ADMINISTRATION

## 48 CFR Chapter 1

**[Docket FAR 2008–0003, Sequence 2]**

## Federal Acquisition Regulation; Federal Acquisition Circular 2005–27; Small Entity Compliance Guide

**AGENCIES:** Department of Defense (DoD), General Services Administration (GSA), and National Aeronautics and Space Administration (NASA).

**ACTION:** Small Entity Compliance Guide.

**SUMMARY:** This document is issued under the joint authority of the Secretary of Defense, the Administrator of General Services and the Administrator of the National Aeronautics and Space Administration. This Small Entity Compliance Guide has been prepared in accordance with Section 212 of the Small Business Regulatory Enforcement Fairness Act of 1996. It consists of a summary of rules appearing in Federal Acquisition Circular (FAC) 2005–27 which amend the FAR. An asterisk (*) next to a rule indicates that a regulatory flexibility analysis has been prepared. Interested parties may obtain further information regarding these rules by referring to FAC 2005–27 which precedes this document. These documents are also available via the Internet at *http://www.regulations.gov*.

**FOR FURTHER INFORMATION CONTACT:** Laurieann Duarte, Regulatory Secretariat, (202) 501–4225. For clarification of content, contact the analyst whose name appears in the table below.

LIST OF RULES IN FAC 2005–27

| Item | Subject | FAR case | Analyst |
|---|---|---|---|
| I ..... | Correcting Statutory References Related to theHigher Education Act of 1965 ..... | 2007–020 | Cundiff. |

LIST OF RULES IN FAC 2005–27—Continued

| Item | Subject | FAR case | Analyst |
|---|---|---|---|
| II | Changing the Name of the Office of Small andDisadvantaged Business Utilization for DoD | 2008–001 | Cundiff. |
| III | Administrative Changes to the FPI Blanket Waiver and the JWOD Program Name | 2007–015 | Clark. |
| IV | Local Community Recovery Act of 2006 | 2006–014 | Clark. |
| V | Additional Requirements for Competition Advocate AnnualReports | 2007–007 | Woodson. |
| VI | Contract Debts | 2005–018 | Murphy. |
| VII | Subcontractor Requests for Bonds | 2007–022 | Jackson. |
| VIII | Extension of Authority for Use of Simplified Acquisition Procedures for Certain Commercial Items. | 2008–002 | Jackson. |
| IX | Enhanced Competition for Task and Delivery OrderContracts—Section 843 of the Fiscal Year 2008 National Defense Authorization Act(Interim). | 2008–006 | Clark. |
| X | Online Representations and Certifications ApplicationReview | 2006–025 | Woodson. |
| XI | Cost Accounting Standards (CAS) Administration andAssociated Federal Acquisition Regulation Clauses (Interim). | 2007–002 | Chambers. |
| XII | CAS Administration | 2006–004 | Chambers. |
| XIII | Accepting and Dispensing of $1 Coin | 2006–027 | Jackson. |
| XIV | Technical Amendments | | |

**SUPPLEMENTARY INFORMATION:** Summaries for each FAR rule follow. For the actual revisions and/or amendments to these FAR cases, refer to the specific item number and subject set forth in the documents following these item summaries.

**FAC 2005–27 amends the FAR as specified below:**

**Item I—Correcting Statutory References Related to the Higher Education Act of 1965 (FAR Case 2007–020)**

This final rule amends the Federal Acquisition Regulation to reflect the correct public law citations for the definitions of minority institution and Hispanic-serving institution. The citations changed when the Higher Education Act of 1965 was amended by the Higher Education Amendments of 1998.

**Item II—Changing the Name of the Office of Small and Disadvantaged Business Utilization for DoD (FAR Case 2008–001)**

This final rule amends the Federal Acquisition Regulation to change the name of the ''Office of Small and Disadvantaged Business Utilization'' to the ''Office of Small Business Programs'' for the Department of Defense. Section 904 of the National Defense Authorization Act for Fiscal Year 2006, Pub. L. 109–163, re-designated the ''Office of Small and Disadvantaged Business Utilization''.

**Item III—Administrative Changes to the FPI Blanket Waiver and the JWOD Program Name (FAR Case 2007–015)**

This final rule amends the language in the Federal Acquisition Regulation to increase the blanket waiver threshold for small dollar-value purchases from Federal Prison Industries by Federal agencies and also changes the name of the JWOD Program to the AbilityOne Program. These changes are administrative in nature and any impact will be minimal.

**Item IV—Local Community Recovery Act of 2006 (FAR Case 2006–014)**

The Civilian Agency Acquisition Council and the Defense Acquisition Regulations Council have adopted as final, with a minor change to the second interim rule, two interim rules amending the Federal Acquisition Regulation (FAR) to implement amendments to the Robert T. Stafford Disaster Relief and Emergency Assistance Act. The first interim rule was published in the **Federal Register** at 71 FR 44546, August 4, 2006. The second interim rule was published in the **Federal Register** at 72 FR 63084, November 7, 2007.

**Item V—Additional Requirements for Competition Advocate Annual Reports (FAR Case 2007–007)**

This final rule amends the Federal Acquisition Regulation 6.502 to require that annual reviews by executive agency competition advocates be provided in writing to both the agency senior procurement executive and the agency chief acquisition officer, and ensure task and delivery orders over $1,000,000 issued under multiple award contracts are properly planned, issued, and comply with 8.405 and 16.505. The rule provides for one of several initiatives by the Administrator, Office of Federal Procurement Policy, to reinforce the use of competition and related practices for achieving a competitive environment. The rule reinvigorates the role of agencies' competition advocates, strengthens agencies' competition practices, and ensures best value for the taxpayer.

**Item VI—Contract Debts (FAR Case 2005–018)**

This final rule amends and reorganizes FAR Subpart 32.6, Contract Debts, and amends associated other FAR coverage, based on the recommendations of the Department of Defense Contract Debt Integrated Process Team, to improve contract debt controls and procedures and to ensure consistency within and between existing regulations. FAR Subpart 32.6 prescribes policies and procedures for identifying, collecting, and deferring collection of contract debts (including interest, if applicable). Throughout, the term ''responsible official'' has been replaced with the specific individual/organization responsible for fulfilling the FAR requirement. FAR 32.601 is revised to specify what constitutes a contract debt, rather than how a contract debt may arise. All discussions of contract debt determinations are consolidated in FAR 32.603, including the responsibility of the contracting officer in making debt determinations. All discussions of the demand for payment are consolidated in FAR 32.604, including the requirements for demand letters. All discussions of final decisions are consolidated in FAR 32.605. FAR 32.606 includes all coverage on debt collections, including when responsibility should be transferred to the Department of Treasury. All discussions of interest are consolidated at FAR 32.608, including how to compute interest. The Government's right to make a demand for payment and start the interest clock running under the contract is ensured, as is the Government's right to make a demand for payment without first issuing a final decision of the contracting officer. A final decision is

required only if the contractor disagrees with the demand for payment.

**Item VII—Subcontractor Requests for Bonds (FAR Case 2007–022)**

This final rule amends the list of laws inapplicable to commercial items, to clarify that the existing regulations at FAR 28.106–4, Contract clause, and 52.228–12, Prospective Subcontractor Requests for Bonds, do not apply to commercial items. Section 806(a)(3) of Pub. L. 102–190, as amended by Sections 2091 and 8105 of Pub. L. 103–355 will be included in the list at FAR 12.503(a) and 12.504(a).

**Item VIII—Extension of Authority for Use of Simplified Acquisition Procedures for Certain Commercial Items (FAR Case 2008–002)**

This final rule amends the Federal Acquisition Regulation to implement Section 822 of the National Defense Authorization Act for Fiscal Year 2008 (Pub. L. 110–181). Section 822 amends Section 4202(e) of the Clinger-Cohen Act of 1996 (division D of Pub. L. 104–106; 110 Stat. 652; 10 U.S.C. 2304 note) by extending until January 1, 2010, the timeframe in which an agency may use simplified procedures to purchase commercial items in amounts greater than the simplified acquisition threshold, but not exceeding $5,500,000 ($11 million for acquisitions as described in 13.500(e)).

**Item IX—Enhanced Competition for Task and Delivery Order Contracts—Section 843 of the Fiscal Year 2008 National Defense Authorization Act (FAR Case 2008–006) (Interim)**

This interim rule amends Federal Acquisition Regulation Subpart 16.5 to implement Section 843 of the Fiscal Year 2008 National Defense Authorization Act (Pub. L. 110–181). The provisions of Section 843 include: (1) Limitation on single award task or delivery order (Indefinite-Delivery Requirements, and Indefinite-Quantity) type contracts greater than $100 million; (2) Enhanced competition for task and delivery orders in excess of $5 million; and (3) Protest on orders on the grounds that the order increases the scope, period, maximum value of the contract under which the order is issued; or valued in excess of $10 million. FAR sections 16.503 and 16.504, as amended by this rule, are applicable to single award task or delivery order contracts awarded on or after May 27, 2008. FAR section 16.505, as amended by this rule, is applicable to orders awarded on or after May 27, 2008 on existing contracts as well as new contracts.

**Item X—Online Representations and Certifications Application Review (FAR Case 2006–025)**

This final rule adopts as final, without change, the interim rule published in the **Federal Register** at 72 FR 46359, August 17, 2007. The rule amends FAR 23.406 and 23.906 to revise the prescriptions for the use of 52.223–9 and 52.223–14 to provide for their use under the same circumstances as the prescription for use of their associated provisions. These revisions ensure compliance with the requirements of 40 CFR part 247 and 42 U.S.C. 11023.

**Item XI—Cost Accounting Standards (CAS) Administration and Associated Federal Acquisition Regulation Clauses (FAR Case 2007–002) (Interim)**

The subject case is revising the Federal Acquisition Regulation (FAR) clauses concerning the administration of Cost Accounting Standards (CAS) to maintain consistency between the CAS rules and the FAR.

**Item XII—CAS Administration (FAR Case 2006–004)**

This final rule adopts, with minor changes, the proposed rule published in the **Federal Register** at 71 FR 58338, October 3, 2006, amending the Federal Acquisition Regulation to implement revisions to the regulations related to the administration of the Cost Accounting Standards as they pertain to contracts with foreign concerns, including United Kingdom concerns.

**Item XIII—Accepting and Dispensing of $1 Coin (FAR Case 2006–027)**

This final rule adopts, with change, the interim rule published in the **Federal Register** at 72 FR 46361, August 17, 2007. This final rule implements the Presidential $1 Coin Act of 2005 (Pub. L. 109–145). The Presidential $1 Coin Act of 2005 requires the Secretary of the Treasury to mint and issue annually four new $1 coins bearing the likenesses of the Presidents of the United States in the order of their service and to continue to mint and issue ''Sacagawea-design'' coins for circulation. In order to promote circulation of the coins, Section 104 of the Public Law also requires that Federal agencies take action so that, by January 1, 2008, entities that operate any business, including vending machines, on any premises owned by the United States or under the control of any agency or instrumentality of the United States, are capable of accepting and dispensing $1 coins and that the entities display notices of this capability on the business premises. Pub. L. 110–147 was enacted to amend Section 5112(p)(1)(A) of Title 31, United States Code, to allow an exception from the $1 coin dispensing capability requirement for those vending machines that do not receive currency denominations greater than $1. Contracting officers have been instructed in the Applicability Date of the preamble to modify contracts upon request of the contractor, to change the older version of the clause to the newer version without requiring consideration from the contractor.

**Item XIV—Technical Amendments**

Editorial changes are made at FAR 15.404–1 and 52.212–5.

Dated: September 9, 2008

**Al Matera,**

*Director, Office of Acquisition Policy.*

[FR Doc. E8–21370 Filed 9–16–08; 8:45 am]

BILLING CODE 6820–EP–S

Federal Register

Wednesday,
September 17, 2008

# Part IV

# Department of Transportation

## National Highway Traffic Safety Administration

## 49 CFR Part 571

## Federal Motor Vehicle Safety Standards; Motorcycle Brake Systems; Proposed Rule

**DEPARTMENT OF TRANSPORTATION**

**National Highway Traffic Safety Administration**

**49 CFR Part 571**

**[Docket No. NHTSA–2008–0150]**

**RIN 2127–AK16**

## Federal Motor Vehicle Safety Standards; Motorcycle Brake Systems

**AGENCY:** National Highway Traffic Safety Administration, Department of Transportation (NHTSA).

**ACTION:** Notice of proposed rulemaking (NPRM).

**SUMMARY:** We are proposing to amend the Federal motor vehicle safety standard on motorcycle brake systems, in order to add and update requirements and test procedures and to harmonize with a global technical regulation for motorcycle brakes. If adopted, today's proposal would specify an additional dry brake test procedure to test each service brake control individually and with the motorcycle in the fully loaded condition, provide a new test procedure for assessing performance of motorcycle brakes from high speeds, provide a new wet brake test that better simulates in-service conditions, provide an improved test procedure for evaluating heat fade, add test procedures and performance requirements for antilock brake systems, if fitted, and add a power-assisted braking system failure test, if equipped.

**DATES:** *Comment closing date:* You should submit your comments early enough to ensure that Document Management receives them not later than November 17, 2008.

**ADDRESSES:** You may submit comments, identified by the docket number in the heading of this document, by any of the following methods:

- *Federal eRulemaking Portal:* Go to *http://www.regulations.gov*. Follow the online instructions for submitting comments.
- *Mail:* Docket Management Facility, U.S. Department of Transportation, 1200 New Jersey Avenue, SE., West Building Ground Floor, Room W12–140, Washington, DC 20590–0001.
- *Hand Delivery:* 1200 New Jersey Avenue, SE., West Building Ground Floor, Room W12–140, between 9 a.m. and 5 p.m. ET, Monday through Friday, except Federal holidays.
- *Fax:* 202–493–2251.

*Instructions:* All submissions must include the agency name and docket number or Regulatory Identification Number (RIN) for this rulemaking. Note that all comments received will be posted without change to *http://www.regulations.gov*, including any personal information provided. Please see the discussion of the Privacy Act below. For detailed instructions on submitting comments and additional information on the rulemaking process, see the Public Participation heading of the Supplementary Information section of this document.

*Privacy Act:* Anyone is able to search the electronic form of all comments received into any of our dockets by the name of the individual submitting the comment (or signing the comment, if submitted on behalf of an association, business, labor union, etc.). You may review DOT's complete Privacy Act Statement in the **Federal Register** published on April 11, 2000 (65 FR 19477–78) or you may visit *http://DocketInfo.dot.gov*.

*Docket:* For access to the docket to read background documents or comments received, go to *http://www.regulations.gov*, or the street address listed above. Follow the online instructions for accessing the dockets.

**FOR FURTHER INFORMATION CONTACT:**

*For technical issues:* Mr. George Soodoo, Division Chief, Vehicle Dynamics (NVS–122), Office of Crash Avoidance Standards (E-mail: *george.soodoo@dot.gov*) (Telephone: (202) 366–2720) (Fax: (202) 366–5930) or Mr. Ezana Wondimneh, Division Chief, International Policy and Harmonization (NVS–133), Office of International Policy, Fuel Economy and Consumer Programs (E-mail: *ezana.wondimneh@dot.gov*) (Telephone: (202) 366–0846) (Fax: (202) 493–2290).

*For legal issues:* Ms. Sarah Alves, Office of the Chief Counsel (NCC–112) (E-mail: *sarah.alves@dot.gov*) (Telephone: (202) 366–2992) (Fax: (202) 366–3820).

You may send mail to these officials at National Highway Traffic Safety Administration, 1200 New Jersey Avenue, SE., Washington, DC 20590.

**SUPPLEMENTARY INFORMATION:**

**Table of Contents**

I. Executive Summary
II. Background
III. Current Requirements of FMVSS No. 122
IV. Harmonization Efforts
V. Proposed Improvements to FMVSS No. 122
A. General
1. New Terminology
a. Motorcycle Categories
b. Measurement of Deceleration and Stopping Distance
2. Motorcycle Test Speed and Corrected Stopping Distance
3. Test Method To Measure Peak Braking Coefficient
4. Test Sequence
5. Brake Application Force Measurement
6. Brake Temperature Measurement
7. Burnishing Procedure
8. Notice of Wear
B. Specific Performance Tests
1. Dry Stop Test—Single Brake Control Actuated
2. Dry Stop Test—All Service Brake Controls Actuated
3. High-Speed Test
4. Wet Brake Test
5. Heat Fade Test
6. Parking Brake System Test
7. Antilock Brake System (ABS) Performance Test
a. ABS Performance Test—Stopping Performance Requirement
b. ABS Performance Test—Low-Friction to High-Friction Surface Transition Stop
8. Partial Failure Test—Split Service Brake System
9. Power-Assisted Braking System Failure Test
C. Summary of Improvements
VI. Costs, Benefits, and the Proposed Compliance Date
VII. Differences Between the GTR and the NPRM
VIII. Regulatory Analyses and Notices
IX. Public Participation

### I. Executive Summary

Currently, motorcycle brake systems must comply with a series of performance requirements established in Federal Motor Vehicle Safety Standard (FMVSS) No. 122, *Motorcycle Brake Systems*, in the early 1970s. While the motorcycle brake performance requirements have ensured a minimum level of braking performance, they have not kept pace with the advancement of modern technologies. The National Highway Traffic Safety Administration (NHTSA) seeks to keep its standards up to date. This document proposes to update FMVSS No. 122 based on the Motorcycle Brake Systems Global Technical Regulation (GTR), which reflects the capabilities of current technologies. Updating the standard to reflect modern technologies would help prevent the introduction of unsafe motorcycle brake systems on the road. Moreover, benefits from harmonization including decreased testing costs and ease of market entry would accrue to current and new manufacturers, and would in turn get passed on to consumers. While there is not necessarily any quantifiable safety benefit for this proposal since virtually all motorcycles sold in the U.S. can currently meet the proposed requirements, the agency is planning on taking several other actions to decrease motorcycle fatalities.[1]

[1] *See* U.S. Department of Transportation, ''Action Plan to Reduce Motorcycle Fatalities,'' at 8 (October

The substantive performance tests and requirements of FMVSS No. 122 have not been updated since their adoption in 1972. Since that time, motorcycle brake system technology has significantly changed and improved such that FMVSS No. 122 no longer reflects the current performance of motorcycle brake system technologies. In order to address modern braking technologies, the agency sought to improve the requirements and test procedures of FMVSS No. 122. These efforts coincided with the 2002 adoption of the initial Program of Work under the 1998 United Nations' Economic Commission for Europe (UNECE) Agreement Concerning the Establishment of Global and Technical Regulations for Wheeled Vehicles, Equipment and Parts Which Can Be Fitted And/or Be Used On Wheeled Vehicles (1998 Agreement).[2] That program included motorcycle brake systems as one of the promising areas for the establishment of a GTR. The agency sought to work collaboratively on modernizing motorcycle brake regulations with other Contracting Parties to the 1998 Agreement (Contracting Parties), particularly Canada, the European Union and Japan. Through the exchange of information on ongoing research and testing and through the leveraging of resources for testing and evaluations, the agency participated in successful efforts that culminated in the establishment of the Motorcycle Brake Systems GTR under the 1998 Agreement. We believe that the provisions of the GTR would improve the current requirements and test procedures of FMVSS No. 122 by updating them to more closely reflect the capabilities of modern technologies.

The U.S., as a Contracting Party of the 1998 Agreement that voted in favor of establishing this GTR at the November 15, 2006 Session of the Executive Committee of the 1998 Agreement, is obligated under the Agreement to initiate the process for adopting the provisions of the GTR.[3] This proposal is based on the Motorcycle Brake Systems GTR. If NHTSA decides to adopt amendments to FMVSS No. 122 that differ from the requirements of the GTR, the agency will first seek to amend the GTR by submitting a formal proposal to the Executive Committee of the 1998 Agreement, in accordance with the Agreement.

This proposal, if made final, would improve the current FMVSS No. 122 requirements in several areas. First, it would make the dry brake test requirement more stringent by specifying testing of each service brake control individually, with the motorcycle in the fully loaded condition. Second, the proposal would establish a more stringent high speed test requirement by specifying a slightly higher rate of deceleration. Third, the proposal would replace the existing wet brake test with one that better simulates actual in-service conditions, by spraying water onto the brake disc, instead of submerging the brake system before testing. Fourth, the proposal would specify an improved heat fade test procedure based on European and Japanese national regulations, which share the same test procedure and performance requirements. Fifth, the proposal would specify performance requirements for antilock brake systems, if present. Finally, the proposal would establish a new test requirement to evaluate the motorcycle's performance in the event of a failure in the power-assisted braking system, if so equipped.

Besides updating requirements and test procedures to help ensure the safety of motorcycle brake systems, the proposal also provides benefits from harmonization. Motorcycle manufacturers, and ultimately, consumers, both here and abroad, can expect to achieve cost savings through the formal harmonization of differing sets of standards when the Contracting Parties implement the new GTR. Motorcycles are vehicles that are prepared for the world market. It would be more economically efficient to have manufacturers using the same test procedures and meeting the same performance requirements worldwide. This proposal would help achieve these benefits and thus reduce the amount of resources utilized to test motorcycles. Moreover, this GTR sets the stage for further cooperative efforts with other countries facing similar problems at the same or even greater exposure rates, learning from their experience, and leveraging resources to jointly research and implement more effective vehicle related interventions.[4]

Although this proposal would add and update FMVSS No. 122 performance requirements and provide benefits from harmonization, we anticipate that virtually all motorcycles sold in the U.S. can meet the requirements as proposed. The proposal includes several tests that would enhance the safe operation of a motorcycle: tests both at gross vehicle weight rating (GVWR) and lightly loaded vehicle weight, which ensure adequate braking performance at the two extremes of the loading conditions; a wet brake test that is more representative of the manner in which brakes are wetted during real world riding in wet conditions; a variety of ABS performance tests to ensure that motorcycles equipped with ABS have adequate antilock performance during emergency braking or on slippery road conditions; and a new requirement that addresses failure in the power-assisted braking system.

Given the sources and magnitude of the overall safety problem posed by increased motorcycle fatalities, the agency intends to address the problem of motorcycle safety comprehensively, focusing on regulatory as well as behavioral countermeasure strategies. In October 2007, the Secretary of Transportation announced the Action Plan to Reduce Motorcycle Fatalities which will help reduce motorcycle fatalities with new national safety and training standards, curb the use of counterfeit helmet labelling, place a new focus on motorcycle-specific road improvements, provide training for law enforcement officers on how to spot unsafe motorcyclists, and create a broad public awareness campaign on rider safety. *Id.* at 1.

## II. Background

FMVSS No. 122, *Motorcycle brake systems*, (49 CFR 571.122) took effect on January 1, 1974 (37 FR 1973, June 16, 1972). FMVSS No. 122 specifies performance requirements for motorcycle brake systems. The purpose of the standard is to provide safe motorcycle brake performance under normal and emergency conditions. The safety afforded by a motorcycle's braking system is determined by several factors, including stopping distance,

2007), *available at http://www.nhtsa.gov/motorcycles/index.cfm* (hereinafter ''Action Plan to Reduce Motorcycle Fatalities''); National Highway Traffic Safety Administration (NHTSA), ''2006 Motorcycle Safety Program Plan,'' at 26 (2006), *available at http://www.nhtsa.gov/portal/site/nhtsa/menuitem.d7975d55e8abbe089ca8e410dba046a0/* (hereinafter ''2006 Motorcycle Safety Program Plan'').

[2] The 1998 UNECE Agreement Concerning the Establishment of Global and Technical Regulations for Wheeled Vehicles, Equipment and Parts Which Can Be Fitted And/or Be Used On Wheeled Vehicles (1998 Agreement) was concluded under the auspices of the United Nations and provides for the establishment of globally harmonized vehicle regulations. This 1998 Agreement, whose conclusion was spearheaded by the United States, entered into force in 2000 and is administered by the UNECE's World Forum for the Harmonization of Vehicle Regulations (WP.29). *See http://www.unece.org/trans/main/wp29/wp29wgs/wp29gen/wp29age.html.*

[3] While the 1998 Agreement obligates such Contracting Parties to initiate rulemaking within one year of the establishment of the GTR, it leaves the ultimate decision of whether to adopt the GTR into their domestic law to the parties themselves.

[4] ''Action Plan to Reduce Motorcycle Fatalities,'' *supra* note 1, at 8.

linear stability while stopping, fade resistance, and fade recovery. A safe system should have features that both guard against malfunction and stop the motorcycle if a malfunction should occur in the normal service system. FMVSS No. 122 was originally conceived to cover each of these aspects of brake safety by specifying equipment and performance requirements appropriate for both two-wheeled and three-wheeled motorcycles. Because motorcycles differ significantly in configuration from other motor vehicles, the agency established a separate brake standard applicable only to this vehicle category. Many of the FMVSS No. 122 test procedures are, however, similar to those for passenger cars.[5]

Only a few changes have been made to the regulation since it was established. In response to petitions, a 1974 final rule changed the application of FMVSS No. 122 requirements for low-speed motor-driven cycles (motorcycles with 5-brake horsepower or less whose speed attainable in one mile is 30 miles per hour or less) (39 FR 32914, Sept. 12, 1974). In 1978, NHTSA amended the FMVSS No. 122 parking brake test to clarify the test conditions and incorporate an interpretation applicable to three-wheeled motorcycles (43 FR 46547, Oct. 10, 1978). In 2001, the minimum hand lever force requirements for the heat fade test and water recovery test were decreased to facilitate the manufacture of motorcycles with combined braking systems (66 FR 42613, Aug. 14, 2001). Except for the above changes, FMVSS No. 122 has not been amended to keep pace with the advancement of modern brake technologies.

## III. Current Requirements of FMVSS No. 122

FMVSS No. 122 applies to both two-wheeled and three-wheeled motorcycles. Among other requirements, the motorcycle manufacturer must ensure that each motorcycle can meet performance requirements under conditions specified in paragraph S6, *Test conditions*, and as specified in paragraph S7, *Test procedures*. The tests in S7 include pre- and post-burnishment effectiveness tests, a fade and recovery test, a partial failure test, a water recovery test, and parking brake test. At the end of the test procedure sequence, the brake system must pass a durability inspection. All stops must be made without lockup of any wheel.

*Equipment.* Each motorcycle is required to have either a split service brake system or two independently actuated brake systems. The former system encompasses a service brake system combined with a hand operated parking brake system for three-wheeled motorcycles. If a motorcycle has a hydraulic service brake system, it must also have a reservoir for each master cylinder, and a master cylinder reservoir label advising the proper grade of brake fluid. If the service brake system is a split hydraulic type, a failure indicator lamp is required. Additionally, three-wheeled motorcycles must be equipped with a friction type parking brake with a solely mechanical means to retain engagement. The service brake system must be installed so that the lining thickness of the drum brake shoes may be visually inspected, either directly or by using a mirror without removing the drums, and so that disc brake friction lining thickness may be visually inspected without removing the pads.

*Pre- and post-burnish tests.* The service brake system and each independently actuated service brake system on each motorcycle must be capable of stopping within specified distances from 30 miles per hour (mph) and 60 mph. The brakes are then burnished by making 200 stops from 30 mph at 12 feet per second per second ($fps^2$). The service brake system must then be capable of stopping at specified distances from 80 mph and from a speed divisible by 5 mph that is 4 mph to 8 mph less than the maximum motorcycle speed. The post-burnish tests are conducted in the same way as the pre-burnish stops, and the service brakes must be capable of stopping the motorcycle within the post-burnish specified stopping distances.

*Fade and recovery test.* The fade and recovery test compares the braking performance of the motorcycle before and after ten 60-mph stops at a deceleration of not less than 15 $fps^2$. As a check test, three baseline stops[6] are conducted from 30 mph at 10 to 11 $fps^2$, with the maximum brake lever and maximum pedal forces recorded during each stop, and averaged over the three baseline stops. Ten 60-mph stops are then conducted at a deceleration rate of not less than 15 $fps^2$, followed immediately by five fade recovery stops from 30 mph at a deceleration rate of 10 to 11 $fps^2$. The maximum brake pedal and lever forces measured during the fifth recovery stop must be within plus 20 pounds and minus 10 pounds of the baseline average maximum brake pedal and lever forces.

*Partial failure test.* In the event of a pressure component leakage failure, the remaining portion of the service brake system must continue to operate and shall be capable of stopping the motorcycle from 30 mph and 60 mph within specified stopping distances. The brake failure indicator light must activate when the master cylinder fluid level decreases below the minimum specified level.

*Water recovery test.* The water recovery test compares the braking performance of the motorcycle before and after the motorcycle brakes are immersed in water for two minutes. Three baseline stops are conducted from 30 mph at 10 to 11 $fps^2$, with the maximum brake lever and pedal forces recorded during each stop, and averaged over the three baseline stops. The motorcycle brakes are then immersed in water for two minutes, followed immediately by five water recovery stops from 30 mph at a deceleration rate of 10 to 11 $fps^2$. The maximum brake pedal and lever forces measured during the fifth recovery stop must be within plus 20 pounds and minus 10 pounds of the baseline average maximum brake pedal force and the lever force.

*Parking brake test.* For motorcycles required to be equipped with a parking brake system, such system must be able to hold the motorcycle on a 30 percent grade, in both forward and reverse directions, for 5 minutes. A parking brake indicator lamp must be provided.

## IV. Harmonization Efforts

Globally, there are several existing regulations, directives, and standards that pertain to motorcycle brake systems. As all share similarities, the Contracting Parties to the 1998 Agreement under WP.29 tentatively determined that the development of a GTR under the 1998 Agreement would be beneficial. During the 126th session of WP.29 of March 2002, the Executive Committee of the 1998 Agreement adopted a Program of Work, which included the development of a GTR on motorcycle brake systems. Subsequently, Canada offered to sponsor the GTR on motorcycle braking requirements at the 52nd session of the Working Party for Brakes and Running Gear (GRRF), in September 2002.[7] To

[5] *See* Brake Systems on Motorcycles Proposed Motor Vehicle Safety Standard, 36 FR 5516 (Mar. 24, 1971).

[6] The baseline check is used to establish a specific motorcycle's pre-test performance to provide a basis for comparison with post-test performance. This comparison is intended to ensure adequate brake performance, at reasonable lever and pedal forces, after numerous high-speed or wet brake stops.

[7] The Working Party for Brakes and Running Gear (GRRF) is made up of delegates from many countries around the world, and who have voting privileges. Representatives from manufacturing and consumer groups also attend and participate in the GRRF and informal working groups that are

proceed with the development of the GTR, the Executive Committee endorsed Canada's request to establish and chair an informal group on motorcycle brakes, at the 130th session of WP.29 in June 2003.

In an effort to select the best of existing performance requirements for a GTR, the U.S. and Canada conducted analyses of the relative stringency of three national motorcycle brake system regulations. These were the UNECE Regulation No. 78, FMVSS No. 122, and the Japanese Safety Standard JSS 12–61. The subsequent reports, along with proposed provisions of a GTR, were presented at GRRF meetings, and will be available in the docket. While using different methodologies, the results from the U.S./Canada report were similar to an industry-led report that examined the issue under the GRRF. These studies completed by the U.S., Canada, and the industry provided the basis for the development of the technical requirements of the GTR.

The following regulations, directives and international voluntary standards were considered and used as the basis for the development of the GTR:

- UNECE Regulation No. 78—Uniform provisions concerning the approval of vehicles of category L with regard to braking.
- FMVSS No.122, *Motorcycle brake systems.*
- Canada Motor Vehicle Safety Regulation No. 122—Motorcycle brake systems. (CMVSS No. 122).

**Note:** FMVSS and CMVSS No. 122 are substantially similar.

- Japan Safety Standard JSS12–61.
- Australian Design Rule 33/00—Brake systems for motorcycles and mopeds.
- International Organization for Standardization (ISO) 8710:1995, Motorcycles—Brakes and braking devices—tests and measurement methods.
- ISO 12364:2001, Two-wheeled motorcycles—Antilock braking systems (ABS)—tests and measurement methods.
- ISO 12366:2001, Two-wheeled mopeds—Antilock braking systems (ABS)—tests and measurement methods.

The informal group used the feedback from the GRRF presentations to assist with the completion of the proposed GTR, a copy of which is being placed in the docket.[8] Where national regulations or standards address the same subject, *e.g.*, dry stop or heat fade performance requirements, the informal group reviewed comparative data on the relative stringency of the requirements from the research and studies and included the most stringent options. Additional testing was conducted to confirm or refine the testing and performance requirements. Qualitative issues, such as which wet brake test to include, were discussed on the basis of the original rationales and the appropriateness of the tests to modern conditions and technologies. In each of these steps, specific technical issues were raised, discussed, and resolved, as discussed below. The informal working group held a total of eight meetings concerning the development of the GTR. In November 2006, WP.29 approved the GTR on Motorcycle Brake Systems, and established it in the Global Registry as Global Technical Regulation No. 3.

The GTR on motorcycle brake systems consists of a compilation of the most stringent and relevant test procedures and performance requirements from current standards and regulations. As a result of the comparison process, the selected performance requirements of the GTR are mainly drawn from the UNECE Regulation No. 78, the FMVSS No. 122 and the Japanese Safety Standard JSS 12–61 (JSS 12–61). The GTR is comprised of several fundamental tests, each with their respective test procedures and performance requirements. These tests and procedures are listed below along with the national regulation on which they are based:

- Burnish procedure (FMVSS No. 122)
- Dry stop test with each service brake control actuated separately (UNECE Regulation No. 78/JSS 12–61)
- Dry stop test with all service brake systems applied simultaneously (FMVSS No. 122)
- High speed test (JSS 12–61)
- Wet brake test (UNECE Regulation No. 78/JSS 12–61)
- Heat fade test (UNECE Regulation No. 78/JSS 12–61)
- Parking brake test (UNECE Regulation No. 78/JSS 12–61)
- ABS tests (UNECE Regulation No. 78/JSS 12–61)
- Partial failure test—split service brake systems (FMVSS No. 122)
- Power-assisted braking system failure test (new)

The GTR process was transparent to country delegates, industry representatives, public interest groups, and other interested parties. Information regarding the meetings and negotiations was publicly available through notices published periodically by the agency and UN Web site.[9] In the U.S., NHTSA published notice of its intent to add motorcycle brake systems to its list of recommendations of standards for consideration as a GTR in January 2001 (66 FR 4893, Jan. 18, 2001; Docket No. NHTSA–00–7538). The agency later published notice that Canada had submitted a proposal for the establishment of a motorcycle brakes GTR, and sought public comment on the formal proposal (69 FR 60460, Oct. 8, 2004; Docket No. NHTSA–03–14395). In October 2006, NHTSA published a further update on the status of the proposed motorcycle brake systems GTR, and requested comments specific to the motorcycle brakes GTR and NHTSA's intent to vote positively on behalf of the United States for its establishment (71 FR 59582, Oct. 10, 2006; Docket No. NHTSA–2003–14395). The agency did not receive comments in response to any of these notices regarding the motorcycle brake systems GTR.

## V. Proposed Improvements to FMVSS No. 122

### *A. General*

#### 1. New Terminology

For this proposal, definitions in FMVSS No. 122 (paragraph S4) were revised or added where necessary, such as new proposed terms used to describe antilock brake systems (ABS), vehicle maximum speed (Vmax), and peak braking coefficient (PBC). Additionally, in order to streamline the proposed regulatory text to more closely reflect the GTR text, some of the new proposed terms are common terminology and definitions based on the UN document titled ''Special Resolution No. 1 Concerning the Common Definitions of Vehicle Categories, Masses and Dimensions (S.R.1)'' [10] (UN Doc. S.R.1) developed for the purposes of the GTRs. Thus, certain new definitions that may

developing GTRs. Those that chose not to participate are kept apprised of the GTR progress from progress reports which are presented at the GRRF meetings and then posted on the UN's Web site.

[8] The first formal proposal for a GTR concerning motorcycle brake systems was presented during the 58th GRRF session in September 2005. A more detailed report on the technical details, deliberations and conclusions, which led to the proposed GTR, was provided separately as informal document No. GRRF–58–16. Both documents will be available in the docket.

[9] *See http://www.unece.org/trans/main/wp29/wp29wgs/wp29grrf/grrf-infmotobrake7.html* for a record of all GRRF meetings and documents presented therein.

[10] World Forum for Harmonization of Vehicle Regulations (WP.29), *Special Resolution No. 1 Concerning the Common Definitions of Vehicle Categories, Masses and Dimensions (S.R.1)*, U.N. Doc. TRANS/WP.29/1045 (Sept. 15, 2005), *available at http://www.unece.org/trans/doc/2005/wp29/TRANS-WP29-1045e.pdf.*

be similar to existing 49 CFR Part 571 definitions are proposed to be added to § 571.122 S4, *Definitions*. For example, current FMVSS No. 122 specifies that performance requirements must be met when the ''motorcycle weight is unloaded vehicle weight plus 200 pounds.'' [11] This is effectively equivalent to the mass term ''lightly loaded'' in the proposed rule, which is the testing condition specified for the proposed dry stop test—all service brake controls actuated, the high-speed test, the antilock brake systems tests, and the partial failure test.[12] These proposed terms, some of which may be similar or equivalent to existing terms defined elsewhere in 49 CFR Part 571, are used in the motorcycle brakes GTR in an effort to streamline the GTR and maximize harmonization benefits.

Additionally, the proposed rule divides motorcycles into five categories, which are referenced in the GTR. These motorcycle categories are based on number of wheels and maximum speed, and were originally defined in the UN Doc. S.R.1, as amended in May 2007.[13] We included these categories in the definitions portion of proposed FMVSS No. 122 because under the GTR some performance tests do not apply to certain motorcycle categories, and certain motorcycle categories have different performance requirements than others.

Category 3–1 and category 3–3 motorcycles are two-wheeled motorcycles. Category 3–1 motorcycles are two-wheeled motorcycles with an engine cylinder capacity not exceeding 50 $cm^3$ and a maximum design speed not exceeding 50 kilometers per hour (km/h). Category 3–3 motorcycles are two-wheeled motorcycles with an engine cylinder capacity exceeding 50 $cm^3$ or a maximum design speed exceeding 50 km/h. Category 3–2 motorcycles are three-wheeled motorcycles of any wheel arrangement with an engine cylinder capacity not exceeding 50 $cm^3$ and a maximum design speed not exceeding 50 km/h. Category 3–4 motorcycles are those manufactured with three wheels asymmetrically arranged in relation to the longitudinal median plane with an engine cylinder capacity exceeding 50 $cm^3$ or a maximum design speed exceeding 50 km/h. Finally, category 3–5 motorcycles are motorcycles manufactured with three wheels symmetrically arranged in relation to the longitudinal median plane with an engine cylinder capacity exceeding 50 $cm^3$ or a maximum design speed exceeding 50 km/h.

2. Vehicle Test Speed and Corrected Stopping Distance

Deceleration or stopping distance performance requirements are set for a specified initial test speed. While professional test riders can approach this initial test speed, it is unlikely that the test will be started at the exact speed specified, affecting the stopping distance measurement. The current FMVSS No. 122 does not specify a speed tolerance for this potential variation, but consistent with the GTR, the proposed rule specifies Japan's existing general tolerance of ±5 km/h in S6.1.4.

A method for correcting the measured stopping distance is specified in JSS 12–61 to compensate for the difference between the specified test speed and the actual speed where the brakes were applied. Although not specified directly in the regulations, the current FMVSS No. 122 and CMVSS No. 122 also apply a correction factor to test data, using the method specified in Society of Automotive Engineers (SAE) standard J299, *Stopping Distance Test Procedure*. The informal group evaluated the above noted stopping distance correction methods and the one specified in ISO 8710:1995, *Motorcycles—Brakes and braking devices—tests and measurement methods.*

SAE J299 offers the most basic method for estimating the corrected distance, and the method is applicable to a speed tolerance of ± 3.2 km/h (± 2 mph). The ISO 8710 and JSS 12–61 methods are based on the same principles, but also take into consideration the brake system reaction time. These methods are applicable to a wider speed tolerance of ± 5 km/h. However, a small error in handling the system reaction time is apparent in the ISO 8710 equation, which results in higher than expected corrected values. Based on this analysis, the informal group agreed that the stopping distance correction method specified in JSS 12–61 was the most appropriate for the GTR. Therefore, as with the existing Japanese standard, the specified test speeds in the GTR include a general tolerance of ± 5 km/h (S6.1.4), using the JSS stopping distance correction method to normalize the measured test results, if necessary, to compensate for the difference between the specified test speed and the actual speed where the brakes were applied (*see* S5.3.2(b)).

3. Test Method To Measure Peak Braking Coefficient

The peak braking coefficient (PBC) is a measure of the coefficient of friction of the test surface and is an important parameter in evaluating the brake performance of a vehicle. PBC is effectively equivalent to the peak friction coefficient (PFC) as defined in FMVSS No. 121, *Air brake systems,* and FMVSS No. 135, *Light vehicle brake systems*. The GTR specifies test surface conditions, one of which is that the high-friction ''test surface has a nominal [PBC] of 0.9, unless otherwise specified.'' For reasons of objectivity, we are specifying in the proposed rule a PBC equal to 0.9 for the high-friction dry test surface used for the motorcycle brake system tests. NHTSA has discussed the issues surrounding objective measurement of PBC/PFC at length in an early-1990s rulemaking that added ABS requirements for medium and heavy vehicles (*see e.g.*, 60 FR 13216, Mar. 10, 1995; Docket Nos. 92–29, 93–69).

FMVSS No. 122 currently specifies that the road tests be conducted on an 8-foot-wide level roadway having a skid number of 81. The skid number is also a measure of the coefficient of friction of the test surface and is derived by measuring the friction using a locked wheel, whereas the PBC is derived by measuring the peak surface friction before wheel lockup occurs. PBC is a more relevant surface friction measurement for non-locked wheel tests, as those included in FMVSS No. 122 and in the GTR. Other Federal motor vehicle safety standards for braking systems, FMVSS No. 121 and FMVSS No. 135, specify the road test surface using PBC of 0.9 when measured using the American Society for Testing and Materials (ASTM) E1136–93 (Reapproved 2003) standard reference test tire, in accordance with ASTM Method E1337–90 (Reapproved 2002), at a speed of 40 mph without water delivery.

The UNECE Regulation No. 78 and the JSS 12–61 do not specify the coefficient of friction for the test surface but prescribe that the test surface be level, dry, and affording good adhesion. For the ABS tests where road surface

[11] 49 CFR 571.122, S6.1. ''Unloaded vehicle weight'' is defined under 49 CFR 571.3(b) to mean ''the weight of a vehicle with maximum capacity of all fluids necessary for operation of the vehicle, but without cargo, occupants, or accessories that are ordinarily removed from the vehicle when they are not in use.''

[12] Lightly loaded means the sum of unladen vehicle mass (mass of the vehicle with bodywork and all factory fitted equipment, and fuel tanks filled to at least 90 percent) and driver mass ''plus 15 kg for test equipment, or the laden condition, whichever is less.'' FMVSS No. 122 S4, *Definitions* (proposed).

[13] *See* WP.29, *Amendment to Special Resolution No. 1 Concerning the Common Definitions of Vehicle Categories, Masses, and Dimensions,* U.N. Doc. ECE/TRANS/WP.29/1045/Amend.1 (May 9, 2007), *available at http://www.unece.org/trans/main/wp29/wp29wgs/wp29gen/wp29fdoc/1000/ECE-TRANS-WP29-1045a1e.pdf.*

friction requirements are specified, the UNECE Regulation No. 78 and JSS 12–61 specify a method that is based on the same principles as measuring the PBC. This is determined by finding the wheel lock threshold through a series of braking tests with the ABS disabled for the individual motorcycle being evaluated, and uses the tires on the motorcycle compared with the ASTM Method, which uses a reference test (control) tire on a skid trailer.

The GTR defines the test surface using a PBC value instead of a skid number value since peak braking coefficient is a more representative measure of the type of braking tests performed in the requirements with a rolling tire. However, the decision was made to not specify the method used to measure the coefficient of friction but leave it to the national regulations to specify which of the above test methods should be used to measure PBC. In the U.S., the ASTM Method for measuring PBC to define surface friction has been included in Federal motor vehicle safety standards since the early-1990's and was also used by the U.S. automotive industry prior to that date. Accordingly, the agency proposes that the PBC of the test surface will be measured using the ASTM E1136–93 (Reapproved 2003) standard reference test tire, in accordance with ASTM Method E1337–90 (Reapproved 2002).

As mentioned above, the GTR also maintains an option for Contracting Parties to specify in their respective national regulations the value of PBC for the high-friction dry test surface used for the motorcycle brake system tests. Because of objectivity concerns, we are proposing a PBC of 0.9 as opposed to a nominal PBC of 0.9 (the default option in the GTR).

4. Test Sequence

We are proposing a specific testing order to eliminate any potential effect of the test sequence on braking performance and to harmonize with the GTR. The proposed sequence was selected based on increasing severity of the test on the motorcycle and its brake components, in order to preserve the condition of the brakes.

The current FMVSS No. 122 specifies a particular sequence in which tests should be conducted, ending with the wet brake test. The purpose here is to minimize the variability of test results through consistency in both the condition of the brakes throughout the tests and in the way in which the brakes are evaluated. There is no specified test order in the UNECE Regulation No. 78. Similarly, JSS 12–61 indicates that tests can be done in any order, with the exception that the fade test be conducted last.

The fade test would have the greatest effect on the condition of the motorcycle brakes, which could affect brake performance in subsequent tests. For this reason, current FMVSS No. 122 specifies that a re-burnishing be conducted after the fade test, to refresh the brake components. In order to eliminate the need for re-burnishing, the GTR specifies that the fade test be the last of the motorcycle brake system performance tests, which is consistent with the existing practice in JSS 12–61.

The ABS test would be the next most severe test, which will result in braking at or near the limits of traction. Thus, the GTR specifies that the ABS test would precede the fade test, for motorcycles equipped with ABS. The remaining tests are not as severe on the brake system and tires, therefore the GTR sequenced them according to increasing test speed for the dry stop performance tests, followed by the wet brake performance test.

Consistent with the GTR, we are proposing a specified test sequence as follows:

(1) Dry stop test—single brake control actuated;

(2) Dry stop test—all service brake controls actuated;

(3) High speed test;

(4) Wet brake test;

(5) If fitted:

(a) Parking brake system test;

(b) ABS test;

(c) Partial failure, for split service brake systems test;

(d) Power-assisted braking system failure test.

(6) Heat fade test.

The informal group that developed the technical specifications for the GTR assessed alternatives to the testing sequence, including selecting a test sequence based on the loading of the motorcycle in order to save time, and relocating the wet brake test to second-last, before the final fade test. Either option would place the more severe brake tests earlier in the test sequence, which could affect braking performance in subsequent tests. The GTR therefore kept the test sequence as noted above.

5. Brake Application Force Measurement

Controls for the application of the brakes can include hand and foot actuated control levers. The various national standards and regulations have slightly different brake control input force limits, and in the case of a hand actuated control lever, there is also a discrepancy as to the location of application of the input force. One consistent element is the location and direction of application of the input force to the foot actuated lever (*i.e.* pedal). Consistent with the GTR, the proposed rule specifies input forces in accordance with the national regulation on which the individual test is based, to minimize confusion.

The respective input forces are noted in the following table:

| Regulation | Foot control, $F_P$ (N) | Hand control, $F_L$ (N) |
|---|---|---|
| FMVSS No. 122 | $25 < F_P < 400$ | $10 < F_L < 245$ |
| UNECE Regulation No. 78/JSS 12–61 | $F_P < 350$ | $F_L < 200$ |

A discussion on brake control actuation force specifications for evaluating motorcycles equipped with ABS is provided below in paragraph V.B.7.

With respect to the location of the input force on the hand-controlled lever, UNECE Regulation No. 78 and JSS 12–61 place the input force 50 mm from the end of the lever, while FMVSS No. 122 locates the input force 30 mm from the end of the handle bar grip. On most models (but not all), the control lever typically extends slightly beyond the handle bar grip, such that the control forces are almost at the same location regardless of the method followed. Depending on the regulation, however, it is not entirely clear whether this measurement should be taken along the length of the control lever or parallel to the handle bar grip; or, how to measure with a curved or angled control lever. Some interpretation is required.

In developing the GTR, there was agreement that none of the three national regulations is clear enough with respect to measuring the location of the input force on the hand-controlled lever. In an effort to define a common practice, the GTR includes a

revised description for the location of the input force on the control lever and its direction of application, based on ISO 8710:1995, *Motorcycles—Brakes and braking devices—tests and measurement methods*. This proposed rule adopts the GTR's harmonized specification of input force.

Finally, for those motorcycles that use hydraulic fluid for brake force transmission, the GTR stipulates that the master cylinder shall have a sealed, covered, separate reservoir for each brake system. This includes one or more separate reservoirs located within the same container, such as commonly found on passenger cars. Such containers may only have one sealed, covered filling cap. The proposed rule incorporates these hydraulic service brake system requirements in S5.1.9.

6. Brake Temperature Measurement

Brake test requirements typically specify that initial brake temperature (IBT) be measured at the start of each braking performance run to enhance test repeatability. The two measurement methods that are generally used in brake standards and regulations worldwide include (1) the use of plug-type thermocouples, and (2) the use of rubbing-type thermocouples. We propose to retain the plug-type thermocouples brake temperature measurement method in FMVSS No. 122.

Plug-type thermocouples are imbedded in the brake friction material (brake pad for disc brakes or brake shoes for drum brakes) one millimeter below the contact surface between the friction material and the brake disc or brake drum. This placement of the thermocouple allows no contact with the friction surfaces and provides an accurate reading of the temperature at the friction material/disc or drum interface. Rubbing-type thermocouples are placed so that they are in direct contact with both the friction material and the disc or drum. Although this type of thermocouple can provide a quicker response to temperature changes, it has some limitations regarding its durability and its effectiveness when used on brakes with cross-drilled or grooved discs. In addition, for a given brake system, the rubbing-type thermocouple generally provides higher temperature readings compared with the plug-type thermocouple.

The two methods of measuring the IBT were included in the GTR and each Contracting Party may specify which temperature measurement would be accepted in its national regulation. FMVSS No. 122, as well as all the other brake standards in the Federal motor vehicle safety standards, currently specifies the plug-type thermocouple for measuring the initial brake temperature. UNECE Regulation No. 78 and JSS 12–61 also prescribe brake temperature measurement, but neither regulation makes reference to specific measurement equipment or installation methods. NHTSA does not have experience using the rubbing-type thermocouple either in brake research or compliance testing. Given the limitations of the rubbing-type thermocouple, we believe that the plug-type thermocouple would be the more effective option for measuring IBT in the proposed FMVSS No. 122. Therefore, the proposed rule specifies that initial brake temperature is measured by plug-type thermocouples.

With respect to the actual brake temperature values specified for testing purposes, each of the national regulations on which the GTR performance requirements are based specifies a value for the IBT. For most tests, the UNECE Regulation No. 78 and JSS 12–61 specify that the IBT shall be less than or equal to 100 °C (212 °F), whereas FMVSS No. 122 specifies an IBT between 55 °C and 65 °C (130 °F and 150 °F). In developing the GTR, it was agreed that a narrow IBT range could improve the repeatability of the performance tests. However, test data indicated that the narrow range specified by FMVSS No. 122 might not be achievable for those motorcycles equipped with a combined brake system. Therefore, the GTR specifies an IBT between 55 °C and 100 °C in order to encompass all brake systems, and the proposed rule specifies this same IBT range as a test condition.

7. Burnishing Procedure

The current FMVSS No. 122 includes a burnishing procedure. In order to harmonize with the GTR, we are proposing a slight variation of the current procedure, to include some aspects of procedures currently used by motorcycle manufacturers in preparation for UNECE Regulation No. 78/JSS 12–61 type approval testing.

The burnishing procedure serves as a conditioning of the foundation brake components to permit the brake system to achieve its full capability. Burnishing typically matches the friction components to one-another and results in more stable and repeatable stops during testing. UNECE Regulation No. 78 and JSS 12–61 do not include any burnishing procedure. Under the UNECE and the JSS regulations, the motorcycle is generally presented for type approval compliance testing in a burnished condition, using a procedure determined by the motorcycle manufacturer. All Federal motor vehicle safety standards for brake systems (FMVSS Nos. 105, 121, 122 and 135) currently include a burnishing procedure. The burnishing procedure of FMVSS No. 122 specifies 200 stops with both brakes applied simultaneously, decelerating from a speed of 30 mph at 12 fps$^2$ with an IBT between 55 °C and 65 °C (130 °F and 150 °F).

The burnishing procedure in the GTR is based on FMVSS No. 122, but also includes some aspects of procedures currently used by motorcycle manufacturers in preparation for UNECE Regulation No. 78/JSS 12–61 type approval testing. For example, the initial speed proposed for the procedure has been changed to 50 km/h to round-off the metric equivalent, which is a slight increase from 30 mph (48 km/h) as specified by FMVSS No. 122. An initial speed of 0.8 Vmax was adopted for category 3–1 and 3–2 motorcycles, which have a Vmax of 50 km/h or less. Instead of making complete stops, the proposal also includes braking the motorcycle at the specified deceleration down to a speed between 5 km/h and 10 km/h, after which the motorcycle may be accelerated to the initial test speed for the next stop in the burnishing procedure. The primary reason for not braking the motorcycle to a complete stop is to expedite the burnishing procedure. The increased motorcycle kinetic energy resulting from the small initial speed increase of 2 km/h is likely to offset any reduction in kinetic energy resulting from not braking the motorcycle until a complete stop is reached. The GTR specifies burnishing the brakes separately since this would result in a more complete burnish for both front and rear brakes, as compared with the current FMVSS No. 122 method of using both brakes simultaneously. Hence, consistent with the GTR, the proposed rule specifies that each brake be burnished for 100 decelerations.

Finally, the GTR changes the IBT from the range of 55 °C to 65 °C currently specified in FMVSS No. 122 to an IBT less than or equal to 100 °C. The primary reasons for changing the IBT are to accommodate the higher operational temperatures of motorcycles equipped with disc brakes and to reduce the cooling times between stops. In developing the GTR, it was agreed that although a narrow IBT range is important to achieve good repeatability of the performance tests, the IBT range is not as critical for the burnishing procedure.

8. Notice of Wear

We are proposing the GTR requirement that ''friction material thickness shall be visible without disassembly, or where the friction material is not visible, wear shall be assessed by means of a device designed for that purpose.'' FMVSS No. 122 S5.2.2, *Notice of wear* (proposed). Current FMVSS No. 122 requires that the ''brake system [ ] be installed so that the lining thickness of drum brake shoes may be visually inspected, either directly or by use of a mirror without removing the drums, and so that disc brake friction lining thickness may be visually inspected without removing the pads.'' FMVSS No. 122 S5.1.5, *Other requirements*. Allowing wear of friction material thickness to be assessed either visually or by means of a device increases design freedom while serving the same purpose of indicating friction material wear, without the need for disassembly.

*B. Specific Performance Tests*

1. Dry Stop Test—Single Brake Control Actuated

The GTR has a provision for a dry stop test with single brake control that is based on UNECE Regulation No. 78 and JSS 12–61 tests. Current FMVSS No. 122 does not have a requirement that tests each brake system separately in a split brake service system, but only a requirement that tests the front and rear brake simultaneously. In the main FMVSS No. 122 dry stop test with both brake controls actuated simultaneously, the test rider judges how to apportion the force actuated to the front and rear brakes. This may give less repeatable test results or allow the test rider to compensate for a ''weak'' brake. As such, an additional test specifying that each split brake be tested individually would improve FMVSS No. 122.

The purpose of a dry stop test requirement with the separate actuation of each brake control is to ensure a minimum level of motorcycle braking performance on a dry road surface for each independent brake system. Each of the major national motorcycle brake regulations, UNECE Regulation No. 78, FMVSS No. 122, and JSS 12–61, includes a dry stop test in its test procedures. The UNECE Regulation No. 78 and the JSS 12–61 test procedures and performance requirements are similar. The UNECE Regulation No. 78 and JSS 12–61 regulations require that the braking performance be evaluated separately for each brake control, with the motorcycle in the laden condition and at test speeds of 40 km/h or 60 km/h depending on the motorcycle category. The only exception is for motorcycle category 3–4, where it is specified that the brakes at all wheels shall be operated via a single foot actuated control.

Current FMVSS No. 122 performance requirements are quite different as they specify motorcycles be tested in what is effectively the lightly-loaded condition,[14] and with all brake controls actuated simultaneously. The exception is the pre-burnish test requirements, which specify that each independently actuated service brake system must be capable of stopping the motorcycle (in effectively the lightly-loaded condition) within specified stopping distances. Current FMVSS No. 122 also specifies test requirements from 30 mph (48.3 km/h), 60 mph (96.6 km/h) and 80 mph (128.8 km/h). Consistent with being tested in the lightly-loaded condition and with both brakes applied together, the FMVSS No. 122 deceleration requirements are higher than in the UNECE Regulation No. 78 and JSS 12–61. The FMVSS No. 122 and the UNECE Regulation No. 78/JSS 12–61 tests are conducted with the engine disconnected, which means that only the foundation brake performance is measured and engine braking is not a factor. Although current FMVSS No. 122 also specifies that independent service brake systems be evaluated separately, that test is conducted with the brakes in the pre-burnished condition, hence requiring a lower level of performance.

In independent studies of the relative severity of the tests as they apply to category 3–3 motorcycles, the industry concluded that the UNECE Regulation No. 78/JSS 12–61 test was marginally more stringent, whereas the NHTSA/Transport Canada findings indicated that the FMVSS No. 122 test was marginally more stringent.[15] Despite the difference in these findings, neither study demonstrated a significant difference in stringency between these national regulations.

The primary advantage of the UNECE Regulation No. 78/JSS 12–61 requirement is that each brake control is tested separately, which ensures that each independent brake system meets specific performance criteria. As mentioned above, in the main FMVSS No. 122 dry stop test with both brake controls actuated simultaneously, the test rider judges how to apportion the force actuated to the front and rear brakes. This may give less repeatable test results or allow the test rider to compensate for a ''weak'' brake. Therefore, consistent with the GTR, the proposed rule includes the dry stop test with single brake control based on UNECE Regulation No. 78/JSS 12–61 requirements. Unlike present UNECE/JSS national standards, the performance requirement can be met only through measurement of the stopping distance.

2. Dry Stop Test—All Service Brake Controls Actuated

The GTR contains a provision to test the service brakes with the brake control applied simultaneously, which is very similar to the current FMVSS No. 122 dry stop test with both brake controls actuated simultaneously. The purpose of this test with all service brake controls actuated is to evaluate the full braking performance of motorcycles from a speed of 100 km/h with both front and rear brakes applied simultaneously. The current FMVSS No. 122 includes a stopping distance test from 60 mph (96 km/h) with all brake controls actuated simultaneously, with the motorcycle in the lightly-loaded condition. The stopping distance requirement from this speed is 185 feet (56.4 meters), which is equivalent to an average deceleration of 6.4 $m/s^2$ over the entire stop. The current requirements of UNECE Regulation No. 78 and JSS 12–61 do not include a performance test from such a speed.

The GTR performance specifications are based on the FMVSS No. 122 test noted above. These test parameters are relevant since they represent the typical operating conditions of a motorcycle with a single rider traveling at highway speeds. In addition, testing in the lightly loaded condition with a full brake application helps to evaluate motorcycle stability during braking. Consistent with the GTR, in the proposed rule this test would apply to motorcycle categories 3–3, 3–4 and 3–5, but not to motorcycle categories 3–1 and 3–2. The latter are motorcycles with a maximum speed of less than 50 km/h. Given this speed restriction, motorcycle categories 3–1 and 3–2 will use a test speed based on

[14] As mentioned above, current FMVSS No. 122 specifies that performance requirements must be met when the ''motorcycle weight is unloaded vehicle weight plus 200 pounds.'' 49 CFR 571.122, S6.1. ''Unloaded vehicle weight'' is defined under 49 CFR 571.3(b) to mean ''the weight of a vehicle with maximum capacity of all fluids necessary for operation of the vehicle, but without cargo, occupants, or accessories that are ordinarily removed from the vehicle when they are not in use.'' This current FMVSS No. 122 test mass condition is effectively equivalent to the mass condition ''lightly loaded'' in the proposed rule. Lightly loaded means the sum of unladen vehicle mass (mass of the vehicle with bodywork and all factory fitted equipment, and fuel tanks filled to at least 90 percent) and driver mass ''plus 15 kg for test equipment, or the laden condition, whichever is less.'' FMVSS No. 122 S4, *Definitions* (proposed).

[15] These studies will be posted in the current docket.

90 percent of the maximum speed, or almost at the same exact speed as the 40 km/h test speed for the dry stop test—single brake control actuated. As the level of stringency was deemed comparable for both dry stop tests, it was agreed that specifying a dry stop test with all the service brake controls actuated for motorcycle categories 3–1 and 3–2 would be redundant.

The brake application force specified in the GTR is less than or equal to 245 N for hand levers and less than or equal to 400 N for foot pedals. Since this GTR performance requirement is adopted from FMVSS No. 122, with a slight increase in speed to 100 km/h from 96 km/h, the GTR retained the corresponding control lever/pedal force parameters to maintain the stringency of the original test. If this dry stop test was adopted with the force parameters from UNECE Regulation No. 78 and JSS 12–61 Standards (200 N/350 N for the hand lever/foot pedal controls, respectively), it would increase the stringency of the test since it would effectively be proposing that the current FMVSS No. 122 performance requirements be met with lower application forces.

The stopping distance performance requirement from a speed of 100 km/h is 198.5 feet (60.5 meters). In keeping with the original requirements on which this test is based (rounded to 100 km/h), the GTR maintains the performance requirement for this dry stop test in terms of stopping distance only.

The approach for setting forth the performance requirements in current FMVSS No. 122 is to specify progressively higher performance requirements at set break points as test speeds decrease, based mainly on the fact that the PBC increases as the motorcycle speed decreases. When viewed in the context of FMVSS No. 122, the placement of break points are provided to accommodate the current FMVSS No. 122 test requirements from speeds of 30 mph, 60 mph, 80 mph and up to 120 mph. However, for the purpose of the GTR, it became evident that maintaining the original FMVSS No. 122 break points would have the unintended effect of introducing two levels of stringency that are dependent on the test speed, making it inconsistent with the other dry stop tests in the GTR—*i.e.*, both the high speed test and the dry stop test single brake control actuated have constant performance requirements irrespective of the test speed. For this reason, the GTR contains a single performance requirement based on the 100 km/h performance requirement in the current FMVSS No. 122, for all motorcycles to which this test applies.

3. High-Speed Test

The purpose of the high-speed test is to evaluate the full braking performance of the motorcycle from a high speed and with both front and rear brakes applied simultaneously. Each of the major national motorcycle brake regulations, UNECE Regulation No. 78, FMVSS No. 122, and JSS 12–61, includes a high-speed test in its requirements. The UNECE Regulation No. 78 and the JSS 12–61 tests are similar and are performed from a speed of 160 km/h or 0.8 of the vehicle's maximum speed (Vmax), whichever is less. The UNECE Regulation No. 78 test requires that motorcycle braking performance and behavior be recorded; however, it does not have specific performance requirements. The performance required by JSS 12–61 includes achieving a mean fully developed deceleration (MFDD) of at least 5.8 $m/s^2$ or coming to a stop prior to the equivalent braking distance. The high-speed effectiveness test of FMVSS No. 122 is conducted from a test speed that is based on the speed capability of the motorcycle, not exceeding 193.2 km/h (120 mph). When tested at the maximum speed of 120 mph, the required stopping distance is 861 feet (262.5 meters), equivalent to an average deceleration of 5.5 $m/s^2$. Based on these figures, the FMVSS No. 122 test appears to be more stringent due to the higher test speed, whereas the JSS 12–61 appears to be more stringent based on a deceleration requirement.

The test conditions for current FMVSS No. 122 and the UNECE Regulation No. 78/JSS 12–61 high speed tests are quite similar, including the motorcycle test mass and the simultaneous application of both brakes. The main difference between test parameters, besides the difference in the motorcycle test speeds, is that the FMVSS No. 122 test is conducted with the engine disconnected (clutch disengaged), whereas the UNECE Regulation No. 78/JSS 12–61 test is conducted with the engine connected (clutch engaged). With a connected engine, the subsequent engine braking can assist in the deceleration of the motorcycle. This effect is reduced to a minimum by placing the transmission in the highest gear during the braking maneuver. The benefit of having the engine connected is the effect of stabilizing the motorcycle while braking from such a high speed.

Based on the NHTSA/Transport Canada Review of Motorcycle Brake Standards,[16] it was determined during development of the GTR that 100 mph (160 km/h) or 0.8 Vmax is adequate for a high speed effectiveness test since the benefits of testing from higher speeds do not warrant the potential hazard to which the rider is exposed. The GTR limits the test speed to 160 km/h to address test facility limitations and safety concerns. The FMVSS No. 122 and JSS 12–61 performance requirements are very similar from a maximum speed of 160 km/h. The equivalent average deceleration in FMVSS No. 122 is 5.5 $m/s^2$ from 100 mph, compared to the JSS 12–61 MFDD of 5.8 $m/s^2$ from 160 km/h. In actual testing, the performance differences for the high-speed tests were too small to clearly identify one testing procedure as being more stringent than the other. The GTR also specifies that the high speed test be conducted with the motorcycle engine connected and the transmission in the highest gear, per JSS 12–61, which has the effect of enhancing motorcycle stability during braking from test speeds of 160 km/h.

4. Wet Brake Test

The proposed wet brake test provision differs from the current FMVSS No. 122 wet brake test in that instead of submerging the brake system in water and then testing the brakes, the water is sprayed directly onto the brakes during the test. This procedure is based on UNECE Regulation No. 78 and JSS 12–61, which the reviews of motorcycle brake standards found to be more stringent than current FMVSS No. 122. Accordingly, we believe that motorcycle brake safety will be enhanced as a result of this change in wet brake test procedure.

The purpose of the wet brake test is to ensure a minimum level of braking performance when the motorcycle is ridden in heavy rain conditions. Each of the major national motorcycle brake regulations, UNECE Regulation No. 78, FMVSS No. 122, and JSS 12–61, includes a wet brake test, but different philosophies are found in them. The UNECE Regulation No. 78 and the JSS 12–61 test procedures and performance requirements are similar, but are different from the FMVSS No. 122 test. UNECE Regulation No. 78 was developed 20 years ago in the United Kingdom to deal with problems in the field where the braking performance of motorcycles with exposed disc brakes was significantly reduced when ridden in heavy rain. This coincided with the large scale introduction of disc brakes on motorcycles. Therefore, in order to simulate heavy rain conditions, the UNECE Regulation No. 78 test requires a brake performance test with a wetted brake. This is achieved by spraying

[16] This study will be posted in the current docket.

water directly onto the brakes during the test. The UNECE Regulation No. 78 wet brake performance evaluation begins with a baseline test where each brake is tested separately and is required to decelerate a laden motorcycle at a specified rate, using the conditions of the dry stop test—single brake control actuated. For comparison, the same test is then repeated, but with a constant spray of water to wet the brakes. The difference in performance is evaluated immediately after the application of the respective brake, to ensure a minimum rise in deceleration performance with wet brakes. In addition, a drying brake can sometimes result in an excessively high pad friction leading to motorcycle instability and wheel lock; therefore a check for this ''over recovery'' is also included.

As with the UNECE Regulation No. 78/JSS 12–61 requirement, the current FMVSS No. 122 specifies an evaluation of wet brake performance by comparison of a baseline dry stop test result with performance after wetting. However, the philosophy behind the test is quite different, as the test is based on brake performance recovery following the motorcycle crossing an area of standing water. As such, the wetting procedure consists of immersing the front and rear brakes in water, separately, for two minutes each. Performance is evaluated with all brakes applied simultaneously and the wet brake recovery performance is based on the fifth stop after having immersed the brakes. The motorcycle is also tested in the lightly-loaded condition. Practical problems can occur when carrying out the brake immersion, due to low exhaust systems and other mechanical system locations, which may affect the motorcycle engine or transmission.

The respective brake regulations address minimum performance requirements for wet brakes, albeit under different conditions. In terms of the overall performance requirements, the stringency comparison studies by NHTSA/Transport Canada and the industry both concluded that the UNECE Regulation No. 78 /JSS 12–61 performance requirements are more stringent. During development of the GTR, it was agreed that the UNECE Regulation No. 78/JSS 12–61 procedure akin to braking while riding in the rain is a more common operating condition than crossing an area covered with water. Therefore, consistent with the GTR, the proposed wet brake test is based on the contents of the UNECE Regulation No. 78/JSS 12–61 test, and is applicable to all motorcycle categories. At present, the UNECE Regulation No. 78/JSS 12–61 procedure excludes brakes that are fully enclosed because water is prevented from reaching the braking surface. For the purposes of the GTR, however, there was general agreement that the scope be expanded to include testing of enclosed disc brakes or drum brakes that have ventilation or inspection holes, as these include potential entry points for water spray.

5. Heat Fade Test

We propose to change the current FMVSS No. 122 heat fade test to the GTR heat fade test provision, which is based on the UNECE Regulation No. 78 and JSS 12–61 fade test, because the results from both stringency studies indicated that the latter fade test is more stringent than the current FMVSS No. 122 fade test. The heat fade test ensures that a minimum level of braking performance is maintained after numerous consecutive brake applications. In terms of real world conditions, this could be akin to frequent braking while driving in a busy suburban area or on a downhill gradient. Each of the current national regulations includes a test to evaluate the brake for heat fade and any change in brake performance.

As with the wet brake test, the UNECE Regulation No. 78 and JSS 12–61 share the same test procedure and performance requirements. Each requires that the brakes be tested separately, with the motorcycle loaded to its maximum mass capacity. The FMVSS No. 122 test parameters are different in that all brakes are applied simultaneously and the motorcycle test mass is set at 200 pounds (90.7 kg) above the unloaded motorcycle mass (the 200 pounds includes the mass of the test rider and test equipment).

Each test begins with a baseline test with an IBT between 55 °C and 100 °C, which provides the benchmark for performance comparison and evaluation of the heated brakes. This is followed by 10 consecutive fade stops with the purpose of building heat within the brakes. The similarities between national regulations end here. In the UNECE Regulation No. 78/JSS 12–61, the final performance test occurs with one stop immediately following the 10 fade stops. FMVSS No. 122 specifies an additional five recovery stops, and the performance in the fifth stop is compared to the baseline performance. The respective regulation test parameters include additional differences such as initial test speeds, brake lever and pedal control forces, deceleration rates, and the transmission gear selection (engine connected/disconnected). Finally, to evaluate brake fade performance, the FMVSS No. 122 procedure compares the brake pedal and lever actuation forces necessary to maintain the same deceleration as in the baseline test, whereas the UNECE Regulation No. 78/JSS 12–61 procedures compare deceleration (or stopping distance) for the same brake pedal and lever actuation forces as used in the baseline test.

Although the national regulations have distinct differences, they share the common goal of evaluating the effect of heat on braking performance. The stringency of the respective tests was evaluated separately by the joint NHTSA and Transport Canada study, and by the industry. The results from both studies indicated that the UNECE Regulation No. 78/JSS 12–61 fade test was more stringent, thus providing the basis for the testing specifications of the GTR.

Minor adjustments were made to the referenced national test procedure. In addition to the IBT adjustment, the text was revised to use the average brake control force from the baseline test, calculated from the measured values between 80 percent and 10 percent of the specified vehicle test speed. The brake heating procedure was also made more objective. UNECE Regulation No. 78 presently requires that the motorcycle decelerate to the lesser of 3 $m/s^2$ or the maximum achievable deceleration rate with that brake control. For the purposes of the GTR, the latter performance requirement is made more objective by specifying that, at a minimum, the motorcycle meet the deceleration rate for the dry stop test—single brake control actuated, as noted in Table 2.

The proposed fade test is applicable to motorcycle categories 3–3, 3–4 and 3–5, as is presently the case in the UNECE Regulation No. 78/JSS 12–61 and FMVSS No. 122. Only Canada's national regulation, CMVSS No. 122, includes a fade test requirement for motorcycles with an engine size less than 50 cc and a top speed less than 50 km/h (*i.e.*, motorcycle categories 3–1 and 3–2). However, during development of the GTR, none of the participants in the informal group could substantiate the need to include the fade test for those motorcycle categories. There was no negative experience reported due to the absence of a fade test for these smaller motorcycles, and therefore the GTR does not specify the heat fade test for such motorcycles.

6. Parking Brake System Test

The proposed parking brake test would improve upon the current FMVSS No. 122 parking brake system test by specifying a more stringent

loading condition. The purpose of the parking brake system performance requirement is to ensure that motorcycles required to be equipped with parking brakes can remain stationary without rolling away when parked on an incline.

The current FMVSS No. 122 specifies that the parking brake system be capable of holding the motorcycle stationary for five minutes when tested in the lightly-loaded condition on a 30 percent grade, in both the forward and reverse directions (to the limit of traction of the braked wheels). In addition, FMVSS No. 122 requires that the parking brake be of a friction type with solely mechanical means to retain engagement. The parking brake requirements in UNECE Regulation No. 78/JSS 12–61 are equivalent and require that the brake must be capable of holding the motorcycle stationary on an 18 percent grade in the laden condition (*i.e.*, the maximum weight limit specified by the manufacturer), in both the forward and reverse directions. No time limit is specified in either the UNECE or JSS regulation.

The GTR uses the UNECE Regulation No. 78/JSS 12–61 parking brake test. The level of stringency appears to be similar to that in FMVSS No. 122, given the UNECE Regulation No. 78's laden condition on an 18 percent grade versus the FMVSS No. 122's lightly-loaded condition on a 30 percent grade. During development of the GTR, however, it was agreed that the laden condition is the worse case loading condition and test facilities around the world are more likely to have an 18 percent grade than a 30 percent grade available for testing.

Consistent with the GTR, the proposed parking brake test includes a performance requirement that the motorcycle remain stationary for five minutes, which is present in current FMVSS No. 122. In addition, the GTR retains the common requirement that the parking brake system be designed to retain engagement solely by mechanical means, but not include the current FMVSS No. 122 requirement that the parking brake be of a friction type. This removes a design restriction and allows a manufacturer to use any parking brake system design that retains engagement by mechanical means.

7. Antilock Brake System (ABS) Performance Test

The current FMVSS No. 122 does not have any requirements for ABS performance. The proposed rule does not require ABS but does contain ABS performance requirements when such brake systems are present, to ensure minimum ABS performance in motorcycles that are so equipped. The purpose of the specified ABS test procedures is to assess the stability and stopping performance of a motorcycle with the ABS functioning.

UNECE Regulation No. 78 and JSS 12–61 include ABS-specific performance requirements but do not require that ABS be fitted on motorcycles. Common to both national regulations are wheel lock tests on high-friction and low-friction surfaces and an ABS failed systems performance test. In addition, the UNECE Regulation No. 78 performance requirements include an ABS adhesion utilization (*i.e.*, efficiency) test on high-friction and low-friction surfaces, a high-friction surface to low-friction surface transition stop and a low-friction surface to high-friction surface transition stop. As mentioned above, current FMVSS No. 122 does not include any ABS-specific performance requirements.

The agency believes that the ABS definition developed for the GTR to upgrade FMVSS No. 122 is not as comprehensive as the ABS definition the agency uses in other Federal motor vehicle safety standards, FMVSS No. 105, *Hydraulic and Electric Brake Systems*; FMVSS No. 121, *Air Brake Systems*; and FMVSS No. 135, *Light Vehicle Brake Systems*. However, we believe both definitions can be interpreted to mean the same thing. The two definitions are presented below:

- GTR Definition: *Antilock brake system* or *ABS* means a system which senses wheel slip and automatically modulates the pressure producing the braking forces at the wheel(s) to limit the degree of wheel slip.
- The current FMVSS Definition: *Antilock brake system* or *ABS* means a portion of a service brake system that automatically controls the degree of rotational wheel slip during braking by:

(1) Sensing the rate of angular rotation of the wheels;

(2) Transmitting signals regarding the rate of wheel angular rotation to one or more controlling devices which interpret those signals and generate responsive controlling output signals; and

(3) Transmitting those controlling signals to one or more modulators which adjust brake actuating forces in response to those signals.

The agency seeks comment on the proposed GTR definition and on the ABS definition used in the other braking standards.

During the development of the GTR, each of the ABS performance tests and their corresponding requirements was reviewed to assess their appropriateness for the proposed motorcycle brake system GTR.[17] With the exception of the ABS adhesion utilization test and the low-friction surface to high-friction surface transition stop, the Contracting Parties agreed to adopt, with selected revisions and clarifications, the remaining ABS test procedures and performance requirements. Possible alternatives for those tests on which agreement was not achieved are discussed further below.

In the case of the wheel lock test on a low-friction surface, the present UNECE Regulation No. 78 states that for a road surface with a PBC less than or equal to 0.45, the specified initial test speed of 80 km/h may be reduced for safety reasons, but does not specify by how much. In order to ensure consistency in the way the motorcycles are evaluated and to achieve the objective of rider safety, the GTR and proposed rule specify that the test speed is the lesser of 0.8 Vmax or 60 km/h for the low-friction surface test.

With regard to the low-friction to high-friction surface transition test, it was initially suggested that the motorcycle be evaluated while crossing from a wetted low-friction surface to a wetted high-friction surface (with a PBC exceeding 0.8). There was no reported issue in obtaining a wetted surface with a PBC exceeding 0.8 during the ABS validation tests. However, it was noted that there might be a problem in obtaining such a PBC on a wetted surface, and therefore the GTR removed all references to a wetted surface.

Finally, when evaluating the performance of the ABS, the GTR specifies that the ABS be cycling throughout the respective tests. This means that the ABS is repeatedly modulating the brake force to prevent the directly controlled wheels from locking. Depending on the system, some brake feedback may be felt through the brake control, such that it is not possible to maintain the specified control force. Data obtained during the ABS validation tests revealed challenges while trying to maintain a consistent maximum brake control force, within the 20 percent range as initially proposed. Also, of the motorcycles tested, all ABS systems cycled at brake control actuation forces well below the proposed maximum limits.

The GTR specifies that the test rider apply sufficient force to ensure that the ABS is fully cycling throughout the test. Two methodologies were considered to accomplish this result. The first was based on the tests in UNECE Regulation

[17] ABS performance test reviews used in the drafting of GTR provisions will be posted in the docket.

No. 78, in which minimum brake control actuation forces are specified, with the caveat that a higher force may be used if necessary to activate the ABS. In this case, it was agreed that stipulating minimum brake actuation forces was unnecessary; therefore the first method considered was simply to apply the necessary brake actuation force to activate the ABS. The second method considered specified maximum brake control actuation forces that cannot be exceeded. Unlike the first method, the second method was designed to ensure that all riders would have the benefit of the operation of ABS at or below specified maximum brake actuation forces, under the specified test conditions, and to facilitate verification testing. However, some cautioned that the latter method would also restrict design, which is not a desirable condition.

Although the validation testing did provide important information toward setting maximum brake control actuation forces, there was concern that too few motorcycles were tested to allow setting fixed limits. Therefore, the GTR specifies the first method noted above.

a. ABS Performance Test—Stopping Performance Requirement

An adhesion utilization test is included in the UNECE regulation only, and compares the separate performance of the front and rear ABS brakes to the separate maximum braking performance of the front and rear brakes with the ABS disabled. It is evaluated on two road surfaces, a high-friction surface and a low-friction surface.

Several discussions were held on the issues of test repeatability and variability of the results. The UNECE Regulation No. 78 test has a potential for producing less repeatable results because it is a test of the maximum motorcycle braking performance as achieved by the rider of the motorcycle. Numerous factors come into play when attempting to achieve maximum performance, including rider skill, the condition of the test equipment and site (tires, brakes and track surface), and the weather conditions. For example, the performance of ABS may be favorable when tested by a poorly performing rider; however, the efficiency of ABS can diminish significantly when tested by an expert rider.

In conducting such tests, some ABS efficiency results were noted to exceed 100 percent (*i.e.*, improved deceleration compared to non-ABS braking performance), which can occur when the test rider is not able to achieve the maximum available deceleration rate. In addition to rider influence, we believe that the UNECE Regulation No. 78 procedure is flawed in that it prescribes a constant control force for the entire stop. The available surface friction (*i.e.*, peak braking coefficient, or PBC) increases as the motorcycle speed decreases, and thus the ABS system will have the advantage of higher deceleration rates at lower speeds. Therefore, to obtain the maximum deceleration capability without ABS, it is expected that the rider would have to increase the braking control force as the motorcycle is being decelerated.

Safety and logistical issues were also noted with the UNECE Regulation No. 78 adhesion utilization test:

- *Rider safety*. The test requires that the rider achieve an impending locked-wheel braking condition with the ABS disabled, to obtain maximum deceleration data with which to evaluate ABS in later tests. This impending locked-wheel braking condition is at the beginning of loss-of-control of the motorcycle, which could result in a crash. Even with protective outriggers in place, it is a hazardous condition that is asked of the test rider.
- *Logistical*. The test requires modifying the brake system to disable the ABS. This may not be a simple task, or may not be possible depending on the complexity of the motorcycle brake system. Furthermore, the standard requires that maximum deceleration be recorded with an altered brake system (*i.e.*, with disabled ABS), hence possibly outside the manufacturer's design parameters.

In light of these issues, alternate ABS tests were developed at the fourth informal group meeting in June 2005, based on the UNECE Regulation No. 78. The tests developed consisted of braking on both high- and low-friction surfaces with ABS cycling, but with emphasis placed on maintaining motorcycle stability rather than actual stopping performance. Nevertheless, the tests also specified stopping performance for the high-friction surface test only, based on the minimum performance requirements of the general UNECE Regulation No. 78 dry stop test. The developed tests did not specify a stopping distance performance requirement for the low-friction surface test, as there was no baseline test in UNECE Regulation No. 78 with which to compare it. The tests neither required the brake system to be altered, nor the rider to attempt to obtain the maximum attainable deceleration rate, thereby addressing the safety and logistical issues.

This alternate test was presented at the 58th GRRF in September 2005. While there was no issue raised with regard to the test procedure, the relative stringency of the stopping performance requirements was thought to be too low compared to the existing UNECE Regulation No. 78 ABS requirement, which could result in unnecessarily long stopping distances when ABS is cycling.

The ABS test agreed on for the GTR and proposed here is conducted with all service brake controls actuated simultaneously, whereby brake and stability performance requirements are measured on low- and high-friction surfaces. The benefits of testing all service brake controls simultaneously include being able to compare the motorcycle ABS deceleration performance to the available PBC, without modification of the brake system and without rider influence.

The brake performance requirement is based on the UNECE Regulation No. 78 requirement that braking with the ABS cycling shall meet at least 70 percent of the maximum braking performance without ABS. Regarding stability during the ABS tests, the proposal defines wheel lock as the condition where the wheel attains 100 percent slip, and states in several of the performance requirements of the ABS tests that there must be no wheel lock. We are aware that momentary wheel lock at 100 percent slip may occur during normal cycling of the ABS but note that it is difficult to establish a proposed time frame for such momentary lock-up duration. As a result, for the ABS tests, the regulatory text includes that wheel lock is allowed as long as the stability of the motorcycle is not affected to the extent that it requires the operator to release the control or causes the motorcycle to pass outside the test lane.

Unlike the high-friction surface where measurement of PBC yields consistent results, PBC values can vary on the same low-friction, wetted surface. Given this characteristic, a range of PBC values is necessary for the low-friction ABS tests. Following the ABS validation tests, the proposed specification of a PBC range from 0.3 to 0.45 on a low-friction surface was revised as none of the track surfaces on which the motorcycles were tested fell in this range. The GTR specifies that the track surface have a PBC less than or equal to 0.45, and that the performance requirement is based on 70 percent of the track surface PBC at the time of testing. This is a more stringent requirement than previously considered in the development of the GTR's ABS tests, whereby the performance requirement was based on a PBC of 0.3, even though the motorcycle could be tested on a surface with a PBC of 0.45.

Braking performance in terms of stopping distance and deceleration for individually braked wheels was also considered. Maximum braking performance at each wheel is significantly affected by the motorcycle design. For example, different braking effectiveness is available through the rear wheel of a sport motorcycle compared to that of a cruiser motorcycle. Therefore, it is not possible to set constant maximum stopping distance or deceleration performance requirements for each wheel individually, for all motorcycle types. Given this, and that individual wheel braking performance is already covered in the dry stop test—single brake control actuated test, further testing for individually braked wheels is not considered necessary. In the event of a motorcycle with ABS installed on only one wheel, the test rider can still apply all service brake systems simultaneously as specified to meet the stability and stopping performance requirements.

b. ABS Performance Test—Low-Friction to High-Friction Surface Transition Stop

This is an existing test in UNECE Regulation No. 78, with the performance requirement that the motorcycle does not deviate from its initial course and that its deceleration shall rise to an ''appropriate'' value in a ''reasonable'' time. To make the test more objective, actual performance values were incorporated in the GTR test to define what is appropriate and reasonable.

At the fifth informal meeting in October 2005, Japan presented some preliminary test data that revealed a wide range of ABS performance responses to the sudden change in surface friction. Thus, at that time, it was not possible to determine a specific value that would be required to improve the objectivity of the UNECE test. The subsequent ABS validation tests provided additional insight in this regard, with a view to establishing specific performance requirements. In all cases, a rise in deceleration could be observed in a graphical depiction of the motorcycle deceleration over time, to various degrees. Regarding the response time to the change in surfaces, the actual test surfaces and the methods used to calculate the time interval varied sufficiently to make it difficult to define a time limit on the basis of the testing so far. Based on this data, the GTR introduced a limit of 1.0 seconds in order to match the current UNECE requirement that the deceleration should rise in a ''reasonable time,'' although there was very limited, confirmed technical support for such a figure. It was also agreed that when more data becomes available, these specifications could be reconsidered.

Setting a minimum performance requirement to account for a rise in deceleration proved more difficult. Different criteria were applied to establish a method to objectively quantify changes in the deceleration rates before and after the transition point. Although each criterion yielded a rise in deceleration, the magnitude of the rise in the deceleration varied over time. This variation is related to the operating characteristics of the ABS as it cycles the brakes, which causes the motorcycle to slow at different deceleration rates throughout the stop. For the same motorcycle, ABS cycling can change depending on various factors including the available traction at that time, as interpreted by the hardware and software that comprises the ABS system. These provide sinusoidal-like deceleration signatures, before and after the transition point. As such, there is no a clear point where the deceleration can be shown to have increased. Rather, a segment of the deceleration data shall be analyzed, before and after the transition point, from which trends can be established to compare deceleration rates.

In view of these findings, validation testing has demonstrated a need for further data analysis and possibly the testing of a larger sample of motorcycles to propose performance limits in terms of a minimum deceleration rate. In terms of quantifying a minimum rise in deceleration, the GTR keeps the performance requirement general, by stating that the deceleration shall increase after passing over the transition point.

8. Partial Failure Test—Split Service Brake System

The current FMVSS No. 122 partial failure test remains largely unchanged, except for a change in the terminology of applicability due to the newly proposed motorcycle categories. This is not a substantive change, as current FMVSS No. 122 indicates that the partial service brake system failure test ''do[es] not apply to a motor-driven cycle whose speed attainable in 1 mile is 30 m.p.h. or less,'' and the proposed partial failure test specifications are not applicable to motorcycle categories 3–1 and 3–2. Motorcycle categories 3–1 and 3–2 are motorcycles with a maximum design speed not exceeding 50 km/h (31.1 mph). Thus, the proposed service brake system partial failure test is not substantially different from the current FMVSS No. 122 test.

A motorcycle split service brake system is based on the passenger car brake system. Its use is unique to motorcycles in Canada and the United States. The purpose of this test is to ensure that, in the event of a pressure component leakage failure in one of the hydraulic subsystems, a minimum level of braking performance is still available in the remaining hydraulic subsystem to allow the rider to bring the motorcycle to a stop. FMVSS No. 122 is the only national regulation that addresses a failure test for motorcycles equipped with a split service brake system.

9. Power-Assisted Braking System Failure Test

The current FMVSS No. 122 does not have any performance requirements to test the failure of a power-assisted braking system. The proposed rule would not require power-assisted braking systems but does contain performance requirements for when such brake systems fail, to ensure minimum brake system performance in motorcycles that are so equipped. None of the world's motorcycle brake regulations or standards currently include such a performance requirement, most likely because the application of power-assisted braking systems on motorcycles is relatively new.

The GRRF recognized that some motorcycles are presently equipped with power-assisted braking systems, and that the use of such systems could expand in the future. Existing standards are limited to motor vehicles where this technology has been in use for many years, such as on passenger cars. At present, however, there is no known performance requirement in the event of the failure of a power-assisted braking system on a motorcycle. The GTR therefore specifies a test to ensure that, in the event of a power-assisted braking system failure, a minimum level of braking performance is still available to allow the rider to bring the motorcycle to a stop. Certifying to the performance requirement is not required if the motorcycle is equipped with another separate service brake system that operates without power-assist.

In summary, the proposed test is based on the dry stop test—single brake control actuated (paragraph S6.3 of the proposed FMVSS No. 122), whereby the minimum performance requirement was initially set to that specified for the secondary brake system for motorcycles equipped with CBS. In developing the GTR, some believed this performance requirement was too low. For the revised version of the test, in the case of separate service brake systems, each brake control shall be tested separately and capable of meeting the minimum

brake performance for the single rear brake system. In the case of motorcycles equipped with CBS or a split service brake system, the proposed rule, consistent with the GTR, specifies testing of each brake control separately and the minimum performance requirements are those for the secondary brake system.

*C. Summary of Improvements*

This proposal, if made final, would improve the current FMVSS No. 122 requirements and test procedures in several areas. First, it would make the dry brake test requirement more stringent by specifying testing of each service brake control individually with the motorcycle in the fully loaded condition (''laden''). Second, the proposal would establish a more stringent high speed test requirement by specifying a slightly higher rate of deceleration. Third, the proposal would replace the existing wet brake test with one that better simulates actual in-service conditions, by spraying water onto the brake disc instead of submerging the brake system before testing. Fourth, the proposal would specify an improved heat fade test based on European and Japanese national regulations, which share the same test procedure and performance requirements. Fifth, the proposal would mandate performance requirements for antilock brake systems when motorcycles are so equipped. Finally, the proposal would establish a new power-assisted braking system failure test requirement to evaluate the motorcycle's performance in the event of a failure in the power-assisted braking system, if fitted.

## VI. Benefits, Costs, and the Proposed Compliance Date

Although this proposal would add and update FMVSS No. 122 test procedures, we anticipate that virtually all motorcycles sold in the U.S. can meet the performance requirements as proposed, and thus, there is no measurable safety benefit derived from the proposal. However, NHTSA believes that the proposed performance requirements would help ensure the safety of motorcycle brake systems and thus have a beneficial effect on safety. The proposal includes several tests that would update and enhance performance requirements—tests both at the fully loaded condition (''laden'') and lightly loaded vehicle weight, which ensure adequate braking performance at the two extremes of the loading conditions; a wet brake test that is more representative of the manner in which brakes are wetted during real world riding in wet conditions; a variety of ABS performance tests, for motorcycles so equipped, to ensure adequate antilock performance during emergency braking or on slippery road conditions; and a new test in the event of a failure in the power-assisted braking system, if a motorcycle is so equipped.

Moreover, as mentioned above, motorcycle manufacturers, and ultimately, consumers, both here and abroad, can expect to achieve cost savings through the formal harmonization of differing sets of standards when the Contracting Parties to the 1998 Global Agreement implement the Motorcycle Brake Systems GTR. Harmonization enables motorcycle manufacturers to test their models to just one regulation/series of tests to sell globally.

We believe that although the proposal would add some new requirements to FMVSS No. 122 and replace some test procedures and performance requirements with ones based on more stringent standards used in another national regulation, none of the proposed tests would result in measurable costs to motorcycles. The proposal includes performance requirements that constitute the best practices from various standards and regulations. Some of the tests, such as the wet brake test, the ABS performance requirements, and the tests in the loaded condition, are an upgrade to the existing FMVSS No. 122. But current FMVSS No. 122 does not reflect the advancement of modern braking technologies, and motorcycles sold in the U.S. can virtually all meet the performance requirements as proposed without any major design changes. The agency believes that motorcycles sold in the U.S. market can comply with the requirements of ECE Regulation No. 78 and JSS 12–61 without any modifications, and vice versa. As a result, any costs for design changes by motorcycle manufacturers to comply with the proposed performance requirements are expected to be negligible. Also, additional testing costs to comply with ABS performance requirements, if the motorcycle is equipped with ABS, are expected to be minimal.

The agency has tentatively determined that virtually all of the current motorcycle fleet would comply with the proposal, if made final. Therefore, we are proposing to make the upgraded requirements mandatory at the beginning of the first September that is two full years after the publishing of a final rule. For example, if a final rule is adopted on December 1, 2009, compliance would be mandatory beginning September 1, 2012. Optional early compliance would be permitted on and after 30 days after the date of publication of a final rule in the **Federal Register**.

## VII. U.S. Selection of Options Within the GTR

This NPRM fulfills our obligation to initiate domestic rulemaking to adopt the provisions of the GTR. The NPRM is based on the Motorcycle Brake Systems GTR. Certain provisions of the GTR contain options that Contracting Parties may select from when implementing the GTR into their national regulations. NHTSA's specifications where there are options in the GTR are explained here:

- We propose to specify that peak braking coefficient (PBC) be measured using the ASTM E1136 standard reference test tire, in accordance with ASTM Method E1337–90. In the GTR, the decision was made not to specify the method used to measure the coefficient of friction but leave it to the national regulations to choose which of two test methods enumerated in the GTR should be used to measure PBC.
- We specify in high friction test surface conditions a PBC equal to 0.9 instead of a ''nominal'' PBC of 0.9 to make the proposed test procedures more objective.
- We propose that the initial brake temperature (IBT) be measured by plug-type thermocouples, as opposed to rubbing-type thermocouples. The two methods of measuring the IBT are included in the GTR and each Contracting Party must specify which temperature measurement it will use in its national regulation.
- The GTR includes a requirement stating that the ''brake linings shall not contain asbestos.'' The GTR includes this requirement, which was adopted from UNECE Regulation No. 78, even though no test method or performance measure is included in the GTR to determine that the lining contains no asbestos. None of the brake standards in the Federal motor vehicle safety standards, including FMVSS No. 122, contain any requirement concerning the material of the brake lining. Concerns about asbestos relate to long-term environmental exposure. This is not within the scope of our rulemaking authority. Therefore, this NPRM does not include the proposal stating that ''brake linings shall not contain asbestos.''
- We propose adding a parenthetical to the GTR parking brake test that is present in current FMVSS No. 122 (*see* current S5.6, S7.9; proposed S6.8.3). In 1978, NHTSA amended the FMVSS No.

122 parking brake test, clarifying that the test does not specify that a motorcycle be held on a 30 percent grade for 5 minutes if the limit of traction of its braked wheels is reached on a lower grade so that the motorcycle begins to slide (43 FR 46547, Oct. 10, 1978). This amendment was based on an interpretation the agency provided in response to a petition for exemption by a company whose motorcycle's limit of traction was reached on a 20 percent grade. The amendment had no effect upon the safety of the rule since it was a statement and clarification of an existing agency interpretation. A similar limit-of-traction provision exists with respect to the parking brake system performance requirements for hydraulically braked motorcycles (S5.2.1 of 49 CFR 571.105).

• While most of the current tests in FMVSS No. 122 evaluate performance through stopping distance, the UNECE Regulation No. 78 and JSS 12–61 test methods allow brake performance to be measured through the use of either mean fully developed deceleration or stopping distance. While the GTR specifies performance requirements in reference to the respective national regulation on which the test was based, the performance tests proposed by NHTSA measure performance exclusively in stopping distance where applicable, to enhance enforceability of the Standard as opposed to providing optional performance measures. This is consistent with how performance requirements are stated in other Federal motor vehicle safety standards. This differs from the GTR in that our proposed performance tests do not allow manufacturers a choice to measure performance using either deceleration or stopping distance, but requires measurement of performance using stopping distance only where it is the applicable performance measure.

The Executive Committee of the 1998 Agreement and WP.29 are aware that the U.S. intended to make these choices as allowed in the GTR. We believe that the proposed provisions, if adopted, would improve motorcycle brake systems in the United States.

## VIII. Regulatory Analyses and Notices

### *A. Vehicle Safety Act*

Under 49 U.S.C. Chapter 301, *Motor Vehicle Safety* (49 U.S.C. 30101 *et seq.*), the Secretary of Transportation is responsible for prescribing motor vehicle safety standards that are practicable, meet the need for motor vehicle safety, and are stated in objective terms. 49 U.S.C. 30111(a). When prescribing such standards, the Secretary must consider all relevant, available motor vehicle safety information. 49 U.S.C. 30111(b). The Secretary must also consider whether a proposed standard is reasonable, practicable, and appropriate for the type of motor vehicle or motor vehicle equipment for which it is prescribed and the extent to which the standard will further the statutory purpose of reducing traffic accidents and associated deaths. *Id.* Responsibility for promulgation of Federal motor vehicle safety standards was subsequently delegated to NHTSA. 49 U.S.C. 105 and § 322; delegation of authority at 49 CFR 1.50.

The agency carefully considered these statutory requirements in proposing these amendments to FMVSS No. 122. We believe that the proposed amendments to FMVSS No. 122 are practicable. This document does not propose significant changes to the current performance requirements of FMVSS No. 122. Currently, we believe that all motorcycle brakes will pass the proposed tests. Additionally, if made final, the amendments would harmonize the U.S. requirements with the Motorcycle Brake Systems Global Technical Regulation.

We believe that this proposed rule would be appropriate for the vehicles subject to the performance requirements. If adopted, the proposal would continue to exclude motorcycles for which the requirements and test procedures are impractical or unnecessary (*e.g.*, low-speed motorcycles, categories 3–1 and 3–2, continue to be excluded from the heat fade test).

Finally, the agency has tentatively concluded that the proposed amendments would provide objective procedures for determining compliance. The proposed test procedures have been evaluated by the agency, and we have tentatively concluded that they help achieve repeatable and reproducible results. Further, we are proposing test procedures to provide improved objectivity to existing performance requirements.

### *B. Executive Order 12866 and DOT Regulatory Policies and Procedures*

NHTSA has considered the impacts of this rulemaking action under Executive Order 12866 and the Department of Transportation's related policies and procedures. This rulemaking document was not reviewed by the Office of Management and Budget under E.O. 12866. It is not considered to be significant under the Department's Regulatory Policies and Procedures (44 FR 11034, Feb. 26, 1979). This document proposes test procedures and performance requirements that would impose minimal additional costs on manufacturers, and is not expected to require design changes to current motorcycles. Given the minimal impacts of the proposed rule, we have not prepared a full regulatory evaluation.

NHTSA does not anticipate direct safety benefits from this proposed rule. However, NHTSA believes that the proposed performance requirements would help ensure the safety of motorcycle brake systems and thus have a beneficial effect on safety.

### *C. Executive Order 13132 (Federalism)*

Executive Order 13132 requires NHTSA to develop an accountable process to ensure ''meaningful and timely input by State and local officials in the development of regulatory policies that have federalism implications.'' ''Policies that have federalism implications'' is defined in the Executive Order to include regulations that have ''substantial direct effects on the States, on the relationship between the national government and the States, or on the distribution of power and responsibilities among the various levels of government.'' Under Executive Order 13132, the agency may not issue a regulation with Federalism implications, that imposes substantial direct compliance costs, and that is not required by statute, unless the Federal government provides the funds necessary to pay the direct compliance costs incurred by State and local governments, the agency consults with State and local governments, or the agency consults with State and local officials early in the process of developing the proposed regulation. NHTSA also may not issue a regulation with Federalism implications and that preempts State law unless the agency consults with State and local officials early in the process of developing the proposed regulation.

NHTSA has examined today's proposal pursuant to E.O. 13132 and concluded that no additional consultation with States, local governments or their representatives is mandated beyond the rulemaking process. The agency has concluded that the proposal does not have federalism implications because the rule does not have ''substantial direct effects on the States, on the relationship between the national government and the States, or on the distribution of power and responsibilities among the various levels of government.''

Further, no consultation is needed to discuss the preemptive effect of this NPRM. NHTSA rules can have

preemptive effect in at least two ways. First, the National Traffic and Motor Vehicle Safety Act contains an express preemption provision: ''When a motor vehicle safety standard is in effect under this chapter, a State or a political subdivision of a State may prescribe or continue in effect a standard applicable to the same aspect of performance of a motor vehicle or motor vehicle equipment only if the standard is identical to the standard prescribed under this chapter.'' 49 U.S.C. 30103(b)(1). It is this statutory command that preempts State law, not today's rulemaking, so consultation would be inappropriate.

Second, in addition to the express preemption noted above, the Supreme Court has recognized that State requirements imposed on motor vehicle manufacturers, including sanctions imposed by State tort law, can stand as an obstacle to the accomplishment and execution of a NHTSA safety standard. When such a conflict is discerned, the Supremacy Clause of the Constitution makes the State requirements unenforceable. *See Geier* v. *American Honda Motor Co.*, 529 U.S. 861 (2000). NHTSA has not discerned any potential State requirements in connection with the proposed rule, however, in part because such conflicts can arise in varied contexts. We cannot completely rule out the possibility that, if the proposal is adopted as a final rule, such a conflict might become apparent in the future through subsequent experience with the standard. NHTSA may opine on such conflicts in the future, if warranted.

*D. Executive Order 13045*

Executive Order 13045 (62 FR 19885, April 23, 1997) applies to any rulemaking that: (1) Is determined to be ''economically significant'' as defined under E.O. 12866, and (2) concerns an environmental, health or safety risk that NHTSA has reason to believe may have a disproportionate effect on children. If the regulatory action meets both criteria, we must evaluate the environmental health or safety effects of the planned rule on children, and explain why the planned regulation is preferable to other potentially effective and reasonably feasible alternatives considered by us.

This rulemaking is not subject to the Executive Order because it is not economically significant as defined in E.O. 12866. It also does not involve decisions based on health risks that disproportionately affect children.

*E. Executive Order 12988 (Civil Justice Reform)*

With respect to the review of the promulgation of a new regulation, section 3(b) of Executive Order 12988, ''Civil Justice Reform'' (61 FR 4729, February 7, 1996), requires that Executive agencies make every reasonable effort to ensure that the regulation: (1) Specifies in clear language the preemptive effect; (2) specifies in clear language the effect on existing Federal law or regulation, including all provisions repealed, circumscribed, displaced, impaired, or modified; (3) provides a clear legal standard for affected conduct rather than a general standard, while promoting simplification and burden reduction; (4) specifies in clear language the retroactive effect; (5) specifies whether administrative proceedings are to be required before parties may file suit in court; (6) explicitly or implicitly defines key terms; and (7) addresses other important issues affecting clarity and general draftsmanship of regulations. This document is consistent with that requirement.

Pursuant to this Order, NHTSA notes as follows. The preemptive effect of this proposed rule is discussed above. NHTSA notes further that there is no requirement that individuals submit a petition for reconsideration or pursue other administrative proceeding before they may file suit in court.

*F. Regulatory Flexibility Act*

Pursuant to the Regulatory Flexibility Act (5 U.S.C. 601 *et seq.*, as amended by the Small Business Regulatory Enforcement Fairness Act (SBREFA) of 1996) whenever an agency is required to publish a notice of rulemaking for any proposed or final rule, it must prepare and make available for public comment a regulatory flexibility analysis that describes the effect of the rule on small entities (*i.e.*, small businesses, small organizations, and small governmental jurisdictions). However, no regulatory flexibility analysis is required if the head of an agency certifies the rule would not have a significant economic impact on a substantial number of small entities. The SBREFA amended the Regulatory Flexibility Act to require Federal agencies to provide a statement of the factual basis for certifying that a rule would not have a significant economic impact on a substantial number of small entities.

We have considered the effects of this rulemaking action under the Regulatory Flexibility Act (5 U.S.C. 601 *et seq.*) and certify that this proposal would not have a significant economic impact on a substantial number of small entities. The agency is not currently aware of any motorcycle manufacturer that is considered a small business. The brake systems installed on motorcycles are typically developed by one of the major brake component suppliers, which are independent companies. There are cases where the motorcycle manufacturer may perform some of the brake system design and development in-house, and have the system components manufactured by an outside supplier. NHTSA does not consider any of these businesses to be small business entities that would be significantly economically impacted by this rulemaking.

*G. National Environmental Policy Act*

We have analyzed this proposed amendment for the purposes of the National Environmental Policy Act and determined that it would not have any significant impact on the quality of the human environment.

*H. Paperwork Reduction Act*

Under the Paperwork Reduction Act of 1995, a person is not required to respond to a collection of information by a Federal agency unless the collection displays a valid Office of Management and Budget (OMB) control number. The proposed rule does not contain any new information collection requirements.

*I. National Technology Transfer and Advancement Act*

Section 12(d) of the National Technology Transfer and Advancement Act of 1995 (NTTAA) (Pub. L. 104–113; 15 U.S.C. 272) directs us to use voluntary consensus standards in regulatory activities unless doing so would be inconsistent with applicable law or otherwise impractical. Voluntary consensus standards are technical standards (*e.g.*, materials specifications, test methods, sampling procedures, and business practices) that are developed or adopted by voluntary consensus standards bodies, such as the Society of Automotive Engineers (SAE) and the American Society for Testing and Materials (ASTM). The NTTAA directs us to provide Congress, through OMB, explanations when we decide not to use available and applicable voluntary consensus standards.

ASTM E1136, *Standard Specification for a Radial Standard Reference Test Tire*, and ASTM Method E1337–90, *Standard Test Method for Determining Longitudinal Peak Braking Coefficient of Paved Surfaces Using a Standard Reference Test Tire*, are incorporated by reference in the regulatory text. This is

consistent with the NTTAA because these are industry voluntary consensus standards. NHTSA notes that the above ASTM standards are approved for incorporation by reference under 571.500, *Low-speed vehicles*.

*J. Unfunded Mandates Reform Act*

Section 202 of the Unfunded Mandates Reform Act of 1995 (UMRA) requires Federal agencies to prepare a written assessment of the costs, benefits and other effects of proposed or final rules that include a Federal mandate likely to result in the expenditure by State, local or tribal governments, in the aggregate, or by the private sector, of more than $100 million in any one year (adjusted for inflation with base year of 1995). Before promulgating a NHTSA rule for which a written statement is needed, section 205 of the UMRA generally requires us to identify and consider a reasonable number of regulatory alternatives and adopt the least costly, most cost-effective or least burdensome alternative that achieves the objectives of the rule. The provisions of section 205 do not apply when they are inconsistent with applicable law. Moreover, section 205 allows us to adopt an alternative other than the least costly, most cost-effective or least burdensome alternative if we publish with the final rule an explanation why that alternative was not adopted.

The proposed rule would not impose any unfunded mandates under the Unfunded Mandates Reform Act of 1995. This rulemaking does not meet the definition of a Federal mandate because it would not result in costs of $100 million or more to either State, local, or tribal governments, in the aggregate, or to the private sector. Thus, this rulemaking is not subject to the requirements of sections 202 and 205 of the UMRA.

*K. Plain Language*

Executive Order 12866 requires each agency to write all rules in plain language. Application of the principles of plain language includes consideration of the following questions:

- Have we organized the material to suit the public's needs?
- Are the requirements in the rule clearly stated?
- Does the rule contain technical language or jargon that isn't clear?
- Would a different format (grouping and order of sections, use of headings, paragraphing) make the rule easier to understand?
- Would more (but shorter) sections be better?
- Could we improve clarity by adding tables, lists, or diagrams?
- What else could we do to make the rule easier to understand?

If you have any responses to these questions, please include them in your comments on this proposal.

*L. Regulation Identifier Number (RIN)*

The Department of Transportation assigns a regulation identifier number (RIN) to each regulatory action listed in the Unified Agenda of Federal Regulations. The Regulatory Information Service Center publishes the Unified Agenda in April and October of each year. You may use the RIN contained in the heading at the beginning of this document to find this action in the Unified Agenda.

*M. Privacy Act*

Anyone is able to search the electronic form of all comments received into any of our dockets by the name of the individual submitting the comment (or signing the comment, if submitted on behalf of an association, business, labor union, etc.). You may review DOT's complete Privacy Act Statement in the **Federal Register** published on April 11, 2000 (65 FR 19477 at 19478).

## IX. Public Participation

*How do I prepare and submit comments?*

Your comments must be written and in English. To ensure that your comments are correctly filed in the Docket, please include the docket number of this document in your comments.

Your comments must not be more than 15 pages long. (49 CFR 553.21). We established this limit to encourage you to write your primary comments in a concise fashion. However, you may attach necessary additional documents to your comments. There is no limit on the length of the attachments.

Please submit two copies of your comments, including the attachments, to the Docket Management Facility at the address given above under **ADDRESSES**.

Comments may also be submitted to the docket electronically by logging onto the Federal eRulemaking Portal Web site at *http://www.regulations.gov*. Follow the online instructions for submitting comments.

Please note that pursuant to the Data Quality Act, in order for substantive data to be relied upon and used by the agency, it must meet the information quality standards set forth in the OMB and DOT Data Quality Act guidelines. Accordingly, we encourage you to consult the guidelines in preparing your comments. OMB's guidelines may be accessed at *http://www.whitehouse.gov/omb/fedreg/reproducible.html*. DOT's guidelines may be accessed at *http://dmses.dot.gov/submit/DataQualityGuidelines.pdf*.

*How can I be sure that my comments were received?*

If you wish Docket Management to notify you upon its receipt of your comments, enclose a self-addressed, stamped postcard in the envelope containing your comments. Upon receiving your comments, Docket Management will return the postcard by mail.

*How do I submit confidential business information?*

If you wish to submit any information under a claim of confidentiality, you should submit three copies of your complete submission, including the information you claim to be confidential business information, to the Chief Counsel, NHTSA, at the address given above under **FOR FURTHER INFORMATION CONTACT**. In addition, you should submit two copies, from which you have deleted the claimed confidential business information, to the Docket Management Facility at the address given above under **ADDRESSES**. When you send a comment containing information claimed to be confidential business information, you should include a cover letter setting forth the information specified in our confidential business information regulation. (49 CFR Part 512.)

*Will the agency consider late comments?*

We will consider all comments that Docket Management receives before the close of business on the comment closing date indicated above under **DATES**. To the extent possible, we will also consider comments that Docket Management receives after that date. If Docket Management receives a comment too late for us to consider it in developing a final rule (assuming that one is issued), we will consider that comment as an informal suggestion for future rulemaking action.

*How can I read the comments submitted by other people?*

You may read the comments received by Docket Management at the address given above under **ADDRESSES**. The hours of the Docket are indicated above in the same location. You may also see the comments on the Internet. To read the comments on the Internet, go to

*http://www.regulations.gov*. Follow the online instructions for accessing the dockets.

Please note that even after the comment closing date, we will continue to file relevant information in the Docket as it becomes available. Further, some people may submit late comments. Accordingly, we recommend that you periodically check the Docket for new material.

**List of Subjects in 49 CFR Part 571**

Motor vehicle safety, Reporting and record keeping requirements, Tires.

In consideration of the foregoing, NHTSA proposes to amend 49 CFR 571 as follows:

## PART 571—FEDERAL MOTOR VEHICLE SAFETY STANDARDS

1. The authority citation for Part 571 continues to read as follows:

**Authority:** 49 U.S.C. 322, 30111, 30115, 30117 and 30166; delegation of authority at 49 CFR 1.50.

2. Section 571.122 is revised to read as follows:

### § 571.122 Standard No. 122; Motorcycle brake systems.

S1. *Scope*. This standard specifies requirements for motorcycle service brake systems and, where applicable, associated parking brake systems.

S2. *Purpose*. The purpose of the standard is to ensure safe motorcycle braking performance under normal and emergency riding conditions.

S3. *Application*. This standard applies to motorcycles.

S4. *Definitions*.

*Antilock brake system* or *ABS* means a system which senses wheel slip and automatically modulates the pressure producing the braking forces at the wheel(s) to limit the degree of wheel slip.

*Baseline test* means a stop or a series of stops carried out in order to confirm the performance of the brake prior to subjecting it to a further test such as the heating procedure or wet brake stop.

*Brake* means those parts of the brake system where the forces opposing the movement of the motorcycle are developed.

*Brake system* means the combination of parts consisting of the control, transmission, and brake, but excluding the engine, whose function it is to progressively reduce the speed of a moving motorcycle, bring it to a halt, and keep it stationary when halted.

*Category 3–1 motorcycle* means a two-wheeled motorcycle with an engine cylinder capacity in the case of a thermic engine not exceeding 50 $cm^3$ and whatever the means of propulsion a maximum design speed not exceeding 50 km/h.

*Category 3–2 motorcycle* means a three-wheeled motorcycle of any wheel arrangement with an engine cylinder capacity in the case of a thermic engine not exceeding 50 $cm^3$ and whatever the means of propulsion a maximum design speed not exceeding 50 km/h.

*Category 3–3 motorcycle* means a two-wheeled motorcycle with an engine cylinder capacity in the case of a thermic engine exceeding 50 $cm^3$ or whatever the means of propulsion a maximum design speed exceeding 50 km/h.

*Category 3–4 motorcycle* means a motorcycle manufactured with three wheels asymmetrically arranged in relation to the longitudinal median plane with an engine cylinder capacity in the case of a thermic engine exceeding 50 $cm^3$ or whatever the means of propulsion a maximum design speed exceeding 50 km/h. (This category definition is intended to include motorcycles with sidecars.)

*Category 3–5 motorcycle* means a motorcycle manufactured with three wheels symmetrically arranged in relation to the longitudinal median plane with an engine cylinder capacity in the case of a thermic engine exceeding 50 $cm^3$ or whatever the means of propulsion a maximum design speed exceeding 50 km/h.

*Combined brake system or CBS means:*

(a) For motorcycle categories 3–1 and 3–3: a service brake system where at least two brakes on different wheels are actuated by the operation of a single control.

(b) For motorcycle categories 3–2 and 3–5: a service brake system where the brakes on all wheels are actuated by the operation of a single control.

(c) For motorcycle category 3–4: a service brake system where the brakes on at least the front and rear wheels are actuated by the operation of a single control. (If the rear wheel and the asymmetrical wheel are braked by the same brake system, this is regarded as the rear brake.)

*Control* means the part actuated directly by the rider in order to supply or control the energy required for braking the motorcycle to the transmission.

*Driver mass* means the nominal mass of a driver that equals 75 kg (68 kg occupant mass plus 7 kg of luggage mass).

*Engine disconnected* means when the engine is no longer connected to the driving wheel(s).

*Gross vehicle mass* means the maximum mass of the fully laden solo vehicle, based on its construction and design performances, as declared by the manufacturer.

*Initial brake temperature* means the temperature of the hottest brake before any brake application.

*Laden* means the gross vehicle mass.

*Lightly loaded* means mass in running order plus 15 kg for test equipment, or the laden condition, whichever is less. In the case of ABS tests on a low friction surface (paragraphs 4.9.4. to 4.9.7.), the mass for test equipment is increased to 30 kg to account for outriggers.

*Mass in running order* means the sum of unladen vehicle mass and driver mass.

*Peak braking coefficient* or *PBC* means the measure of tire-to-road surface friction based on the maximum deceleration of a rolling tire.

*Power-assisted braking system* means a brake system in which the energy necessary to produce the braking force is supplied by the physical effort of the rider assisted by one or more energy supplying devices, for example vacuum assisted (with vacuum booster).

*Secondary brake system* means the second service brake system on a motorcycle equipped with a combined brake system.

*Service brake system* means a brake system which is used for slowing the motorcycle when in motion.

*Sidecar* means a one-wheeled vehicle that is attached to the side of a motorcycle.

*Single brake system* means a brake system which acts on only one axle.

*Split service brake system* or *SSBS* means a brake system that operates the brakes on all wheels, consisting of two or more subsystems actuated by a single control designed so that a single failure in any subsystem (such as a leakage type failure of a hydraulic subsystem) does not impair the operation of any other subsystem.

*Stopping distance* means the distance traveled by the motorcycle from the point the rider begins to actuate the brake control to the point at which the motorcycle reaches full stop. For tests where simultaneous actuation of two controls is specified, the distance traveled is taken from the point the first control is actuated.

*Test speed* means the motorcycle speed measured the moment the rider begins to actuate the brake control. For tests where simultaneous actuation of two controls is specified, the motorcycle speed is taken from the moment the first control is actuated.

*Transmission* means the combination of components that provide the

functional link between the control and the brake.

*Unladen vehicle mass* means the nominal mass of a complete vehicle as determined by the following criteria:

(a) Mass of the vehicle with bodywork and all factory fitted equipment, electrical and auxiliary equipment for normal operation of vehicle, including liquids, tools, fire extinguisher, standard spare parts, chocks and spare wheel, if fitted.

(b) The fuel tanks filled to at least 90 percent of rated capacity and the other liquid containing systems (except those for used water) to 100 percent of the capacity specified by the manufacturer.

*Vmax* means either the speed attainable by accelerating at a maximum rate from a standing start for a distance of 1.6 km on a level surface, with the vehicle lightly loaded, or the speed measured in accordance with International Organization for Standardization (ISO) 7117:1995.

*Wheel lock* means the condition that occurs when there is 100 percent wheel slip.

S5. *General requirements.*

S5.1 *Brake system requirements.* Each motorcycle shall meet each of the test requirements specified for a motorcycle of its type and for those brake features on the motorcycle.

S5.1.1 *Service brake system control operation.* Each motorcycle shall have a configuration that enables a rider to actuate the service brake system control while seated in the normal driving position and with both hands on the steering control.

S5.1.2 *Secondary brake system control operation.* Each motorcycle shall have a configuration that enables a rider to actuate the secondary brake system control while seated in the normal driving position and with at least one hand on the steering control.

S5.1.3 *Parking brake system.*

(a) If a parking brake system is fitted, it shall hold the motorcycle stationary on the slope prescribed in S6.8.2. The parking brake system shall:

(1) have a control which is separate from the service brake system controls; and

(2) be held in the locked position by solely mechanical means.

(b) Each motorcycle equipped with a parking brake shall have a configuration that enables a rider to be able to actuate the parking brake system while seated in the normal driving position.

S5.1.4 *Two-wheeled motorcycles of categories 3–1 and 3–3.* Each category 3–1 and 3–3 two-wheeled motorcycle shall be equipped with either two separate service brake systems, or a split service brake system, with at least one brake operating on the front wheel and at least one brake operating on the rear wheel.

S5.1.5 *Three-wheeled motorcycles of category 3–4.* Each category 3–4 motorcycle shall comply with the brake system requirements in S5.1.4. A brake on the asymmetric wheel (with respect to the longitudinal axis) is not required.

S5.1.6 *Three-wheeled motorcycles of category 3–2.* Each category 3–2 motorcycle shall be equipped with a parking brake system plus one of the following service brake systems:

(a) two separate service brake systems, except CBS, which, when applied together, operate the brakes on all wheels; or

(b) a split service brake system; or

(c) a CBS that operates the brake on all wheels and a secondary brake system which may be the parking brake system.

S5.1.7 *Three-wheeled motorcycles of categories 3–5.* Each category 3–5 motorcycle shall be equipped with:

(a) a parking brake system; and

(b) a foot actuated service brake system which operates the brakes on all wheels by way of either:

(1) a split service brake system; or

(2) a CBS and a secondary brake system, which may be the parking brake system.

S5.1.8 *Two separate service brake systems.* For motorcycles where two separate service brake systems are installed, the systems may share a common brake, if a failure in one system does not affect the performance of the other.

S5.1.9 *Hydraulic service brake system.* For motorcycles that use hydraulic fluid for brake force transmission, the master cylinder shall:

(a) have a sealed, covered, separate reservoir for each brake system; and

(b) have a minimum reservoir capacity equivalent to 1.5 times the total fluid displacement required to satisfy the new to fully worn lining condition with the worst case brake adjustment conditions; and

(c) have a reservoir where the fluid level is visible for checking without removal of the cover.

S5.1.10 *Warning lamps.* All warning lamps shall be mounted in the rider's view.

S5.1.10.1 *Split service brake system warning lamps.*

(a) Each motorcycle that that is equipped with a split service brake system shall be fitted with a red warning lamp, which shall be activated:

(1) When there is a hydraulic failure on the application of a force of ≤ 90 N on the control; or

(2) without actuation of the brake control, when the brake fluid level in the master cylinder reservoir falls below the greater of:

(i) that which is specified by the manufacturer; and

(ii) that which is less than or equal to half of the fluid reservoir capacity.

(b) To permit function checking, the warning lamp shall be illuminated by the activation of the ignition switch and shall be extinguished when the check has been completed. The warning lamp shall remain on while a failure condition exists whenever the ignition switch is in the ''on'' position.

S5.1.10.2 *Antilock brake system warning lamps.* Each motorcycle equipped with an ABS system shall be fitted with a yellow warning lamp. The lamp shall be activated whenever there is a malfunction that affects the generation or transmission of signals in the motorcycle's ABS system. To permit function checking, the warning lamp shall be illuminated by the activation of the ignition switch and extinguished when the check has been completed. The warning lamp shall remain on while a failure condition exists whenever the ignition switch is in the ''on'' position.

S5.2 *Durability.*

S5.2.1 *Compensation for wear.* Wear of the brakes shall be compensated for by means of a system of automatic or manual adjustment.

S5.2.2 *Notice of wear.* The friction material thickness shall either be visible without disassembly, or where the friction material is not visible, wear shall be assessed by means of a device designed for that purpose.

S5.2.3 *Testing.* During all the tests in this standard and on their completion, there shall be no friction material detachment and no leakage of brake fluid.

S5.3 *Measurement of dynamic performance.* There are two ways in which brake system performance is measured. The particular method to be used is specified in the respective tests in S6.

S5.3.1 *Stopping distance.*

(a) Based on the basic equations of motion: $S = 0.1 \cdot V + (X) \cdot V^2$,

Where:

S = stopping distance in meters
V = initial vehicle speed in km/h
X = a variable based on the requirement for each test

(b) To calculate the corrected stopping distance using the actual vehicle test speed, the following formula is used: $Ss = 0.1 \cdot Vs + (Sa - 0.1 \cdot Va) \cdot Vs^2 / Va^2$,

Where:

Ss = corrected stopping distance in meters
Vs = specified vehicle test speed in km/h
Sa = actual stopping distance in meters
Va = actual vehicle test speed in km/h

**Note to S5.3.1(b):** This equation is only valid when the actual test speed (Va) is within ± 5 km/h of the specified test speed (Vs).

S5.3.2 *Continuous deceleration recording.* The other method used to measure performance is the continuous recording of the vehicle instantaneous deceleration from the moment a force is applied to the brake control until the end of the stop.

S6. *Test conditions, procedures and performance requirements.*

S6.1 *General.*

S6.1.1 *Test surfaces.*

S6.1.1.1 *High friction surface.* A high friction surface is used for all dynamic brake tests excluding the ABS tests where a low-friction surface is specified. The high-friction surface test area is a clean, dry and level surface, with a gradient of ≤ 1 percent. The high-friction surface has a peak braking coefficient (PBC) of 0.9.

S6.1.1.2 *Low-friction surface.* A low-friction surface is used for ABS tests where a low-friction surface is specified. The low-friction surface test area is a clean and level surface, with a gradient of ≤ 1 percent. The low-friction surface has a PBC of ≤ 0.45.

S6.1.1.3 *Measurement of PBC.* The PBC is measured using the American Society for Testing and Materials (ASTM) E1136–93 (Reapproved 2003) standard reference test tire, in accordance with ASTM Method E1337–90 (Reapproved 2002), at a speed of 40 mph without water delivery.

S6.1.1.4 *Parking brake system tests.* The specified test slope has a clean and dry surface that does not deform under the weight of the motorcycle.

S6.1.1.5 *Test lane width.* For two-wheeled motorcycles (motorcycle categories 3–1 and 3–3) the test lane width is 2.5 meters. For three-wheeled motorcycles (motorcycle categories 3–2, 3–4 and 3–5) the test lane width is 2.5 meters plus the vehicle width.

S6.1.2 *Ambient temperature.* The ambient temperature is between 4 °C and 45 °C.

S6.1.3 *Wind speed.* The wind speed is not more than 5 m/s.

S6.1.4 *Test speed tolerance.* The test speed tolerance is ± 5 km/h. In the event of the actual test speed deviating from the specified test speed (but within the ± 5 km/h tolerance), the actual stopping distance is corrected using the formula in S5.3.2(b).

S6.1.5 *Automatic transmission.* Motorcycles with automatic transmission shall meet all test requirements—whether they are for ''engine connected'' or ''engine disconnected.'' If an automatic transmission has a neutral position, the neutral position is selected for tests where ''engine disconnected'' is specified.

S6.1.6 *Vehicle position and wheel lock.* The vehicle is positioned in the center of the test lane for the beginning of each stop. Stops are made without the vehicle wheels passing outside the applicable test lane and without wheel lock.

S6.1.7 *Test sequence.* Test sequence is as specified in Table 1.

S6.2 *Preparation.*

S6.2.1 *Engine idle speed.* The engine idle speed is set to the manufacturer's specification.

S6.2.2 *Tire pressures.* The tires are inflated to the manufacturer's specification for the vehicle loading condition for the test.

S6.2.3 *Control application points and direction.* For a hand control lever, the input force (F) is applied on the control lever's forward surface perpendicular to the axis of the lever fulcrum and its outermost point on the plane along which the control lever rotates (see Figure 1). The input force is applied to a point located 50 millimeters (mm) from the outermost point of the control lever, measured along the axis between the central axis of the fulcrum of the lever and its outermost point. For a foot control pedal, the input force is applied to the center of, and at right angles to, the control pedal.

S6.2.4 *Brake temperature measurement.* The brake temperature is measured on the approximate center of the facing length and width of the most heavily loaded shoe or disc pad, one per brake, using a plug-type thermocouple that is embedded in the friction material, as shown in Figure 2.

S6.2.5 *Burnishing procedure.* The vehicle brakes are burnished prior to evaluating performance.

S6.2.5.1 *Vehicle condition.*

(a) Vehicle lightly loaded.

(b) Engine disconnected.

S6.2.5.2 *Conditions and procedure.*

(a) *Initial brake temperature.* Initial brake temperature before each brake application is ≤ 100 °C.

(b) *Test speed.*

(1) Initial speed: 50 km/h or 0.8 Vmax, whichever is lower.

(2) Final speed = 5 to 10 km/h.

(c) *Brake application.* Each service brake system control actuated separately.

(d) *Vehicle deceleration.*

(1) Single front brake system only:

(i) 3.0–3.5 m/s$^2$ for motorcycle categories 3–3 and 3–5

(ii) 1.5–2.0 m/s$^2$ for motorcycle categories 3–1 and 3–2

(2) Single rear brake system only: 1.5–2.0 m/s$^2$

(3) CBS or split service brake system: 3.5–4.0 m/s$^2$

(e) *Number of decelerations.* There shall be 100 decelerations per brake system.

(f) For the first stop, accelerate the vehicle to the initial speed and then actuate the brake control under the conditions specified until the final speed is reached. Then reaccelerate to the initial speed and maintain that speed until the brake temperature falls to the specified initial value. When these conditions are met, reapply the brake as specified. Repeat this procedure for the number of specified decelerations. After burnishing, adjust the brakes in accordance with the manufacturer's recommendations.

S6.3 *Dry stop test—single brake control actuated.*

S6.3.1 *Vehicle condition.*

(a) The test is applicable to all motorcycle categories.

(b) Laden. For vehicles fitted with CBS and split service brake system, the vehicle is tested in the lightly loaded condition in addition to the laden condition.

(c) Engine disconnected.

S6.3.2 *Test conditions and procedure.*

(a) *Initial brake temperature.* Initial brake temperature is ≥ 55 °C and ≤ 100 °C.

(b) *Test speed.*

(1) Motorcycle categories 3–1 and 3–2: 40 km/h or 0.9 Vmax, whichever is lower.

(2) Motorcycle categories 3–3, 3–4 and 3–5: 60 km/h or 0.9 Vmax, whichever is lower.

(c) *Brake application.* Each service brake system control actuated separately.

(d) *Brake actuation force.*

(1) Hand control: ≤ 200 N.

(2) Foot control:

(i) ≤ 350 N for motorcycle categories 3–1, 3–2, 3–3 and 3–5.

(ii) ≤ for motorcycle category 3–4.

(e) Number of stops: until the vehicle meets the performance requirements, with a maximum of 6 stops.

(f) For each stop, accelerate the vehicle to the test speed and then actuate the brake control under the conditions specified in this paragraph.

S6.3.3 *Performance requirements.* When the brakes are tested in accordance with the test procedure set out in paragraph S6.3.2., the stopping distance shall be as specified in column 2 of Table 2.

S6.4 *Dry stop test—all service brake controls actuated.*

S6.4.1 *Vehicle condition.*

(a) The test is applicable to motorcycle categories 3–3, 3–4 and 3–5.

(b) Lightly loaded.

(c) Engine disconnected.

S6.4.2 *Test conditions and procedure.*

(a) *Initial brake temperature.* Initial brake temperature is ≥ 55 °C and ≤ 100 °C.

(b) *Test speed.* Test speed is 100 km/h or 0.9 Vmax, whichever is lower.

(c) *Brake application.* Simultaneous actuation of both service brake system controls, if so equipped, or of the single service brake system control in the case of a service brake system that operates on all wheels.

(d) *Brake actuation force.*

(1) Hand control: ≤ 250 N.

(2) Foot control:

(i) ≤ 400 N for motorcycle categories 3–3 and 3–5.

(ii) ≤ 500 N for motorcycle category 3–4.

(e) Number of stops: until the vehicle meets the performance requirements, with a maximum of 6 stops.

(f) For each stop, accelerate the vehicle to the test speed and then actuate the brake control under the conditions specified in this paragraph.

S6.4.3 *Performance requirements.* When the brakes are tested in accordance with the test procedure set out in paragraph S6.4.2., the stopping distance (S) shall be $S \leq 0.0060\ V^2$ (where V is the specified test speed in km/h and S is the required stopping distance in meters).

S6.5 *High speed test.*

S6.5.1 *Vehicle condition.*

(a) The test is applicable to motorcycle categories 3–3, 3–4 and 3–5.

(b) Test is not required for vehicles with Vmax ≤ 125 km/h.

(c) Lightly loaded.

(d) Engine connected with the transmission in the highest gear.

S6.5.2 *Test conditions and procedure.*

(a) *Initial brake temperature.* Initial brake temperature is ≥ 55 °C and ≥ 100 °C.

(b) *Test speed.*

(1) Test speed is 0.8 Vmax for motorcycles with Vmax > 125 km/h and < 200 km/h.

(2) Test speed is 160 km/h for motorcycles with Vmax ≥ 200 km/h.

(c) *Brake application.* Simultaneous actuation of both service brake system controls, if so equipped, or of the single service brake system control in the case of a service brake system that operates on all wheels.

(d) *Brake actuation force.*

(1) Hand control: ≤ 200 N.

(2) Foot control:

(i) ≤ 350 N for motorcycle categories 3–3 and 3–5.

(ii) ≤ 500 N for motorcycle category 3–4.

(e) Number of stops: until the vehicle meets the performance requirements, with a maximum of 6 stops.

(f) For each stop, accelerate the vehicle to the test speed and then actuate the brake control(s) under the conditions specified in this paragraph.

S6.5.3 *Performance requirements.* When the brakes are tested in accordance with the test procedure set out in paragraph S6.5.2, the stopping distance (S) shall be $\leq 0.1\ V + 0.0067\ V^2$ (where V is the specified test speed in km/h and S is the required stopping distance in meters).

S6.6 *Wet brake test.*

S6.6.1 *General information.*

(a) The test is comprised of two parts that are carried out consecutively for each brake system:

(1) A baseline test based on the dry stop test—single brake control actuated (S6.3).

(2) A single wet brake stop using the same test parameters as in (1), but with the brake(s) being continuously sprayed with water while the test is conducted in order to measure the brakes' performance in wet conditions.

(b) The test is not applicable to parking brake systems unless it is the secondary brake.

(c) Drum brakes or fully enclosed disc brakes are excluded from this test unless ventilation or open inspection ports are present.

(d) This test requires the vehicle to be fitted with instrumentation that gives a continuous recording of brake control force and vehicle deceleration.

S6.6.2 *Vehicle condition.*

(a) The test is applicable to all motorcycle categories.

(b) Laden. For vehicles fitted with CBS and split service brake systems, the vehicle is tested in the lightly loaded condition in addition to the laden condition.

(c) Engine disconnected.

(d) Each brake is fitted with water spray equipment as shown in Figure 3.

(1) *Disc brakes—sketch of water spray equipment.* The disc brake water spray equipment is installed as follows:

(i) Water is sprayed onto each brake with a flow rate of 15 liters/hr. The water is equally distributed on each side of the rotor.

(ii) If the surface of the rotor has any shielding, the spray is applied 45° prior to the shield.

(iii) If it is not possible to locate the spray in the position shown on the sketch, or if the spray coincides with a brake ventilation hole or similar, the spray nozzle may be advanced by an additional 90° maximum from the edge of the pad, using the same radius.

(2) *Drum brakes with ventilation and open inspection ports.* The water spray equipment is installed as follows:

(i) Water is sprayed equally onto both sides of the drum brake assembly (on the stationary back plate and on the rotating drum) with a flow rate of 15 liters/hr.

(ii) The spray nozzles are positioned two-thirds of the distance from the outer circumference of the rotating drum to the wheel hub center.

(iii) The nozzle position is > 15° from the edge of any opening in the drum back plate.

S6.6.3 *Baseline test—test conditions and procedure.*

(a) The test in paragraph S6.3 (dry stop test—single brake control actuated) is carried out for each brake system but with the brake control force that results in a vehicle deceleration of 2.5–3.0 m/s², and the following is determined:

(1) The average brake control force measured when the vehicle is traveling between 80 percent and 10 percent of the specified test speed.

(2) The average vehicle deceleration in the period 0.5 to 1.0 seconds after the point of actuation of the brake control.

(3) The maximum vehicle deceleration during the complete stop but excluding the final 0.5 seconds.

(b) Conduct 3 baseline stops and average the values obtained in (1), (2), and (3).

S6.6.4 *Wet brake test—test conditions and procedure.*

(a) The vehicle is ridden at the test speed used in the baseline test set out in S6.6.3 with the water spray equipment operating on the brake(s) to be tested and with no application of the brake system.

(b) After a distance of ≥ 500 m, apply the average brake control force determined in the baseline test for the brake system being tested.

(c) Measure the average vehicle deceleration in the period 0.5 to 1.0 seconds after the point of actuation of the brake control.

(d) Measure the maximum vehicle deceleration during the complete stop but excluding the final 0.5 seconds.

S6.6.5 *Performance requirements.* When the brakes are tested in accordance with the test procedure set out in paragraph S6.6.4, the wet brake deceleration performance shall be:

(a) The value measured in paragraph S6.6.4(c) shall be ≥ 60 percent of the average deceleration values recorded in the baseline test in paragraph S6.6.3(a)(2), *i.e.*, in the period 0.5 to 1.0 seconds after the point of actuation of the brake control; and

(b) The value measured in S6.6.4(d) shall be ≤ 120 percent of the average

deceleration values recorded in the baseline test S6.6.3(a)(3), *i.e.*, during the complete stop but excluding the final 0.5 seconds.

S6.7 *Heat fade test.*

S6.7.1 *General information.*

(a) The test comprises three parts that are carried out consecutively for each brake system:

(1) A baseline test using the dry stop test—single brake control actuated (S6.3).

(2) A heating procedure which consists of a series of repeated stops in order to heat the brake(s).

(3) A hot brake stop using the dry stop test—single brake control actuated (S6.3), to measure the brake's performance after the heating procedure.

(b) The test is applicable to motorcycle categories 3–3, 3–4 and 3–5.

(c) The test is not applicable to parking brake systems and secondary service brake systems.

(d) All stops are carried out with the motorcycle laden.

(e) The heating procedure requires the motorcycle to be fitted with instrumentation that gives a continuous recording of brake control force and vehicle deceleration.

S6.7.2 *Baseline test.*

S6.7.2.1 *Vehicle condition—baseline test.* Engine disconnected.

S6.7.2.2 *Test conditions and procedure—baseline test.*

(a) *Initial brake temperature.* Initial brake temperature is ≥ 55 °C and ≤ 100 °C.

(b) *Test speed.* Test speed is 60 km/h or 0.9 Vmax, whichever is the lower.

(c) *Brake application.* Each service brake system control is actuated separately.

(d) *Brake actuation force.*

(1) Hand control: ≤ 200 N.

(2) Foot control:

(i) ≤ 350 N for motorcycle categories 3–3 and 3–5.

(ii) ≤ 500 N for motorcycle category 3–4.

(e) Accelerate the vehicle to the test speed, actuate the brake control under the conditions specified and record the control force required to achieve the vehicle braking performance specified in the table to S6.3.3 (Table 2).

S6.7.3 *Heating procedure.*

S6.7.3.1 *Vehicle condition—heating procedure.* Engine transmission:

(a) From the specified test speed to 50 percent specified test speed: connected, with the highest appropriate gear selected such that the engine speed remains above the manufacturer's specified idle speed.

(b) From 50 percent specified test speed to standstill: disconnected.

S6.7.3.2 *Test conditions and procedure—heating procedure.*

(a) *Initial brake temperature.* Initial brake temperature is (prior to first stop only) ≥ 55° C and ≤ 100 °C.

(b) *Test speed.*

(1) Single brake system, front wheel braking only: 100 km/h or 0.7 Vmax, whichever is the lower.

(2) Single brake system, rear wheel braking only: 80 km/h or 0.7 Vmax, whichever is the lower.

(3) CBS or split service brake system: 100 km/h or 0.7 Vmax, whichever is the lower.

(c) *Brake application.* Each service brake system control actuated separately.

(d) *Brake actuation force.*

(1) For the first stop: The constant control force that achieves a vehicle deceleration rate of 3.0–3.5 m/s² while the vehicle is decelerating between 80 percent and 10 percent of the specified speed.

(2) For the remaining stops:

(i) The same constant brake control force as used for the first stop.

(ii) Number of stops: 10.

(iii) Interval between stops: 1000 m.

(e) Carry out a stop to the conditions specified in this paragraph and then immediately use maximum acceleration to reach the specified speed and maintain that speed until the next stop is made.

S6.7.4 *Hot brake stop—test conditions and procedure.* Perform a single stop under the conditions used in the baseline test (S6.7.2) for the brake system that has been heated during the procedure in accordance with S6.7.3. This stop is carried out within one minute of the completion of the procedure set out in S6.7.3 with a brake control application force less than or equal to the force used during the test set out in S6.7.2.

S6.7.5 *Performance requirements.* When the brakes are tested in accordance with the test procedure set out in S6.7.4, the stopping distance $S_2$ shall be $\leq 1.67\ S_1 - 0.67 \times 0.1V$,

Where:

$S_1$ = corrected stopping distance in meters achieved in the baseline test set out in S6.7.2.

$S_2$ = corrected stopping distance in meters achieved in the hot brake stop set out in S6.7.4.

V = specified test speed in km/h.

S6.8 *Parking brake system test—for motorcycles with parking brakes.*

S6.8.1 *Vehicle condition.*

(a) The test is applicable to motorcycle categories 3–2, 3–4 and 3–5.

(b) Laden.

(c) Engine disconnected.

S6.8.2 *Test conditions and procedure.*

(a) *Initial brake temperature.* Initial brake temperature is ≤ 100 °C.

(b) *Test surface gradient.* Test surface gradient is equal to 18 percent.

(c) *Brake actuation force.*

(1) Hand control: ≤ 400 N.

(2) Foot control: ≤ 500 N.

(d) For the first part of the test, park the vehicle on the test surface gradient facing up the slope by applying the parking brake system under the conditions specified in this paragraph. If the vehicle remains stationary, start the measurement of the test period.

(e) On completion of the test with vehicle facing up the gradient, repeat the same test procedure with the vehicle facing down the gradient.

S6.8.3 *Performance requirements.* When tested in accordance with the test procedure set out in S6.8.2, the parking brake system shall hold the vehicle stationary (to the limits of traction of the braked wheels) for 5 minutes when the vehicle is both facing up and facing down the gradient.

S6.9 *ABS tests.*

S6.9.1 *General.*

(a) The tests are only applicable to the ABS fitted on motorcycle categories 3–1 and 3–3.

(b) The tests are to confirm the performance of brake systems equipped with ABS and their performance in the event of ABS electrical failure.

(c) *Fully cycling* means that the anti-lock system is repeatedly modulating the brake force to prevent the directly controlled wheels from locking.

(d) Wheel-lock is allowed as long as the stability of the vehicle is not affected to the extent that it requires the operator to release the control or causes a vehicle wheel to pass outside the test lane.

(e) The test series comprises the individual tests in Table 3, which may be carried out in any order.

S6.9.2 *Vehicle condition.*

(a) Lightly loaded.

(b) Engine disconnected.

S6.9.3 *Stops on a high-friction surface.*

S6.9.3.1 *Test conditions and procedure.*

(a) *Initial brake temperature.* Initial brake temperature is ≥ 55 °C and ≤ 100 °C.

(b) *Test speed.* Test speed is 60 km/h or 0.9 Vmax, whichever is lower.

(c) *Brake application.* Simultaneous actuation of both service brake system controls, if so equipped, or of the single service brake control in the case of a service brake system that operates on all wheels.

(d) *Brake actuation force.* The force applied is that which is necessary to ensure that the ABS will cycle fully throughout each stop, down to 10 km/h.

(e) If one wheel is not equipped with ABS, the control for the service brake on that wheel is actuated with a force that is lower than the force that will cause the wheel to lock.

(f) Number of stops: until the vehicle meets the performance requirements, with a maximum of 6 stops.

(g) For each stop, accelerate the vehicle to the test speed and then actuate the brake control under the conditions specified in this paragraph.

S6.9.3.2 *Performance requirements.* When the brakes are tested in accordance with the test procedures referred to in S6.9.3.1:

(a) the stopping distance (S) shall be $\leq 0.0063V^2$ (where V is the specified test speed in km/h and S is the required stopping distance in meters); and

(b) there shall be no wheel lock and the vehicle wheels shall stay within the test lane.

S6.9.4 *Stops on a low friction surface.*

S6.9.4.1 *Test conditions and procedure.* As set out in S6.9.3.1, but using the low friction surface instead of the high friction one.

S6.9.4.2 *Performance requirements.* When the brakes are tested in accordance with the test procedures set out in S6.9.4.1:

(a) the stopping distance (S) shall be $\leq 0.0056\ V^2/P$ (where V is the specified test speed in km/h, P is the peak braking coefficient and S is the required stopping distance in meters); and

(b) there shall be no wheel lock and the vehicle wheels shall stay within the test lane.

S6.9.5 *Wheel lock checks on high and low friction surfaces.*

S6.9.5.1 *Test conditions and procedure.*

(a) *Test surfaces.*

(b) *Initial brake temperature.* Initial brake temperature is ≥ 55 °C and ≤ 100 °C.

(c) *Test speed.*

(1) On the high friction surface: 80 km/h or 0.8 Vmax, whichever is lower.

(2) On the low friction surface: 60 km/h or 0.8 Vmax, whichever is lower.

(d) *Brake application.*

(1) Each service brake system control actuated separately.

(2) Where ABS is fitted to both brake systems, simultaneous actuation of both brake controls in addition to (1).

(e) *Brake actuation force.* The force applied is that which is necessary to ensure that the ABS will cycle fully throughout each stop, down to 10 km/h.

(f) *Brake application rate.* The brake control actuation force is applied in 0.2–0.5 seconds.

(g) Number of stops: until the vehicle meets the performance requirements, with a maximum of 3 stops.

(h) For each stop, accelerate the vehicle to the test speed and then actuate the brake control under the conditions specified in this paragraph.

S6.9.5.2 *Performance requirements.* When the brakes are tested in accordance with the test procedures set out in S6.9.5.1, there shall be no wheel lock and the vehicle wheels shall stay within the test lane.

S6.9.6 *Wheel lock check—high to low friction surface transition.*

S6.9.6.1 *Test conditions and procedure.*

(a) *Test surfaces.* A high friction surface immediately followed by a low friction surface.

(b) *Initial brake temperature.* Initial brake temperature is ≥ 55 °C and ≤ 100 °C.

(c) *Test speed.* The speed that will result in 50 km/h or 0.5 Vmax, whichever is the lower, at the point where the vehicle passes from the high friction to the low friction surface.

(d) *Brake application.*

(1) Each service brake system control actuated separately.

(2) Where ABS is fitted to both brake systems, simultaneous actuation of both brake controls in addition to (1).

(e) *Brake actuation force.* The force applied is that which is necessary to ensure that the ABS will cycle fully throughout each stop, down to 10 km/h.

(f) Number of stops: until the vehicle meets the performance requirements, with a maximum of 3 stops.

(g) For each stop, accelerate the vehicle to the test speed and then actuate the brake control before the vehicle reaches the transition from one friction surface to the other.

S6.9.6.2 *Performance requirements.* When the brakes are tested in accordance with the test procedures set out in S6.9.6.1, there shall be no wheel lock and the vehicle wheels shall stay within the test lane.

S6.9.7 *Wheel lock check—low to high friction surface transition.*

S6.9.7.1 *Test conditions and procedure.*

(a) *Test surfaces.* A low friction surface immediately followed by a high friction surface with a PBC ≥ 0.8.

(b) *Initial brake temperature.* Initial brake temperature is ≥ 55 °C and ≤ 100 °C.

(c) *Test speed.* The speed that will result in 50 km/h or 0.5 Vmax, whichever is the lower, at the point where the vehicle passes from the low friction to the high friction surface.

(d) *Brake application.*

(1) Each service brake system control applied separately.

(2) Where ABS is fitted to both brake systems, simultaneous application of both brake controls in addition to (1).

(e) *Brake actuation force.* The force applied is that which is necessary to ensure that the ABS will cycle fully throughout each stop, down to 10 km/h.

(f) Number of stops: until the vehicle meets the performance requirements, with a maximum of 3 stops.

(g) For each stop, accelerate the vehicle to the test speed and then actuate the brake control before the vehicle reaches the transition from one friction surface to the other.

(h) Record the vehicle's continuous deceleration.

S6.9.7.2 *Performance requirements.* When the brakes are tested in accordance with the test procedures set out in S6.9.7.1:

(a) there shall be no wheel lock and the vehicle wheels shall stay within the test lane, and

(b) within 1 second of the rear wheel passing the transition point between the low and high friction surfaces, the vehicle deceleration shall increase.

S6.9.8 *Stops with an ABS electrical failure.*

S6.9.8.1 *Test conditions and procedure.* With the ABS electrical system disabled, carry out the test set out in S6.3 (dry stop test—single brake control actuated) applying the conditions relevant to the brake system and vehicle being tested.

S6.9.8.2 *Performance requirements.* When the brakes are tested in accordance with the test procedure set out in S6.9.8.1:

(a) the system shall comply with the failure warning requirements of S5.1.10.2; and

(b) the minimum requirements for stopping distance shall be as specified in column 2 under the heading ''Single brake system, rear wheel(s) braking only'' in Table 2.

S6.10 *Partial failure test—for split service brake systems.*

S6.10.1 *General information.*

(a) The test is only applicable to vehicles that are equipped with split service brake systems.

(b) The test is to confirm the performance of the remaining subsystem in the event of a hydraulic system leakage failure.

S6.10.2 *Vehicle condition.*

(a) The test is applicable to motorcycle categories 3–3, 3–4 and 3–5.

(b) Lightly loaded.

(c) Engine disconnected.

S6.10.3 *Test conditions and procedure.*

(a) *Initial brake temperature*. Initial brake temperature is ≥ 55 °C and ≤ 100 °C.

(b) *Test speed*. Test speed is 50 km/h and 100 km/h or 0.8 Vmax, whichever is lower.

(c) Brake actuation force.

(1) Hand control: ≤ 250 N.

(2) Foot control: ≤ 400 N.

(d) Number of stops: until the vehicle meets the performance requirements, with a maximum of 6 stops for each test speed.

(e) Alter the service brake system to induce a complete loss of braking in any one subsystem. Then, for each stop, accelerate the vehicle to the test speed and then actuate the brake control under the conditions specified in this paragraph.

(f) Repeat the test for each subsystem.

S6.10.4 *Performance requirements*. When the brakes are tested in accordance with the test procedure set out in S6.10.3:

(a) The system shall comply with the failure warning requirements set out in paragraph 3.1.11.; and

(b) The stopping distance (S) shall be $\leq 0.1\ V + 0.0117\ V^2$ (where V is the specified test speed in km/h and S is the required stopping distance in meters).

S6.11 *Power-assisted braking system failure test*.

S6.11.1 *General information*.

(a) The test is not conducted when the vehicle is equipped with another separate service brake system.

(b) The test is to confirm the performance of the service brake system in the event of failure of the power assistance.

S6.11.2 *Test conditions and procedure*. Carry out the test set out in S6.3.3 (dry stop test—single brake control actuated) for each service brake system with the power assistance disabled.

S6.11.3 *Performance requirements*. When the brakes are tested in accordance with the test procedure set out in S6.11.2, the stopping distance shall be as specified in column 2 of Table 4. Note that if the power assistance may be activated by more than one control, the above performance shall be achieved when each control is actuated separately.

BILLING CODE 4910–59–P

## TABLES AND FIGURES TO § 571.122

Table 1. Test Sequence

| Test order | Paragraph |
|---|---|
| 1. Dry stop - single brake control actuated | S6.3. |
| 2. Dry stop - all service brake controls actuated | S6.4. |
| 3. High speed | S6.5. |
| 4. Wet brake | S6.6. |
| 5. Heat fade* | S6.7. |
| 6. If fitted: | |
| 6.1. Parking brake system | S6.8. |
| 6.2. ABS | S6.9. |
| 6.3. Partial failure, for split service brake systems | S6.10. |
| 6.4. Power-assisted braking system failure | S6.11. |

* Heat fade is always the last test to be carried out.

Table 2. Performance requirements, Dry stop test – single brake control actuated.

| Column 1 | Column 2 |
|---|---|
| Motorcycle Category | STOPPING DISTANCE (S) (Where V is the specified test speed in km/h and S is the required stopping distance in meters) |
| Single brake system, front wheel(s) braking only: | |
| 3-1 | $S \leq 0.1\ V + 0.0111\ V^2$ |
| 3-2 | $S \leq 0.1\ V + 0.0143\ V^2$ |
| 3-3 | $S \leq 0.1\ V + 0.0087\ V^2$ |
| 3-4 | Not applicable |
| 3-5 | $S \leq 0.1\ V + 0.0105\ V^2$ |
| Single brake system, rear wheel(s) braking only: | |
| 3-1 | $S \leq 0.1\ V + 0.0143\ V^2$ |
| 3-2 | $S \leq 0.1\ V + 0.0143\ V^2$ |
| 3-3 | $S \leq 0.1\ V + 0.0133\ V^2$ |
| 3-4 | Not applicable |
| 3-5 | $S \leq 0.1\ V + 0.0105\ V^2$ |
| Vehicles with CBS or split service brake systems: for laden and lightly loaded conditions. | |
| 3-1 and 3-2 | $S \leq 0.1\ V + 0.0087\ V^2$ |
| 3-3 | $S \leq 0.1\ V + 0.0076\ V^2$ |
| 3-4 | $S \leq 0.1\ V + 0.0077\ V^2$ |
| 3-5 | $S \leq 0.1\ V + 0.0071\ V^2$ |
| Vehicles with CBS – secondary service brake system: | |
| ALL | $S \leq 0.1\ V + 0.0154\ V^2$ |

Table 3. ABS tests.

| ABS TESTS | PARAGRAPH |
|---|---|
| a. Stops on a high friction surface - as specified in S6.1.1.1. | S6.9.3 |
| b. Stops on a low friction surface - as specified in S6.1.1.2. | S6.9.4 |
| c. Wheel lock checks on high and low friction surfaces. | S6.9.5 |
| d. Wheel lock check - high to low friction surface transition. | S6.9.6 |
| e. Wheel lock check - low to high friction surface transition. | S6.9.7 |
| f. Stops with an ABS electrical failure. | S6.9.8 |

Table 4. Performance requirements, Power-assisted braking system failure test.

| Column 1 | Column 2 |
|---|---|
| Vehicle Category | STOPPING DISTANCE(S) (Where V is the specified test speed in km/h and S is the required stopping distance in metres) |
| Single brake system: | |
| 3-1 | $S \leq 0.1\ V + 0.0143\ V^2$ |
| 3-2 | $S \leq 0.1\ V + 0.0143\ V^2$ |
| 3-3 | $S \leq 0.1\ V + 0.0133\ V^2$ |
| 3-5 | $S \leq 0.1\ V + 0.0105\ V^2$ |
| Vehicles with CBS or split service brake systems: | |
| All | $S \leq 0.1\ V + 0.0154\ V^2$ |

Figure 1. Hand control lever force application points and direction.

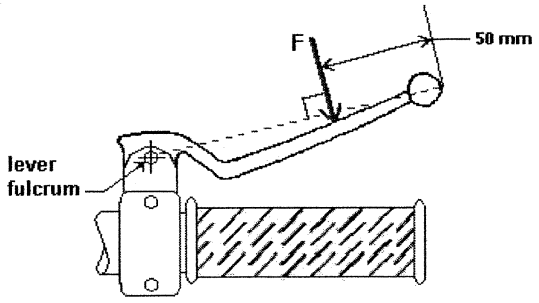

Figure 2. Typical Plug Type Thermocouple Installations

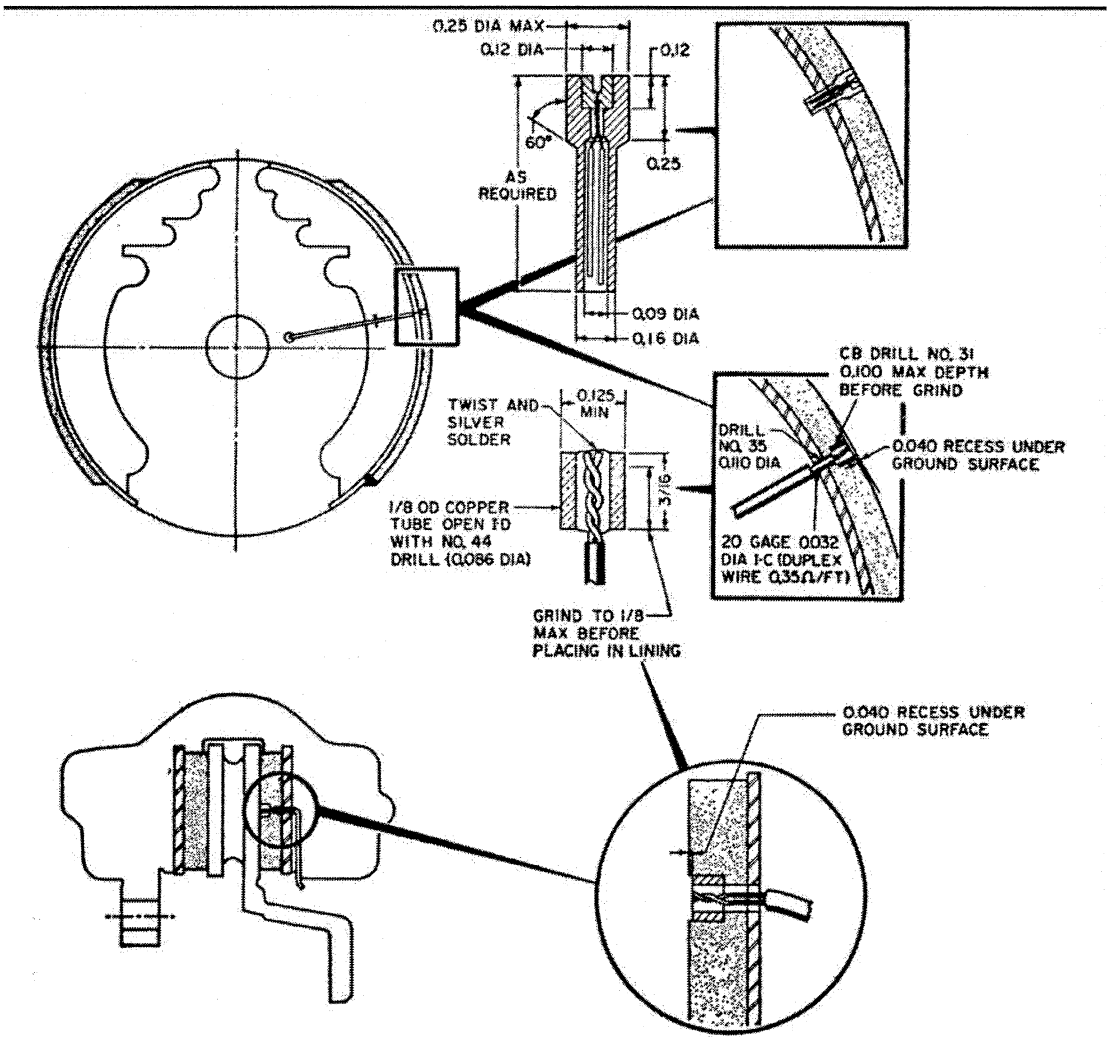

Figure 3. Wet brake test.

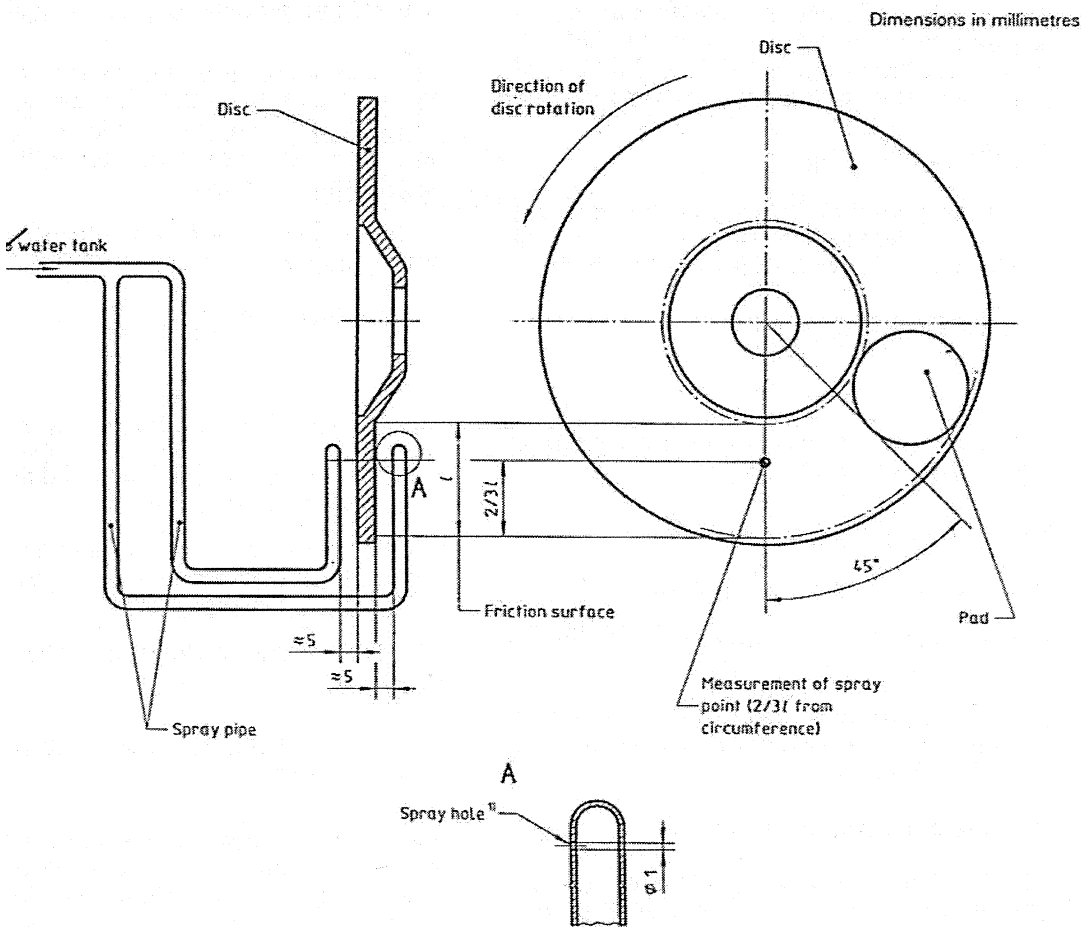


Issued on: September 10, 2008.

**Stephen R. Kratzke,**

*Associate Administrator for Rulemaking.*

[FR Doc. E8–21568 Filed 9–16–08; 8:45 am]

**BILLING CODE 4910–59–C**

Federal Register

Wednesday,
September 17, 2008

# Part V

# The President

**Proclamation 8287—National Hispanic Heritage Month, 2008**

**Proclamation 8288—National Employer Support of the Guard and Reserve Week, 2008**

**Presidential Determination No. 2008–27 of September 12, 2008—Continuation of the Exercise of Certain Authorities under the Trading With the Enemy Act**

Federal Register
Vol. 73, No. 181
Wednesday, September 17, 2008

# Presidential Documents

**Title 3—**

## The President

**Proclamation 8287**

## National Hispanic Heritage Month, 2008

**By the President of the United States of America**

**A Proclamation**

During National Hispanic Heritage Month, we recognize the many Americans of Hispanic descent who have made outstanding contributions to our Nation.

The rich cultural traditions of the Hispanic-American community have made a remarkable impact on American society. The diverse backgrounds of Hispanic Americans and their dedication to family have become an integral part of America. With a deep commitment to faith and a strong desire to live the American dream, these citizens are realizing the full blessings of liberty. Educational opportunities are helping a new generation work toward success, and many Hispanic Americans operate thriving small businesses.

We also honor Hispanic Americans for their strong tradition of service in the Armed Forces. These proud patriots have fought in every war since our founding, and many have earned the Medal of Honor for their courage. Hispanic service men and women have shown their love for the United States by answering the call to serve, and we owe them and their families a tremendous debt of gratitude. Their patriotism and valor have added to the character of our Nation.

National Hispanic Heritage Month is an opportunity to celebrate the spirit and accomplishments of Hispanic Americans everywhere. To honor those achievements, the Congress, by Public Law 100–402, as amended, has authorized and requested the President to issue annually a proclamation designating September 15 through October 15 as ''National Hispanic Heritage Month.''

NOW, THEREFORE, I, GEORGE W. BUSH, President of the United States of America, by virtue of the authority vested in me by the Constitution and the laws of the United States, do hereby proclaim September 15 through October 15, 2008, as National Hispanic Heritage Month. I call upon public officials, educators, librarians, and all the people of the United States to observe this month with appropriate ceremonies, activities, and programs.

IN WITNESS WHEREOF, I have hereunto set my hand this twelfth day of September, in the year of our Lord two thousand eight, and of the Independence of the United States of America the two hundred and thirty-third.

[FR Doc. E8–21859
Filed 9–16–08; 8:45 am]
Billing code 3195–01–P

Federal Register
Vol. 73, No. 181
Wednesday, September 17, 2008

# Presidential Documents

**Title 3—**

## The President

**Proclamation 8288**

## National Employer Support of the Guard And Reserve Week, 2008

**By the President of the United States of America**

**A Proclamation**

Throughout history, America has counted on brave individuals willing to put on the uniform to protect our land and defend our way of life. This week we honor and recognize the many contributions members of our National Guard and Reserve make to our Nation, and we thank the civilian employers who support these individuals as they answer the call of duty.

The men and women of the National Guard and Reserve have demonstrated the highest form of citizenship, and their service is vital to the security of our country and the peace of the world. As the early patriots who claimed our Nation's liberty did, today's Guard and Reserve are fighting a new and unprecedented war and pledging their lives and honor to defend our freedom. As many of those early patriots did, members of today's Guard and Reserve lead civilian lives but stand ready to wear our Nation's uniform when liberty is threatened. The families of the National Guard and Reserve serve our Nation by proudly standing behind these brave men and women, and America appreciates their sacrifice as well.

In all they do, the National Guard and Reserve and their families represent the best of the American spirit.

Our Nation also depends on the commitment of the civilian employers of the members of the National Guard and Reserve. In offices and factories across America, organizations do without the talents of many hard-working people who have been called upon to protect our country. Our Nation's employers provide time off, pay, healthcare benefits, and job security because they care about and love their country. These businesses have put patriotism above profit, and they deserve the gratitude of all Americans.

During National Employer Support of the Guard and Reserve Week, a grateful country pays tribute to the men and women of the National Guard and Reserve, and we express our gratitude to the employers who support them and help enable them to serve.

NOW, THEREFORE, I, GEORGE W. BUSH, President of the United States of America, by virtue of the authority vested in me by the Constitution and laws of the United States, do hereby proclaim September 14 through September 20, 2008, as National Employer Support of the Guard and Reserve Week. I encourage all Americans to join me in expressing our thanks to members of our National Guard and Reserve and their civilian employers for their patriotism and sacrifices on behalf of our Nation. I also call upon State and local officials, private organizations, businesses, and all military commanders to observe this week with appropriate ceremonies and activities.

IN WITNESS WHEREOF, I have hereunto set my hand this twelfth day of September, in the year of our Lord two thousand eight, and of the Independence of the United States of America the two hundred and thirty-third.

[FR Doc. E8–21860
Filed 9–16–08; 8:45 am]
Billing code 3195–01–P

Federal Register
Vol. 73, No. 181
Wednesday, September 17, 2008

# Presidential Documents

**Title 3—**

## The President

**Presidential Determination No. 2008–27 of September 12, 2008**

## Continuation of the Exercise of Certain Authorities Under the Trading With the Enemy Act

**Memorandum for the Secretary of State [and] the Secretary of the Treasury**

Under section 101(b) of Public Law 95–223 (91 Stat. 1625; 50 U.S.C. App. 5(b) note), and a previous determination on September 13, 2007 (72 *FR* 53409), the exercise of certain authorities under the Trading With the Enemy Act is scheduled to terminate on September 14, 2008.

I hereby determine that the continuation for 1 year of the exercise of those authorities with respect to Cuba is in the national interest of the United States.

Therefore, consistent with the authority vested in me by section 101(b) of Public Law 95–223, I continue for 1 year, until September 14, 2009, the exercise of those authorities with respect to Cuba as implemented by the Cuban Assets Control Regulations, 31 C.F.R. Part 515.

The Secretary of the Treasury is authorized and directed to publish this determination in the *Federal Register*.

THE WHITE HOUSE,
*Washington, September 12, 2008*

[FR Doc. E8–21861
Filed 9–16–08; 8:45 am]
Billing code 4811–33–M

# Reader Aids

**Federal Register**

Vol. 73, No. 181

Wednesday, September 17, 2008

## CUSTOMER SERVICE AND INFORMATION

| | |
|---|---|
| **Federal Register/Code of Federal Regulations** | |
| General Information, indexes and other finding aids | **202–741–6000** |
| **Laws** | **741–6000** |
| **Presidential Documents** | |
| Executive orders and proclamations | **741–6000** |
| **The United States Government Manual** | **741–6000** |
| **Other Services** | |
| Electronic and on-line services (voice) | **741–6020** |
| Privacy Act Compilation | **741–6064** |
| Public Laws Update Service (numbers, dates, etc.) | **741–6043** |
| TTY for the deaf-and-hard-of-hearing | **741–6086** |

## ELECTRONIC RESEARCH

### World Wide Web

Full text of the daily Federal Register, CFR and other publications is located at: **http://www.gpoaccess.gov/nara/index.html**

Federal Register information and research tools, including Public Inspection List, indexes, and links to GPO Access are located at: **http://www.archives.gov/federal__register**

### E-mail

**FEDREGTOC-L** (Federal Register Table of Contents LISTSERV) is an open e-mail service that provides subscribers with a digital form of the Federal Register Table of Contents. The digital form of the Federal Register Table of Contents includes HTML and PDF links to the full text of each document.

To join or leave, go to **http://listserv.access.gpo.gov** and select *Online mailing list archives, FEDREGTOC-L, Join or leave the list (or change settings);* then follow the instructions.

**PENS** (Public Law Electronic Notification Service) is an e-mail service that notifies subscribers of recently enacted laws.

To subscribe, go to **http://listserv.gsa.gov/archives/publaws-l.html** and select *Join or leave the list (or change settings);* then follow the instructions.

**FEDREGTOC-L** and **PENS** are mailing lists only. We cannot respond to specific inquiries.

**Reference questions.** Send questions and comments about the Federal Register system to: **fedreg.info@nara.gov**

The Federal Register staff cannot interpret specific documents or regulations.

## FEDERAL REGISTER PAGES AND DATE, SEPTEMBER

51209–51350 ..... 2
51351–51572 ..... 3
51573–51716 ..... 4
51717–51898 ..... 5
51899–52170 ..... 8
52171–52572 ..... 9
52573–52774 .....10
52775–52902 .....11
52903–53104 .....12
53105–53354 .....15
53355–53684 .....16
53685–54056 .....17

## CFR PARTS AFFECTED DURING SEPTEMBER

At the end of each month, the Office of the Federal Register publishes separately a List of CFR Sections Affected (LSA), which lists parts and sections affected by documents published since the revision date of each title.

**3 CFR**

**Proclamations:**
7463 (See Notice of August 28, 2008) .....51211
8284 .....51213
8285 .....51897
8286 .....52773
8287 .....54051
8288 .....54053

**Executive Orders:**
13285 (Amended by 13471) .....51209
13471 .....51209
13472 .....53353

**Administrative Orders:**
Notices:
Notice of August 28, 2008 .....51211
Presidential Determinations:
No. 2008-27 of September 12, 2008 .....54055

**5 CFR**

**Proposed Rules:**
302 .....51944
330 .....51944
332 .....51245
335 .....51944
337 .....51944
410 .....51248, 51944
412 .....51248

**7 CFR**

6 .....53355
210 .....52903
220 .....52903
301 .....51717
457 .....51573
613 .....51351
946 .....52573
948 .....52171
1000 .....51352
1291 .....51585
3430 .....51717

**9 CFR**

71 .....52173
77 .....52775
78 .....51353
83 .....52173
93 .....52173
317 .....52189
318 .....52193
381 .....51899, 52189, 52193
430 .....51355
439 .....52193
442 .....52189

**10 CFR**

50 .....52730

**Proposed Rules:**
73 .....51378

**11 CFR**

**Proposed Rules:**
100 .....51960
104 .....51960

**12 CFR**

8 .....52576
202 .....53685
229 .....52908
1231 .....53356

**14 CFR**

39 .....51903, 51906, 51908, 51910, 51912, 52201, 52203, 52205, 52777, 52909, 52911, 52914, 53105
71 .....51356, 51357, 52208, 52209, 53113
73 .....52916, 53359
95 .....51591
97 .....51215, 51358, 52779, 52782
382 .....53114

**Proposed Rules:**
39 .....51252, 51384, 51382, 51604, 51961, 52932, 53764, 53766, 53768, 53770, 53773
71 .....51252, 51254, 51605, 52638, 52934

**15 CFR**

738 .....51217
740 .....51217
774 .....51718

**Proposed Rules:**
806 .....52800, 52802
922 .....53161

**16 CFR**

**Proposed Rules:**
317 .....53393, 53394
1500 .....51384, 51386

**17 CFR**

239 .....52752
240 .....52752
249 .....52752

**Proposed Rules:**
40 .....51961
41 .....51961
145 .....51961

**18 CFR**

**Proposed Rules:**
35 .....51744

**19 CFR**

122 .....52577

**Proposed Rules:**
4 .....51962

7 ....51962
10 ....51962
102 ....51962
134 ....51962
177 ....51962

**20 CFR**

**Proposed Rules:**
404 ....51963
408 ....51963
416 ....51963
422 ....51963

**21 CFR**

16 ....51912
210 ....51919
211 ....51919
520 ....53685
803 ....53686
1240 ....51912
**Proposed Rules:**
129 ....53775
165 ....53775
878 ....52804

**22 CFR**

122 ....52578
1304 ....53686

**24 CFR**

206 ....51596
**Proposed Rules:**
26 ....52122
28 ....52130
201 ....53346
203 ....53346
1003 ....52166

**25 CFR**

**Proposed Rules:**
293 ....51255

**26 CFR**

1 ....51719, 52528, 53934
301 ....52784
602 ....52528, 53934
**Proposed Rules:**
1 ....51747, 52218, 52220, 53793
301 ....52805

**29 CFR**

4022 ....53115
4044 ....53115
**Proposed Rules:**
2700 ....51256

**30 CFR**

6 ....52210
7 ....52210
15 ....52210
18 ....52210
19 ....52210
20 ....52210
22 ....52210
23 ....52210
27 ....52210
28 ....52210
33 ....52210
35 ....52210
36 ....52210
49 ....53116
74 ....52210
75 ....53124
256 ....52917
934 ....52921
**Proposed Rules:**
56 ....52136
57 ....52136
66 ....52136
250 ....53793

**31 CFR**

1 ....51218
50 ....53359
210 ....52578
501 ....51933
**Proposed Rules:**
50 ....53798

**33 CFR**

100 ....51221
105 ....52924, 53128
117 ....51361, 52924, 52925
138 ....53691
165 ....51362, 51365, 51597, 51719, 51941, 52788, 53128
334 ....52926
**Proposed Rules:**
117 ....52934
165 ....53395, 53398

**34 CFR**

**Proposed Rules:**
Ch. VI ....51990

**36 CFR**

215 ....53705
218 ....53705
**Proposed Rules:**
223 ....51388

**39 CFR**

3020 ....51714
**Proposed Rules:**
3001 ....53324
3050 ....53324
3001 ....51888, 51983
3030 ....51888
3031 ....51888

**40 CFR**

35 ....52584
52 ....51222, 51226, 51599, 53130, 53132, 53134, 53137, 53366, 53373, 53378, 53716
55 ....53718
70 ....53137
130 ....52928
131 ....53140
174 ....52591
180 ....51722, 51727, 51732, 51736, 51738, 52594, 52597, 52603, 52607, 52616, 53721, 53725, 53732
282 ....53742
300 ....51368, 53143
**Proposed Rules:**
52 ....51257, 51258, 51606, 52226, 53162, 53163, 53401, 53403, 53404
55 ....51610
63 ....53163
70 ....53163
81 ....51259
131 ....53178
300 ....51393, 53179

**41 CFR**

302-17 ....51228

**42 CFR**

412 ....52928

**43 CFR**

**Proposed Rules:**
419 ....53180

**44 CFR**

64 ....53747, 53748
65 ....52619, 53750
67 ....52621
**Proposed Rules:**
67 ....51400, 52230, 52233, 52234, 53809, 53814

**45 CFR**

2 ....53148
2510 ....53752
2513 ....53752
2516 ....53752
2517 ....53752
2520 ....53752
2521 ....53752
2522 ....53752
2523 ....53752
2524 ....53752
2540 ....53752
2541 ....53752
2550 ....53752

**46 CFR**

10 ....52789
15 ....52789

**47 CFR**

2 ....51375
15 ....51375
27 ....51375
73 ....52213
74 ....51375
**Proposed Rules:**
2 ....51406
15 ....51406
27 ....51406
73 ....52937
74 ....51406

**48 CFR**

Ch. 1 ....53990, 54016
2 ....53992, 53993
4 ....53994
5 ....53995
6 ....53995, 53996
8 ....53994
9 ....53994
12 ....53995, 53997, 54007
13 ....54008
15 ....54016
16 ....54008
18 ....53994, 53995
19 ....53993
23 ....54011
26 ....53995
30 ....54011, 54013
32 ....53997
33 ....53997
36 ....53997
37 ....54014
42 ....53997
44 ....53994
52 ....53992, 53994, 53995, 53997, 54011, 54013, 54014, 54016
202 ....53151
206 ....53151
225 ....53151
237 ....53156
252 ....53151
**Proposed Rules:**
505 ....53404
1652 ....51260
9904 ....51261

**49 CFR**

385 ....53383
605 ....53384
**Proposed Rules:**
172 ....52558
192 ....52938, 53076
193 ....53076
195 ....53076
225 ....52496
571 ....52939, 54020

**50 CFR**

20 ....51704
216 ....53157
229 ....51228
300 ....52795
648 ....51743, 52214, 52634, 52635, 52929, 53158
660 ....53763
679 ....51242, 51243, 51601, 51602, 52217, 52637, 52797, 52798, 52929, 52930, 53159, 53390
**Proposed Rules:**
17 ....51415, 52235, 52257, 53492
223 ....51615
224 ....51415, 51615
226 ....51747, 52084
402 ....52942
622 ....51617
665 ....51992
679 ....53816
680 ....52806

## REMINDERS

The items in this list were editorially compiled as an aid to Federal Register users. Inclusion or exclusion from this list has no legal significance.

## RULES GOING INTO EFFECT SEPTEMBER 17, 2008

**DEFENSE DEPARTMENT**

Federal Acquisition Regulation:

FAR Case 2006-025, Online Representations and Certifications Application Review; published 9-17-08

FAR Case 2006-027, Accepting and Dispensing of $1 Coin; published 9-17-08

FAR Case 2007-022, Subcontractor Requests for Bonds; published 9-17-08

FAR Case 2008-002, Extension of Authority for Use of Simplified Acquisition Procedures for Certain Commercial Items; published 9-17-08

FAR Case 2008-006, Enhanced Competition for Task and Delivery Order Contracts-Section 843 of the Fiscal Year 2008 National Defense Authorization Act; published 9-17-08

Technical Amendment; published 9-17-08

**ENVIRONMENTAL PROTECTION AGENCY**

Inert Ingredient; Exemption from the Requirement of a Tolerance:

Amylopectin, acid-hydrolyzed, 1-octenylbutanedioate and for amylopectin, hydrogen 1-octadecenylbutanedioate; published 9-17-08

Pesticide Tolerances:

Ethoprop; published 9-17-08

Tolerance Actions:

2,4-D, Bensulide, Chlorpyrifos, DCPA, Desmedipham, Dimethoate, Fenamiphos, Metolachlor, Phorate, Sethoxydim, Terbufos, Tetrachlorvinphos, and Triallate; published 9-17-08

**GENERAL SERVICES ADMINISTRATION**

Federal Acquisition Regulation:

FAR Case 2006-025, Online Representations and Certifications Application Review; published 9-17-08

FAR Case 2006-027, Accepting and Dispensing of $1 Coin; published 9-17-08

FAR Case 2007-022, Subcontractor Requests for Bonds; published 9-17-08

FAR Case 2008-002, Extension of Authority for Use of Simplified Acquisition Procedures for Certain Commercial Items; published 9-17-08

FAR Case 2008-006, Enhanced Competition for Task and Delivery Order Contracts-Section 843 of the Fiscal Year 2008 National Defense Authorization Act; published 9-17-08

Technical Amendment; published 9-17-08

**HEALTH AND HUMAN SERVICES DEPARTMENT**

**Food and Drug Administration**

Oral Dosage Form New Animal Drugs:

Sulfadiazine/Pyrimethamine Suspension; published 9-17-08

**MILLENNIUM CHALLENGE CORPORATION**

Freedom of Information Act Regulations; published 9-17-08

**NATIONAL AERONAUTICS AND SPACE ADMINISTRATION**

Federal Acquisition Regulation:

FAR Case 2006-025, Online Representations and Certifications Application Review; published 9-17-08

FAR Case 2006-027, Accepting and Dispensing of $1 Coin; published 9-17-08

FAR Case 2007-022, Subcontractor Requests for Bonds; published 9-17-08

FAR Case 2008-002, Extension of Authority for Use of Simplified Acquisition Procedures for Certain Commercial Items; published 9-17-08

FAR Case 2008-006, Enhanced Competition for Task and Delivery Order Contracts-Section 843 of the Fiscal Year 2008 National Defense Authorization Act; published 9-17-08

Technical Amendment; published 9-17-08

**TRANSPORTATION DEPARTMENT**

**Federal Aviation Administration**

Airworthiness Directives:

Airbus Model A310 Airplanes; published 8-13-08

Boeing Model 747 100, 747 100B, 747 100B SUD, 747 200B, 747 200C, 747 200F, 747 300, 747 400, 747SR, and 747SP Series Airplanes; published 8-13-08

Bombardier Model DHC 8 102, DHC-8-103, DHC 8 106, DHC-8-201, DHC-8-202, DHC-8-301, DHC-8-311, and DHC 8 315 Airplanes; published 8-13-08

Diamond Aircraft Industries GmbH Model DA 42 Airplanes; published 8-13-08

Dornier Model 328-100 Airplanes; published 8-13-08

McDonnell Douglas Model DC-8-61, DC-8-61F, DC 8 63, DC-8-63F, DC-8-71F, and DC-8-73F Airplanes; published 8-13-08

Pilatus Aircraft Ltd. Model PC-6 Airplanes; published 8-13-08

**TRANSPORTATION DEPARTMENT**

**National Highway Traffic Safety Administration**

Insurer Reporting Requirements; List of Insurers Required to File Reports; published 8-18-08

**TREASURY DEPARTMENT**

**Internal Revenue Service**

Unified Rule for Loss on Subsidary Stock; published 9-17-08

## COMMENTS DUE NEXT WEEK

**AGRICULTURE DEPARTMENT**

**Agricultural Marketing Service**

Cotton Board Rules and Regulations; Adjusting Supplemental Assessment on Imports (2008 Amendments); comments due by 9-22-08; published 7-24-08 [FR E8-16957]

Temporary Suspension of Order Provisions Regarding Continuance Referenda:

Oranges, Grapefruit, Tangerines, and Tangelos Grown in Florida; comments due by 9-26-08; published 8-27-08 [FR E8-19749]

**AGRICULTURE DEPARTMENT**

**Animal and Plant Health Inspection Service**

Tuberculosis; Require Approved Herd Plans Prior to Payment of Indemnity; comments due by 9-22-08; published 7-24-08 [FR E8-16949]

**COMMERCE DEPARTMENT**

**International Trade Administration**

Watch Movement and Jewelry Programs 2008; Changes in the Insular Possessions; comments due by 9-22-08; published 8-21-08 [FR E8-19411]

**COMMERCE DEPARTMENT**

**National Oceanic and Atmospheric Administration**

Fisheries in the Western Pacific:

Western Pacific Pelagic Fisheries; Control Date; Hawaii Pelagic Charter Fishery; comments due by 9-22-08; published 7-22-08 [FR E8-16786]

Magnuson-Stevens Act Provisions; Annual Catch Limits; National Standard Guidelines; comments due by 9-22-08; published 8-13-08 [FR E8-18756]

Taking of Marine Mammals Incidental to Commercial Fishing Operations; Bottlenose Dolphin Take Reduction Plan; comments due by 9-22-08; published 8-22-08 [FR E8-19580]

Taking of Marine Mammals Incidental to Commercial Fishing Operations:

Atlantic Pelagic Longline Take Reduction Plan; comments due by 9-22-08; published 6-24-08 [FR E8-14274]

U.S. Climate Change Science Program Synthesis and Assessment Product Draft Report 1.2 Past Climate Variability and Change in the Arctic and at High Latitude; comments due by 9-25-08; published 8-11-08 [FR E8-18405]

**ENERGY DEPARTMENT**

**Federal Energy Regulatory Commission**

Order Requesting Supplemental Comments; comments due by 9-22-08; published 7-24-08 [FR E8-16868]

**ENVIRONMENTAL PROTECTION AGENCY**

Approval and Promulgation of Air Quality Implementation

Plans; Commonwealth of Pennsylvania:
Reasonably Available Control Technology Requirements for Volatile Organic Compounds and Nitrogen Oxides; comments due by 9-25-08; published 8-26-08 [FR E8-19756]
Approval and Promulgation of Air Quality Implementation Plans:
Virginia; Emission Reductions from Large Stationary Internal Combustion Engines and Large Cement Kilns; comments due by 9-22-08; published 8-21-08 [FR E8-19422]
Approval and Promulgation of Implementation Plans and Operating Permits Program:
Iowa; comments due by 9-24-08; published 8-25-08 [FR E8-19519]
Approval and Promulgation of Plans:
North Carolina; Miscellaneous Revisions; comments due by 9-22-08; published 8-22-08 [FR E8-19192]
Environmental Statements; Notice of Intent:
Coastal Nonpoint Pollution Control Programs; States and Territories—
Florida and South Carolina; Open for comments until further notice; published 2-11-08 [FR 08-00596]
Lead; Fees for Accreditation of Training Programs and Certification of Lead-Based Paint Activities and Renovation Contractors; comments due by 9-22-08; published 8-21-08 [FR E8-19432]
National Emission Standards for Organic Hazardous Air Pollutants from the Synthetic Organic Chemical Manufacturing Industry, etc.; comments due by 9-22-08; published 8-6-08 [FR E8-18142]
National Oil and Hazardous Substance Pollution Contingency Plan; National Priorities List; comments due by 9-22-08; published 8-21-08 [FR E8-19256]
Pesticide Tolerance for Emergency Exemption:
Fludioxonil; comments due by 9-22-08; published 7-23-08 [FR E8-16876]

**FEDERAL COMMUNICATIONS COMMISSION**
Assessment and Collection of Regulatory Fees (2008 FY); comments due by 9-25-08; published 8-26-08 [FR E8-19431]
Facilitating the Provision of Fixed and Mobile Broadband Access:
Educational and Other Advanced Services in the 2150-2162 and 2500-2690 MHz Bands; comments due by 9-22-08; published 7-8-08 [FR E8-15445]
Radio Broadcasting Services:
Asbury and Maquoketa, IA, and Mineral Point, WI; comments due by 9-22-08; published 8-26-08 [FR E8-19647]
Blythe, CA; comments due by 9-22-08; published 8-26-08 [FR E8-19652]
French Lick, IN; Irvington, KY; comments due by 9-22-08; published 8-26-08 [FR E8-19651]
Sponsorship Identification Rules and Embedded Advertising; comments due by 9-22-08; published 7-24-08 [FR E8-16998]
Television Broadcasting Services:
Madison, WI; comments due by 9-22-08; published 8-22-08 [FR E8-19543]
Television Broadcasting:
Yuma, AZ; comments due by 9-22-08; published 8-22-08 [FR E8-19542]

**HEALTH AND HUMAN SERVICES DEPARTMENT**
**Food and Drug Administration**
Irradiation in the Production, Processing, and Handling of Food; comments due by 9-22-08; published 8-22-08 [FR E8-19573]

**HEALTH AND HUMAN SERVICES DEPARTMENT**
Ensuring that Department of Health and Human Services Funds Do Not Support Coercive or Discriminatory Policies or Practices In Violation of Federal Law; comments due by 9-22-08; published 8-26-08 [FR E8-19744]

**HOMELAND SECURITY DEPARTMENT**
**U.S. Customs and Border Protection**
Uniform Rules of Origin for Imported Merchandise; comments due by 9-23-08; published 7-25-08 [FR E8-17025]

**HOMELAND SECURITY DEPARTMENT**
**Coast Guard**
Drawbridge Operation Regulations:
Islais Creek, San Francisco, CA; comments due by 9-22-08; published 7-24-08 [FR E8-16896]
Special Local Regulation:
Cape Fear Dragon Boat Festival, Wilmington, NC; comments due by 9-27-08; published 8-14-08 [FR E8-18789]

**HOMELAND SECURITY DEPARTMENT**
**U.S. Citizenship and Immigration Services**
Domestic Violence Guidance Pamphlet for K Nonimmigrants; comments due by 9-22-08; published 7-22-08 [FR E8-16521]

**INTERIOR DEPARTMENT**
**Land Management Bureau**
Oil Shale Management - General; comments due by 9-22-08; published 7-23-08 [FR E8-16275]

**INTERIOR DEPARTMENT**
**National Park Service**
Special Regulation; Areas of the National Park System, National Capital Region; comments due by 9-22-08; published 8-8-08 [FR E8-18412]

**INTERIOR DEPARTMENT**
**Surface Mining Reclamation and Enforcement Office**
Montana Regulatory Program; comments due by 9-25-08; published 8-26-08 [FR E8-19712]

**JUSTICE DEPARTMENT**
**Drug Enforcement Administration**
Electronic Prescriptions for Controlled Substances; comments due by 9-25-08; published 6-27-08 [FR E8-14405]

**NUCLEAR REGULATORY COMMISSION**
Natural Resources Defense Council; Receipt of Petition for Rulemaking; Reopening of Public Comment Period; comments due by 9-25-08; published 8-25-08 [FR E8-19609]

**PERSONNEL MANAGEMENT OFFICE**
Federal Employees Dental and Vision Insurance Program; comments due by 9-25-08; published 8-26-08 [FR E8-19761]
Implementation of the Freedom of Information Act; comments due by 9-22-08; published 7-24-08 [FR E8-16796]

**POSTAL REGULATORY COMMISSION**
Administrative Practice and Procedure, Confidential Business Information, Postal Service; comments due by 9-25-08; published 8-26-08 [FR E8-19677]

**POSTAL SERVICE**
New Automation Requirements for Detached Addressed Labels; comments due by 9-26-08; published 8-27-08 [FR E8-19803]

**SECURITIES AND EXCHANGE COMMISSION**
Proposed Amendment to Municipal Securities Disclosure; comments due by 9-22-08; published 8-7-08 [FR E8-17856]
Self-Regulatory Organizations; Proposed Rule Changes:
Chicago Board Options Exchange, Inc.; comments due by 9-25-08; published 9-4-08 [FR E8-20464]

**SOCIAL SECURITY ADMINISTRATION**
Authorization of Representative Fees; comments due by 9-25-08; published 8-26-08 [FR E8-19674]

**TRANSPORTATION DEPARTMENT**
Procedures for Transportation Workplace Drug Testing Programs; comments due by 9-25-08; published 8-26-08 [FR E8-19816]

**TRANSPORTATION DEPARTMENT**
**Federal Aviation Administration**
Airworthiness Directives:
Airbus Model A310 Series Airplanes; comments due by 9-25-08; published 8-26-08 [FR E8-19715]
Airbus Model A330-200, A330-300, A340-300, A340-500, and A340-600 Series Airplanes; comments due by 9-25-08; published 8-26-08 [FR E8-19716]
BAE Systems (Operations) Limited Model BAe 146 and Avro 146 RJ Airplanes; comments due by 9-22-08; published 8-21-08 [FR E8-19364]
BAE Systems (Operations) Limited Model BAe 146 and Model Avro 146 RJ Airplanes; comments due by 9-25-08; published 8-26-08 [FR E8-19714]
Bell Helicopter Textron Canada Model 222, 222B, 222U, 230, and 430 Helicopters; comments due by 9-26-08; published 7-28-08 [FR E8-17261]
Boeing Model 737-100, -200, -200C, -300, -400,

and -500 Series Airplanes; comments due by 9-23-08; published 8-29-08 [FR E8-20102]

Boeing Model 757-200, 757-200PF, and 757-300 Series Airplanes; comments due by 9-22-08; published 8-7-08 [FR E8-18222]

Boeing Model 777 Airplanes; comments due by 9-22-08; published 8-7-08 [FR E8-18211]

Bombardier Model CL 600 2C10, CL 600 2D15, and CL 600 2D24 Airplanes; comments due by 9-25-08; published 8-26-08 [FR E8-19717]

Empresa Brasileira de Aeronautica S.A. (EMBRAER) Model ERJ 170 and ERJ 190 Airplanes; comments due by 9-22-08; published 8-21-08 [FR E8-19366]

General Electric Company CF34 1A, 3A, 3A1, 3A2, 3B, and 3B1 Turbofan Engines; comments due by 9-22-08; published 7-23-08 [FR E8-16884]

McDonnell Douglas Model DC-8-11, DC-8-12, DC-8-21, DC-8-31, DC-8-32, DC-8-33, DC-8-41, DC-8-42, and DC-8-43 Airplanes et al.; comments due by 9-23-08; published 8-29-08 [FR E8-20085]

McDonnell Douglas Model DC 8 11, DC 8 12, DC 8 21, DC 8 31, DC 8 32, DC 8 33, DC 8 41, DC 8 42, and DC 8 43 Airplanes et al.; comments due by 9-26-08; published 8-12-08 [FR E8-18560]

MD Helicopters, Inc. Model MD900 (including the MD902 Configuration) Helicopters; comments due by 9-26-08; published 7-28-08 [FR E8-17262]

Pratt & Whitney Canada (P&WC) JT15D 5; 5B; 5F; and 5R Turbofan Engines; comments due by 9-22-08; published 8-22-08 [FR E8-19390]

Saab Model SAAB 2000 Airplanes; comments due by 9-23-08; published 8-29-08 [FR E8-20088]

Special Conditions:

Airbus A318, A319, A320, and A321 series airplanes; Astronautics electronic flight bags with lithium battery installations; comments due by 9-22-08; published 8-7-08 [FR E8-18139]

**TRANSPORTATION DEPARTMENT**

**Federal Highway Administration**

Agency Information Collection Activities; Proposals, Submissions, and Approvals; comments due by 9-22-08; published 8-22-08 [FR E8-19326]

**TRANSPORTATION DEPARTMENT**

**Federal Motor Carrier Safety Administration**

Elimination of Route Designation Requirement for Motor Carriers Transporting Passengers over Regular Routes; comments due by 9-22-08; published 8-7-08 [FR E8-18173]

**TRANSPORTATION DEPARTMENT**

**Pipeline and Hazardous Materials Safety Administration**

Pipeline Safety:

Integrity Management Program for Gas Distribution Pipelines; comments due by 9-23-08; published 6-25-08 [FR 08-01387]

**TREASURY DEPARTMENT**

**Internal Revenue Service**

Capital Costs Incurred to Comply With EPA Sulfur Regulations; comments due by 9-25-08; published 6-27-08 [FR E8-14708]

Guidance for Determining the Basis of Property Acquired in Certain Nonrecognition Transactions; comments due by 9-22-08; published 6-24-08 [FR E8-14170]

**TREASURY DEPARTMENT**

Uniform Rules of Origin for Imported Merchandise; comments due by 9-23-08; published 7-25-08 [FR E8-17025]

## LIST OF PUBLIC LAWS

This is a continuing list of public bills from the current session of Congress which have become Federal laws. It may be used in conjunction with "P L U S" (Public Laws Update Service) on 202–741–6043. This list is also available online at *http://www.archives.gov/federal-register/laws.html*.

The text of laws is not published in the **Federal Register** but may be ordered in "slip law" (individual pamphlet) form from the Superintendent of Documents, U.S. Government Printing Office, Washington, DC 20402 (phone, 202–512–1808). The text will also be made available on the Internet from GPO Access at *http://www.gpoaccess.gov/plaws/index.html*. Some laws may not yet be available.

**H.R. 6532/P.L. 110–318**

To amend the Internal Revenue Code of 1986 to restore the Highway Trust Fund balance. (Sept. 15, 2008; 122 Stat. 3532)

**Last List September 3, 2008**

## Public Laws Electronic Notification Service (PENS)

**PENS** is a free electronic mail notification service of newly enacted public laws. To subscribe, go to *http://listserv.gsa.gov/archives/publaws-l.html*

**Note:** This service is strictly for E-mail notification of new laws. The text of laws is not available through this service. **PENS** cannot respond to specific inquiries sent to this address.