AUTHENTICATED
U.S. GOVERNMENT
INFORMATION
GPO

Federal Register

10–20–08 Monday
Vol. 73 No. 203 Oct. 20, 2008

Pages 62187–62434

The **FEDERAL REGISTER** (ISSN 0097–6326) is published daily, Monday through Friday, except official holidays, by the Office of the Federal Register, National Archives and Records Administration, Washington, DC 20408, under the Federal Register Act (44 U.S.C. Ch. 15) and the regulations of the Administrative Committee of the Federal Register (1 CFR Ch. I). The Superintendent of Documents, U.S. Government Printing Office, Washington, DC 20402 is the exclusive distributor of the official edition. Periodicals postage is paid at Washington, DC.

The **FEDERAL REGISTER** provides a uniform system for making available to the public regulations and legal notices issued by Federal agencies. These include Presidential proclamations and Executive Orders, Federal agency documents having general applicability and legal effect, documents required to be published by act of Congress, and other Federal agency documents of public interest.

Documents are on file for public inspection in the Office of the Federal Register the day before they are published, unless the issuing agency requests earlier filing. For a list of documents currently on file for public inspection, see *www.federalregister.gov.*

The seal of the National Archives and Records Administration authenticates the Federal Register as the official serial publication established under the Federal Register Act. Under 44 U.S.C. 1507, the contents of the **Federal Register** shall be judicially noticed.

The **Federal Register** is published in paper and on 24x microfiche. It is also available online at no charge as one of the databases on GPO Access, a service of the U.S. Government Printing Office.

The online edition of the **Federal Register** *www.gpoaccess.gov/nara,* available through GPO Access, is issued under the authority of the Administrative Committee of the Federal Register as the official legal equivalent of the paper and microfiche editions (44 U.S.C. 4101 and 1 CFR 5.10). It is updated by 6 a.m. each day the **Federal Register** is published and includes both text and graphics from Volume 59, Number 1 (January 2, 1994) forward.

For more information about GPO Access, contact the GPO Access User Support Team, call toll free 1-888-293-6498; DC area 202-512-1530; fax at 202-512-1262; or via e-mail at *gpoaccess@gpo.gov.* The Support Team is available between 7:00 a.m. and 9:00 p.m. Eastern Time, Monday–Friday, except official holidays.

The annual subscription price for the **Federal Register** paper edition is $749 plus postage, or $808, plus postage, for a combined **Federal Register, Federal Register** Index and List of CFR Sections Affected (LSA) subscription; the microfiche edition of the **Federal Register** including the **Federal Register** Index and LSA is $165, plus postage. Six month subscriptions are available for one-half the annual rate. The prevailing postal rates will be applied to orders according to the delivery method requested. The price of a single copy of the daily **Federal Register,** including postage, is based on the number of pages: $11 for an issue containing less than 200 pages; $22 for an issue containing 200 to 400 pages; and $33 for an issue containing more than 400 pages. Single issues of the microfiche edition may be purchased for $3 per copy, including postage. Remit check or money order, made payable to the Superintendent of Documents, or charge to your GPO Deposit Account, VISA, MasterCard, American Express, or Discover. Mail to: U.S. Government Printing Office—New Orders, P.O. Box 979050, St. Louis, MO 63197-9000; or call toll free 1-866-512-1800, DC area 202-512-1800; or go to the U.S. Government Online Bookstore site, see *bookstore.gpo.gov.*

There are no restrictions on the republication of material appearing in the **Federal Register.**

How To Cite This Publication: Use the volume number and the page number. Example: 73 FR 12345.

Postmaster: Send address changes to the Superintendent of Documents, Federal Register, U.S. Government Printing Office, Washington, DC 20402, along with the entire mailing label from the last issue received.

SUBSCRIPTIONS AND COPIES

PUBLIC

Subscriptions:

Paper or fiche	**202–512–1800**
Assistance with public subscriptions	**202–512–1806**
General online information	**202–512–1530; 1–888–293–6498**

Single copies/back copies:

Paper or fiche	**202–512–1800**
Assistance with public single copies	**1–866–512–1800 (Toll-Free)**

FEDERAL AGENCIES

Subscriptions:

Paper or fiche	**202–741–6005**
Assistance with Federal agency subscriptions	**202–741–6005**

FEDERAL REGISTER WORKSHOP

THE FEDERAL REGISTER: WHAT IT IS AND HOW TO USE IT

FOR: Any person who uses the Federal Register and Code of Federal Regulations.

WHO: Sponsored by the Office of the Federal Register.

WHAT: Free public briefings (approximately 3 hours) to present:

1. The regulatory process, with a focus on the Federal Register system and the public's role in the development of regulations.

2. The relationship between the Federal Register and Code of Federal Regulations.

3. The important elements of typical Federal Register documents.

4. An introduction to the finding aids of the FR/CFR system.

WHY: To provide the public with access to information necessary to research Federal agency regulations which directly affect them. There will be no discussion of specific agency regulations.

WHEN: Tuesday, October 28, 2008
9:00 a.m.–12:30 p.m.

WHERE: Office of the Federal Register
Conference Room, Suite 700
800 North Capitol Street, NW.
Washington, DC 20002

RESERVATIONS: (202) 741–6008

Printed on recycled paper.

Contents

Federal Register

Vol. 73, No. 203

Monday, October 20, 2008

Agricultural Marketing Service
PROPOSED RULES
Irish Potatoes Grown in Washington; Modification of Late Payment and Interest Charge Regulation, 62215–62218
Tomatoes Grown In Florida; Increased Assessment Rate, 62218–62220

Agriculture Department
See Agricultural Marketing Service
See Animal and Plant Health Inspection Service

Air Force Department
NOTICES
Non-Exclusive, Exclusive or Partially Exclusive Licensing of Invention, 62262

Animal and Plant Health Inspection Service
NOTICES
Availability of an Environmental Assessment and Finding of No Significant Impact:
Sirex Woodwasp, 62246–62247

Army Department
See Engineers Corps

Broadcasting Board of Governors
NOTICES
Meetings; Sunshine Act, 62247

Centers for Disease Control and Prevention
RULES
Medical Examination of Aliens; Revisions to Medical Screening Process, 62210–62211

Children and Families Administration
NOTICES
Meetings:
President's Committee for People with Intellectual Disabilities, 62297–62298

Coast Guard
PROPOSED RULES
Security Zone:
West Basin, Port Canaveral Harbor, Cape Canaveral, FL, 62235–62237

Commerce Department
See Foreign-Trade Zones Board
See Industry and Security Bureau
See International Trade Administration
See National Oceanic and Atmospheric Administration
See National Telecommunications and Information Administration
See Patent and Trademark Office
NOTICES
Agency Information Collection Activities; Proposals, Submissions, and Approvals, 62247–62248

Consumer Product Safety Commission
RULES
Standard for the Flammability of Clothing Textiles:
Correcting Amendments, 62187–62189

Court Services and Offender Supervision Agency for the District of Columbia
NOTICES
Senior Executive Service; Performance Review Board; Members, 62260

Defense Acquisition Regulations System
RULES
Defense Federal Acquisition Regulation Supplement:
Evaluation Factor for Use of Members of the Selected Reserve, 62211–62212
PROPOSED RULES
Defense Federal Acquisition Regulation Supplement:
Clarification of Central Contractor Registration and Procurement Instrument Identification Data Requirements, 62239–62241

Defense Department
See Air Force Department
See Defense Acquisition Regulations System
See Engineers Corps
NOTICES
Meetings:
Missile Defense Advisory Committee, 62260–62262

Education Department
NOTICES
Applications for New Awards (Fiscal Year 2009):
Office of Special Education and Rehabilitative Services (OSERS), 62263–62266

Employee Benefits Security Administration
RULES
Group Health Plans and Health Insurance Issuers Under Newborns' and Mothers' Health Protection Act, 62410–62429
NOTICES
Meetings:
Advisory Council on Employee Welfare and Pension Benefit Plans, 62320

Employees' Compensation Appeals Board
RULES
Rules of Procedure, 62190–62196

Employment and Training Administration
NOTICES
Amended Certification Regarding Eligibility to Apply for Worker Adjustment and Alternative Trade Adjustment Assistance:
Adjustment Assistance:
General Motors Corp.; Shreveport, LA, 62321
Metrologic Instruments; Blackwood, NJ, 62321
Determinations Regarding Eligibility to Apply for Worker Adjustment and Alternative Trade Adjustment Assistance, 62321–62323
Investigations Regarding Certifications of Eligibility to Apply for Worker Adjustment and Alternative Trade Adjustment Assistance, 62323–62324
Revised Determination on Reconsideration:
Sea Gull Lighting Products; Riverside, NJ, 62324–62325
Solicitation for Grant Applications (SGA):
Community-Based Job Training Grants, 62325

Termination of Investigation:
Northern Technologies; Spokane Valley, WA, 62325
Premier Manufacturing Support Services; Shreveport, LA, 62325

Employment Standards Administration
See Wage and Hour Division

Energy Department
See Federal Energy Regulatory Commission
See Southwestern Power Administration

Engineers Corps
NOTICES
Environmental Impact Statements; Availability, etc.:
Hamilton Wetland Restoration Project, Dredged Material Aquatic Transfer Facility in Marin County, CA, 62262

Environmental Protection Agency
PROPOSED RULES
National Emission Standards:
Halogenated Solvent Cleaning, 62384–62408
NOTICES
Proposed Agreement and Covenant Not to Sue Pursuant to the Comprehensive Environmental Response, Compensation, and Liability Act:
Elizabeth Mine Superfund Site, Located in Strafford and Thetford, VT, 62275

Federal Communications Commission
PROPOSED RULES
Television Broadcasting Services:
Danville, KY, 62238–62239
Huntsville, AL, 62237–62238
Omaha, NE, 62239
NOTICES
Radio Broadcasting Services:
AM or FM Proposals to Change the Community of License, 62275–62276

Federal Deposit Insurance Corporation
NOTICES
Meetings; Sunshine Act, 62276

Federal Election Commission
PROPOSED RULES
Increased Contribution and Coordinated Party Expenditure Limits for Candidates Opposing Self-financed Candidates, 62224–62229

Federal Emergency Management Agency
NOTICES
Compendium of Flood Map Changes, 62301–62302
Disaster Declarations:
Illinois, 62302
Indiana, 62302–62303
New Hampshire, 62303
Puerto Rico, 62303–62304

Federal Energy Regulatory Commission
PROPOSED RULES
Mandatory Reliability Standards for Critical Infrastructure Protection, 62229
NOTICES
Combined Notice of Filings, 62266–62268
Meeting, Vote, Explanation of Action Closing Meeting and List of Persons to Attend, 62268–62269

Federal Highway Administration
NOTICES
Publication of Final Guidance on the Congestion Mitigation and Air Quality Improvement (CMAQ) Program, 62362–62379

Federal Housing Financing Agency
NOTICES
Federal Home Loan Bank Members Selected for Community Support Review, 62276–62293

Federal Reserve System
NOTICES
Change in Bank Control Notices; Acquisition of Shares of Bank or Bank Holding Companies, 62293–62294
Formations of, Acquisitions by, and Mergers of Bank Holding Companies, 62294
Proposals to Engage in Permissible Nonbanking Activities or to Acquire Companies that are Engaged in Permissible Nonbanking Activities, 62294

Federal Trade Commission
NOTICES
Granting of Request for Early Termination of the Waiting Period Under the Premerger Notification Rules, 62294–62296

Fish and Wildlife Service
NOTICES
Final Comprehensive Conservation Plan and Finding of No Significant Impact; Availability:
Lake Woodruff National Wildlife Refuge, Lake and Volusia Counties, Florida, 62305
Proposed Candidate Conservation Agreement with Assurances for the Black-tailed Prairie Dog, Mountain Plover, Burrowing Owl, and Ferruginous Hawk for the 4W, 62305–62307
Proposed Low Effect Habitat Conservation for West Colton Terminal Temporary Ethanol Transloading Facility, City of Rialto, County of San Bernardino, CA, 62307–62308
Proposed Otay Water District Low Effect Habitat Conservation Plan for the Quino Checkerspot Butterfly and Coastal California Gnatcatcher, 62308–62310
TakeMeFishing.org Website Advertising Guidelines, 62310–62312

Food and Drug Administration
NOTICES
Draft Guidance for Industry on Tropical Disease Priority Review Vouchers; Availability, 62298–62299

Foreign-Trade Zones Board
NOTICES
Approval for Expansion of Subzone 50I, Ultramar Inc. (Oil Refinery), Wilmington, CA, 62248

Health and Human Services Department
See Centers for Disease Control and Prevention
See Children and Families Administration
See Food and Drug Administration
See National Institutes of Health
RULES
Group Health Plans and Health Insurance Issuers Under Newborns' and Mothers' Health Protection Act, 62410–62429
NOTICES
Committees; Establishment, Renewal, Termination, etc.:
National Vaccine Advisory Committee, 62296–62297

Meetings:
National Biodefense Science Board, 62297

Homeland Security Department
See Coast Guard
See Federal Emergency Management Agency
See Transportation Security Administration
PROPOSED RULES
Privacy Act of 1974:
Implementation of Exemptions; Grievances, Appeals, and Disciplinary Action System of Records, 62214–62215

Industry and Security Bureau
NOTICES
Announcement of Performance Review Board Members, 62248

Interior Department
See Fish and Wildlife Service
See Land Management Bureau
See National Park Service
See Reclamation Bureau

Internal Revenue Service
RULES
Group Health Plans and Health Insurance Issuers Under Newborns' and Mothers' Health Protection Act, 62410–62429
Section 1367 Regarding Open Account Debt, 62199–62203
Unified Rule for Loss on Subsidiary Stock:
Correcting Amendment, 62204–62205
Correction, 62203–62204

International Trade Administration
NOTICES
Announcement of Performance Review Board Members, 62249
Antidumping:
Chlorinated Isocyanurates from China, 62249–62250
Cut-to-Length Carbon Steel Plate from China, 62250–62252
Sodium Metal from France, 62252–62255
Information and Communication Technologies; Request for Public Comment, 62255–62256

International Trade Commission
NOTICES
Investigations:
Ball Bearings from Japan and the United Kingdom, 62317–62318
Certain Frozen Fish Fillets from Vietnam, 62318
Crawfish Tail Meat from China, 62318–62319

Labor Department
See Employee Benefits Security Administration
See Employees' Compensation Appeals Board
See Employment and Training Administration
See Labor Statistics Bureau
See Occupational Safety and Health Administration
See Wage and Hour Division
NOTICES
Agency Information Collection Activities; Proposals, Submissions, and Approvals, 62319–62320
Meetings:
Advisory Committee on Job Corps, 62320

Labor Statistics Bureau
NOTICES
Agency Information Collection Activities; Proposals, Submissions, and Approvals, 62325–62326

Land Management Bureau
NOTICES
Alaska Native Claims Selection, 62312–62313
Filing of Plats of Survey:
Oregon/Washington, 62313

Maritime Administration
NOTICES
Agency Information Collection Activities; Proposals, Submissions, and Approvals, 62379–62380

Morris K. Udall Scholarship and Excellence in National Environmental Policy Foundation
NOTICES
Agency Information Collection Activities; Proposals, Submissions, and Approvals, 62339–62340

National Archives and Records Administration
NOTICES
Temporary Change in Hours at Central Plains Regional Archives, Kansas City, MO., 62340–62341

National Credit Union Administration
NOTICES
Agency Information Collection Activities; Proposals, Submissions, and Approvals, 62341

National Institutes of Health
NOTICES
Meetings:
National Cancer Institute, 62299–62300
National Center for Complementary and Alternative Medicine, 62300
National Eye Institute, 62300–62301
National Institute of Neurological Disorders and Stroke, 62301

National Oceanic and Atmospheric Administration
RULES
Fisheries of the Exclusive Economic Zone Off Alaska:
Hook-and-Line Gear in the Gulf of Alaska, 62212–62213
PROPOSED RULES
Fisheries of the Exclusive Economic Zone Off Alaska:
Revisions to the Pollock Trip Limit Regulations in the Gulf of Alaska, 62241–62245
NOTICES
Agency Information Collection Activities; Proposals, Submissions, and Approvals, 62256–62257
Endangered and Threatened Species; Recovery Plan for White Abalone, 62257–62258

National Park Service
NOTICES
National Register of Historic Places; Notification of Pending Nominations and Related Actions, 62313–62314

National Science Foundation
NOTICES
Permit Applications Received Under the Antarctic Conservation Act of 1978 (P.L. 95-541), 62341
Permits Issued Under the Antarctic Conservation Act of 1978 (P.L. 95-541), 62341–62342

National Telecommunications and Information Administration

NOTICES
Docket No. 0810141353 - 81354 - 01
Public Telecommunications Facilities Program: Closing Date, 62258–62259

Nuclear Regulatory Commission
PROPOSED RULES
Denial of Petition for Rulemaking:
Thomas E. Magette on Behalf of EnergySolutions, LLC, 62220–62224
NOTICES
Atomic Safety and Licensing Board Panel Hearing:
Tennessee Valley Authority, 62342–62343
Environmental Assessment and Finding of No Significant Impact:
Firstenergy Nuclear Operating Co. et al., 62343–62344

Occupational Safety and Health Administration
NOTICES
Nationally Recognized Testing Laboratories; Suppliers Declaration of Conformity, 62327–62339

Patent and Trademark Office
NOTICES
Grant of Interim Extension of the Term of U.S. Patent No. 4,919,140; Andara OFS System, 62260

Reclamation Bureau
NOTICES
Privacy Act; Systems of Records, 62314–62317

Securities and Exchange Commission
NOTICES
Program for Allocation of Regulatory Responsibilities:
American Stock Exchange LLC, et al., 62344–62350
Self-Regulatory Organizations; Proposed Rule Changes:
Chicago Board Options Exchange, Inc., 62350–62352
New York Stock Exchange LLC, 62352–62354
NYSE Arca, Inc., 62354–62358

Small Business Administration
NOTICES
Disaster Declarations:
Oklahoma, 62359
Puerto Rico, 62359

Southwestern Power Administration
NOTICES
Integrated System Rate Schedule Changes, 62269–62275

State Department
RULES
Board of Appellate Review; Review of Loss of Nationality, 62196–62197
Uncertified Foreign Health-Care Workers, 62197–62198
NOTICES
Agency Information Collection Activities; Proposals, Submissions, and Approvals, 62359–62361
Delegation by the Secretary of State to the Under Secretary for Arms Control and International Security of Authorities, 62361–62362

Surface Transportation Board
NOTICES
Meetings:
Rail Energy Transportation Advisory Committee, 62380

Thrift Supervision Office
NOTICES
Agency Information Collection Activities; Proposals, Submissions, and Approvals, 62380–62382

Transportation Department
See Federal Highway Administration
See Maritime Administration
See Surface Transportation Board

Transportation Security Administration
NOTICES
Agency Information Collection Activities; Proposals, Submissions, and Approvals, 62304–62305

Treasury Department
See Internal Revenue Service
See Thrift Supervision Office
RULES
TARP Capital Purchase Program, 62205–62210

Wage and Hour Division
PROPOSED RULES
Protecting the Privacy of Workers:
Labor Standards Provisions Applicable to Contracts Covering Federally Financed and Assisted Construction, 62229–62234

Separate Parts In This Issue

Part II
Environmental Protection Agency, 62384–62408

Part III
Health and Human Services Department; Labor Department, Employee Benefits Security Administration; Treasury Department, Internal Revenue Service, 62410–62429

Reader Aids
Consult the Reader Aids section at the end of this issue for phone numbers, online resources, finding aids, reminders, and notice of recently enacted public laws.

To subscribe to the Federal Register Table of Contents LISTSERV electronic mailing list, go to http://listserv.access.gpo.gov and select Online mailing list archives, FEDREGTOC-L, Join or leave the list (or change settings); then follow the instructions.

CFR PARTS AFFECTED IN THIS ISSUE

A cumulative list of the parts affected this month can be found in the Reader Aids section at the end of this issue.

3 CFR

Administrative Orders:

Notices:

Notice of October 16, 2008 62433

6 CFR

Proposed Rules:

5 62214

7 CFR

Proposed Rules:

946 62215

966 62218

10 CFR

Proposed Rules:

50 62220

11 CFR

Proposed Rules:

100 62224

101 62224

102 62224

104 62224

110 62224

113 62224

116 62224

400 62224

9001 62224

9003 62224

9031 62224

9033 62224

9035 62224

16 CFR

1610 62187

18 CFR

Proposed Rules:

40 62229

20 CFR

501 62190

22 CFR

7 62196

40 62197

50 62196

26 CFR

1 (3 documents) 62199, 62203, 62204

54 62410

29 CFR

2590 62410

Proposed Rules:

3 62229

5 62229

31 CFR

30 62205

33 CFR

Proposed Rules:

165 62235

40 CFR

Proposed Rules:

63 62384

42 CFR

34 62210

45 CFR

144 62410

146 62410

148 62410

47 CFR

Proposed Rules:

73 (3 documents) 62237, 62238, 62239

48 CFR

215 62211

252 62211

Proposed Rules:

204 62239

217 62239

50 CFR

679 62212

Proposed Rules:

679 62241

Rules and Regulations

Federal Register

Vol. 73, No. 203

Monday, October 20, 2008

This section of the FEDERAL REGISTER contains regulatory documents having general applicability and legal effect, most of which are keyed to and codified in the Code of Federal Regulations, which is published under 50 titles pursuant to 44 U.S.C. 1510.

The Code of Federal Regulations is sold by the Superintendent of Documents. Prices of new books are listed in the first FEDERAL REGISTER issue of each week.

CONSUMER PRODUCT SAFETY COMMISSION

16 CFR Part 1610

Standard for the Flammability of Clothing Textiles; Corrections

AGENCY: Consumer Product Safety Commission.

ACTION: Correcting amendments.

SUMMARY: The U.S. Consumer Product Safety Commission published in the **Federal Register** of March 25, 2008, a final rule amending its flammability standard for general wearing apparel, the Standard for the Flammability of Clothing Textiles, 16 CFR Part 1610. The published rule contained some incorrect typographical symbols and other inadvertent errors. This document corrects those symbols and errors.

DATES: Effective on October 20, 2008.

FOR FURTHER INFORMATION CONTACT: Mary Toro, Directorate for Compliance and Field Operations, Consumer Product Safety Commission, 4330 East West Highway, Bethesda, Maryland 20814–4408; telephone (301) 504–7586; e-mail *mtoro@cpsc.gov*.

SUPPLEMENTARY INFORMATION: The U.S. Consumer Product Safety Commission published in the **Federal Register** of March 25, 2008, (73 FR 15636) an amendment to the Standard for the Flammability of Clothing Textiles, 16 CFR Part 1610. As published, the rule contained some incorrect typographical symbols and inadvertent technical errors in the text and drawings. This document corrects those symbols and errors.

List of Subjects in 16 CFR part 1610

Clothing, Consumer protection, Flammable materials, Incorporation by reference, Reporting and recordkeeping requirements, Textiles, Warranties.

■ Accordingly, 16 CFR part 1610 is corrected by making the following correcting amendments:

PART 1610—STANDARD FOR THE FLAMMABILITY OF CLOTHING TEXTILES

■ 1. The authority citation for part 1610 continues to read as follows:

Authority: 15 U.S.C. 1191–1204.

■ 2. Revise the last sentence of paragraph (a)(1)(vii) of § 1610.5 to read as follows:

§ 1610.5 Test apparatus and materials.

(a) * * *

(1) * * *

(vii) * * * The weight shall be 30g ± 5g (1.16 oz. ± 0.18 oz).

* * * * *

■ 3. Amend § 1610.6 as follows:

■ a. In paragraph (a)(3)(v) remove the word ''dessicant'' and add, in its place ''desiccant''.

■ b. Revise paragraph (b)(1)(ii) to read as follows:

§ 1610.6 Test procedure.

* * * * *

(b) * * *

(1) * * *

(ii) *Laundering procedure*. The sample, after being subjected to the dry cleaning procedure, shall be washed and dried one time in accordance with sections 8.2.2, 8.2.3 and 8.3.1(A) of AATCC Test Method 124–2006 ''Appearance of Fabrics after Repeated Home Laundering'' (incorporated by reference at § 1610.6(b)(1)(B)(iii)). Washing shall be performed in accordance with sections 8.2.2 and 8.2.3 of AATCC Test Method 124–2006 using AATCC 1993 Standard Reference Detergent, powder and wash water temperature (IV) (120° ± 5 °F; 49° ± 3 °C) specified in Table II of that method, and the water level, agitator speed, washing time, spin speed and final spin cycle specified for ''Normal/Cotton Sturdy'' in Table III of that method. A maximum wash load shall be 8 pounds (3.63 kg) and may consist of any combination of test samples and dummy pieces. Drying shall be performed in accordance with section 8.3.1(A) of that test method, Tumble Dry, using the exhaust temperature (150° ± 10 °F; 66° ± 5 °C) and cool down time of 10 minutes specified in the ''Durable Press'' conditions of Table IV.

* * * * *

■ 3. Revise Figure 6 to Part 1610 as follows:

Figure 6 to Part 1610 An Example of a Typical Igniter

BILLING CODE 6355–01–P

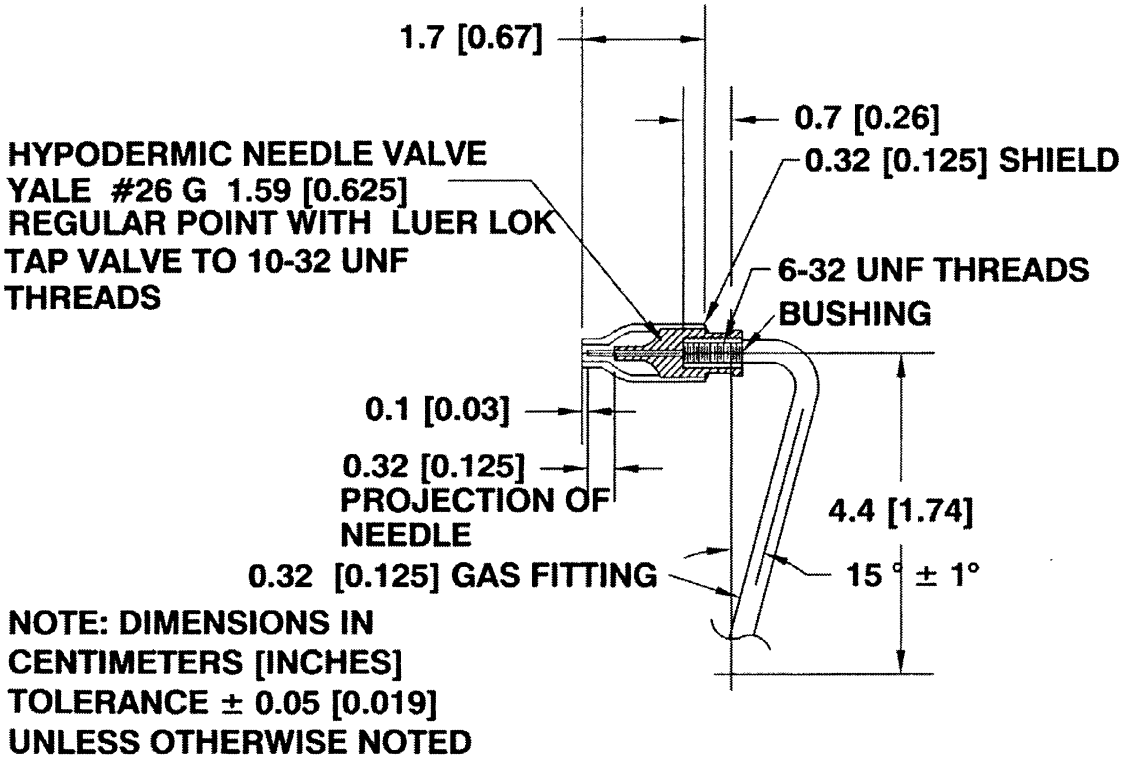

AN EXAMPLE OF A TYPICAL IGNITER
FIGURE 6

■ 4. Revise Figure 9 to Part 1610 as follows:

Figure 9 to Part 1610 An Example of a Typical Brushing Device Template

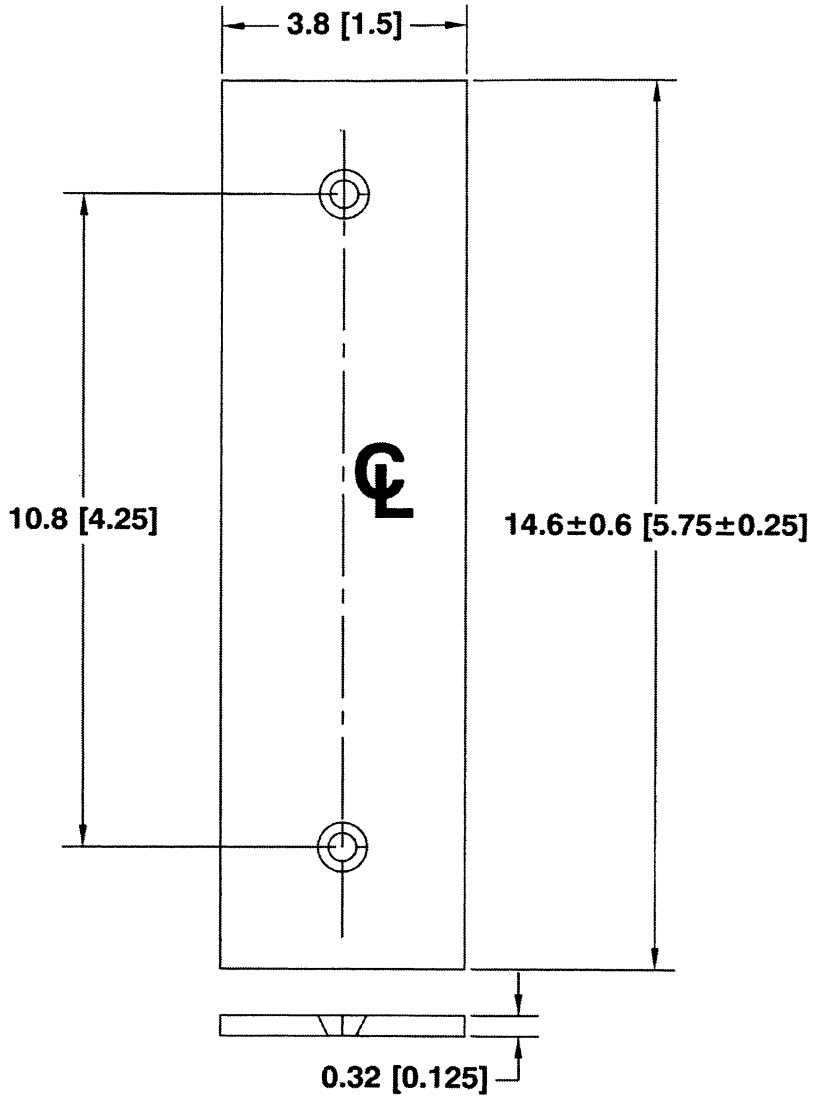

NOTES:

1. TWO HOLES Ø 0.16 [0.0625] COUNTERSINK FOR FLAT HEAD SCREW
2. DIMENSIONS IN CENTIMETERS [INCHES]
3. TOLERANCE ± 0.05 [0.019] UNLESS OTHERWISE NOTED

AN EXAMPLE OF A TYPICAL BRUSHING DEVICE TEMPLATE FIGURE 9

Dated: October 10, 2008.

Todd A. Stevenson,

Secretary, Consumer Product Safety Commission.

[FR Doc. E8–24712 Filed 10–17–08; 8:45 am]

BILLING CODE 6355–01–C

DEPARTMENT OF LABOR

Employees' Compensation Appeals Board

20 CFR Part 501

RIN 1290–AA22

Rules of Procedure

AGENCY: Employees' Compensation Appeals Board, Labor.

ACTION: Final rule.

SUMMARY: The Department of Labor (DOL or Department) is publishing this final rule to update the regulations providing for appeals before the Employees' Compensation Appeals Board (Board). The Board has jurisdiction over appeals arising under the Federal Employees' Compensation Act (FECA). 5 U.S.C. 8149. This final rule updates the rules and guidance to all federal employees who seek to appeal from the decisions of the Office of Workers' Compensation Programs (OWCP) under FECA.

DATES: These regulations are effective November 19, 2008. These regulations are applicable to all Board appeals filed from OWCP decisions issued on and after November 19, 2008.

FOR FURTHER INFORMATION CONTACT: Alec J. Koromilas, Chairman and Chief Judge, Employees' Compensation Appeals Board, 200 Constitution Avenue, NW., Room S–5220, Washington, DC 20210; e-mail *contact-oas@dol.gov*; Telephone (202) 693–6406 (voice) (this is not a toll-free number). Individuals with hearing or speech impairments may access the telephone number above via TTY by calling the toll-free Federal Information Relay Service at (800) 877–8339.

SUPPLEMENTARY INFORMATION:

I. Current Regulations and Rulemaking History

This rule implements updates and revisions to the Rules of Procedure for practice before the Employees' Compensation Appeals Board (Board). The Board was created by the Reorganization Plan No. 2 of 1946 and transferred to the Department of Labor in 1950 by Reorganization Plan No. 19 of 1950. *See* 5 U.S.C. 8145 notes. Under the Federal Employees' Compensation Act (FECA), the Secretary of Labor must provide for an Employees' Compensation Appeals Board ''* * * with the authority to hear and, subject to applicable law and the rules and regulations of the Secretary, make final decisions on appeals taken from determinations and awards with respect to claims of employees.'' 5 U.S.C. 8149.

On June 20, 2008, the Board published a Notice of Proposed Rulemaking (NPRM), 73 FR 35102, proposing the first major revisions to its rules of procedure in 46 years.

This final rule adopts, for the most part, the provisions that were proposed in the June 20, 2008 NPRM. A few provisions have been modified in response to public comments, and a few additional edits have been made to clarify text, correct typographical errors, or make style consistent. A total of ten timely comments were received, two of which were later withdrawn by the commenter. Additionally, one untimely comment was received one day past the comment deadline. The discussion below in Section II, Section-By-Section Analysis of Comments and Revisions, identifies the significant issues raised in non-withdrawn comments, provides the Board's responses to those comments, and explains any resulting changes to the proposed rule. Except as specifically addressed in the Section-by-Section Analysis, the final rule adopts the proposed provisions and reasoning explained in the June 20, 2008 NPRM.

II. Section-by-Section Analysis of Comments and Revisions

Section 501.1 Definitions

This section defines selected terms in this rule. The NPRM proposed to replace the term ''party'' with the terms ''Director,'' ''Appellant'' and ''Representative'' in paragraphs (f), (g), and (h). The NPRM also proposed to incorporate the definition of ''counsel'' into the definition of ''Representative'' in the proposed paragraph (h). One comment was received regarding section 501.1 the day after the comment period closed. This comment, however, has been considered. The commenter, who described himself as a tribal court judge who also represents claimants before the Board, expressed concern that the breadth of the definition of counsel and attorney in subsection (h) was too narrow to include all attorneys in good standing to provide representation to claimants, and in particular to include members of tribal bars or those admitted to practice before tribal courts. To clarify this definition, and to specifically include the tribal bar and tribal court members referenced by the comment, the Board has amended the definition of representative in section 501.1(h) to include any individual ''who is admitted to practice and is in good standing with any court of competent jurisdiction.'' The language in section 501.9(a)(1) has been similarly revised for consistency in this rule.

No other comments were received regarding section 501.1, and in all other respects (except for grammatical corrections to subsections (h) and (j)), section 501.1 is adopted as proposed in the NPRM and for the reasons identified in the NPRM.

Section 501.2 Scope and Applicability of Rules; Compensation and Jurisdiction of the Board

The NPRM proposed clarifications and updates to this section. No comments were received concerning section 501.2. Accordingly, section 501.2 is adopted in the final rule as proposed for the reasons identified in the NPRM.

Section 501.3 Notice of Appeal

Section 501.3 clarifies the requirements for a Notice of Appeal. Four comments were received regarding this section.

Paragraph (e) to the NPRM proposed that 180 days would be provided for the filing of all appeals, regardless of where the Appellant lives. The 180 day filing window is a change from the current rule, which provides a filing window of 90 days for persons living in the United States or Canada, and 180 days for persons living outside the United States or Canada. Additionally, paragraph (e) proposed that should compelling circumstances prevent an Appellant from meeting this 180-day limitation, the Board would have retained discretion to extend this time period, but only on specific application to the Board and upon satisfactory demonstration of ''compelling circumstances.''

An administrative law representative who appears before the Board requested clarification regarding whether ''the time limitation of an automatic one year for filing [an appeal before the Board] is to be discontinued.'' The current regulation at 20 CFR 501.3(d)(2) does not provide an ''automatic'' one-year time period to file an appeal with the Board. Rather, it provides that, ''[f]or good cause shown,'' the Board in its discretion may waive a failure to appeal within the current 90 or 180 day window, ''but for no longer than one year from the date of issuance of the final decision of the Director.'' The NPRM acknowledged that the ''good cause'' standard has not been enforced in practice, and stated that the proposed new standard was intended to provide an ''objective standard'' as a substitute. By defining compelling circumstances as those circumstances beyond the Appellant's control, by explicitly stating that compelling circumstances do not include ''any delay caused by the failure

of an individual to exercise due diligence in submitting a notice of appeal,'' and by stating that appeals ''must'' be filed within 180 days, the NPRM proposed a new rule of procedure that would depart from and supersede any past practice in this area. To further address this comment, the Board has more fully articulated that compelling circumstances mean circumstances beyond the Appellant's control ''that prevent the timely filing of an appeal,'' expanding the language of the final rule to demonstrate that ''compelling circumstances'' is meant to represent a more stringent standard than under the current rule. For example, ''compelling circumstances'' could include a medical condition that renders the Appellant incompetent or military service in a war zone that prevents the timely filing of an appeal. Therefore, any past practice of effectively providing one year for filing an appeal by not enforcing the regulatory requirement that Appellants show good cause for failure to file within 90 days is discontinued by this final rule.

Another individual commented that 90 days is ample time for the filing of an appeal worldwide and that to provide a 180-day appeal window further overburdens an already overburdened system. As just discussed, the Board's changes to this regulation discontinue the current practice of generally permitting one year for filing appeals. Thus adoption of a uniform 180-day timeframe will effectively reduce the time to appeal, which is the practical result sought by the commenter, while still giving claimants and their representatives adequate time to file an appeal. The Board believes that a 180-day time limit to appeal an OWCP decision strikes the appropriate balance between the 90-day and one-year periods provided by the combination of the current rules and current practice, creating a more efficient uniform time frame and still providing ample time for all claimants to exercise their appellate rights.

The commenter also recommended that the Board provide a clear statement that its decisions are final. We have considered this comment, but have not changed the rule in the manner requested, because 5 U.S.C. 8149 of the FECA clearly states that the decisions of the Board are final.

Section 501.3(f) proposed amending the date of filing requirements. The proposed language acknowledged that Appellants could file appeals using commercial delivery services or the U.S. Postal Service, but provided that the date of receipt by the Clerk would be used to determine timeliness in all cases except where USPS mailing services were used. In that circumstance, the Board would continue to look to the date of mailing to establish timeliness if the date of receipt by the Clerk would make the appeal untimely. An administrative law representative questioned this differentiation in treatment between documents delivered by USPS and other commercial carriers, contending that tracking documentation can also be provided when commercial carriers are used. The Board has considered the points raised by this comment and has revised subsection (f)(1) in the final rule to provide that documentation from either the USPS or a commercial carrier can be used to determine whether the appeal is timely. A USPS postmark or ''other carriers' date markings'' will be considered only where an appeal is addressed and sent directly to the Board as set forth in these rules; this provision does not apply where Board appeals are mistakenly sent to an improper place (for example, OWCP, Congressional offices, and the employing agency). Where the Board has received appeals by any method other than USPS or commercial carrier, the Clerk's receipt will be used to determine timeliness.

Paragraph (h) in the NPRM proposed to amend the procedures used by the Clerk upon receipt of an incomplete appeal and clarify that it is the Clerk who will specify a reasonable time for an Appellant to submit all required information missing from an appeal. A comment by the administrative law representative expressed concern that ''reasonable time'' is not adequately defined, and sought a more specific definition to insure there would be no abuse of discretion. While the Board considered this comment, the Board determined that the procedures proposed in the NPRM are reasonable and adequate. The Board did not set a fixed time for submission of missing information because the scope and volume of missing information varies, and the Board intends to allow the Clerk flexibility to work with Appellants to perfect their appeals, or clarify the status of their appeal requests.

After reviewing all the comments regarding section 501.3, the Board has revised § § 501.3(e) and (f)(1) as noted above, and included minor language changes to this section to create consistency in style or clarify the text. In all other respects, section 501.3 is adopted as proposed and justified in the NPRM.

Section 501.4 Case Record; Inspection; Submission of Pleadings and Motions

Section 501.4 contains clarifications regarding inspection of the Board's docket and the procedures for submitting pleadings and motions for consideration by the Board during the pendency of an appeal. No comments were received regarding this section. Accordingly, section 501.4 is adopted in the final rule as proposed.

Section 501.5 Oral Argument

Section 501.5, in its current and proposed form, contains the procedures for requesting and conducting oral arguments. The NPRM in paragraph (a) provided that the granting of oral argument is within the discretion of the Board and not automatically scheduled upon the request of an Appellant or the Director. A Federal employee objected to this change in the availability of oral argument, contending that this would be a ''serious diminishment in a basic tenant [sic] in our adversarial system'' for federal employees who bring their appeals before the Board. Contrary to the view expressed in this comment, proceedings under the FECA are not adversarial in nature. See, e.g., *Owens* v. *Brock,* 860 F.2d 1363, 1367 (6th Cir. 1988); *William B. Webb,* 56 ECAB 156, 159 (2004); *Norman M. Perras,* 49 ECAB 191, 193(1997); *see also* 20 CFR 10.11(b). While the Board acknowledges that oral argument in some instances can provide the Board valuable assistance in addressing and evaluating the issues presented on appeal, the Board has concluded that the automatic availability of oral argument on request of an Appellant or the Director is not always necessary. To best use Board resources, this final rule provides the opportunity for Appellants to request oral argument should their case present, for example, an issue not previously considered by the Board, or a perceived conflict between Board decisions on similar issues. Appellants seeking oral argument must follow the procedure in § 501.5(b) to identify the need for oral argument.

After reviewing the above comment, the Board has determined that no changes are necessary to the language proposed for this section. Accordingly, section 501.5 is adopted in the final rule as proposed in the NPRM.

Section 501.6 Decisions and Orders

This section contains the Board's practice in the issuance of decisions and orders. No comments were received regarding this section. Accordingly, section 501.6 is adopted in the final rule as proposed.

Section 501.7 Petition for Reconsideration

Section 501.7 provides the Board's practice and procedures regarding requests for reconsideration. No comments were received regarding this section. Accordingly, section 501.7 is adopted in the final rule as proposed.

Section 501.8 Clerk of the Office of the Appellate Boards; Docket of Proceedings; Records

Section 501.8 provides information regarding the Clerk's office, the docket and record maintained by the Board. No comments were received regarding this section. Accordingly, section 501.8 is adopted in the final rule as proposed.

Section 501.9 Representation; Appearances and Fees

Section 501.9 incorporates and expands upon who may represent a claimant before the Board, and what fees they may charge. In the NPRM, subsection (a)(1) defined counsel as ''an attorney who has been admitted to practice before the Supreme Court of the United States or the highest court of any state, the District of Columbia, or a United States territory and who is in good standing with that bar.'' The commenter, who described himself as a tribal court judge who also acts as a claimant's representative, expressed concern that the definition of ''counsel'' was too narrow. For the reasons discussed in relation to 501.1, the Board has amended the definition of representative in section 501.9(a)(1) to include any individual ''who is admitted to practice and is in good standing with any court of competent jurisdiction.'' The NPRM and this final rule allow an Appellant to be represented in a proceeding before the Board not only by an attorney, but alternatively by a lay representative.

A commenter who represented Appellants before the Board urged the Board to expand the definition of counsel under subsection (a) to include ''law firms instead of limiting representation purely to individual attorneys.'' The commenter noted that an expanded definition of representative will make it easier for law firms to continue representation when a designated attorney is ill, on vacation, or otherwise unavailable. The Board considered this comment but does not believe that a change in the language of the rule is necessary. The Board recognizes that if the representative of record is a member of a law firm, the representative may look to another member of his or her firm to provide services, particularly if the representative is temporarily unavailable. Nothing in this rule prevents this practice.

Another comment received from an administrative law representative questioned whether the statement in subsection (a)(2) that a lay representative ''may be an accredited Representative of an employee organization'' was intended to exclude all others from the role of ''Law Representatives'' authorized by the rule. It was not. The referenced language merely provides an example of one type of lay representative that may appear before the Board. The first sentence in subsection (a)(2)—''A non-attorney Representative may represent an Appellant before the Board''—is all inclusive and does not restrict an Appellant from representation by anyone of his or her choosing.

Proposed § 501.9(e) clarified the requirements regarding review of all fee applications to ensure that Appellants are aware of and understand the mandatory requirement for Board consideration and approval of any Representative or attorney fee. A representative who practices before the Board contended that the language ''in connection with a proceeding before the Board'' is misleading. Arguing that all proceedings following an appeal to the Board have a ''connection'' with the Board, this commenter questioned whether the Board intended to review all fee requests, even for work before the OWCP following disposition of an appeal. The Board does not. Approval of fee requests for representative services before OWCP must be submitted directly to OWCP for consideration under OWCP's own regulations (see 20 CFR Part 10) and are not the subject of this rule. To ensure that this intent is clearly articulated in this subsection, the Board has revised the language in the final rule to read ''performed on appeal before the Board.''

Paragraph (e) also expands the list of factors that the Board will evaluate when reviewing fee requests. One commenter questioned the meaning of ''de minimis'' in regard to the Board's consideration of fees charged, contending that the term is vague and undefined. Determinations regarding what fees constitute ''de minimis'' charges will be made on a case-by-case basis with the understanding that the term ''de minimis'' connotes a minimal or nominal fee. *See, e.g., Black's Law Dictionary,* 464 (8th ed. 2004). For example, if an attorney charged a nominal flat-rate fee for all of his or her services before the Board, the fee request would not be denied by the Board solely because it lacked an hourly breakdown. Appeals brought before the Board vary widely in complexity as well as the extent of representation provided to Appellants. Customary charges also vary by locality and the expertise the representative provides. The final rule therefore provides for this process and specifies that all fees proposed by any representative with respect to an appeal must be filed with the Board for consideration and approval.

The commenter also advocated that the Board utilize the provisions of 38 U.S.C. 5904, which recognizes a 20% contingency fee as reasonable in veterans' cases before the Department of Veterans Affairs (VA). The commenter further contended that the requirement to submit fee requests for the Board's approval is ''discriminatory'' in that it sets a different fee review policy than utilized by the VA. Review and approval by the Secretary of Labor of fee requests are specifically required by FECA. The provisions of 5 U.S.C. 8127 are controlling in consideration of representative fees in appeals brought before the Board under FECA. That provision specifies that ''(a) A claimant may authorize an individual to represent him in any proceeding under this subchapter before the Secretary of Labor. (b) A claim for legal or other services furnished in respect to a case, claim, or award for compensation under this subchapter is valid only if approved by the Secretary.'' The Board has found that the use of contingency fees by attorneys handling FECA claims before OWCP is not in keeping with section 8127. In *Angela M. Sanden,* Docket No. 04–1632 (issued September 20, 2004), the representative's contingency fee arrangement was held to be illegal, and the representative directed to calculate the money owed for services rendered on an hourly basis. Furthermore, the provisions of FECA are controlling for fees resulting from Board proceedings, not those governing another Federal agency whose decisions are not binding on the Board. *Hazelee K. Anderson*, 37 ECAB 277 (1986). Thus, no changes to the final rule have been made as a result of the Board's consideration of this comment.

Another claimant's representative who appears before the Board commented that section 501.9 should be expanded to allow for law firms to bill for the services of paralegals and other experts, to supplement and support the work of the individual identified as the Appellant's Representative of record. These charges, as well as related services, are among those envisioned in FECA as ''other services furnished in respect to a case, claim or award'' under 5 U.S.C. 8127(b), as they are specifically

performed and billed for work on the individual case for which a fee approval is requested by an attorney or a lay representative. The Board will consider such fee requests for work performed on appeal under subsection (e)(5), which allows consideration of ''customary local charges.''

In addition to the revisions discussed above to section 501.9, the text of subsection (d) was clarified to address an internal inconsistency in the NPRM. In all other respects, the final rule is identical to the rule proposed in the NPRM.

III. Regulatory Procedures

Executive Order 12866

The Department is issuing this final rule in conformance with Executive Order 12866. The Department has determined that this rule does not materially alter the budgetary impact of entitlements, grants, user fees, or loan programs; nor will it have an annual effect on the economy of $100 million or more; nor will it adversely affect the economy, a sector of the economy, productivity, competition, jobs, the environment, public health or safety, or State, local or tribal governments or communities in any material way. Furthermore, it does not raise a novel legal or policy issue arising out of legal mandates, the President's priorities or the principles set forth in the Executive Order. This rulemaking is therefore not significant under Executive Order 12866.

Regulatory Flexibility Act of 1980

This final rule has been thoroughly reviewed in accordance with the Regulatory Flexibility Act of 1980, as amended by the Small Business Regulatory Enforcement Fairness Act of 1996, 5 U.S.C. 601–612. The Department has determined that the final rule does not involve any regulatory and informational requirements regarding businesses, organizations, and governmental jurisdictions subject to regulation.

Paperwork Reduction Act (PRA)

The Department has determined that this rule is not subject to the requirements of the Paperwork Reduction Act, 44 U.S.C. 3501 *et seq.,* as this rulemaking involves administrative actions to which the Federal government is a party and that occur after an administrative case file has been opened regarding a particular individual. *See* 5 CFR 1320.4(a)(2), (c).

Unfunded Mandates Reform

Unfunded Mandates Reform Act of 1995—This rule does not include any Federal mandate that may result in increased expenditures by State, local, and tribal governments, in the aggregate, of $100 million or more, or increased expenditures by the private sector of $100 million or more.

Executive Order 12875—This rule does not create an unfunded Federal mandate upon any State, local or tribal governments.

The Privacy Act of 1974, 5 U.S.C. 552a, as Amended

The Department has determined this rule does not require that any new information be processed, filed or collected during an appeal before the Board under the Privacy Act, 5 U.S.C. 552a. Therefore, this rule does not require revision of the current Privacy Act System of Records, DOL/GOVT–1, Office of Workers' Compensation Programs, Federal Employees' Compensation Act File, 67 FR 16826 (April 8, 2002) and DOL/ECAB–1, Employees' Compensation Appeals Board Docket Records, 67 FR 16867 (April 8, 2002).

List of Subjects in 20 CFR Part 501

Administrative practice and procedure, Workers' compensation.

Signed at Washington, DC, on October 6, 2008.

Howard M. Radzely,

Deputy Secretary, U.S. Department of Labor.

■ For the reasons set forth in the preamble, 20 CFR Part 501 is hereby revised to read as follows:

PART 501—RULES OF PROCEDURE

Sec.
501.1 Definitions.
501.2 Scope and applicability of rules; composition and jurisdiction of the Board.
501.3 Notice of appeal.
501.4 Case record; inspection; submission of pleadings and motions.
501.5 Oral argument.
501.6 Decisions and orders.
501.7 Petition for reconsideration.
501.8 Clerk of the Office of the Appellate Boards; docket of proceedings; records.
501.9 Representation; appearances and fees.

Authority: Federal Employees' Compensation Act (FECA), 5 U.S.C. 8101 *et seq.*

§ 501.1 Definitions.

(a) *FECA* means the Federal Employees' Compensation Act, 5 U.S.C. 8101 *et seq.* and any statutory extension or application thereof.

(b) *The Board* means the Employees' Compensation Appeals Board.

(c) *Chief Judge and Chairman of the Board* means the Chairman of the Employees' Compensation Appeals Board.

(d) *Judge or Alternate Judge* means a member designated and appointed by the Secretary of Labor with authority to hear and make final decisions on appeals taken from determinations and awards by the OWCP in claims arising under the FECA.

(e) *OWCP* means the Office of Workers' Compensation Programs, Employment Standards Administration, U.S. Department of Labor.

(f) *Director* means the Director of the Office of Workers' Compensation Programs or a person delegated authority to perform the functions of the Director. The Director of OWCP is represented before the Board by an attorney designated by the Solicitor of Labor.

(g) *Appellant* means any person adversely affected by a final decision or order of the OWCP who files an appeal to the Board.

(h) *Representative* means an individual properly authorized by an Appellant in writing to act for the Appellant in connection with an appeal before the Board. The Representative may be any individual or an attorney who has been admitted to practice and who is in good standing with any court of competent jurisdiction.

(i) *Decision,* as prescribed by 5 U.S.C. 8149 of the FECA, means the final determinative action made by the Board on appeal of a claim.

(j) *Clerk or Office of the Clerk* means the Clerk of the Office of the Appellate Boards.

§ 501.2 Scope and applicability of rules; composition and jurisdiction of the Board.

(a) The regulations in this part establish the Rules of Practice and Procedure governing the operation of the Employees' Compensation Appeals Board.

(b) The Board consists of three permanent judges, one of whom is designated as Chief Judge and Chairman of the Board, and such alternate judges as are appointed by the Secretary of Labor. The Chief Judge is the administrative officer of the Board. The functions of the Board are quasi-judicial. For organizational purposes, the Board is placed in the Office of the Secretary of Labor and sits in Washington, DC.

(c) The Board has jurisdiction to consider and decide appeals from final decisions of OWCP in any case arising under the FECA. The Board may review all relevant questions of law, fact and exercises of discretion (or failure to exercise discretion) in such cases.

(1) The Board's review of a case is limited to the evidence in the case record that was before OWCP at the time

of its final decision. Evidence not before OWCP will not be considered by the Board for the first time on appeal.

(2) There will be no appeal with respect to any interlocutory matter decided (or not decided) by OWCP during the pendency of a case.

(3) The Board and OWCP may not exercise simultaneous jurisdiction over the same issue in a case on appeal. Following the docketing of an appeal before the Board, OWCP does not retain jurisdiction to render a further decision regarding the issue on appeal until after the Board relinquishes jurisdiction.

§ 501.3 Notice of Appeal.

(a) *Who may file.* Any person adversely affected by a final decision of the Director, or his or her authorized Representative, may file for review of such decision by the Board.

(b) *Place of filing.* The notice of appeal shall be filed with the Clerk at 200 Constitution Avenue, NW., Washington, DC 20210.

(c) *Content of notice of appeal.* A notice of appeal shall contain the following information:

(1) Date of Appeal.

(2) Full name, address and telephone number of the Appellant and the full name of any deceased employee on whose behalf an appeal is taken. In addition, the Appellant must provide a signed authorization identifying the full name, address and telephone number of his or her Representative, if applicable.

(3) Employing establishment, and the date, description and place of injury.

(4) Date and Case File Number assigned by OWCP concerning the decision being appealed to the Board.

(5) A statement explaining Appellant's disagreement with OWCP's decision and stating the factual and/or legal argument in favor of the appeal.

(6) *Signature:* An Appellant must sign the notice of appeal.

(d) *Substitution of appellant:* Should the Appellant die after having filed an appeal with the Board, the appeal may proceed to decision provided there is the substitution of a proper Appellant who requests that the appeal proceed to decision by the Board.

(e) *Time limitations for filing.* Any notice of appeal must be filed within 180 days from the date of issuance of a decision of the OWCP. The Board maintains discretion to extend the time period for filing an appeal if an applicant demonstrates compelling circumstances. Compelling circumstances means circumstances beyond the Appellant's control that prevent the timely filing of an appeal and does not include any delay caused by the failure of an individual to exercise due diligence in submitting a notice of appeal.

(f) *Date of filing.* A notice of appeal complying with paragraph (c) of this section is considered to have been filed only if received by the Clerk by the close of business within the period specified under paragraph (e) of this section, except as otherwise provided in this subsection:

(1) If the notice of appeal is sent by United States Mail or commercial carrier and use of the date of delivery as the date of filing would result in a loss of appeal rights, the appeal will be considered to have been filed as of the date of postmark or other carriers' date markings. The date appearing on the U.S. Postal Service postmark or other carriers' date markings (when available and legible) shall be prima facie evidence of the date of mailing. If there is no such postmark or date marking or it is not legible, other evidence, such as, but not limited to, certified mail receipts, certificate of service and affidavits, may be used to establish the mailing date. If a notice of appeal is delivered or sent by means other than United States Mail or commercial carrier, including personal delivery or fax, the notice is deemed to be received when received by the Clerk.

(2) In computing the date of filing, the 180 day time period for filing an appeal begins to run on the day following the date of the OWCP decision. The last day of the period so computed shall be included, unless it is a Saturday, Sunday or Federal holiday, in which event the period runs to the close of the next business day.

(g) *Failure to timely file a notice of appeal.* The failure of an Appellant or Representative to file an appeal with the Board within the period specified under paragraph (e) of this section, including any extensions granted by the Board in its discretion based upon compelling circumstances, will foreclose all right to review. The Board will dismiss any untimely appeal for lack of jurisdiction.

(h) *Incomplete notice of appeal.* Any timely notice of appeal that does not contain the information specified in paragraph (c) of this section will be considered incomplete. On receipt by the Board, the Clerk will inform Appellant of the deficiencies in the notice of appeal and specify a reasonable time to submit the requisite information. Such appeal will be dismissed unless Appellant provides the requisite information in the time specified by the Clerk.

§ 501.4 Case record; inspection; submission of pleadings and motions.

(a) *Service on OWCP and transmission of OWCP case record.* The Board shall serve upon the Director a copy of each notice of appeal and accompanying documents. Within 60 days from the date of such service, the Director shall provide to the Board the record of the OWCP proceeding to which the notice refers. On application of the Director, the Board may, in its discretion, extend the time period for submittal of the OWCP case record.

(b) *Inspection of record.* The case record on appeal is an official record of the OWCP.

(1) Upon written application to the Clerk, an Appellant may request inspection of the OWCP case record. At the discretion of the Board, the OWCP case record may either be made available in the Office of the Clerk of the Appellate Boards for inspection by the Appellant, or the request may be forwarded to the Director so that OWCP may make a copy of the OWCP case record and forward this copy to the Appellant. Inspection of the papers and documents included in the OWCP case record of any appeal pending before the Board will be permitted or denied in accordance with 5 CFR 10.10 to 10.13. The Chief Judge (or his or her designee) shall serve as the disclosure officer for purposes of Appendix A to 29 CFR Parts 70 and 71.

(2) Copies of the documents generated in the course of the appeal before the Board will be provided to the Appellant and Appellant's Representative by the Clerk. If the Appellant needs additional copies of such documents while the appeal is pending, the Appellant may obtain this information by contacting the Clerk. Pleadings and motions filed during the appeal in proceedings before the Board will be made part of the official case record of the OWCP.

(c) *Pleadings.* The Appellant, the Appellant's Representative and the Director may file pleadings supporting their position and presenting information, including but not limited to briefs, memoranda of law, memoranda of justification, and optional form AB–1. All pleadings filed must contain the docket number and be filed with the Clerk. The Clerk will issue directions specifying the time allowed for any responses and replies.

(1) The Clerk will distribute copies of any pleading received by the Clerk to ensure that the Appellant, his or her Representative and the Director receive all pleadings. Any pleading should be submitted within 60 days of the filing of an appeal. The Board may, in its

discretion, extend the time period for the submittal of any pleading.

(2) Proceedings before the Board are informal and there is no requirement that any pleading be filed. Failure to submit a pleading or to timely submit a pleading does not prejudice the rights of either the Appellant or the Director.

(3) Upon receipt of a pleading, the Appellant and the Director will have the opportunity to submit a response to the Board.

(d) *Motions.* Motions are requests for the Board to take specific action in a pending appeal. Motions include, but are not limited to, motions to dismiss, affirm the decision below, remand, request a substitution, request an extension of time, or other such matter as may be brought before the Board. Motions may be filed by the Appellant, the Appellant's Representative and the Director. The motion must be in writing, contain the docket number, state the relief requested and the basis for the relief requested, and be filed with the Clerk. Any motion received will be sent by the Clerk to ensure that the Appellant, his or her Representative and the Director receive all motions. The Clerk will issue directions specifying the timing of any responses and replies. The Board also may act on its own to issue direction in pending appeals, stating the basis for its determination.

(e) *Number of copies.* All filings with the Board, including any notice of appeal, pleading, or motion shall include an original and two (2) legible copies.

§ 501.5 Oral argument.

(a) *Oral argument.* Oral argument may be held in the discretion of the Board, on its own determination or on application by Appellant or the Director.

(b) *Request.* A request for oral argument must be submitted in writing to the Clerk. The application must specify the issue(s) to be argued and provide a statement supporting the need for oral argument. The request must be made no later than 60 days after the filing of an appeal. Any appeal in which a request for oral argument is not granted by the Board will proceed to a decision based on the case record and any pleadings submitted.

(c) *Notice of argument.* If a request for oral argument is granted, the Clerk will notify the Appellant and the Director at least 30 days before the date set for argument. The notice of oral argument will state the issues that the Board has determined will be heard.

(d) *Time allowed.* Appellant and any Representative for the Director shall be allowed no more than 30 minutes to present oral argument. The Board may, in its discretion, extend the time allowed.

(e) *Appearances.* An Appellant may appear at oral argument before the Board or designate a Representative. Argument shall be presented by the Appellant or a Representative, not both. The Director may be represented by an attorney with the Solicitor of Labor. Argument is limited to the evidence of record on appeal.

(f) *Location.* Oral argument is heard before the Board only in Washington, DC. The Board does not reimburse costs associated with attending oral argument.

(g) *Continuance.* Once oral argument has been scheduled by the Board, a continuance will not be granted except on a showing of good cause. Good cause may include extreme hardship or where attendance by an Appellant or Representative is mandated at a previously scheduled judicial proceeding. Any request for continuance must be received by the Board at least 15 days before the date scheduled for oral argument and be served by the requester upon Appellant and the Director. No request for a second continuance will be entertained by the Board. In such case, the appeal will proceed to a decision based on the case record. The Board may reschedule or cancel oral argument on its own motion at any time.

(h) *Nonappearance.* The absence of an Appellant, his or her Representative, or the Director at the time and place set for oral argument will not delay the Board's resolution of an appeal. In such event, the Board may, in its discretion, reschedule oral argument, or cancel oral argument and treat the case as submitted on the case record.

§ 501.6 Decisions and orders.

(a) *Decisions.* A decision of the Board will contain a written opinion setting forth the reasons for the action taken and an appropriate order. The decision is based on the case record, all pleadings and any oral argument. The decision may consist of an affirmance, reversal or remand for further development of the evidence, or other appropriate action.

(b) *Panels.* A decision of not less than two judges will be the decision of the Board.

(c) *Issuance.* The date of the Board's decision is the date of issuance or such date as determined by the Board. Issuance is not determined by the postmark on any letter containing the decision or the date of actual receipt by Appellant or the Director.

(d) *Finality.* The decisions and orders of the Board are final as to the subject matter appealed, and such decisions and orders are not subject to review, except by the Board. The decisions and orders of the Board will be final upon the expiration of 30 days from the date of issuance unless the Board has fixed a different period of time therein. Following the expiration of that time, the Board no longer retains jurisdiction over the appeal unless a timely petition for reconsideration is submitted and granted.

(e) *Dispositive orders.* The Board may dispose of an appeal on a procedural basis by issuing an appropriate order disposing of part or all of a case prior to reaching the merits of the appeal. The Board may proceed to an order on its own or on the written motion of Appellant or the Director.

(f) *Service.* The Board will send its decisions and orders to the Appellant, his or her Representative and the Director at the time of issuance.

§ 501.7 Petition for reconsideration.

(a) *Time for filing.* The Appellant or the Director may file a petition for reconsideration of a decision or order issued by the Board within 30 days of the date of issuance, unless another time period is specified in the Board's order.

(b) *Where to File.* The petition must be filed with the Clerk. Copies will be sent by the Clerk to the Director, the Appellant and his or her Representative in the time period specified by the Board.

(c) *Content of petition.* The petition must be in writing. The petition must contain the docket number, specify the matters claimed to have been erroneously decided, provide a statement of the facts upon which the petitioner relies, and a discussion of applicable law. New evidence will not be considered by the Board in a petition for reconsideration.

(d) *Panel.* The panel of judges who heard and decided the appeal will rule on the petition for reconsideration. If any member of the original panel is unavailable, the Chief Judge may designate a new panel member. The decision or order of the Board will stand as final unless vacated or modified by the vote of at least two members of the reconsideration panel.

(e) *Answer.* Upon the filing of a petition for reconsideration, Appellant or the Director may file an answer to the petition within such time as fixed by the Board.

(f) *Oral argument and decision on reconsideration.* An oral argument may be allowed at the discretion of the Board upon application of the Appellant or Director or the Board may proceed to address the matter upon the papers

filed. The Board shall grant or deny the petition for reconsideration and issue such orders as it deems appropriate.

§ 501.8 Clerk of the Office of the Appellate Boards; docket of proceedings; records.

(a) *Location and business hours.* The Office of the Clerk of the Appellate Boards is located at 200 Constitution Avenue, NW., Washington, DC 20210. The Office of the Clerk is open during business hours on all days except Saturdays, Sundays and Federal holidays, from 8:30 a.m. to 5 p.m.

(b) *Docket.* The Clerk will maintain a docket containing a record of all proceedings before the Board. Each docketed appeal will be assigned a number in chronological order based upon the date on which the notice of appeal is received. While the Board generally hears appeals in the order docketed, the Board retains discretion to change the order in which a particular appeal will be considered. The Clerk will prepare a calendar of cases submitted or awaiting oral argument and such other records as may be required by the Board.

(c) *Publication of decisions.* Final decisions of the Board will be published in such form as to be readily available for inspection by the general public.

§ 501.9 Representation; Appearances and Fee.

(a) *Representation.* In any proceeding before the Board, an Appellant may appear in person or by appointing a duly authorized individual as his or her Representative.

(1) *Counsel.* The designated Representative may be an attorney who has been admitted to practice and who is in good standing with any court of competent jurisdiction.

(2) *Lay representative.* A non-attorney Representative may represent an Appellant before the Board. He or she may be an accredited Representative of an employee organization.

(3) *Former members of the Board and other employees of the Department of Labor.* A former judge of the Board is not allowed to participate as counsel or other Representative before the Board in any proceeding until two years from the termination of his or her status as a judge of the Board. The practice of a former judge or other former employee of the Department of Labor is governed by 29 CFR Part 0, Subpart B.

(b) *Appearance.* No individual may appear as a Representative in a proceeding before the Board without first filing with the Clerk a written authorization signed by the Appellant to be represented. When accepted by the Board, such Representative will continue to be recognized unless the Representative withdraws or abandons such capacity or the Appellant directs otherwise.

(c) *Change of address.* Each Appellant and Representative authorized to appear before the Board must give the Clerk written notice of any change to the address or telephone number of the Appellant or Representative. Such notice must identify the docket number and name of each pending appeal for that Appellant, or, in the case of a Representative, in which he or she is a Representative before the Board. Absent such notice, the mailing of documents to the address most recently provided to the Board will be fully effective.

(d) *Debarment of Counsel or Representative.* In any proceeding, whenever the Board finds that a person acting as counsel or other Representative for the Appellant or the Director, is guilty of unethical or unprofessional conduct, the Board may order that such person be excluded from further acting as counsel or Representative in such proceeding. Such order may be appealed to the Secretary of Labor or his or her designee, but proceedings before the Board will not be delayed or suspended pending disposition of such appeal. However, the Board may suspend the proceeding of an appeal for a reasonable time for the purpose of enabling Appellant or the Director to obtain different counsel or other Representative. Whenever the Board has issued an order precluding a person from further acting as counsel or Representative in a proceeding, the Board will, within a reasonable time, submit to the Secretary of Labor or his or her designee a report of the facts and circumstances surrounding the issuance of such order. The Board will recommend what action the Secretary of Labor should take in regard to the appearance of such person as counsel or Representative in other proceedings before the Board. Before any action is taken debarring a person as counsel or Representative from other proceedings, he or she will be furnished notice and the opportunity to be heard on the matter.

(e) *Fees for attorney, Representative, or other services.* No claim for a fee for legal or other service performed on appeal before the Board is valid unless approved by the Board. Under 18 U.S.C. 292, collecting a fee without the approval of the Board may constitute a misdemeanor, subject to fine or imprisonment for up to a year or both. No contract for a stipulated fee or on a contingent fee basis will be approved by the Board. No fee for service will be approved except upon written application to the Clerk, supported by a statement of the extent and nature of the necessary work performed before the Board on behalf of the Appellant. The fee application will be served by the Clerk on the Appellant and a time set in which a response may be filed. Except where such fee is *de minimis*, the fee request will be evaluated with consideration of the following factors:

(1) Usefulness of the Representative's services;

(2) The nature and complexity of the appeal;

(3) The capacity in which the Representative has appeared;

(4) The actual time spent in connection with the Board appeal; and

(5) Customary local charges for similar services.

[FR Doc. E8–24930 Filed 10–17–08; 8:45 am]

BILLING CODE 4510–23–P

DEPARTMENT OF STATE

22 CFR Parts 7 and 50

[Public Notice: 6398]

Board of Appellate Review; Review of Loss of Nationality

AGENCY: State Department.

ACTION: Final rule.

SUMMARY: This rule eliminates the Department's Board of Appellate Review (L/BAR), which had been authorized to review certain Department determinations, in particular those related to loss of citizenship and passport denials. Because L/BAR's jurisdiction has been superseded or made obsolete, and in large part replaced by review of loss of citizenship and passport matters by the Bureau of Consular Affairs, this rule eliminates L/BAR and authorizes on a discretionary basis an alternative, less cumbersome review of loss of nationality determinations by the Bureau of Consular Affairs.

DATES: This rule is effective October 20, 2008.

FOR FURTHER INFORMATION CONTACT: Monica A. Gaw, Office of Policy Review and InterAgency Liaison, Overseas Citizens Services, who may be reached at (202) 736–9110, e-mail *GAWMA@state.gov*.

SUPPLEMENTARY INFORMATION: The Department published an interim final rule, Public Notice 6298 at 73 FR 41256 (July 18, 2008), with 60 days for post-promulgation comment, amending 22 CFR by removing the regulations in Part

7 that established the Board of Appellate Review (L/BAR) and revising § 50.51 to provide for an alternative method of review of loss of nationality determinations on a discretionary basis.

The rule was discussed in detail in Public Notice 6298, as were the Department's reasons for making the changes to the regulations. There were no comments to the interim final rule published July 18, 2008. The Department is now promulgating a final rule with no changes.

Regulatory Findings

Administrative Procedure Act

The Department published this rule as an interim final rule on July 18, 2008, with 60 days for post-promulgation comment, in accordance with the exemption contained in 5 U.S.C. 553(a)(2) for matters relating to agency management or personnel.

Regulatory Flexibility Act

Since this action is exempt from the notice and comment procedures contained in 5 U.S.C. 553, and no other statute mandates such procedures, no analysis under the Regulatory Flexibility Act (5 U.S.C. 601 *et seq.*) is required. However, these changes to the regulations are hereby certified as not expected to have a significant impact on a substantial number of small entities under the criteria of the Regulatory Flexibility Act, 5 U.S.C. 601–612, and Executive Order 13272, section 3(b).

Unfunded Mandates Reform Act of 1995

This rule will not result in the expenditure by state, local, and tribal governments, in the aggregate, or by the private sector, of $100 million or more (adjusted annually for inflation) in any year and it will not significantly or uniquely affect small governments. Therefore, no actions were deemed necessary under the provisions of the Unfunded Mandates Reform Act of 1995.

Small Business Regulatory Enforcement Fairness Act of 1996

This rule is not a major rule as defined by section 804 of the Small Business Regulatory Enforcement Act of 1996. This rule will not result in an annual effect on the economy of $100 million or more; a major increase in costs or prices; or significant adverse effects on competition, employment, investment, productivity, innovation, or on the ability of United States-based companies to compete with foreign-based companies in domestic and import markets.

Executive Order 12866

The Department does not consider this rule to be a ''significant regulatory action'' within the scope of section 3(f)(1) of Executive Order 12866. In addition, the Department is exempt from Executive Order 12866 except to the extent that it is promulgating regulations in conjunction with a domestic agency that are significant regulatory actions. The Department has nevertheless reviewed the regulation to ensure its consistency with the regulatory philosophy and principles set forth in that Executive Order.

Executive Order 12988—Civil Justice Reform

The Department has reviewed this regulation in light of sections 3(a) and 3(b)(2) of Executive Order No. 12988 to eliminate ambiguity, minimize litigation, establish clear legal standards, and reduce burden.

Executive Orders 12372 and 13132—Federalism

This regulation will not have substantial direct effects on the States, on the relationship between the national government and the States, or on the distribution of power and responsibilities among the various levels of government. Therefore, in accordance with section 6 of Executive Order 13132, it is determined that this rule does not have significant federalism implications warranting the application of Executive Orders No. 12372 and No. 13132.

National Environmental Policy Act

The Department has analyzed this regulation for the purpose of the National Environmental Policy Act of 1969 (42 U.S.C. 4321 through 4327) and has determined that it will not have any effect on the quality of the environment.

The Paperwork Reduction Act of 1995

This rule does not impose any new reporting or recordkeeping requirements subject to the Paperwork Reduction Act of 1995, 44 U.S.C. 3501, *et seq.*

List of Subjects

22 CFR Part 7

Board of Appellate Review.

22 CFR Part 50

Citizenship, Nationality, Loss of Nationality.

■ Accordingly, the interim rule amending 22 CFR parts 7 and 50 published at 73 FR 41256, July 18, 2008 is adopted as final without change.

Dated: October 7, 2008.

Janice L. Jacobs,

Assistant Secretary of State, Bureau of Consular Affairs, Department of State.

[FR Doc. E8–24472 Filed 10–17–08; 8:45 am]

BILLING CODE 4710–06–P

DEPARTMENT OF STATE

22 CFR Part 40

[Public Notice 6395]

RIN 1400–AB68

Uncertified Foreign Health-Care Workers

AGENCY: Department of State.

ACTION: Final rule.

SUMMARY: This rule adopts as final without change the Department's interim rule published on December 17, 2002, at 67 FR 77158. The rule changes the requirements pertaining to the issuance of visas to certain health care workers. Certain foreign health care workers now need to present certificates establishing competency in a specific health care field. Certification is issued by the Commission on Graduates of Foreign Nursing Schools (CGFNS) or other credentialing organizations that have been approved by the Secretary of Homeland Security (DHS) in consultation with the Secretary of Health and Human Services (HHS). This rule facilitates greater uniformity between the regulations of DHS and the Department of State.

DATES: *Effective Date:* Effective October 20, 2008.

FOR FURTHER INFORMATION CONTACT: Penafrancia D. Salas, Legislation and Regulations Division, Visa Services, Department of State, Washington, DC 20520–0106. *Phone:* 202–663–1202. *E-mail:* (*salaspd@state.gov*).

SUPPLEMENTARY INFORMATION:

What Is The Background of This Rule?

An alien who seeks to enter the United States for the purpose of performing labor as a health care worker, other than as a physician, is ineligible for visa issuance and is inadmissible to the United States unless the alien presents to the consular officer a certificate from the CGFNS or a certificate from an equivalent independent credentialing organization approved by DHS in consultation with HHS that indicates the following:

(a) The alien's education, training, license, and experience:

1. Meet all applicable statutory and regulatory requirements for admission

into the United States under the specified visa;

2. Are comparable with those required for an American health care worker of the same type;

3. Are authentic; and,

4. In the case of a license is unencumbered (not burdened or affected);

(b) The alien has the level of competence in oral and written English considered by the Secretary of HHS, in consultation with the Secretary of Education, to be appropriate for the health care work in which the alien will be engaged. HHS's finding is to be based on an established score on one or more nationally recognized, commercially available, standardized assessments; and,

(c) If a majority of states licensing the profession in which the alien intends to work recognize a test predicting an applicant's success on the profession's licensing or certification examination, the alien has passed such a test, or has passed the certification examination.

The Immigration and Nationality Act section 212(r) created an alternative certification process for certain aliens seeking to enter the United States to perform nursing services. In general, such procedures apply to those aliens who already possess a valid, unrestricted, authentic and unencumbered license as a nurse in a state where the alien intends to be employed and who received their nursing training in a country where the quality of education and the English proficiency of nursing graduates have been recognized by the CGFNS as meeting its standards.

On July 25, 2003, the Department of Homeland Security published in the **Federal Register** at 68 FR 43901 its final rule establishing at 8 CFR 212.15 the regulations governing the certification process for aliens seeking to enter to provide labor as health care providers. Aliens in covered health care occupations (with the exception of aliens who, under 8 CFR 212.15(b) are not subject to the certification requirement of 212(a)(5)(C) and 212(r) of the INA (8 U.S.C. 1182(a)(5)(C) and 8 U.S.C. 1182(r) respectively, and the Department of Homeland Security Regulations at 8 CFR 212.15) specified at 8 CFR 212.15(c)) are inadmissible.

Comments

Were Comments Solicited on This Rule?

Yes, comments were solicited. Although the Department received four comments in response to this rule, the comments raised issues regarding the hardship on the individual commenters that the statutory requirements imposed. For example, several comments focused on the shortage of nurses in the United States and the need for foreign nurses to make up the shortage. Other comments focused on issues relating to the licensure of nurses.

Regulatory Findings

Administrative Procedure Act

The Department's implementation of the interim rule was based upon the ''good cause'' exception found at 5 U.S.C. 553(b)(B). Section 553(b) of the APA authorizes agencies to dispense with certain notice procedures for rules when they are ''impracticable, unnecessary, or contrary to public interest.'' Nevertheless, the Department solicited public comments. This rule makes final an amendment to the regulation that implemented a legislative mandate that codified current practices.

Regulatory Flexibility Act/Executive Order 13272: Small Business

The Department of State, pursuant to the Regulatory Flexibility Act (5 U.S.C. 605(b), has assessed this regulation and, by approving it, certifies that this rule will not have a significant economic impact on a substantial number of small entities.

The Unfunded Mandates Reform Act of 1995

Section 202 of the Unfunded Mandates Reform Act of 1995 (UFMA), Public Law 104–4, 109 Stat. 48, 2 U.S.C. 1532, generally requires agencies to prepare a statement before proposing any rule that may result in an annual expenditure of $100 million or more by State, local, or tribal governments, or by the private sector. This rule will not result in any such expenditure, nor will it significantly or uniquely affect small governments.

The Small Business Regulatory Enforcement Fairness Act of 1996

This rule is not a major rule as defined by 5 U.S.C. 804, for purposes of congressional review of agency rulemaking under the Small Business Regulatory Enforcement Fairness Act of 1996, Public Law 104–121. This rule will not result in an annual effect on the economy of $100 million or more; a major increase in costs or prices; or significant adverse effects on competition, employment, investment, productivity, innovation, or on the ability of United States-based companies to compete with foreign-based companies in domestic and import markets.

Executive Order 12866: Regulatory Review

The Department of State has reviewed this rule to ensure its consistency with the regulatory philosophy and principles set forth in Executive Order 12866 and has determined that the benefits of the regulation justify its costs. The Department does not consider the rule to be an economically significant action within the scope of section 3(f)(1) of the Executive Order since it is not likely to have an annual effect on the economy of $100 million or more or to adversely affect in a material way the economy, a sector of the economy, competition, jobs, the environment, public health or safety, or State, local or tribal governments or communities.

Executive Orders 12372 and 13132: Federalism

This regulation will not have substantial direct effects on the States, on the relationship between the national government and the States, or the distribution of power and responsibilities among the various levels of government. Nor will the rule have federalism implications warranting the application of Executive Orders No. 12372 and No. 13132.

Executive Order 12988: Civil Justice Reform

The Department has reviewed the proposed regulations in light of sections 3(a) and 3(b)(2) of Executive Order No. 12988 to eliminate ambiguity, minimize litigation, establish clear legal standards, and reduce burden.

Paperwork Reduction Act

This rule does not impose any new reporting or recordkeeping requirements subject to the Paperwork Reduction Act, 44 U.S.C. Chapter 35.

List of Subjects in 22 CFR Part 40

Aliens, Nonimmigrants, Immigrants, Documentation, Passports and Visas.

■ Accordingly, the interim rule amending 22 CFR part 40 published at 67 FR 77158, December 17, 2002 is adopted as final without change.

Dated: October 6, 2008.

Janice L. Jacobs,

Assistant Secretary for Consular Affairs Department of State.

[FR Doc. E8–24474 Filed 10–17–08; 8:45 am]

BILLING CODE 4710–06–P

DEPARTMENT OF THE TREASURY

Internal Revenue Service

26 CFR Part 1

[TD 9428]

RIN 1545–BD72

Section 1367 Regarding Open Account Debt

AGENCY: Internal Revenue Service (IRS), Treasury.

ACTION: Final regulations.

SUMMARY: This document contains final regulations relating to the treatment of open account debt between S corporations and their shareholders. These final regulations provide rules regarding the definition of open account debt and the adjustments in basis of any indebtedness of an S corporation to a shareholder under section 1367(b)(2) of the Internal Revenue Code (Code) for shareholder advances and repayments on advances of open account debt. The regulations affect shareholders of S corporations and are necessary to provide guidance needed to comply with the applicable tax law.

DATES:

Effective Date: These regulations are effective on October 20, 2008.

Applicability Date: For dates of applicability, see § 1.1367–3.

FOR FURTHER INFORMATION CONTACT: Stacy L. Short or Deane M. Burke, (202) 622–3070 (not a toll-free number).

SUPPLEMENTARY INFORMATION:

Background

This document amends § 1.1367–2 of the Income Tax Regulations (26 CFR part 1) regarding the definition of open account debt and adjustments in basis of indebtedness for shareholder advances and repayments on advances of open account debt.

Section 1367(a)(1) provides that the basis of each shareholder's stock in an S corporation is increased by the shareholder's pro rata share of the S corporation's income (separately and nonseparately computed items of income) and the excess of the deductions for depletion over the basis of the property subject to depletion. Section 1367(a)(2) provides that the basis of each shareholder's stock in the S corporation is decreased by the shareholder's distributions not includible in income of the shareholder by reason of section 1368 (nontaxable distributions), and the shareholder's pro rata share of the losses and deductions (separately and nonseparately computed losses), any expense of the corporation that is not deductible and not properly chargeable to capital account, and certain deductions for depletion for any oil and gas property held by the S corporation. Under section 1367(b)(2)(A), if for any taxable year the amounts specified in section 1367(a)(2) (other than distributions) exceed the amount which reduces the shareholder's basis to zero, such excess losses and deductions shall be applied to reduce (but not below zero) the shareholder's basis in any indebtedness of the S corporation to the shareholder. Section 1367(b)(2)(B) provides that if a shareholder's basis in indebtedness is reduced for any taxable year, any net increase (the amount by which the items described in section 1367(a)(1) exceed the items described in section 1367(a)(2)) for any subsequent taxable year is applied to restore the reduction in basis in indebtedness before any of the excess is used to increase basis in stock.

On January 3, 1994, the Treasury Department and the IRS published final regulations under section 1367 of the Code (TD 8508, 59 FR 12, amended on December 22, 1999 (TD 8852, 64 FR 71641)). Those final regulations relate, in part, to adjustments to basis in both stock of shareholders and indebtedness of an S corporation to its shareholders. Section 1.1367–2 of the Income Tax Regulations provides specific rules for required adjustments (reductions and restorations) to basis in any indebtedness of an S corporation to a shareholder. Section 1.1367–2(a) also provides that for purposes of adjustments to basis of indebtedness to shareholders, shareholder advances not evidenced by separate written instruments and repayments on the advances (open account debt) are treated as a single indebtedness. The basis adjustment rules under the final regulations apply to all indebtedness of an S corporation to a shareholder, whether the indebtedness is evidenced by a written instrument or is open account debt. Taxpayers should also remember that all advances to an S corporation by a shareholder are subject to the general tax principles for debt, whether evidenced by a written instrument or not.

On August 25, 2005, the Tax Court issued its decision in *Brooks* v. *Commissioner,* TC Memo. 2005–204, involving open account debt. Under its interpretation of § 1.1367–2, the court in *Brooks* held ''that the basis of the open account indebtedness is properly computed by netting at the close of the year advances of open account debt during the year and repayments of open account debt during the year.'' This allowed the taxpayer in *Brooks* to defer indefinitely the recognition of income on any repayment of his open account debt over the several years during which the taxpayer and the S corporation made advances and repayments, respectively.

On April 12, 2007, the Treasury Department and the IRS published a notice of proposed rulemaking and a notice of public hearing (REG–144859–04, 2007–20 IRB 1245) in the **Federal Register** (72 FR 18417) proposing amendments to the regulations relating to the treatment of open account debt between S corporations and their shareholders. A public hearing on the proposed regulations was scheduled for July 31, 2007, but was cancelled because no one requested to speak. However, comments responding to the proposed regulations were received. After consideration of these comments, the proposed regulations are adopted as revised by this Treasury decision. These final regulations generally retain the provisions of the proposed regulations with the modifications discussed in the preamble.

Summary of Comments and Explanation of Revisions

1. Need for Regulatory Change

All of the comments received in response to the proposed regulations suggested that the regulations were overly broad and should be withdrawn. Two commentators suggested that amending the regulations for open account debt is not an appropriate approach for the Treasury Department and the IRS to address concerns regarding transactions similar to that in *Brooks.* Instead, the commentators asserted, such concerns should be addressed through established judicial doctrines such as substance over form, business purpose, sham transaction, and economic substance. One commentator alternatively recommended a narrowly tailored anti-abuse rule targeting open account debt instead of broader rules that would apply to all such debt.

The Treasury Department and the IRS continue to believe that regulatory guidance on open account debt is necessary. The Treasury Department and the IRS believe that the treatment of open account debt as interpreted in *Brooks* permits tax consequences that are inconsistent with the original purpose of § 1.1367–2 and is not conducive to sound tax administration. Neither established judicial doctrines alone nor a narrowly tailored anti-abuse rule suggested by the commentators would adequately address these concerns, though the Treasury Department and the IRS continue to

recognize the applicability of the judicial doctrines in appropriate cases in addition to these final regulations.

2. Aggregate Principal Threshold Amount

The proposed regulations defined open account debt as shareholder advances not evidenced by separate written instruments for which the principal amount of the aggregate advances (net of repayments on advances) did not exceed $10,000 per shareholder at the close of any day during the S corporation's taxable year. Shareholders were required to determine for open account debt purposes whether shareholder advances and repayments on the advances exceeded the $10,000 aggregate principal threshold on any day during the S corporation's taxable year. To make such a determination, shareholders were required to maintain a ''running balance'' of shareholder advances and repayments on advances, and the outstanding principal amount of the open account debt. If the resulting aggregate principal of the running balance exceeded $10,000 at the close of any day during the S corporation's taxable year, the entire principal amount of the indebtedness would no longer constitute open account debt effective at the close of that day.

Commentators suggested that the proposed regulations' aggregate principal threshold of $10,000 was too low for most businesses. One commentator asserted that establishing any aggregate principal threshold dollar amount for open account debt in final regulations would be arbitrary and would impose a certain compliance burden on smaller businesses. However, that commentator also suggested that increasing the aggregate principal threshold dollar amount would mitigate the compliance burden. The commentators suggested that if the final regulations adopt any threshold dollar amount for open account debt, such a threshold amount should be increased to an amount ranging from $100,000 to $1 million.

After considering the comments on the aggregate principal threshold dollar amount, and on recognizing customary business practices as noted by the commentators, the Treasury Department and the IRS have concluded that the aggregate principal threshold dollar amount for open account debt should be increased and that other changes are necessary. Therefore, the final regulations adopt a $25,000 aggregate principal threshold amount per shareholder for open account debt. For example, an S corporation with ten shareholders could receive up to $250,000 of open account debt as long as no single shareholder advanced more than $25,000. The Treasury Department and the IRS believe that the $25,000 threshold, together with certain other changes noted below, balances concerns over deferral potential with normal business practices. Under the final regulations, for any particular shareholder advances and repayments on those advances for which, as of the specified determination date, the aggregate principal balance exceeds the $25,000 aggregate principal threshold amount will no longer constitute open account debt, but instead will be treated as debt evidenced by a separate written instrument subject to the basis adjustment and repayment accounting rules applicable to S corporation shareholder debt generally.

As noted in the preamble to the proposed regulations, the $10,000 aggregate principal threshold amount for open account debt for purposes of § 1.1367–2 was modeled after section 7872(c)(3) and the de minimis exception for corporation-shareholder loans in § 1.7872–9 of the proposed regulations. However, the Treasury Department and the IRS do not believe it is necessary that the threshold amount for open account debt be modeled after the rules under § 1.7872–9 regarding corporate-shareholder loans. Nevertheless, despite the $25,000 threshold amount for open account debt in these final regulations, the provisions under section 7872 and related regulations for corporate-shareholder loans in excess of $10,000 separately apply to open account debt in excess of $10,000 for each advance if the corporation is not obligated to pay a market rate of interest on the advances.

3. Monitoring the Aggregate Principal Threshold Amount

The proposed regulations effectively required day-to-day monitoring of open account debt. For purposes of determining compliance with the aggregate principal threshold amount for open account debt, the shareholder was required to maintain a daily running balance of shareholder advances and repayments on such advances, and the outstanding principal amount of the open account debt. Some of the commentators suggested that the daily monitoring requirement would impose an unreasonable burden on shareholders and recommended that the running balance requirement be tested quarterly, annually or when the corporation maintains and updates its other books and records. One commentator described the practice by many closely held corporations of reconciling and accounting only once a year and noted that only then would such an S corporation and its shareholder(s) know what payments are legitimately charged to the corporation as opposed to those appropriately charged to the shareholder(s).

Another commentator suggested that with daily monitoring, a maximum threshold rule for open account debt is too harsh for shareholders insofar as it immediately changes the treatment of such debt the principal balance of which exceeds the threshold by a single cent on any day, resulting in a ''cliff'' effect. The commentator suggested that in order to mitigate this ''cliff'' effect, the final regulations should adopt a second prong to the aggregate principal threshold amount test so that advances would fail to meet the definition of open account debt only if both the aggregate principal of the running balance exceeded the applicable aggregate principal threshold dollar amount on any given day of the year and the balance at the end of the year exceeded the average of the daily balances throughout the year. The commentator provided examples of intended beneficiaries of such an ''averaging'' rule, for example, shareholders who need to advance their S corporation more funds on a short-time basis but end the year with an outstanding principal amount of the open account debt below the threshold level.

After careful consideration of these comments, the Treasury Department and the IRS have concluded that extending the period for which a shareholder determines whether shareholder advances and repayments exceed the aggregate principal threshold dollar amount for open account debt would reduce both the complexity of the regulations and any perceived burden on shareholders in making such determinations. In addition, such a modified rule should alleviate concerns over any potential ''cliff'' effect resulting from a day-to-day determination of threshold amount as required in the proposed regulations. The Treasury Department and the IRS also recognize that shareholder advances made to an S corporation and subsequently repaid during the same taxable year of the S corporation are not available for inclusion in the shareholder's basis in the indebtedness for purposes of passing through additional losses to the shareholder at the end of the taxable year.

Therefore, the final regulations do not adopt a daily determination of whether shareholder advances and repayments on the advances exceed the $25,000 threshold amount. Instead, the final

regulations provide that a determination of whether the threshold balance of $25,000 is exceeded will be made at the end of the taxable year of the S corporation. Under these final regulations, however, if open account debt is disposed of in whole or in part before the end of the S corporation's taxable year, the determination of whether the advances and repayments have exceeded the designated aggregate principal threshold amount must be made immediately before the disposition of the debt during that taxable year. Moreover, if a shareholder with open account debt is no longer a shareholder at the end of the S corporation's taxable year, the determination must be made immediately before the shareholder's interest in the S corporation is terminated.

4. Character of Income/Gain Recognition

One of the commentators suggested that the final regulations address the issue of how to characterize any income or gain that is recognized upon repayment of both open account debt and indebtedness evidenced by a written instrument. While recognizing the commentators' concerns, the Treasury Department and the IRS believe that the characterization issue is beyond the scope of these final regulations. However, the Treasury Department and the IRS intend to continue considering the characterization issue.

5. Effective Date Operation

The effective date in the proposed regulations provided that the proposed rules for open account debt applied to any shareholder advances to the S corporation made on or after the date the regulations were published as final regulations and repayments on those advances by the S corporation. Thus, all open account debt (net of repayments) prior to the publication of the final regulation was outside the scope of the proposed regulations, irrespective of the outstanding principal amount.

One of the commentators believed that the effective date language in the proposed regulations was subject to two interpretations. Under the first interpretation, the rules under these final regulations (New Rules) would apply only to open account debt created on or after the effective date, that is, shareholder advances made on or after the effective date and repayments on those same advances. The rules under the prior final regulations (as contained in the 26 CFR edition revised April 1, 2007) (Old Rules) would apply to open account debt created before the effective date, that is, shareholder advances with respect to pre-effective date open account debt and repayments on those prior advances. Accordingly, a shareholder could have open account debt, subject to the Old Rules, and open account debt, subject to the New Rules, to which new shareholder advances and repayments on those advances could be made after the effective date.

Under the second interpretation, a shareholder could not make additional advances with respect to open account debt created before the effective date but could receive repayments on that debt under the Old Rules. Accordingly, the New Rules would apply to all shareholder advances on and after the effective date, as well as repayments on those advances, and the Old Rules would apply only to repayments on pre-effective date open account debt.

The Treasury Department and the IRS intend that the rules under these final regulations (New Rules) apply to any and all shareholder advances made on and after the effective date. The rules under these final regulations (New Rules) also apply to repayments on such advances. However, if a shareholder has open account debt (net of prior repayments in the taxable year) outstanding prior to the effective date of these final regulations, the rules under the prior final regulations (Old Rules) apply to any repayments on such pre-effective date open account debt. Accordingly, that pre-effective date open account debt will not be subject to any aggregate principal threshold dollar amount. The shareholder may not make additional advances with respect to the pre-effective date open account debt (because all shareholder advances made on or after the effective date of these final regulations constitute new open account debt subject to these final regulations).

For instance, assume that the effective date of these final regulations falls within the taxable year of shareholder A's S corporation. Also assume that, at the beginning of the S corporation's taxable year, A will have existing open account debt with an outstanding principal balance of $12,000. Assume further that A will make an additional advance of $3,000 to and will receive a $2,000 repayment from his S corporation prior to the effective date. Thus, as of the effective date, A will have existing open account debt with an outstanding principal balance of $13,000 (A would net the pre-effective date advance and repayment for the taxable year and combine that net advance of $1,000 with the $12,000 outstanding aggregate principal balance of the then existing open account debt). This $13,000 pre-effective date open account debt would not be subject to these final regulations and, thus, would not be subject to any aggregate principal threshold dollar amount and would be repaid under the rules of the prior final regulations. If, on or after the effective date of these final regulations, A were to both make an advance of $5,000 to his S corporation and receive a $1,000 repayment on that advance, the advance and repayment would constitute separate new open account debt subject to the rules under these final regulations.

Shareholders also have the option to apply these rules to shareholder advances to the S corporation and repayments on those advances by the S corporation made before the effective date of these regulations. Using the example above, A would have the option to net the $5,000 advance and $1,000 repayment.

Effective/Applicability Date

The regulations apply to any and all shareholder advances to the S corporation made on or after October 20, 2008, and repayments on those advances by the S corporation.

Special Analyses

It has been determined that this Treasury decision is not a significant regulatory action as defined in Executive Order 12866. Therefore, a regulatory assessment is not required. It also has been determined that section 553(b) of the Administrative Procedure Act (5 U.S.C. chapter 5) does not apply to these regulations. Because these regulations do not impose a collection of information on small entities, the Regulatory Flexibility Act (5 U.S.C. chapter 6) does not apply. Pursuant to section 7805(f) of the Code, the notice of proposed rulemaking that preceded these regulations was submitted to the Chief Counsel for Advocacy of the Small Business Administration for comment on its impact on small business.

Drafting Information

The principal authors of these final regulations are Stacy L. Short and Deane M. Burke of the Office of the Associate Chief Counsel (Passthroughs and Special Industries). However, other personnel from the IRS and the Treasury Department participated in their development.

List of Subjects in 26 CFR Part 1

Income taxes, Reporting and recordkeeping requirements.

Adoption of Amendments to the Regulations

■ Accordingly, 26 CFR part 1 is amended as follows:

PART 1—INCOME TAXES

■ **Paragraph 1**. The authority citation for part 1 continues to read in part as follows:

Authority: 26 U.S.C. 7805 * * *
Section 1.1367–2 also issued under 26 U.S.C. 1367(b)(2). * * *

■ **Par. 2**. Section 1.1367–2 is amended as follows:
■ 1. Paragraph (a) is revised. paragraph (a)(2) is added.
■ 2. Paragraphs (c)(2) and (d)(1) are revised.
■ 3. Paragraph (d)(2) is redesignated as paragraph (d)(3) and new paragraph (d)(2) is added.
■ 4. Paragraph (e) is amended by adding *Examples 6, 7* and *8.*

The revisions and additions read as follows:

§ 1.1367–2 Adjustments to basis of indebtedness to shareholder.

(a) *In general*—(1) *Adjustments under section 1367.* This section provides rules relating to adjustments required by subchapter S to the basis of indebtedness (including open account debt as described in paragraph (a)(2) of this section) of an S corporation to a shareholder. The basis of indebtedness of the S corporation to a shareholder is reduced as provided in paragraph (b) of this section and restored as provided in paragraph (c) of this section in accordance with the timing rules in paragraph (d) of this section.

(2) *Open Account Debt*—(i) *General rule.* The term *open account debt* means shareholder advances not evidenced by separate written instruments and repayments on the advances, the aggregate outstanding principal of which does not exceed $25,000 of indebtedness of the S corporation to the shareholder at the close of the S corporation's taxable year. Advances and repayments on open account debt are treated as a single indebtedness.

(ii) *Exception.* If the shareholder advances not evidenced by a separate written instrument, net of repayments, exceeds an aggregate outstanding principal amount of $25,000 at the close of the S corporation's taxable year, for any subsequent taxable year the aggregate principal amount of that indebtedness is treated in the same manner as indebtedness evidenced by a separate written instrument for purposes of this section. For any subsequent taxable year, that indebtedness is not open account debt and is subject to all basis adjustment rules applicable to basis of indebtedness of an S corporation to a shareholder in this section.

* * * * *

(c) * * *

(2) *Multiple indebtedness.* If a shareholder holds more than one indebtedness (including any open account debt and any debt treated as a single indebtedness under paragraph (a)(2)(ii) of this section) as of the beginning of an S corporation's taxable year, any net increase is applied first to restore the reduction of basis in any indebtedness repaid (in whole or in part) in that taxable year to the extent necessary to offset any gain that would otherwise be realized on the repayment. Any remaining net increase is applied to restore each outstanding indebtedness (including any open account debt and any debt treated as a single indebtedness under paragraph (a)(2)(ii) of this section) in proportion to the amount that the basis of each outstanding indebtedness has been reduced under section 1367(b)(2)(A) and paragraph (b) of this section and not restored under section 1367(b)(2)(B) and this paragraph (c).

(d) *Time at which adjustments to basis of indebtedness are effective*—

(1) *In general.* The amounts of the adjustments to basis of indebtedness (including open account debt) provided in section 1367(b)(2) and this section are determined as of the close of the S corporation's taxable year, and the adjustments are generally effective as of the close of the S corporation's taxable year. However, if the shareholder is not a shareholder in the S corporation at that time, these adjustments are effective immediately before the shareholder terminates his or her interest in the S corporation. Except as provided in paragraph (d)(2) of this section, if a debt is disposed of or repaid in whole or in part before the close of the taxable year, the basis of that indebtedness is restored under paragraph (c) of this section, effective immediately before the disposition or the first repayment on the debt during the taxable year. To the extent any indebtedness of the S corporation to the shareholder is disposed of or repaid (in whole or in part) during the taxable year and the shareholder's basis in that indebtedness has been reduced under paragraph (b) of this section and is not restored completely under paragraph (c) of this section, the disposition or repayment is a recognition event effective immediately before the indebtedness is disposed of or repaid (in whole or in part).

(2) *Open account debt*—(i) *In general.* All advances and repayments on open account debt (as described in paragraph (a)(2)(i) of this section) during the S corporation's taxable year are netted at the close of the S corporation's taxable year to determine the amount of any net advance or net repayment. The net advance or net repayment is combined with the outstanding aggregate principal balance of the existing open account debt and that amount is carried forward to the beginning of the subsequent taxable year as the outstanding aggregate principal amount of the open account debt (unless the aggregate principal amount meets the exception defined in paragraph (a)(2)(ii) of this section at the close of the taxable year). However, if the shareholder in the S corporation is not a shareholder of the S corporation at the close of the S corporation's taxable year, such advances and repayments on open account debt are netted, and the basis of that indebtedness is restored under paragraph (c) of this section, effective immediately before the shareholder terminates his or her interest in the S corporation. If any open account debt is disposed of before or upon the close of the taxable year, the disposition is effective at the close of the S corporation's taxable year, and all advances and repayments are netted immediately prior to the disposition and the basis of that indebtedness is restored under paragraph (c) of this section, effective at the close of the S corporation's taxable year.

(ii) *Exception.* Shareholder indebtedness that is open account debt at the beginning of the taxable year but meets the exception defined in paragraph (a)(2)(ii) of this section at the close of the taxable year, adjustments to the basis of the indebtedness for that taxable year follow the provisions for open account debt. The resulting aggregate principal amount of indebtedness is treated as the principal amount of a debt evidenced by a separate written instrument for any subsequent taxable year, and is no longer subject to the open account debt provisions of this section.

* * * * *

(e) * * *

Example 6. The $25,000 Aggregate Principal Amount Applies to Each Shareholder. (i) A and B have been the two shareholders in Corporation S since 2000. As of the end of the 2008 taxable year, the bases of A's and B's stock are both zero. On June 1, 2009, A advances S $16,000, which is not evidenced by a written instrument. On August 1, 2009, B advances S $22,000, which

is not evidenced by a written instrument. Both the $16,000 advance and the $22,000 advance are open account debt and remain outstanding at those amounts during 2009. There is no net increase under paragraph (c) of this section in year 2009.

(ii) At the close of the 2009 taxable year, A's open account debt does not exceed $25,000. A therefore carries forward to the beginning of the 2010 taxable year the $16,000 as open account debt.

(iii) At the close of the 2009 taxable year, B's open account debt does not exceed $25,000. B therefore carries forward to the beginning of the 2010 taxable year the $22,000 as open account debt.

Example 7. Treatment of open account debt. (i) The facts are the same as in Example 6, in addition to which, on December 31, 2009, A's basis in the open account debt is reduced under paragraph (b) of this section to $8,000. On April 1, 2010, S repays A $4,000 of the open account indebtedness. On September 1, 2010, A advances S an additional $1,000, which is not evidenced by a written instrument. There is no net increase under paragraph (c) of this section in year 2010.

(ii) The $4,000 April repayment S makes to A and A's $1,000 September advance are netted to result in a net repayment of $3,000 for the taxable year on A's $16,000 open account debt carried forward from 2009. Because there is no net increase in 2010, no basis of indebtedness is restored for the 2010 taxable year, and A realizes $1,500 of income on the $3,000 net repayment at the close of the 2010 taxable year.

(iii) At close of the 2010 taxable year, A's open account debt does not exceed $25,000. The net repayment of $3,000 for the taxable year on A's $16,000 open account debt carried forward from 2009, leaves A with an open account debt of $13,000 to carry forward as open account debt to the beginning of the 2011 taxable year.

Example 8. Treatment of shareholder indebtedness not evidenced by a written instrument which exceeds $25,000. (i) The facts are the same as in Example 7, in addition to which, on February 1, 2011, S repays $5,000 of the open account debt and on March 1, 2011, A advances S $20,000, which is not evidenced by a written instrument.

(ii) At the close of the 2010 taxable year, A has an open account debt of $13,000 to carry forward as open account debt to the beginning of the 2011 taxable year.

(iii) The 2011 advances and repayments are netted to result in a net advance of $15,000 on A's $13,000 open account debt carried forward from 2010, increasing A's open account debt to $28,000 as of the close of the 2011 taxable year. Because A's open account debt exceeds $25,000, for any subsequent taxable year the $28,000 indebtedness will be treated in the same manner as indebtedness evidenced by a separate written instrument for the purposes of this section. Because there is no net increase in 2011, no basis of indebtedness is restored for the 2011 taxable year.

■ **Par. 3**. Section 1.1367–3 is revised to read as follows:

§ 1.1367–3 Effective/Applicability date.

Section 1.1367–2(a), (c)(2), (d)(2), and (e) *Example 6, Example 7,* and *Example 8* apply to any shareholder advances to the S corporation made on or after October 20, 2008 and repayments on those advances by the S corporation. The rules that apply with respect to shareholder advances to the S corporation made before October 20, 2008, are contained in § 1.1367–3 in effect prior to October 20, 2008. (See 26 CFR part 1 revised as of April 1, 2007.) Shareholders have the option to apply these rules to shareholder advances to the S corporation made before October 20, 2008, and repayments on those advances by the S corporation.

Approved: September 25, 2008.

Linda E. Stuff,

Deputy Commissioner for Services and Enforcement.

Eric Solomon,

Assistant Secretary of the Treasury (Tax Policy).

[FR Doc. E8–24926 Filed 10–17–08; 8:45 am]

BILLING CODE 4830–01–P

DEPARTMENT OF THE TREASURY

Internal Revenue Service

26 CFR Part 1

[TD 9424]

RIN 1545–BB61

Unified Rule for Loss on Subsidiary Stock; Correction

AGENCY: Internal Revenue Service (IRS), Treasury.

ACTION: Final regulations; Correction.

SUMMARY: This document contains corrections to final regulations (TD 9424) that were published in the **Federal Register** on Wednesday, September 17, 2008 (73 FR 53934) under sections 358, 362(e)(2), and 1502 of the Internal Revenue Code. The final regulations apply to corporations filing consolidated returns, and corporations that enter into certain tax-free reorganizations. The final regulations provide rules for determining the tax consequences of a member's transfer (including by deconsolidation and worthlessness) of loss shares of subsidiary stock. In addition, the final regulations provide that section 362(e)(2) generally does not apply to transactions between members of a consolidated group. Finally, the final regulations conform or clarify various provisions of the consolidated return regulations, including those relating to adjustments to subsidiary stock basis.

DATES: This correction is effective October 20, 2008, and is applicable on September 17, 2008.

FOR FURTHER INFORMATION CONTACT: Marcie P. Barese, (202) 622–7790, Sean P. Duffley, (202) 622–7770, or Theresa Abell (202) 622–7700 (none of the numbers are toll-free).

SUPPLEMENTARY INFORMATION:

Background

The final regulations that are the subject of this document are under sections 337, 358, 362, 1502 of the Internal Revenue Code.

Need for Correction

As published, final regulations (TD 9424) contain errors that may prove to be misleading and are in need of clarification.

Correction of Publication

Accordingly, the publication of the final regulations (TD 9424), which were the subject of FR Doc. E8–21006, is corrected as follows:

1. On page 53937, column 3, in the preamble, under the paragraph heading ''vii. Adjustments for Section 362(e)(2) Transactions'', first paragraph, line 9, the language ''not elect to apply the rule in the final'' is corrected to read ''not apply the rule in the final''.

2. On page 53938, column 3, in the preamble, under the paragraph heading ''B. Section 1.1502–36(b): Basis Redetermination Rule'', first paragraph of the column, line 1, the language ''have no correlation to unrecognized loss'' is corrected to read ''have no correlation to unrecognized gain or loss''.

3. On page 53938, column 3, in the preamble, under the paragraph heading ''B. Section 1.1502–36(b): Basis Redetermination Rule'', first paragraph of the column, line 17, the language ''contributions of assets in exchanged for'' is corrected to read ''contributions of assets in exchange for''.

4. On page 53938, column 3, in the preamble, under the paragraph heading ''i. Exceptions to Basis Redetermination Rule'', last paragraph of the column, line 7, the language ''to a nonmember in a one or more fully'' is corrected to read ''to a nonmember in one or more fully''.

5. On page 53939, column 3, in the preamble, under the paragraph heading ''i. Treatment of Intercompany Debt'', first paragraph, line 7, the language ''more like to capital transactions than'' is corrected to read ''more like capital transactions than''.

6. On page 53940, column 3, in the preamble, under the paragraph heading ''i. Lower-Tier Subsidiary Rules'', second paragraph, line 7, the language

''reason for this concern was that loss'' is corrected to read ''reasons for this concern were that loss''.

7. On page 53943, column 1, in the preamble, under the paragraph heading ''vi. Election to Reduce Stock Basis and/or Reattribute Attributes'', first paragraph of the column, line 19, the language ''to be attributed. Similar to the rule'' is corrected to read ''to be attributed. As in the rule''.

8. On page 53943, column 2, in the preamble, under the paragraph heading ''vii. The Conforming Limitation'', last paragraph of the column, line 5, the language ''rule would then either reduce lower-tier'' is corrected to read ''rule could then either reduce lower-tier''.

9. On page 53946, column 3, in the preamble, under the paragraph heading ''B. Amendments to § 1.1502–33(e) ''Whole-Group'' Exception'', first paragraph of the column, line 7, the language ''elect to apply each of these modified'' is corrected to read ''apply each of these modified''.

LaNita Van Dyke,

Chief, Publications and Regulations Branch, Legal Processing Division, Associate Chief Counsel, (Procedure and Administration).

[FR Doc. E8–24672 Filed 10–17–08; 8:45 am]

BILLING CODE 4830–01–P

DEPARTMENT OF THE TREASURY

Internal Revenue Service

26 CFR Part 1

[TD 9424]

RIN 1545–BB61

Unified Rule for Loss on Subsidiary Stock; Correction

AGENCY: Internal Revenue Service (IRS), Treasury.

ACTION: Correcting amendment.

SUMMARY: This document contains corrections to final regulations (TD 9424) that were published in the **Federal Register** on Wednesday, September 17, 2008 (73 FR 53934) under sections 358, 362(e)(2), and 1502 of the Internal Revenue Code. The final regulations apply to corporations filing consolidated returns, and corporations that enter into certain tax-free reorganizations. The final regulations provide rules for determining the tax consequences of a member's transfer (including by deconsolidation and worthlessness) of loss shares of subsidiary stock. In addition, the final regulations provide that section 362(e)(2) generally does not apply to transactions between members of a consolidated group. Finally, the final regulations conform or clarify various provisions of the consolidated return regulations, including those relating to adjustments to subsidiary stock basis.

DATES: *Effective Date:* This correction is effective October 20, 2008 and is applicable on September 17, 2008.

FOR FURTHER INFORMATION CONTACT: Marcie P. Barese, (202) 622–7790, Sean P. Duffley, (202) 622–7770, or Theresa Abell (202) 622–7700 (none of the numbers are toll-free).

SUPPLEMENTARY INFORMATION:

Background

The final regulations that are the subjects of this document are under sections 337, 358, 362, 1502 of the Internal Revenue Code.

Need for Correction

As published, final regulations (TD 9424) contain errors that may prove to be misleading and are in need of clarification.

List of Subjects in 26 CFR Part 1

Income taxes, Reporting and recordkeeping requirements.

Correction of Publication

■ Accordingly, 26 CFR part 1 is corrected by making the following correcting amendments:

PART 1—INCOME TAXES

■ **Paragraph 1.** The authority citation for part 1 continues to read, in part, as follows:

Authority: 26 U.S.C. 7805 * * *

■ **Par. 2.** Section 1.358–6(f)(3) is amended by revising the last sentence to read as follows:

§ 1.358–6 Stock basis in certain triangular reorganizations.

* * * * *

(f) * * *

(3) * * * However, taxpayers may apply paragraph (b)(2)(v) of this section to triangular reorganizations occurring before September 17, 2008 and on or after December 23, 1994.

■ **Par. 3.** Section 1.1502–13(l)(1) is amended by revising the last sentence to read as follows:

§ 1.1502–13 Intercompany transactions.

* * * * *

(l) * * *

(1) * * * However, taxpayers may apply paragraph (j)(5)(i)(A) of this section to transactions that occurred prior to September 17, 2008.

* * * * *

■ **Par. 4.** Section 1.1502–19(h)(1) is amended by revising the second sentence to read as follows:

§ 1.1502–19 Excess loss accounts.

* * * * *

(h) * * *

(1) * * * However, taxpayers may apply paragraph (c)(3)(i)(A) of this section to transactions that occurred prior to September 17, 2008. * * *

* * * * *

■ **Par. 5.** Section 1.1502–33(j)(1) is amended by revising the last sentence to read as follows:

§ 1.1502–33 Earnings and profits.

* * * * *

(j) * * *

(1) * * * However, taxpayers may apply paragraph (e)(2)(i)(A) of this section with respect to determinations of the earnings and profits of a member in consolidated return years beginning prior to September 17, 2008.

* * * * *

■ **Par. 6.** Section 1.1502–36 is amended by revising the last sentence of the paragraph (b)(3) *Example 3*.(i)(D); the fourth sentence of the paragraph (c)(8) *Example 6*.(iii)(A); (d)(3)(i)(B); the third through fifth sentences of the paragraph (d)(5)(ii); the third sentence of the paragraph (d)(8) *Example 6*.(ii)(B); the second sentence of the paragraph (d)(8) *Example 6*.(ii)(D)(3); the fifth sentence of the paragraph (d)(8) *Example 8*.(i)(F); the first sentence of the paragraph (d)(8) *Example 8*.(ii)(E); the first sentence of the paragraph (d)(8) *Example 8*.(ii)(F); the first sentence of the paragraph (d)(8) *Example 9*.(ii);the second sentence of the paragraph (g)(2) *Example 5*.(i); and the third sentence of the paragraph (g)(2) *Example 5*.(iii) to read as follows:

§ 1.1502–36 Unified loss rule.

* * * * *

(b) * * *

(3) * * *

Example 3. * * *

(i) * * *

(D) * * * The results would be the same if, in addition to the facts in paragraph (i)(A) of this *Example 3*, M transferred its S share to X in a fully taxable transaction and, as permitted under paragraph (b)(1)(ii)(B) of this section, P elected to redetermine basis under this paragraph (b).

* * * * *

(c) * * *

(8) * * *

Example 6. * * *

(iii) * * *

(A) * * * After taking into account the effects of all applicable rules of law, M's basis in the S share at the end of year 5 is $100 (M's original $100 basis decreased under § 1.1502–32 by $40 at the end of the year 1 and then increased under § 1.1502–32

by $40 at end of the year 5 (the net of the $100 tax exempt income from the excluded COD applied to reduce attributes and the $60 noncapital, nondeductible expense from the reduction of S's portion of the CNOL)).* * *

* * * * *

(d) * * *

(3) * * *

(i) * * *

(B) S's aggregate inside loss (as defined in paragraph (d)(3)(iii) of this section).

* * * * *

(5) * * *

(ii) * * * S's attribute reduction amount is allocated proportionately (by basis) between (among) the non-stock Category D asset and S's deemed single share(s) of subsidiary stock. (See paragraphs (d)(4)(ii)(B)(*2*) and (d)(4)(ii)(C) of this section regarding the portion of S's attribute reduction amount allocated to the Category D assets other than lower-tier subsidiary stock.) For allocation purposes, S's basis in each deemed single share of S1 stock is its deemed basis (determined under paragraphs (d)(5)(i)(B) and (d)(5)(i)(C) of this section), reduced by—

* * * * *

(8) * * *

Example 6. * * *

(ii) * * *

(B) * * * However, S's gain recognized on the transfer of Share E is computed and immediately adjusts members' bases in subsidiary stock under § 1.1502–32 (because M and S are not members of the same group immediately after the transaction, the sale is not an intercompany transaction subject to § 1.1502–13).

* * * * *

(D) * * *

(3) * * * See paragraph (d)(5)(v)(A) of this section.* * *

* * * * *

Example 8. * * *

(F) * * * Under § 1.1502–32(c)(1)(ii)(A)(*1*) this $90 expense is allocated to the transferred loss shares of S stock in proportion to the loss in the shares, or $.90 per share.* * *

* * * * *

(ii) * * *

(E) * * * The facts are the same as in paragraph (ii)(A) of this *Example 8*, except that P elects under paragraph (d)(6) of this section to reduce M's basis in the S shares by the full attribute reduction amount of $22, in lieu of S reducing its attributes.* * *

(F) * * * The facts are the same as in paragraph (ii)(A) of this *Example 8.****

Example 9. * * *

(ii) * * * However, S1's gain recognized on the transfer of the S2 share is computed and immediately adjusts members' bases in subsidiary stock under § 1.1502–32.

* * * * *

(g) * * *

(2) * * *

Example 5. * * *

(i) * * * S owns Asset 1 with a basis of $100 and a value of $20.* * *

(iii) * * * However, because all the shares are transferred, the group's income is clearly reflected. * * *

* * * * *

LaNita Van Dyke,

Chief, Publications and Regulations Branch, Legal Processing Division, Associate Chief Counsel (Procedure and Administration).

[FR Doc. E8–24670 Filed 10–17–08; 8:45 am]

BILLING CODE 4830–01–P

DEPARTMENT OF THE TREASURY

31 CFR Part 30

Tarp Capital Purchase Program

AGENCY: Domestic Finance, Treasury.

ACTION: Interim final rule.

SUMMARY: This interim rule, promulgated pursuant to sections 101(a)(1), 101(c)(5), and 111(b) of the Emergency Economic Stabilization Act of 2008, Division A of Public Law 110–343 (EESA), provides guidance on the executive compensation provisions applicable to participants in the Troubled Assets Relief Program (TARP) Capital Purchase Program (CPP). Section 111(b) of EESA requires financial institutions from which the Department of the Treasury (Treasury) is purchasing troubled assets through direct purchases to meet appropriate standards for executive compensation and corporate governance. This interim final rule includes the following standards for purposes of the CPP: (a) Limits on compensation that exclude incentives for senior executive officers (SEOs) of financial institutions to take unnecessary and excessive risks that threaten the value of the financial institution; (b) required recovery of any bonus or incentive compensation paid to a SEO based on statements of earnings, gains, or other criteria that are later proven to be materially inaccurate; (c) prohibition on the financial institution from making any golden parachute payment to any SEO; and (d) agreement to limit a claim to a federal income tax deduction for certain executive remuneration. These rules generally affect financial institutions that participate in the CPP, certain employers related to those financial institutions, and their officers.

DATES: *Effective Date:* These regulations are effective on October 20, 2008. *Comment due date:* November 19, 2008.

ADDRESSES: The Treasury requests comments on the topics addressed in this interim rule. Comments may be submitted to the Treasury by any of the following methods: Submit electronic comments through the federal government e-rulemaking portal, *http://www.regulations.gov* or by e-mail to *executivecompensationcomments@do.treas.gov* or send paper comments in triplicate to Executive Compensation Comments, Office of Financial Institutions Policy, Room 1418, Department of the Treasury, 1500 Pennsylvania Avenue, NW., Washington, DC 20220.

In general, the Treasury will post all comments to *http://www.regulations.gov* without change, including any business or personal information provided such as names, addresses, e-mail addresses, or telephone numbers. The Treasury will also make such comments available for public inspection and copying in the Treasury's Library, Room 1428, Main Department Building, 1500 Pennsylvania Avenue, NW., Washington, DC 20220, on official business days between the hours of 10 a.m. and 5 p.m. Eastern Time. You can make an appointment to inspect comments by telephoning (202) 622–0990. All comments, including attachments and other supporting materials, received are part of the public record and subject to public disclosure. You should submit only information that you wish to make available publicly.

FOR FURTHER INFORMATION CONTACT: For further information regarding this interim rule, contact the Office of Domestic Finance, the Treasury, at (202) 927–6618.

SUPPLEMENTARY INFORMATION:

I. Background

This document adds 31 CFR Part 30 under section 111(b) of the Emergency Economic Stabilization Act of 2008, Div. A of Public Law No. 110–343 (EESA) with respect to the Troubled Assets Relief Program (TARP) Capital Purchase Program (CPP) established by the Department of the Treasury (Treasury) under EESA. Section 101(a) of EESA authorizes the Secretary of the Treasury to establish a TARP to ''purchase, and to make and fund commitments to purchase, troubled assets from any financial institution, on such terms and conditions as are determined by the Secretary, and in accordance with this Act and policies and procedures developed and published by the Secretary.'' Section 120 of EESA provides that the TARP authorities generally terminate on December 31, 2009, unless extended upon certification by the Secretary of the Treasury to Congress, but in no event later than two years from the date of enactment of EESA (October 3, 2008)

(the TARP authorities period). Thus, the TARP authorities period is the period from October 3, 2008 to December 31, 2009 or, if extended, the period from October 3, 2008 to the date so extended, but not later than October 3, 2010.

Section 111 of EESA provides that certain financial institutions that sell assets to the Treasury may be subject to specified executive compensation standards. In the case of auction purchases from a financial institution that has sold assets in an amount that exceeds $300 million in the aggregate (including direct purchases), the financial institution is prohibited under section 111(c) of EESA from entering into any new employment contract with a senior executive officer (SEO) that provides a golden parachute to the SEO in the event of the SEO's involuntary termination, or in connection with the financial institution's bankruptcy filing, insolvency, or receivership. This prohibition applies during the TARP authorities period. The Treasury has issued separate guidance on this provision (Notice 2008–TAAP).

In addition, for auction purchases, section 302 of EESA includes tax provisions as amendments to sections 162(m) and 280G of the Internal Revenue Code (26 U.S.C. 162(m) and 280G) that address compensation paid to certain executive officers employed by financial institutions that sell assets under TARP. Section 302(a) of EESA amended 26 U.S.C. 162(m) to add a new paragraph (m)(5), which reduces the deduction limit to $500,000 in the case of ''executive remuneration'' and ''deferred deduction executive remuneration.'' This limit applies only to certain employers participating in an auction purchase and only for certain taxable years. Employers covered under 26 U.S.C. 162(m)(5) are not limited to publicly held corporations (nor even to corporations). The exception for performance-based compensation and certain other exceptions do not apply in the case of executive compensation covered under 26 U.S.C. 162(m)(5). The Treasury and the Internal Revenue Service have issued guidance on these provisions (I.R.S. Notice 2008–94).

In the case of direct purchases, section 111(b)(1) of EESA requires financial institutions to meet appropriate standards for executive compensation and corporate governance as set forth by the Secretary of the Treasury. These standards apply to the SEOs of the financial institutions while the Treasury holds an equity or debt position in the financial institution acquired under the CPP. Section 111(b)(2) of EESA requires that at least three criteria be satisfied by financial institutions from which the Treasury directly purchases troubled assets and takes a meaningful equity or debt position. The following describes these criteria.

Section 111(b)(2)(A) of EESA requires ''limits on compensation that exclude incentives for senior executive officers of a financial institution to take unnecessary and excessive risks that threaten the value of the financial institution during the period that the Secretary holds an equity or debt position in the financial institution.''

Section 111(b)(2)(B) of EESA requires ''a provision for the recovery by the financial institution of any bonus or incentive compensation paid to a senior executive officer based on statements of earnings, gains, or other criteria that are later proven to be materially inaccurate.''

Section 111(b)(2)(C) of EESA requires ''a prohibition on the financial institution making any golden parachute payment to its senior executive officer during the period that the Secretary holds an equity or debt position in the financial institution.''

Treasury Notice 2008–PSSFI addresses these provisions under section 111(b) of EESA as they apply to financial institutions participating in programs for systemically significant failing institutions. Further guidance will be issued for any additional programs.

These regulations are being issued as interim final regulations to implement the purpose of EESA, which is to provide immediately authority and facilities that the Secretary of the Treasury can use to restore liquidity and stability to the financial system of the United States. Thus, to encourage financial institutions to choose to participate in the CPP, these regulations provide those institutions with information with respect to the applicable executive compensation and corporate governance rules that will apply under the CPP.

II. This Interim Rule

These interim final regulations provide guidance on the executive compensation and corporate governance provisions of section 111(b) of EESA with respect to the CPP. They are written in question and answer format.

The regulations clarify that the requirements of section 111(b) of EESA apply not only to the financial institution that participates in the CPP, but also to any other entity in its controlled group. For this purpose, the controlled group rules in section 414(b) and (c) of the Internal Revenue Code (26 U.S.C. 414(b) and (c)) apply, but only taking into account parent-subsidiary relationships, not brother-sister relationships. These tax rules generally base control on an 80-percent ownership basis. Thus, these interim regulations apply to controlled groups in a manner similar to the executive compensation provisions of section 302(a) of EESA, which added 26 U.S.C. 162(m)(5) and 26 U.S.C. 280G(e) to the Internal Revenue Code, providing special tax treatment for executive compensation for employers participating in the TARP. See 26 U.S.C. 162(m)(5)(B)(iii) and 26 U.S.C. 280G(e)(2)(A).

The requirements in section 111(b) apply with respect to certain executive officers identified in § 30.2 (Q–2) of the regulations. The determination of these executive officers is made based on rules similar to those set forth in the federal securities laws and generally apply to the chief executive officer, the chief financial officer, and the three mostly highly compensated executive officers. The three most highly compensated executive officers are determined according to the requirements in Item 402 of Regulation S–K under the federal securities law (17 CFR 229.402) by reference to the total compensation for the last completed fiscal year. Until the compensation data for the current fiscal year are available, the financial institution should make its best efforts to identify the three most highly compensated executive officers for the current fiscal year. Analogous rules apply to financial institutions that do not have securities registered with the Securities and Exchange Commission (SEC) pursuant to the federal securities laws.

With respect to section 111(b)(2)(A) for purposes of participation in the CPP, the interim final regulations require the financial institution's compensation committee to identify the features in the financial institution's SEO incentive compensation arrangements that could lead SEOs to take unnecessary and excessive risks that could threaten the value of the financial institution. The regulations require that the compensation committee review the SEO incentive compensation arrangements with the financial institution's senior risk officers, or other personnel acting in a similar capacity, to ensure that SEOs are not encouraged to take such risks. The regulations require such review promptly, and in no case more than 90 days, after the purchase under the CPP.

The regulations also require that the compensation committee meet at least annually with the financial institution's senior risk officers to discuss and

review the relationship between the financial institution's risk management policies and practices and the SEO incentive compensation arrangements.

In addition, the regulations require the compensation committee to certify that it has completed the reviews of the SEO incentive compensation arrangements as outlined above. Financial institutions with securities registered with the SEC pursuant to the federal securities laws should provide these certifications in the Compensation Discussion and Analysis required pursuant to Item 402(b) of Regulation S–K under the federal securities laws (17 CFR 229.402). Those financial institutions that do not have securities registered with the SEC pursuant to the federal securities laws are required to provide the certifications to their primary regulatory agency.

With respect to section 111(b)(2)(B) of EESA for purposes of participation in the CPP, the interim final regulations provide that the SEO bonus and incentive compensation paid during the period that the Treasury holds an equity or debt position acquired under the CPP must be subject to recovery or ''clawback'' by the financial institution if the payments were based on materially inaccurate financial statements and any other materially inaccurate performance metric criteria. The regulations include a comparison of this requirement to section 304 of the Sarbanes-Oxley Act of 2002 (Sarbanes-Oxley) (Pub. L. 107–204).

With respect to section 111(b)(2)(C) of EESA for purposes of participation in the CPP, the interim final regulations prohibit a financial institution from making any golden parachute payment to a SEO during the period the Treasury holds an equity or debt position acquired under the CPP. The regulations define a golden parachute payment in the same way as under 26 U.S.C. 280G as applied with respect to new paragraph (e) of 26 U.S.C. 280G, added by section 302(a) of EESA relating to golden parachute payments. Thus, a golden parachute payment means any payment in the nature of compensation to (or for the benefit of) a SEO made on account of an applicable severance from employment to the extent the aggregate present value of such payments equals or exceeds an amount equal to three times the SEO's base amount. The term ''base amount'' for a SEO has the meaning set forth in 26 U.S.C. 280G(b)(3) and 26 CFR 1.280G–1, Q&A–34 (except that references to ''change in ownership or control'' are treated as referring to an ''applicable severance from employment'').

The regulations define an applicable severance from employment as any SEO's severance from employment with the financial institution (i) by reason of involuntary termination of employment with the financial institution or with an entity that is treated as the same employer as the financial institution under the controlled group rules or (ii) in connection with any bankruptcy filing, insolvency, or receivership of the financial institution or of an entity that is treated as the same employer as the financial institution under the controlled group rules. The regulations define an involuntary termination of employment and set forth rules for determining when a payment on account of an applicable severance from employment occurs. These rules are substantially the same as the standards in IRS Notice 2008–94 regarding new paragraph (e) of 26 U.S.C. 280G, and are also generally similar to the pre-existing standards under 26 U.S.C. 280G (see 26 CFR 1.280G–1, Q&A–22(a)).

The regulations include a special rule for cases in which a financial institution (target) that has sold troubled assets to the Treasury through the CPP is acquired by an entity (acquirer) in an acquisition of any form. Under this rule, acquirer does not become subject to section 111(b) of EESA merely as a result of the acquisition. The rule applies only if the acquirer is not related to target and treats target as related if stock or other interests of target are treated (under 26 U.S.C. 318(a) other than paragraph (4) thereof) as owned by acquirer. With respect to target, any employees of target who are SEOs prior to the acquisition will be subject to section 111(b) of EESA until after the first anniversary following the acquisition.

The regulations set forth an additional standard for executive compensation and corporate governance under section 111(b)(1) of EESA. Under this standard, the financial institution must agree, as a condition to participate in the CPP, that no deduction will be claimed for federal income tax purposes for remuneration that would not be deductible if 26 U.S.C. 162(m)(5) were to apply to the financial institution. For this purpose, during the period that the Treasury holds an equity or debt position in the financial institution acquired under the CPP: (i) The financial institution (including entities in its controlled group) is treated as an ''applicable employer,'' (ii) its SEOs are treated as ''covered executives,'' and (iii) any taxable year that includes any portion of that period is treated as an ''applicable taxable year,'' each as defined in 26 U.S.C. 162(m)(5), except that the dollar limitation and the remuneration for the taxable year are prorated for the portion of the taxable year that the Treasury holds an equity or debt position in the financial institution under the CPP. The Secretary has determined that this is an appropriate standard for executive compensation for the CPP. This rule only applies for taxable years that include the period that the Treasury holds an equity or debt position in the financial institution acquired under the CPP. This standard applies even though the financial institution is not subject to 26 U.S.C. 162(m)(5) and only limits the amount of the deduction that may be claimed. Thus, no deduction may be claimed for remuneration during a taxable year for compensation in excess of $500,000 for a SEO, and the special rules relating to deferred deduction executive remuneration would also apply. See I.R.S. Notice 2008–94 for additional information regarding the deduction limit under 26 U.S.C. 162(m)(5).

III. Procedural Requirements

Justification for Interim Rulemaking

This rule is promulgated pursuant to EESA, the purpose of which is to immediately provide authority and facilities that the Secretary of the Treasury can use to restore liquidity and stability to the financial system of the United States. Specifically, this rule implements certain provisions of section 111 of EESA, which sets forth executive compensation standards for financial institutions that sell troubled assets to the Treasury under EESA. The statute provides that the Secretary may issue guidance and regulations to carry out these provisions and that such guidance and regulations may be effective upon issuance.

In order to encourage financial institutions to choose to participate in the CPP, those institutions must have timely and reliable information with respect to the applicable executive compensation and corporate governance rules that will apply under the program. Accordingly, because EESA authorizes section 111 guidance to be immediately effective and because of exigencies in the financial markets, the Treasury finds that it would be contrary to the public interest, pursuant to 5 U.S.C. 553(b)(B), to delay the issuance of this rule pending an opportunity for public comment and good cause exists to dispense with this requirement. For the same reasons, pursuant to 5 U.S.C. 553(d)(3), the Treasury has determined that there is good cause for the interim final rule to become effective

immediately upon publication. While this regulation is effective immediately upon publication, the Treasury is inviting public comment on the regulation during a thirty-day period and will consider all comments in developing a final rule.

Regulatory Planning and Review

The rule does not meet the criteria for a ''significant regulatory action'' as defined in Executive Order 12866. Therefore, the regulatory review procedures contained therein do not apply.

Regulatory Flexibility Act

Because no notice of proposed rulemaking is required, this rule is not subject to the provisions of the Regulatory Flexibility Act (5 U.S.C chapter 6).

List of Subjects in 31 CFR Part 30

Executive compensation, Troubled assets.

■ For the reasons set out in the preamble, Title 31 of the CFR is amended as follows:

PART 30—TARP CAPITAL PURCHASE PROGRAM

■ 1. Add part 30 to read as follows:

PART 30—TARP CAPITAL PURCHASE PROGRAM

Sec.

30.0 Executive compensation and corporate governance.
30.1 Q–1: To what financial institutions does this part apply?
30.2 Q–2: Who is a senior executive officer (SEO) under section 111 of EESA?
30.3 Q–3: What actions are necessary for a financial institution participating in the CPP to comply with section 111(b)(2)(A) of EESA?
30.4 Q–4: How should the financial institution comply with the standard under *§ 30.3* that the compensation committee, or a committee acting in a similar capacity, review the SEO incentive compensation arrangements to ensure that the SEO incentive compensation arrangements do not encourage the SEOs to take unnecessary and excessive risks that threaten the value of the financial institution?
30.5 Q–5: How should the financial institution comply with the certification requirements under *§ 30.3* of this section?
30.6 Q–6: What actions are necessary for a financial institution participating in the CPP to comply with section 111(b)(2)(B) of EESA?
30.7 Q–7: How do the standards under section 111(b)(2)(B) of EESA differ from section 304 of the Sarbanes-Oxley Act of 2002 (Sarbanes-Oxley) (Pub. Law No. 107–204)?
30.8 Q–8: What actions are necessary for a financial institution participating in the CPP to comply with section 111(b)(2)(C) of EESA?
30.9 Q–9: What is a golden parachute payment under section 111(b) of EESA?
30.10 Q–10: Are there other conditions that are required under the executive compensation and corporate governance standards in section 111(b)(1) of EESA?
30.11 Q–11: How does section 111(b) of EESA operate in connection with an acquisition, merger, or reorganization?

Authority: Section 111(b) of the Emergency Economic Stabilization Act of 2008, Div. A of Public Law 110–343; 122 Stat 3765.

§ 30.0 Executive compensation and corporate governance.

The following questions and answers reflect the executive compensation and corporate governance requirements of section 111(b) of the Emergency Economic Stabilization Act of 2008, Div. A of Public Law No. 110–343 (EESA) with respect to participation in the Troubled Assets Relief Program (TARP) Capital Purchase Program (CPP) established by the Treasury thereunder:

§ 30.1 Q–1: To what financial institutions does this part apply?

(a) *General rule.* This part applies to any financial institution that participates in the CPP.

(b) *Controlled group rules.* For purposes of section 111(b) of EESA, two or more persons who are treated as a single employer under section 26 U.S.C. 414(b) (employees of a controlled group of corporations) and section 26 U.S.C. 414(c) (employees of partnerships, proprietorships, etc., that are under common control) are treated as a single employer. However, for purposes of section 111(b) of EESA, the rules for brother-sister controlled groups and combined groups are disregarded (including disregarding the rules in section 26 U.S.C. 1563(a)(2) and (a)(3) with respect to corporations and the parallel rules that are in section 26 CFR 1.414(c)–2(c) with respect to other organizations conducting trades or businesses). See § 30.11 (Q–11) of this part for special rules where a financial institution is acquired.

§ 30.2 Q–2: Who is a senior executive officer (SEO) under section 111 of EESA?

(a) *General definition.* A SEO means a ''named executive officer'' as defined in Item 402 of Regulation S–K under the federal securities laws (17 CFR 229.402) who:

(1) Is employed by a financial institution that is participating in the CPP while the Treasury holds an equity or debt position acquired under the CPP; and

(2)(i) Is the principal executive officer (PEO) (or person acting in a similar capacity) of such financial institution (or, in the case of a controlled group, of the parent entity);

(ii) The principal financial officer (PFO) (or person acting in a similar capacity) of such financial institution (or, in the case of a controlled group, of the parent entity); or

(iii) One of the three most highly compensated executive officers of such financial institution (or the financial institution's controlled group) other than the PEO or the PFO.

(b) *Determination of three most highly compensated executive officers.* For financial institutions with securities registered with the Securities and Exchange Commission (SEC) pursuant to the federal securities law, the three most highly compensated executive officers are determined according to the requirements in Item 402 of Regulation S–K under the federal securities laws (17 CFR 229.402). The term ''executive officer'' has the same meaning as defined in Rule 3b–7 of the Securities Exchange Act of 1934 (Exchange Act) (17 CFR 240.3b–7). For purposes of determining the three most highly compensated executive officers, compensation is determined as it is in Item 402 of Regulation S–K to include total compensation for the last completed fiscal year without regard to whether the compensation is includible in the executive officer's gross income. Until the compensation data for the current fiscal year are available, the financial institution should make its best efforts to identify the three most highly compensated executive officers for the current fiscal year.

(c) *Application to private employers.* Rules analogous to the rules in paragraphs (a) and (b) of this section apply to financial institutions that are not subject to the federal securities laws, rules, and regulations, including financial institutions that do not have securities registered with the SEC pursuant to the federal securities laws.

§ 30.3 Q–3: What actions are necessary for a financial institution participating in the CPP to comply with section 111(b)(2)(A) of EESA?

(a) In order to comply with section 111(b)(2)(A) of EESA for purposes of participation in the CPP, a financial institution must comply with the following rules:

(1) Promptly, and in no case more than 90 days, after the purchase under the CPP, the financial institution's compensation committee, or a committee acting in a similar capacity, must review the SEO incentive

compensation arrangements with such financial institution's senior risk officers, or other personnel acting in a similar capacity, to ensure that the SEO incentive compensation arrangements do not encourage SEOs to take unnecessary and excessive risks that threaten the value of the financial institution;

(2) Thereafter, the compensation committee, or a committee acting in a similar capacity, must meet at least annually with senior risk officers, or individuals acting in a similar capacity, to discuss and review the relationship between the financial institution's risk management policies and practices and the SEO incentive compensation arrangements; and

(3) The compensation committee, or a committee acting in a similar capacity, must certify that it has completed the reviews of the SEO incentive compensation arrangements required under paragraphs (a)(1) and (2) of this section.

(b) These rules apply while the Treasury holds an equity or debt position acquired under the CPP.

§ 30.4 Q–4: How should the financial institution comply with the standard under § 30.3 that the compensation committee, or a committee acting in a similar capacity, review the SEO incentive compensation arrangements to ensure that the SEO incentive compensation arrangements do not encourage the SEOs to take unnecessary and excessive risks that threaten the value of the financial institution?

Because each financial institution faces different material risks given the unique nature of its business and the markets in which it operates, the compensation committee, or a committee acting in a similar capacity, should discuss with the financial institution's senior risk officers, or other personnel acting in a similar capacity, the risks (including long-term as well as short-term risks) that such financial institution faces that could threaten the value of the financial institution. The compensation committee, or a committee acting in a similar capacity, should identify the features in the financial institution's SEO incentive compensation arrangements that could lead SEOs to take such risks. Any such features should be limited in order to ensure that the SEOs are not encouraged to take risks that are unnecessary or excessive.

§ 30.5 Q–5: How should the financial institution comply with the certification requirements under § 30.3?

(a) *Certification.* The compensation committee, or a committee acting in a similar capacity, of the financial institution must provide the certifications required by § 30.3 (Q–3) stating that it has reviewed, with such financial institution's senior risk officers, the SEO incentive compensation arrangements to ensure that the incentive compensation arrangements do not encourage SEOs to take unnecessary and excessive risks. Providing a statement similar to the following and in the manner provided in paragraphs (b) and (c) of this section, as applicable, would satisfy this standard: ''The compensation committee certifies that it has reviewed with senior risk officers the SEO incentive compensation arrangements and has made reasonable efforts to ensure that such arrangements do not encourage SEOs to take unnecessary and excessive risks that threaten the value of the financial institution.''

(b) *Location.* For financial institutions with securities registered with the SEC pursuant to the federal securities law, the compensation committee, or a committee acting in a similar capacity, should provide this certification in the Compensation Discussion and Analysis required pursuant to Item 402(b) of Regulation S–K under the federal securities laws (17 CFR 229.402).

(c) *Application to private financial institutions.* The rules provided in this section are also applicable to financial institutions that are not subject to the federal securities laws, rules, and regulations, including financial institutions that do not have securities registered with the SEC pursuant to the federal securities laws. A private financial institution should file the certification of the compensation committee, or a committee acting in a similar capacity, with its primary regulatory agency.

§ 30.6 Q–6: What actions are necessary for a financial institution participating in the CPP to comply with section 111(b)(2)(B) of EESA?

In order to comply with section 111(b)(2)(B) of EESA for purposes of participation in the CPP, a financial institution must require that SEO bonus and incentive compensation paid during the period that the Treasury holds an equity or debt position acquired under the CPP are subject to recovery or ''clawback'' by the financial institution if the payments were based on materially inaccurate financial statements or any other materially inaccurate performance metric criteria.

§ 30.7 Q–7: How do the standards under section 111(b)(2)(B) of EESA differ from section 304 of the Sarbanes-Oxley Act of 2002 (Sarbanes-Oxley) (Pub. Law No. 107–204)?

Section 304 of Sarbanes-Oxley requires the forfeiture by a public company's chief executive officer and the chief financial officer of any bonus, incentive-based compensation, or equity-based compensation received and any profits from sales of the company's securities during the twelve-month period following a materially non-compliant financial report. Section 111(b)(2)(B) of EESA differs from section 304 of Sarbanes-Oxley in several ways. The standard under section 111(b)(2)(B) of EESA: Applies to the three most highly compensated executive officers in addition to the PEO and the PFO; applies to both public and private financial institutions; is not exclusively triggered by an accounting restatement; does not limit the recovery period; and covers not only material inaccuracies relating to financial reporting but also material inaccuracies relating to other performance metrics used to award bonuses and incentive compensation.

§ 30.8 Q–8: What actions are necessary for a financial institution participating in the CPP to comply with section 111(b)(2)(C) of EESA?

In order to comply with section 111(b)(2)(C) of EESA for purposes of participation in the CPP, a financial institution must prohibit any golden parachute payment to a SEO during the period the Treasury holds an equity or debt position acquired under the CPP.

§ 30.9 Q–9: What is a golden parachute payment under section 111(b) of EESA?

(a) *Definition.* As provided under 26 U.S.C. 280G(e), a ''golden parachute payment'' means any payment in the nature of compensation to (or for the benefit of) a SEO made on account of an applicable severance from employment to the extent the aggregate present value of such payments equals or exceeds an amount equal to three times the SEO's base amount. The term ''base amount'' for a SEO has the meaning set forth in 26 U.S.C. 280G(b)(3) and 26 CFR 1.280G–1, Q&A–34, except that references to ''change in ownership or control'' are treated as referring to an ''applicable severance from employment.''

(b) *Applicable severance from employment.* (1) *Definition.* An applicable severance from employment means any SEO's severance from employment with the financial institution.

(i) By reason of involuntary termination of employment with the financial institution or with an entity that is treated as the same employer as the financial institution under § 30.1 (Q–1) of this part; or

(ii) In connection with any bankruptcy filing, insolvency, or receivership of the financial institution or of an entity that is treated as the same employer as the financial institution under § 30.1 (Q–1) of this part.

(2) *Involuntary termination.* (i) An involuntary termination from employment means a termination from employment due to the independent exercise of the unilateral authority of the employer to terminate the SEO's services, other than due to the SEO's implicit or explicit request to terminate employment, where the SEO was willing and able to continue performing services. An involuntary termination from employment may include the financial institution's failure to renew a contract at the time such contract expires, provided that the SEO was willing and able to execute a new contract providing terms and conditions substantially similar to those in the expiring contract and to continue providing such services. In addition, a SEO's voluntary termination from employment constitutes an involuntary termination from employment if the termination from employment constitutes a termination for good reason due to a material negative change in the SEO's employment relationship. See 26 CFR 1.409A–1(n)(2).

(ii) A severance from employment by a SEO is by reason of involuntary termination even if the SEO has voluntarily terminated employment in any case where the facts and circumstances indicate that absent such voluntary termination the financial institution would have terminated the SEO's employment and the SEO had knowledge that he or she would be so terminated.

(c) *Payments on account of an applicable severance from employment.* (1) *Definition.* A payment on account of an applicable severance from employment means a payment that would not have been payable if no applicable severance from employment had occurred (including amounts that would otherwise have been forfeited if no applicable severance from employment had occurred) and amounts that are accelerated on account of the applicable severance from employment. See 26 CFR 1.280G–1, Q&A–24(b), for rules regarding the determination of the amount that is on account of an acceleration.

(2) *Excluded amounts.* Payments on account of an applicable severance from employment do not include amounts paid to a SEO under a tax qualified retirement plan.

§ 30.10 Q–10: Are there other conditions that are required under the executive compensation and corporate governance standards in section 111(b)(1) of EESA?

The financial institution must agree, as a condition to participate in the CPP, that no deduction will be claimed for federal income tax purposes for remuneration that would not be deductible if 26 U.S.C. 162(m)(5) were to apply to the financial institution. For this purpose, during the period that the Treasury holds an equity or debt position in the financial institution acquired under the CPP:

(a) The financial institution (including entities in its controlled group) is treated as an ''applicable employer,''

(b) Its SEOs are treated as ''covered executives,'' and

(c) Any taxable year that includes any portion of that period is treated as an ''applicable taxable year,'' each as defined in 26 U.S.C. 162(m)(5), except that the dollar limitation and the remuneration for the taxable year are prorated for the portion of the taxable year that the Treasury holds an equity or debt position in the financial institution under the CPP.

§ 30.11 Q–11: How does section 111(b) of EESA operate in connection with an acquisition, merger, or reorganization?

(a) *Special rules for acquisitions, mergers, or reorganizations.* In the event that a financial institution (target) that had sold troubled assets to the Treasury through the CPP is acquired by an entity that is not related to target (acquirer) in an acquisition of any form, acquirer will not become subject to section 111(b) of EESA merely as a result of the acquisition. For this purpose, an acquirer is related to target if stock or other interests of target are treated (under 26 U.S.C. 318(a) other than paragraph (4) thereof) as owned by acquirer. With respect to the target, any employees of target who are SEOs prior to the acquisition will be subject to section 111(b)(2)(C) of EESA until after the first anniversary following the acquisition.

(b) Example. In 2008, financial institution A sells $100 million of troubled assets to the Treasury through the CPP. In January 2009, financial institution B, which is not otherwise subject to section 111(b) of EESA, acquires financial institution A in a stock purchase transaction, with the result that financial institution A becomes a wholly owned subsidiary of financial institution B. Based on the rules in paragraph (a) of this § 30.11 (Q–11), the SEOs of financial institution B are not subject to section 111(b) of EESA solely as a result of the acquisition of financial institution A in January 2009. The SEOs of financial institution A at the time of the acquisition are subject to section 111(b)(2)(C) of EESA until January 2010, the first anniversary following the acquisition.

Dated: October 14, 2008.

Neel Kashkari,

Interim Assistant Secretary for Financial Stability.

[FR Doc. E8–24781 Filed 10–15–08; 11:15 am]

BILLING CODE 4810–25–P

DEPARTMENT OF HEALTH AND HUMAN SERVICES

Centers for Disease Control and Prevention

42 CFR Part 34

[Docket No. CDC–2008–0002]

RIN 0920–AA20

Medical Examination of Aliens—Revisions to Medical Screening Process

AGENCY: Centers for Disease Control and Prevention, U.S. Department of Health and Human Services.

ACTION: Correcting amendments.

SUMMARY: The Centers for Disease Control and Prevention (CDC), within the U.S. Department of Health and Human Services (HHS), published an Interim Final Rule in the **Federal Register** on October 6, 2008 (73 FR 58047), updating regulations that govern medical examinations that aliens must undergo before they may be admitted to the United States. This document corrects an omission contained in the rule.

DATES: Effective on October 20, 2008.

FOR FURTHER INFORMATION, CONTACT: Stacy M. Howard, Division of Global Migration and Quarantine, Centers for Disease Control and Prevention, U.S. Department of Health and Human Services, 1600 Clifton Road, NE., E03, Atlanta, GA 30333; telephone 404–498–1600.

SUPPLEMENTARY INFORMATION: The Centers for Disease Control and Prevention (CDC), within the U.S. Department of Health and Human Services (HHS), published an Interim Final Rule in the **Federal Register** of October 6, 2008, FR Doc. E8–23485, (73 FR 58047) updating regulations that govern medical examinations that aliens must undergo before they may be

admitted to the United States. CDC inadvertently omitted an exception to the chest x-ray examination for aliens in the United States who apply for adjustment of status to permanent resident. CDC is publishing this correction to clarify that an alien of any age in the United States who applies for adjustment of status to permanent resident shall not be required to have a chest x-ray examination unless their tuberculin skin test, or an equivalent test that shows an immune response to *Mycobacterium tuberculosis,* is positive.

List of Subjects in 42 CFR Part 34

Aliens, Health care, Scope of examination, Passports and visas, Public health.

■ Accordingly, 42 CFR part 34 is corrected by making the following correcting amendments:

PART 34—MEDICAL EXAMINATION OF ALIENS

■ 1. The authority citation for part 34 continues to read as follows:

Authority: 42 U.S.C. 252; 8 U.S.C. 1182 and 1222.

■ 2. Amend § 34.3 by revising paragraph (e)(2)(iv) to read as follows:

§ 34.3 Scope of examinations.

* * * * *

(e) * * *

(2) * * *

(iv) *Exceptions.* Serologic testing for syphilis and HIV shall not be required if the alien is under the age of 15, unless there is a reason to suspect infection with syphilis or HIV. An alien, regardless of age, in the United States who applies for adjustment of status to lawful permanent resident shall not be required to have a chest x-ray examination unless their tuberculin skin test, or an equivalent test for showing an immune response to *Mycobacterium tuberculosis* antigens, is positive. HHS/CDC may authorize exceptions to the requirement for a tuberculin skin test, an equivalent test for showing an immune response to *Mycobacterium tuberculosis* antigens, or chest X-ray examination for good cause, upon application approved by the Director.

* * * * *

Dated: October 14, 2008.

Ann C. Agnew,

Executive Secretary, Department of Health and Human Services.

[FR Doc. E8–24797 Filed 10–17–08; 8:45 am]

BILLING CODE 4163–18–P

DEPARTMENT OF DEFENSE

Defense Acquisition Regulations System

48 CFR Parts 215 and 252

RIN 0750–AF40

Defense Federal Acquisition Regulation Supplement; Evaluation Factor for Use of Members of the Selected Reserve (DFARS Case 2006–D014)

AGENCY: Defense Acquisition Regulations System, Department of Defense (DoD).

ACTION: Final rule.

SUMMARY: DoD has issued a final rule amending the Defense Federal Acquisition Regulation Supplement (DFARS) to implement Section 819 of the National Defense Authorization Act for Fiscal Year 2006. Section 819 authorizes DoD to use an evaluation factor that considers whether an offeror intends to perform a contract using employees or individual subcontractors who are members of the Selected Reserve.

DATES: *Effective Date:* October 20, 2008.

FOR FURTHER INFORMATION CONTACT: Mr. Michael Benavides, Defense Acquisition Regulations System, OUSD (AT&L) DPAP (DARS), IMD 3D139, 3062 Defense Pentagon, Washington, DC 20301–3062. Telephone 703–602–1302; facsimile 703–602–7887. Please cite DFARS Case 2006–D014.

SUPPLEMENTARY INFORMATION:

A. Background

This final rule implements Section 819 of the National Defense Authorization Act for Fiscal Year 2006 (Pub. L. 109–163). Section 819 authorizes DoD to use an evaluation factor that considers whether an offeror intends to perform a contract using employees or individual subcontractors who are members of the Selected Reserve, and requires offerors to submit documentation supporting any stated intent to use such employees or subcontractors. The rule contains a solicitation provision and a contract clause addressing the evaluation factor and the obligations of a contractor awarded a contract based on the evaluation factor.

DoD published a proposed rule at 72 FR 51209 on September 6, 2007. DoD received no comments on the proposed rule. Therefore, DoD has adopted the proposed rule as a final rule without change.

This rule was not subject to Office of Management and Budget review under Executive Order 12866, dated September 30, 1993.

B. Regulatory Flexibility Act

DoD certifies that this final rule will not have a significant economic impact on a substantial number of small entities within the meaning of the Regulatory Flexibility Act, 5 U.S.C. 601, *et seq.*, because use of the evaluation factor is discretionary and is not expected to affect a significant number of acquisitions.

C. Paperwork Reduction Act

This final rule contains a new information collection requirement. The Office of Management and Budget has approved the information collection under Control Number 0704–0446.

List of Subjects in 48 CFR Parts 215 and 252

Government procurement.

Michele P. Peterson

Editor, Defense Acquisition Regulations System.

■ Therefore, 48 CFR Parts 215 and 252 are amended as follows:

■ 1. The authority citation for 48 CFR Parts 215 and 252 continues to read as follows:

Authority: 41 U.S.C. 421 and 48 CFR Chapter 1.

PART 215—CONTRACTING BY NEGOTIATION

■ 2. Sections 215.370 through 215.370–3 are added to read as follows:

215.370 Evaluation factor for employing or subcontracting with members of the Selected Reserve.

215.370–1 Definition.

Selected Reserve, as used in this section, is defined in the provision at 252.215–7005, Evaluation Factor for Employing or Subcontracting with Members of the Selected Reserve.

215.370–2 Evaluation factor.

In accordance with Section 819 of the National Defense Authorization Act for Fiscal Year 2006 (Pub. L. 109–163), the contracting officer may use an evaluation factor that considers whether an offeror intends to perform the contract using employees or individual subcontractors who are members of the Selected Reserve. See PGI 215.370–2 for guidance on use of this evaluation factor.

215.370–3 Solicitation provision and contract clause.

(a) Use the provision at 252.215–7005, Evaluation Factor for Employing or Subcontracting with Members of the

Selected Reserve, in solicitations that include an evaluation factor considering whether an offeror intends to perform the contract using employees or individual subcontractors who are members of the Selected Reserve.

(b) Use the clause at 252.215–7006, Use of Employees or Individual Subcontractors Who are Members of the Selected Reserve, in solicitations that include the provision at 252.215–7005. Include the clause in the resultant contract only if the contractor stated in its proposal that it intends to perform the contract using employees or individual subcontractors who are members of the Selected Reserve, and that statement was used as an evaluation factor in the award decision.

PART 252—SOLICITATION PROVISIONS AND CONTRACT CLAUSES

■ 3. Sections 252.215–7005 and 252.215–7006 are added to read as follows:

252.215–7005 Evaluation Factor for Employing or Subcontracting With Members of the Selected Reserve.

As prescribed in 215.370–3(a), use the following provision:

Evaluation Factor for Employing or Subcontracting With Members of the Selected Reserve (Oct 2008)

(a) *Definition. Selected Reserve*, as used in this provision, has the meaning given that term in 10 U.S.C. 10143. Selected Reserve members normally attend regular drills throughout the year and are the group of Reserves most readily available to the President.

(b) This solicitation includes an evaluation factor that considers the offeror's intended use of employees, or individual subcontractors, who are members of the Selected Reserve.

(c) If the offeror, in the performance of any contract resulting from this solicitation, intends to use employees or individual subcontractors who are members of the Selected Reserve, the offeror's proposal shall include documentation to support this intent. Such documentation may include, but is not limited to—

(1) Existing company documentation, such as payroll or personnel records, indicating the names of the Selected Reserve members who are currently employed by the company; or

(2) A statement that one or more positions will be set aside to be filled by new hires of Selected Reserve members, along with verifying documentation.

(End of provision)

252.215–7006 Use of Employees or Individual Subcontractors Who Are Members of the Selected Reserve.

As prescribed in 215.370–3(b), use the following clause:

Use of Employees or Individual Subcontractors Who Are Members of the Selected Reserve (Oct 2008)

(a) *Definition. Selected Reserve*, as used in this clause, has the meaning given that term in 10 U.S.C. 10143. Selected Reserve members normally attend regular drills throughout the year and are the group of Reserves most readily available to the President.

(b) If the Contractor stated in its offer that it intends to use members of the Selected Reserve in the performance of this contract—

(1) The Contractor shall use employees, or individual subcontractors, who are members of the Selected Reserve in the performance of the contract to the fullest extent consistent with efficient contract performance; and

(2) The Government has the right to terminate the contract for default if the Contractor willfully or intentionally fails to use members of the Selected Reserve, as employees or individual subcontractors, in the performance of the contract.

(End of clause)

[FR Doc. E8–24480 Filed 10–17–08; 8:45 am]

BILLING CODE 5001–08–P

DEPARTMENT OF COMMERCE

National Oceanic and Atmospheric Administration

50 CFR Part 679

[Docket No. 071106671–8010–02]

RIN 0648–XL33

Fisheries of the Exclusive Economic Zone Off Alaska; Hook–and–Line Gear in the Gulf of Alaska

AGENCY: National Marine Fisheries Service (NMFS), National Oceanic and Atmospheric Administration (NOAA), Commerce.

ACTION: Temporary rule; closure.

SUMMARY: NMFS is prohibiting directed fishing for groundfish by vessels using hook–and–line gear in the Gulf of Alaska (GOA), except for demersal shelf rockfish in the Southeast Outside District or sablefish in the GOA. This action is necessary to prevent exceeding the 2008 Pacific halibut prohibited species catch (PSC) limit specified for vessels using hook–and–line gear targeting groundfish other than demersal shelf rockfish in the Southeast Outside District or sablefish in the GOA.

DATES: Effective 1200 hrs, Alaska local time (A.l.t.), October 16, 2008, through 2400 hrs, A.l.t., December 31, 2008.

FOR FURTHER INFORMATION CONTACT: Josh Keaton, 907–586–7228.

SUPPLEMENTARY INFORMATION: NMFS manages the groundfish fishery in the GOA exclusive economic zone according to the Fishery Management Plan for Groundfish of the Gulf of Alaska (FMP) prepared by the North Pacific Fishery Management Council under authority of the Magnuson–Stevens Fishery Conservation and Management Act. Regulations governing fishing by U.S. vessels in accordance with the FMP appear at subpart H of 50 CFR part 600 and 50 CFR part 679.

The 2008 Pacific halibut PSC limit allocated to vessels using hook–and–line gear targeting groundfish other than demersal shelf rockfish in the Southeast Outside District or sablefish in the GOA was established as 290 metric tons by the 2008 and 2009 harvest specifications for groundfish of the GOA (73 FR 10562, February 27, 2008).

In accordance with § 679.21(d)(7)(ii), the Regional Administrator has determined that the 2008 Pacific halibut PSC limit allocated to vessels using hook–and–line gear targeting groundfish other than demersal shelf rockfish in the Southeast Outside District or sablefish in the GOA will soon be reached. Therefore, NMFS is prohibiting directed fishing for groundfish by vessels using hook–and–line gear in the Gulf of Alaska (GOA), except for demersal shelf rockfish in the Southeast Outside District or sablefish in the GOA.

After the effective date of this closure, the maximum retainable amounts at 50 CFR 679.20(e) and (f) apply at any time during a trip for vessels fishing for demersal shelf rockfish in the Southeast Outside District or sablefish in the GOA.

Classification

This action responds to the best available information recently obtained from the fishery. The Assistant Administrator for Fisheries, NOAA, (AA), finds good cause to waive the requirement to provide prior notice and opportunity for public comment pursuant to the authority set forth at 5 U.S.C. 553(b)(B) as such a requirement is impracticable and contrary to the public interest. This requirement is impracticable and contrary to the public interest as it would prevent NMFS from responding to the most recent fisheries data in a timely fashion and would delay closing directed fishing for groundfish by vessels using hook–and–line gear in the GOA. NMFS was unable to publish a notice providing time for public comment because the most recent, relevant data only became available as of October 14, 2008.

The AA also finds good cause to waive the 30-day delay in the effective date of this action under 5 U.S.C. 553(d)(3). This finding is based upon the reasons provided above for waiver of

prior notice and opportunity for public comment.

This action is required by § 679.21 and is exempt from review under Executive Order 12866.

Authority: 16 U.S.C. 1801 *et seq.*

Dated: October 15, 2008.

Emily H. Menashes,

Acting Director, Office of Sustainable Fisheries, National Marine Fisheries Service.

[FR Doc. E8–24905 Filed 10–15–08; 8:45 am]

BILLING CODE 3510–22–S

Proposed Rules

Federal Register
Vol. 73, No. 203
Monday, October 20, 2008

This section of the FEDERAL REGISTER contains notices to the public of the proposed issuance of rules and regulations. The purpose of these notices is to give interested persons an opportunity to participate in the rule making prior to the adoption of the final rules.

DEPARTMENT OF HOMELAND SECURITY

6 CFR Part 5

[Docket No. DHS–2008–0095]

Privacy Act of 1974: Implementation of Exemptions; Grievances, Appeals, and Disciplinary Action System of Records

AGENCY: Department of Homeland Security.

ACTION: Notice of proposed rulemaking.

SUMMARY: The Department of Homeland Security (DHS) is giving concurrent notice of a revised and updated system of records pursuant to the Privacy Act of 1974 for the Department of Homeland Security Grievances, Appeals, and Disciplinary Action system of records and this proposed rulemaking. In this proposed rulemaking, the Department proposes to exempt portions of the system of records from one or more provisions of the Privacy Act because of criminal, civil, and administrative enforcement requirements.

DATES: Comments must be received on or before November 19, 2008.

ADDRESSES: You may submit comments, identified by docket number DHS–2008–0095, by one of the following methods:

- *Federal e-Rulemaking Portal: http://www.regulations.gov.* Follow the instructions for submitting comments.
- *Fax:* 1–866–466–5370.
- *Mail:* Hugo Teufel III, Chief Privacy Officer, Department of Homeland Security, Washington, DC 20528.

Instructions: All submissions received must include the agency name and docket number for this notice. All comments received will be posted without change to *http://www.regulations.gov*, including any personal information provided.

Docket: For access to the docket to read background documents or comments received, go to *http://www.regulations.gov.*

FOR FURTHER INFORMATION CONTACT: For general questions and privacy issues, please contact: Hugo Teufel III (703–235–0780), Chief Privacy Officer, Privacy Office, U.S. Department of Homeland Security, Washington, DC 20528.

SUPPLEMENTARY INFORMATION:

Background: Pursuant to the savings clause in the Homeland Security Act of 2002, Public Law 107–296, Section 1512, 116 Stat. 2310 (November 25, 2002), the Department of Homeland Security (DHS) and its components and offices have relied on preexisting Privacy Act systems of records notices for the collection and maintenance of records concerning files relating to employee grievances, appeals, and disciplinary action.

As part of its efforts to streamline and consolidate its Privacy Act record systems, DHS is establishing a new agency-wide system of records under the Privacy Act (5 U.S.C. 552a) for DHS grievances, appeals, and disciplinary actions. This will ensure that all components of DHS follow the same privacy rules for collecting and handling grievances, appeals, and disciplinary action files. DHS will use this system to collect and maintain records submitted to it by DHS personnel and others. In this notice of proposed rulemaking, DHS now is proposing to exempt Grievances, Appeals, and Disciplinary Action, in part, from certain provisions of the Privacy Act.

The Privacy Act embodies fair information principles in a statutory framework governing the means by which the United States Government collects, maintains, uses, and disseminates personally identifiable information. The Privacy Act applies to information that is maintained in a ''system of records.'' A ''system of records'' is a group of any records under the control of an agency from which information is retrieved by the name of the individual or by some identifying number, symbol, or other identifying particular assigned to the individual. Individuals may request their own records that are maintained in a system of records in the possession or under the control of DHS by complying with DHS Privacy Act regulations, 6 CFR part 5.

The Privacy Act requires each agency to publish in the **Federal Register** a description of the type and character of each system of records that the agency maintains, and the routine uses that are contained in each system in order to make agency recordkeeping practices transparent, to notify individuals regarding the uses to which personally identifiable information is put, and to assist individuals in finding such files within the agency.

The Privacy Act allows Government agencies to exempt certain records from the access and amendment provisions. If an agency claims an exemption, however, it must issue a Notice of Proposed Rulemaking to make clear to the public the reasons why a particular exemption is claimed.

DHS is claiming exemptions from certain requirements of the Privacy Act for Grievances, Appeals, and Disciplinary Action. Some information in Grievances, Appeals, and Disciplinary Action relates to official DHS national security, law enforcement, immigration, intelligence activities, and protective services to the President of the United States or other individuals pursuant to Section 3056 and 3056A of Title 18. These exemptions are needed to protect information relating to DHS activities from disclosure to subjects or others related to these activities. Specifically, the exemptions are required to preclude subjects of these activities from frustrating these processes; to avoid disclosure of activity techniques; to protect the identities and physical safety of confidential informants and law enforcement personnel; to ensure DHS' ability to obtain information from third parties and other sources; to protect the privacy of third parties; to safeguard classified information; and to safeguard records in connection with providing protective services to the President of the United States or other individuals pursuant to Section 3056 and 3056A of Title 18. Disclosure of information to the subject of the inquiry could also permit the subject to avoid detection or apprehension.

The exemptions proposed here are standard law enforcement and national security exemptions exercised by a large number of Federal law enforcement and intelligence agencies. In appropriate circumstances, where compliance would not appear to interfere with or adversely affect the law enforcement purposes of this system and the overall law enforcement process, the applicable exemptions may be waived on a case by case basis.

A notice of system of records for Grievances, Appeals, and Disciplinary Action is also published in this issue of the **Federal Register**.

List of Subjects in 6 CFR Part 5

Freedom of information; Privacy.

For the reasons stated in the preamble, DHS proposes to amend Chapter I of Title 6, Code of Federal Regulations, as follows:

PART 5—DISCLOSURE OF RECORDS AND INFORMATION

1. The authority citation for Part 5 continues to read as follows:

Authority: Public Law 107–296, 116 Stat. 2135, 6 U.S.C. 101 *et seq.*; 5 U.S.C. 301. Subpart A also issued under 5 U.S.C. 552. Subpart B also issued under 5 U.S.C. 552a.

2. In Appendix C to part 5, add a new paragraph 10 to the end of the Appendix to read as follows:

Appendix C to Part 5—DHS Systems of Records Exempt From the Privacy Act

* * * * *

10. The Department of Homeland Security Grievances, Appeals, and Disciplinary Action system of records consists of electronic and paper records and will be used by DHS and its components. Grievances, Appeals, and Disciplinary Action is a repository of information held by DHS in connection with its several and varied missions and functions, including, but not limited to: The enforcement of civil and criminal laws; investigations, inquiries, and proceedings there under; national security and intelligence activities; and protection of the President of the United States or other individuals pursuant to Section 3056 and 3056A of Title 18. Grievances, Appeals, and Disciplinary Action contains information that is collected by, on behalf of, in support of, or in cooperation with DHS and its components and may contain personally identifiable information collected by other Federal, State, local, tribal, foreign, or international government agencies. Pursuant to exemption 5 U.S.C. 552a(j)(2) of the Privacy Act, portions of this system are exempt from 5 U.S.C. 552a(c)(3) and (4); (d); (e)(1), (e)(2), (e)(3), (e)(4)(G), (e)(4)(H), (e)(4)(I), (e)(5) and (e)(8); (f), and (g). Pursuant to 5 U.S.C. 552a(k)(1), (2), (3), and (5), this system is exempt from the following provisions of the Privacy Act, subject to the limitations set forth in those subsections: 5 U.S.C. 552a(c)(3), (d), (e)(1), (e)(4)(G), (e)(4)(H), (e)(4)(I), and (f). Exemptions from these particular subsections are justified, on a case-by-case basis to be determined at the time a request is made, for the following reasons:

(a) From subsection (c)(3) and (4) (Accounting for Disclosures) because release of the accounting of disclosures could alert the subject of an investigation of an actual or potential criminal, civil, or regulatory violation to the existence of the investigation, and reveal investigative interest on the part of DHS as well as the recipient agency. Disclosure of the accounting would therefore present a serious impediment to law enforcement efforts and/or efforts to preserve national security. Disclosure of the accounting would also permit the individual who is the subject of a record to impede the investigation, to tamper with witnesses or evidence, and to avoid detection or apprehension, which would undermine the entire investigative process.

(b) From subsection (d) (Access to Records) because access to the records contained in this system of records could inform the subject of an investigation of an actual or potential criminal, civil, or regulatory violation, to the existence of the investigation, and reveal investigative interest on the part of DHS or another agency. Access to the records could permit the individual who is the subject of a record to impede the investigation, to tamper with witnesses or evidence, and to avoid detection or apprehension. Amendment of the records could interfere with ongoing investigations and law enforcement activities and would impose an impossible administrative burden by requiring investigations to be continuously reinvestigated. In addition, permitting access and amendment to such information could disclose security-sensitive information that could be detrimental to homeland security.

(c) From subsection (e)(1) (Relevancy and Necessity of Information) because in the course of investigations into potential violations of Federal law, the accuracy of information obtained or introduced occasionally may be unclear or the information may not be strictly relevant or necessary to a specific investigation. In the interests of effective law enforcement, it is appropriate to retain all information that may aid in establishing patterns of unlawful activity.

(d) From subsection (e)(2) (Collection of Information from Individuals) because requiring that information be collected from the subject of an investigation would alert the subject to the nature or existence of an investigation, thereby interfering with the related investigation and law enforcement activities.

(e) From subsection (e)(3) (Notice to Subjects) because providing such detailed information would impede law enforcement in that it could compromise investigations by: Revealing the existence of an otherwise confidential investigation and thereby provide an opportunity for the subject of an investigation to conceal evidence, alter patterns of behavior, or take other actions that could thwart investigative efforts; reveal the identity of witnesses in investigations, thereby providing an opportunity for the subjects of the investigations or others to harass, intimidate, or otherwise interfere with the collection of evidence or other information from such witnesses; or reveal the identity of confidential informants, which would negatively affect the informant's usefulness in any ongoing or future investigations and discourage members of the public from cooperating as confidential informants in any future investigations.

(f) From subsections (e)(4)(G), (H), and (I) (Agency Requirements), and (f) (Agency Rules) because portions of this system are exempt from the individual access provisions of subsection (d) for the reasons noted above, and therefore DHS is not required to establish requirements, rules, or procedures with respect to such access. Providing notice to individuals with respect to existence of records pertaining to them in the system of records or otherwise setting up procedures pursuant to which individuals may access and view records pertaining to themselves in the system would undermine investigative efforts and reveal the identities of witnesses, and potential witnesses, and confidential informants.

(g) From subsection (e)(5) (Collection of Information) because in the collection of information for law enforcement purposes it is impossible to determine in advance what information is accurate, relevant, timely, and complete. Compliance with (e)(5) would preclude DHS agents from using their investigative training and exercise of good judgment to both conduct and report on investigations.

(h) From subsection (e)(8) (Notice on Individuals) because compliance would interfere with DHS' ability to obtain, serve, and issue subpoenas, warrants, and other law enforcement mechanisms that may be filed under seal, and could result in disclosure of investigative techniques, procedures, and evidence.

(i) From subsection (g) to the extent that the system is exempt from other specific subsections of the Privacy Act relating to individuals' rights to access and amend their records contained in the system. Therefore DHS is not required to establish rules or procedures pursuant to which individuals may seek a civil remedy for the agency's: Refusal to amend a record; refusal to comply with a request for access to records; failure to maintain accurate, relevant timely and complete records; or failure to otherwise comply with an individual's right to access or amend records.

Dated: October 7, 2008.

Hugo Teufel III,

Chief Privacy Officer, Department of Homeland Security.

[FR Doc. E8–24805 Filed 10–17–08; 8:45 am]

BILLING CODE 4410–10–P

DEPARTMENT OF AGRICULTURE

Agricultural Marketing Service

7 CFR Part 946

[Docket No. AMS–FV–08–0037; FV08–946–2 PR]

Irish Potatoes Grown in Washington; Modification of Late Payment and Interest Charge Regulation

AGENCY: Agricultural Marketing Service, USDA.

ACTION: Proposed rule.

SUMMARY: This rule invites comments on a modification of the late payment and interest charge regulation prescribed under the Washington potato marketing order. The marketing order regulates the handling of Irish potatoes grown in Washington, and is administered locally by the State of Washington Potato Committee (Committee). This rule would revise the date interest is charged on late assessment payments from 30 to 60 days from the billing date shown on the handler's assessment statement received from the Committee. This rule would contribute to the efficient operation of the marketing order by reducing billing for nominal late payment interest charges on handlers who pay within 60 days of the billing date, while continuing those interest charges necessary to encourage payment, thereby ensuring that adequate funds are available to cover the Committee's authorized expenses.

DATES: Comments must be received by November 4, 2008.

ADDRESSES: Interested persons are invited to submit written comments concerning this proposal. Comments must be sent to the Docket Clerk, Marketing Order Administration Branch, Fruit and Vegetable Programs, AMS, USDA, 1400 Independence Avenue, SW., STOP 0237, Washington, DC 20250–0237; *Fax:* (202) 720–8938; or *Internet: http://www.regulations.gov*. All comments should reference the docket number and the date and page number of this issue of the **Federal Register** and will be made available for public inspection in the Office of the Docket Clerk during regular business hours, or can be viewed at: *http://www.regulations.gov*.

FOR FURTHER INFORMATION CONTACT: Teresa Hutchinson or Gary Olson, Northwest Marketing Field Office, Marketing Order Administration Branch, Fruit and Vegetable Programs, AMS, USDA, *Telephone:* (503) 326–2724, *Fax:* (503) 326–7440, or *E-mail: Teresa.Hutchinson@usda.gov* or *GaryD.Olson@usda.gov.*

Small businesses may request information on complying with this regulation by contacting Jay Guerber, Marketing Order Administration Branch, Fruit and Vegetable Programs, AMS, USDA, 1400 Independence Avenue, SW., STOP 0237, Washington, DC 20250–0237; *Telephone:* (202) 720–2491, *Fax:* (202) 720–8938, or *E-mail: Jay.Guerber@usda.gov.*

SUPPLEMENTARY INFORMATION: This proposal is issued under Marketing Order No. 946, as amended (7 CFR part 946), regulating the handling of Irish potatoes grown in Washington, hereinafter referred to as the ''order.'' The order is effective under the Agricultural Marketing Agreement Act of 1937, as amended (7 U.S.C. 601–674), hereinafter referred to as the ''Act.''

The Department of Agriculture (USDA) is issuing this rule in conformance with Executive Order 12866.

This proposal has been reviewed under Executive Order 12988, Civil Justice Reform. This rule is not intended to have retroactive effect. This proposal will not preempt any State or local laws, regulations, or policies, unless they present an irreconcilable conflict with this rule.

The Act provides that administrative proceedings must be exhausted before parties may file suit in court. Under section 608c(15)(A) of the Act, any handler subject to an order may file with USDA a petition stating that the order, any provision of the order, or any obligation imposed in connection with the order is not in accordance with law and request a modification of the order or to be exempted therefrom. A handler is afforded the opportunity for a hearing on the petition. After the hearing, USDA would rule on the petition. The Act provides that the district court of the United States in any district in which the handler is an inhabitant, or has his or her principal place of business, has jurisdiction to review USDA's ruling on the petition, provided an action is filed not later than 20 days after the date of the entry of the ruling.

This proposal invites comments on a modification of the late payment and interest charge regulation currently prescribed under the order. This rule would revise the date interest is charged on late assessment payments from 30 to 60 days from the billing date shown on the handler's assessment statement received from the Committee. This rule would contribute to the efficient operation of the order by reducing the number of nominal billings for late payment interest charges on handlers who pay within 60 days of the billing date, while continuing those interest charges necessary to encourage payment, thereby ensuring that adequate funds are available to cover the Committee's authorized expenses.

The Washington potato marketing order provides authority for the Committee, with the approval of USDA, to formulate an annual budget of expenses and collect assessments from handlers to administer the program. The members of the Committee are producers and handlers of Washington potatoes. They are familiar with the Committee's needs and the costs for goods and services in their local area and are thus in a position to formulate an appropriate budget and assessment rate. The assessment rate and the authority to recommend late payment charges or interest charges on late payment, are formulated and discussed at a public meeting. Thus, all directly affected persons have an opportunity to participate and provide input.

Section 946.41 of the order specifies that if handlers do not pay their assessments within the time prescribed by the Committee, the assessments may be increased by a late payment charge or an interest charge, or both, at rates prescribed by the Committee with approval of USDA.

Section 946.141 of the order's administrative rules and regulations prescribes that the Committee shall impose a monthly interest charge of one percent of the unpaid balance on any handler who fails to pay his or her assessment within 30 days of the billing date. The interest charge regulation has been effective since May 25, 1995 (60 FR 27683). At that time, the Committee expressed difficulty with handlers that were continually late with their assessment payments and recommended the interest charge to be incurred 30 days after the billing date. It was believed that the charges were high enough to encourage timely payment and that this would be an effective means to ensure the Committee had adequate funds to administer the program.

The Committee unanimously recommended this rule during a video conference meeting held on April 16, 2008, followed by unanimous mail vote. The Committee has determined that most handlers pay their assessments within 60 days but there are a few that pay later than 60 days. The interest billing that occurs 30 days after the billing date has proven to be administratively cumbersome as the amounts billed are nominal amounts and many times the handler's payment is received shortly after the bill including interest is mailed.

As an example, the Committee's budget for the current fiscal year (2008–2009) is $38,600 and estimated assessment income is $35,000. Since there are approximately 43 handlers, the average each handler will pay in assessments is approximately $814. Committee records indicate that for the most recent fiscal year, there were 316 invoices billed to handlers. The average amount on an invoice was $110.44, with a high of $626.54 and a low of $0.18. Therefore, the interest amount owed on a payment that is 30 days late, but not

more than 60, would often be less than a dollar, rarely more than five dollars. Most handlers pay their assessments with 60 days. Only a few pay later than 60 days. The Committee believes that handlers that pay later than 60 days would be considered a greater risk for nonpayment than handlers who pay within 60 days.

The Committee recommended retaining § 946.141, but recommended modifying the regulation by providing an additional 30 days for handlers to pay. Committee records show that the great majority of handlers pay assessments within 60 days of the billing date. By waiting until 60 days past the billing date to charge interest on late assessment payments, the Committee would only have to charge interest to the few handlers who do not pay within 60 days. The Committee believes the interest charge applied after 60 days will continue to encourage handlers to pay promptly.

Initial Regulatory Flexibility Analysis

Pursuant to requirements set forth in the Regulatory Flexibility Act (RFA), the Agricultural Marketing Service (AMS) has considered the economic impact of this action on small entities. Accordingly, AMS has prepared this initial regulatory flexibility analysis.

The purpose of the RFA is to fit regulatory actions to the scale of business subject to such actions in order that small businesses will not be unduly or disproportionately burdened. Marketing orders issued pursuant to the Act, and rules issued thereunder, are unique in that they are brought about through group action of essentially small entities acting on their own behalf.

Currently, there are approximately 43 handlers of Washington potatoes who are subject to regulation under the marketing order and approximately 267 potato producers in the regulated area. Small agricultural service firms are defined by the Small Business Administration (SBA) (13 CFR 121.201) as those having annual receipts of less than $6,500,000, and small agricultural producers are defined as those having annual receipts of less than $750,000.

During the 2006–2007 marketing year, 9,932,874 hundredweight of Washington potatoes were inspected under the order and sold into the fresh market by 43 handlers, according to Committee data. The Committee reports that an industry consensus estimate of an average fresh potato f.o.b. price is $8.45 per hundredweight. Multiplying the 2006–2007 fresh shipments of 9,932,874 hundredweight by the average f.o.b. price of $8.45 yields a handler-level fresh market crop value of $83,932,785. Dividing $83,933,785 by 43 handlers gives an average annual sales value per handler estimate of about $1,951,949. The Committee estimates that 41, or about 95 percent of these 43 handlers, had annual receipts of less than $6,500,000.

A comparable computation can be made to estimate annual average revenue per producer. Based on information provided by the National Agricultural Statistics Service, the 2006 season average producer price for Washington potatoes was $6.25 per hundredweight. Multiplying the 2006–2007 fresh shipments of 9,932,874 hundredweight by the average producer price of $6.25 provides a producer-level fresh market crop value of $62,080,463. Dividing $62,080,463 by 267 Washington potato producers yields an average annual fresh market sales value per producer of approximately $232,511.

In view of the foregoing, it can be concluded that the majority of the Washington potato producers and handlers may be classified as small entities.

This proposal would change the date interest is charged on late assessment payments from 30 to 60 days past the billing date. This rule would contribute to the efficient operation of the marketing order by reducing billing for nominal late payment interest charges on handlers who pay within 60 days of the billing date, while continuing those interest charges necessary to encourage payment, thereby ensuring that adequate funds are available to cover the Committee's authorized expenses.

The authority for late payment and interest charges is provided in § 946.41 of the order. Section 946.141 of the order's administrative rules and regulations prescribes the amount of interest charged and when interest charges are imposed.

This proposed change is expected to reduce the cost to administer the order.

Regarding the impact of this rule on affected entities, modification of the late payment and interest charge regulation is expected to benefit handlers. Most handlers pay their assessments within 60 days of the billing date. Only a few handlers pay later than 60 days. Imposing the interest charge on late assessment payments at 60 days instead of 30 days past due will allow the committee to operate more efficiently by only billing after 60 days to handlers whose late payments are considered more serious and a greater risk. The benefits of this proposal are not expected to be disproportionately greater or lesser for small entities than large entities.

The Committee discussed several alternatives to this recommendation, including not changing the date interest charges would be imposed and suspending the entire section. However, the Committee believes that it is important that interest charges be continued to encourage handlers to pay assessments in a timely manner. Further, the additional 30 days should allow adequate time to receive assessment payments by mail and allow the Committee to reduce administrative costs.

This proposed rule would not impose any additional reporting or recordkeeping requirements on either small or large potato handlers. As with all Federal marketing order programs, reports and forms are periodically reviewed to reduce information requirements and duplication by industry and public sector agencies. In addition, USDA has not identified any relevant Federal rules that duplicate, overlap or conflict with this rule.

AMS is committed to complying with the E-Government Act, to promote the use of the Internet and other information technologies to provide increased opportunities for citizen access to Government information and services, and for other purposes.

Further, the Committee's meeting was widely publicized throughout the Washington potato industry and all interested persons were invited to participate in Committee deliberations. Like all Committee meetings, the April 16, 2008, meeting was a public meeting and all entities, both large and small, were able to express views on this issue. Finally, interested persons are invited to submit comments on this proposed rule, including the regulatory and informational impacts of this action on small businesses.

A small business guide on complying with fruit, vegetable, and specialty crop marketing agreements and orders may be viewed at: *http://www.ams.usda.gov/AMSv1.0/ams.fetchTemplateData.do?template=TemplateN&page=MarketingOrdersSmallBusinessGuide*. Any questions about the compliance guide should be sent to Jay Guerber at the previously mentioned address in the **FOR FURTHER INFORMATION CONTACT** section.

A 15-day comment period is provided to allow interested persons to respond to this proposal. Fifteen days is deemed appropriate because this rule relaxes requirements and would improve the operation of the marketing order. All written comments timely received will

be considered before a final determination is made on this matter.

List of Subjects in 7 CFR Part 946

Marketing agreements, Potatoes, Reporting and recordkeeping requirements.

For the reasons set forth in the preamble, 7 CFR part 946 is proposed to be amended as follows:

PART 946—IRISH POTATOES GROWN IN WASHINGTON

1. The authority citation for 7 CFR part 946 continues to read as follows:

Authority: 7 U.S.C. 601–674.

2. Section 946.141 is revised to read as follows:

§ 946.141 Late payment and interest charge.

The Committee shall impose an interest charge on any handler who fails to pay his or her assessment within sixty (60) days of the billing date shown on the handler's assessment statement received from the Committee. The interest charge shall, after 60 days, be one percent of the unpaid assessment balance. In the event the handler fails to pay the delinquent assessment, the one percent interest charge shall be applied monthly thereafter to the unpaid balance, including any accumulated unpaid interest. Any amount paid by a handler as an assessment, including any charges imposed pursuant to this paragraph, shall be credited when the payment is received in the Committee office.

Dated: October 15, 2008.

Lloyd C. Day,

Administrator, Agricultural Marketing Service.

[FR Doc. E8–24918 Filed 10–17–08; 8:45 am]

BILLING CODE 3410–02–P

DEPARTMENT OF AGRICULTURE

Agricultural Marketing Service

7 CFR Part 966

[Docket No. AMS–FV–08–0081; FV08–966–1 PR]

Tomatoes Grown In Florida; Increased Assessment Rate

AGENCY: Agricultural Marketing Service, USDA.

ACTION: Proposed rule.

SUMMARY: This rule would increase the assessment rate established for the Florida Tomato Committee (Committee) for the 2008–09 and subsequent fiscal periods from $0.0325 to $0.0375 per 25-pound carton of tomatoes handled. The Committee locally administers the marketing order which regulates the handling of tomatoes grown in Florida. Assessments upon tomato handlers are used by the Committee to fund reasonable and necessary expenses of the program. The fiscal period begins August 1 and ends July 31. The assessment rate would remain in effect indefinitely unless modified, suspended, or terminated.

DATES: Comments must be received by November 19, 2008.

ADDRESSES: Interested persons are invited to submit written comments concerning this rule. Comments must be sent to the Docket Clerk, Marketing Order Administration Branch, Fruit and Vegetable Programs, AMS, USDA, 1400 Independence Avenue, SW., STOP 0237, Washington, DC 20250–0237; *Fax:* (202) 720–8938; or *Internet: http://www.regulations.gov*. Comments should reference the docket number and the date and page number of this issue of the **Federal Register** and will be available for public inspection in the Office of the Docket Clerk during regular business hours, or can be viewed at: *http://www.regulations.gov*.

FOR FURTHER INFORMATION CONTACT: William G. Pimental, Marketing Specialist, or Christian D. Nissen, Regional Manager, Southeast Marketing Field Office, Marketing Order Administration Branch, Fruit and Vegetable Programs, AMS, USDA; *Telephone:* (863) 324–3375 *Fax:* (863) 325–8793, or *E-mail: William.Pimental@usda.gov* or *Christian.Nissen@usda.gov.*

Small businesses may request information on complying with this regulation by contacting Jay Guerber, Marketing Order Administration Branch, Fruit and Vegetable Programs, AMS, USDA, 1400 Independence Avenue, SW., STOP 0237, Washington, DC 20250–0237; *Telephone:* (202) 720–2491, *Fax:* (202) 720–8938, or *E-mail: Jay.Guerber@usda.gov*.

SUPPLEMENTARY INFORMATION: This rule is issued under Marketing Agreement No. 125 and Order No. 966, both as amended (7 CFR part 966), regulating the handling of tomatoes grown in Florida, hereinafter referred to as the ''order.'' The order is effective under the Agricultural Marketing Agreement Act of 1937, as amended (7 U.S.C. 601–674), hereinafter referred to as the ''Act.''

The Department of Agriculture (USDA) is issuing this rule in conformance with Executive Order 12866.

This rule has been reviewed under Executive Order 12988, Civil Justice Reform. Under the marketing order now in effect, Florida tomato handlers are subject to assessments. Funds to administer the order are derived from such assessments. It is intended that the assessment rate as proposed herein would be applicable to all assessable tomatoes beginning on August 1, 2008, and continue until amended, suspended, or terminated. This rule will not preempt any State or local laws, regulations, or policies, unless they present an irreconcilable conflict with this rule.

The Act provides that administrative proceedings must be exhausted before parties may file suit in court. Under section 608c(15)(A) of the Act, any handler subject to an order may file with USDA a petition stating that the order, any provision of the order, or any obligation imposed in connection with the order is not in accordance with law and request a modification of the order or to be exempted therefrom. Such handler is afforded the opportunity for a hearing on the petition. After the hearing, USDA would rule on the petition. The Act provides that the district court of the United States in any district in which the handler is an inhabitant, or has his or her principal place of business, has jurisdiction to review USDA's ruling on the petition, provided an action is filed not later than 20 days after the date of the entry of the ruling.

This rule would increase the assessment rate established for the Committee for the 2008–09 and subsequent fiscal periods from $0.0325 to $0.0375 per 25-pound carton of tomatoes.

The Florida tomato marketing order provides authority for the Committee, with the approval of USDA, to formulate an annual budget of expenses and collect assessments from handlers to administer the program. The members of the Committee are producers of Florida tomatoes. They are familiar with the Committee's needs and with the costs for goods and services in their local area and are thus in a position to formulate an appropriate budget and assessment rate. The assessment rate is formulated and discussed in a public meeting. Thus, all directly affected persons have an opportunity to participate and provide input.

For the 2007–08 and subsequent fiscal periods, the Committee recommended, and USDA approved, an assessment rate that would continue in effect from fiscal period to fiscal period unless modified, suspended, or terminated by USDA upon recommendation and information submitted by the Committee or other information available to USDA.

The Committee met on August 14, 2008, and unanimously recommended 2008–09 expenditures of $2,438,200 and an assessment rate of $0.0375 per 25-pound carton of tomatoes. In comparison, last year's budgeted expenditures were $2,101,000. The assessment rate of $0.0375 is $0.005 higher than the rate currently in effect. The assessment increase is needed to offset the 2008–09 increase in education and promotion expenses, salaries, and employee retirement. Without the increase in the assessment rate, the Committee would need to utilize an additional $250,000 from the authorized reserve. Therefore, the Committee voted to increase the assessment rate.

The major expenditures recommended by the Committee for the 2008–09 year include $1,200,000 for education and promotion, $505,500 for salaries, $320,000 for research, and $77,000 for employee retirement. Budgeted expenses for these items in 2007–08 were $900,000, $467,000, $320,000, and $71,000, respectively.

The assessment rate recommended by the Committee was derived by dividing anticipated expenses, less anticipated funds from the USDA Market Access Program (MAP), by expected shipments of Florida tomatoes. Tomato shipments for the year are estimated at 50 million 25-pound cartons and should provide $1,875,000 in assessment income. Income derived from handler assessments, along with interest income, MAP funds, and funds from the Committee's authorized reserve, would be adequate to cover budgeted expenses. Funds in the reserve (currently approximately $593,000) would be kept within the maximum permitted by the order of not to exceed one fiscal period's expenses as stated in § 966.44 of the order.

The proposed assessment rate would continue in effect indefinitely unless modified, suspended, or terminated by USDA upon recommendation and information submitted by the Committee or other available information.

Although this assessment rate would be in effect for an indefinite period, the Committee would continue to meet prior to or during each fiscal period to recommend a budget of expenses and consider recommendations for modification of the assessment rate. The dates and times of Committee meetings are available from the Committee or USDA. Committee meetings are open to the public and interested persons may express their views at these meetings. USDA would evaluate Committee recommendations and other available information to determine whether modification of the assessment rate is needed. Further rulemaking would be undertaken as necessary. The Committee's 2008–09 budget and those for subsequent fiscal periods would be reviewed and, as appropriate, approved by USDA.

Initial Regulatory Flexibility Analysis

Pursuant to requirements set forth in the Regulatory Flexibility Act (RFA), the Agricultural Marketing Service (AMS) has considered the economic impact of this rule on small entities. Accordingly, AMS has prepared this initial regulatory flexibility analysis.

The purpose of the RFA is to fit regulatory actions to the scale of business subject to such actions in order that small businesses will not be unduly or disproportionately burdened. Marketing orders issued pursuant to the Act, and the rules issued thereunder, are unique in that they are brought about through group action of essentially small entities acting on their own behalf.

There are approximately 100 producers of tomatoes in the production area and approximately 70 handlers subject to regulation under the marketing order. Small agricultural producers are defined by the Small Business Administration (SBA) as those having annual receipts less than $750,000, and small agricultural service firms are defined as those whose annual receipts are less than $6,500,000 (13 CFR 121.201).

Based on industry and Committee data, the average annual price for fresh Florida tomatoes during the 2007–08 season was approximately $13.71 per 25-pound container, and total fresh shipments for the 2007–08 season were 45,177,457 25-pound cartons of tomatoes. Committee data indicates that approximately 25 percent of the handlers handle 94 percent of the total volume shipped outside the regulated area. Based on the average price, about 75 percent of handlers could be considered small businesses under SBA's definition. In addition, based on production data, grower prices as reported by the National Agricultural Statistics Service, and the total number of Florida tomato growers, the average annual grower revenue is below $750,000. Thus, the majority of handlers and producers of Florida tomatoes may be classified as small entities.

This rule would increase the assessment rate established for the Committee and collected from handlers for the 2008–09 and subsequent fiscal periods from $0.0325 to $0.0375 per 25-pound carton of tomatoes. The Committee unanimously recommended 2008–09 expenditures of $2,438,200 and an assessment rate of $0.0375 per 25-pound carton. The proposed assessment rate of $0.0375 is $0.005 higher than the 2007–08 rate. The quantity of assessable tomatoes for the 2008–09 season is estimated at 50 million 25-pound cartons. Thus, the $0.0375 rate should provide $1,875,000 in assessments. Income derived from handler assessments, along with interest income and funds from the Committee's authorized reserve, and other income, would be adequate to cover budgeted expenses.

The major expenditures recommended by the Committee for the 2008–09 year include $1,200,000 for education and promotion, $505,500 for salaries, $320,000 for research, and $77,000 for employee retirement. Budgeted expenses for these items in 2007–08 were $900,000, $467,000, $320,000, and $71,000, respectively.

The assessment increase is needed to offset the 2008–09 increase in education and promotion expenses, salaries, and employee retirement. Without the increase in the assessment rate, the Committee would need to utilize an additional $250,000 from the authorized reserve. Therefore, the Committee voted to increase the assessment rate.

The Committee reviewed and unanimously recommended 2008–09 expenditures of $2,438,200, which included increases in education and promotion, salaries, and employee retirement. Prior to arriving at this budget, the Committee considered information from various sources, such as the Committee's Executive Subcommittee, Finance Subcommittee, Research Subcommittee, and Education and Promotion Subcommittee. Alternative expenditure levels were discussed by these groups based upon the relative value of various education and promotion projects to the tomato industry. The assessment rate of $0.0375 per 25-pound container of assessable tomatoes was determined by examining the anticipated expenses, expected shipments, MAP funds, and available reserves. The recommended assessment rate would generate $1,875,000 in income. Considering income from assessments, interest, and other sources, total income would be approximately $27,000 below the anticipated expenses, which the Committee determined to be acceptable.

A review of historical information and preliminary information pertaining to the 2008–09 fiscal period indicates that the grower price for the 2008–09 season could range between $7.98 and $12.95 per 25-pound carton of tomatoes. Therefore, the estimated assessment

revenue for the 2008–09 season as a percentage of total grower revenue could range between 0.3 and 0.5 percent.

This action would increase the assessment obligation imposed on handlers. While assessments impose some additional costs on handlers, the costs are minimal and uniform on all handlers. Some of the additional costs may be passed on to producers. However, these costs would be offset by the benefits derived by the operation of the marketing order. In addition, the Committee's meeting was widely publicized throughout the Florida tomato industry and all interested persons were invited to attend the meeting and participate in Committee deliberations on all issues. Like all Committee meetings, the August 14, 2008, meeting was a public meeting and all entities, both large and small, were able to express views on this issue. Finally, interested persons are invited to submit comments on this proposed rule, including the regulatory and informational impacts of this action on small businesses.

This proposed rule would impose no additional reporting or recordkeeping requirements on either small or large Florida tomato handlers. As with all Federal marketing order programs, reports and forms are periodically reviewed to reduce information requirements and duplication by industry and public sector agencies.

AMS is committed to complying with the E-Government Act, to promote the use of the Internet and other information technologies to provide increased opportunities for citizen access to Government information and services, and for other purposes.

USDA has not identified any relevant Federal rules that duplicate, overlap, or conflict with this rule.

A small business guide on complying with fruit, vegetable, and specialty crop marketing agreements and orders may be viewed at: *http://www.ams.usda.gov/AMSv1.0/ams.fetchTemplateData.do?template=TemplateN&page=MarketingOrdersSmallBusinessGuide*. Any questions about the compliance guide should be sent to Jay Guerber at the previously mentioned address in the **FOR FURTHER INFORMATION CONTACT** section.

A 30-day comment period is provided to allow interested persons to respond to this proposed rule. Thirty days is deemed appropriate because: (1) The 2008–09 fiscal period began on August 1, 2008, and the marketing order requires that the rate of assessment for each fiscal period apply to all assessable tomatoes handled during such fiscal period; (2) the Committee needs to have sufficient funds to pay its expenses which are incurred on a continuous basis; and (3) handlers are aware of this action which was unanimously recommended by the Committee at a public meeting and is similar to other assessment rate actions issued in past years.

List of Subjects in 7 CFR Part 966

Marketing agreements, Reporting and recordkeeping requirements, Tomatoes.

For the reasons set forth in the preamble, 7 CFR part 966 is proposed to be amended as follows:

PART 966—TOMATOES GROWN IN FLORIDA

1. The authority citation for 7 CFR part 966 continues to read as follows:

Authority: 7 U.S.C. 601–674.

2. Section 966.234 is revised to read as follows:

§ 966.234 Assessment rate.

On and after August 1, 2008, an assessment rate of $0.0375 per 25-pound carton is established for Florida tomatoes.

Dated: October 15, 2008.

Lloyd C. Day,

Administrator, Agricultural Marketing Service.

[FR Doc. E8–24919 Filed 10–17–08; 8:45 am]

BILLING CODE 3410–02–P

NUCLEAR REGULATORY COMMISSION

10 CFR Part 50

[Docket No. PRM–50–88; NRC–2007–0017]

Thomas E. Magette on Behalf of EnergySolutions, LLC; Notice of Denial of Petition for Rulemaking

AGENCY: Nuclear Regulatory Commission.

ACTION: Petition for rulemaking; Denial.

SUMMARY: The Nuclear Regulatory Commission (NRC) is denying a petition for rulemaking submitted by Mr. Thomas E. Magette on behalf of Energy*Solutions*, LLC. The petitioner requested that the NRC's regulations governing domestic licensing of production and utilization facilities be amended to provide a regulatory framework that would allow funds from licensees' decommissioning trust funds to be used for the cost of disposal of ''major radioactive components'' (MRCs) that have been removed from reactors before the permanent cessation of operations.

DATES: The docket for the petition for rulemaking, PRM–50–88, is closed on October 20, 2008.

ADDRESSES: You can access publicly available documents related to this petition for rulemaking using the following methods:

Federal e-Rulemaking Portal: Further NRC action on the issues raised by this petition will be accessible at the Federal rulemaking portal, *http://www.regulations.gov*, by searching on rulemaking docket ID: NRC–2007–0017. Address questions about NRC dockets to Carol Gallagher 301–415–5905; e-mail *Carol.Gallagher@nrc.gov*. The NRC also tracks all rulemaking actions in the ''NRC Regulatory Agenda: Semiannual Report (NUREG–0936).''

NRC's Public Document Room (PDR): The public may examine, and have copied for a fee, publicly available documents at the NRC's PDR, Public File Area O–1 F21, One White Flint North, 11555 Rockville Pike, Rockville, Maryland.

NRC's Agencywide Document Access and Management System (ADAMS): Publicly available documents created or received at the NRC are available electronically at the NRC's Electronic Reading Room at *http://www.nrc.gov/reading-rm/adams.html*. From this page, the public can gain entry into ADAMS, which provides text and image files of NRC's public documents. If you do not have access to ADAMS or if there are any problems in accessing the documents located in ADAMS, contact the NRC PDR reference staff at 1–800–387–4209 or 301–415–4737, or by e-mail to *PDR.resource@nrc.gov*.

FOR FURTHER INFORMATION CONTACT: Harry S. Tovmassian, Office of Nuclear Reactor Regulation, NRC, Washington, DC 20555–0001, telephone 301–415–3092, e-mail *harry.tovmassian@nrc.gov*, or Steven R. Hom, Office of Nuclear Reactor Regulation, NRC, Washington, DC 20555–0001, telephone 301–415–1537, e-mail *steven.hom@nrc.gov*.

SUPPLEMENTARY INFORMATION:

The Petition

On May 29, 2007, the NRC received a petition for rulemaking filed by Mr. Thomas E. Magette on behalf of Energy*Solutions*, LLC. The petitioner requested that the NRC amend its regulations to provide a regulatory framework that would allow funds from licensees' decommissioning trust funds to be used for the cost of disposal of MRCs that have been removed from reactors before the permanent cessation of operations. On August 21, 2007 [72 FR 46569], the NRC published a notice of receipt of the petition for rulemaking

and requested public comment. The petitioner stated that this rulemaking is needed because current regulations define decommissioning in 10 CFR 50.2 as not beginning until the site or facility ceases operation, and 10 CFR 50.82(a)(8) only allows withdrawals from decommissioning trust funds for decommissioning expenses. The petitioner asserted that he believes that such a regulatory framework is in the public interest.

Background

On February 3, 1994 [59 FR 5216], the NRC published in the **Federal Register** a draft policy statement containing, among other things, criteria the NRC proposed to follow to respond to requests by licensees with permanently shut down plants to withdraw decommissioning trust funds before approval of a decommissioning plan submitted under 10 CFR 50.82. On July 20, 1995 [60 FR 37374], the NRC published proposed amendments to the regulations that address decommissioning and license termination, incorporating the criteria from the draft policy statement. The NRC addressed comments that were received on the draft policy statement and proposed rules in the statement of considerations for the final rule [61 FR 39293; July 29, 1996]. One of the comments (by the Nuclear Energy Institute, joined by two licensees) was that the NRC should develop a policy for operating plants on withdrawing decommissioning funds, and ''should allow licensees to withdraw decommissioning trust funds to dispose of structures and equipment no longer being used for operating plants.'' The NRC responded as follows: ''The NRC has concluded that allowing decommissioning trust fund withdrawals for disposals by nuclear power plants that continue to operate is not warranted. These activities are more appropriately considered operating activities and should be financed in that way.''

On May 30, 2001 [66 FR 29244], the NRC published proposed amendments to 10 CFR 50.75 relating to increased oversight by the NRC of decommissioning trusts before decommissioning. One of the proposed changes to the rule required that trust agreements must contain a provision that disbursements from a trust are restricted to ordinary administrative expenses, decommissioning expenses, or transfer to another decommissioning funding assurance method until final decommissioning has been completed. Because these changes would not meet the definition of decommissioning in 10 CFR 50.2, under this provision disbursements from a trust could not be used before the start of decommissioning to dispose of large components that had been replaced at an operating plant. The amendments to the regulation became final at the end of 2002.

Discussion

The Energy*Solutions* petition raises the following issue: Should the NRC undertake a rulemaking that is inconsistent with current Commission policies and regulations on the use of decommissioning trust funds before decommissioning?

When the NRC articulated its policy against the use of decommissioning trust funds for the disposal of MRCs during operations, it did not suggest that MRCs should not, or could not be disposed of during operations using other sources of funding. In fact, the NRC considered this possibility, and stated that these disposals are considered operating activities and should be financed as such.

The Energy*Solutions* petition claims that a change in the NRC's policy and regulations would yield the following benefits: (1) The radioactive source term associated with the contaminated components at reactor sites will be reduced; (2) Site workers will be exposed to less radiation; (3) Costs to store the MRCs and to provide protection to workers can be avoided; (4) The overall costs to decommission will be reduced (because the disposal of at least some MRCs will have already been completed); and (5) More funds will be available to decommission upon permanent cessation of operations.

While the first four benefits asserted by the petitioner may result from the disposal of MRCs, these benefits do not depend upon the origin of the funds used to pay for such disposal (and the petition makes no such assertion). In other words, the same benefits could be achieved if licensees disposed of MRCs using operating revenues, special public utility commission collections from ratepayers, or any other sources of funds other than decommissioning trust funds. The petition does not contain evidence that a reversal of NRC policy and regulations, designed to protect decommissioning trust funds so that they will be available to complete decommissioning, would ensure that all MRCs will in fact be immediately disposed of offsite by all plants, thus eliminating the petition's stated concerns. On the contrary, a reversal could be expected to increase the likelihood that a shortage of decommissioning funds may occur at the time of license expiration, or if a plant unexpectedly shuts down early and generates no further operating revenues.

With regard to the fifth asserted benefit, the petitioner essentially argues that more funds would be available to decommission the reactor upon permanent shutdown because investment returns on a trust fund will be less than the inflation of disposal costs; thus, licensees should spend funds now. This argument conflicts with the basis of the NRC's regulations at 10 CFR 50.75 that permit licensees to assume a 2 percent real rate of return earnings credit on decommissioning trust fund balances, which about 75 percent of plants use to meet minimum decommissioning funding assurance requirements. Allowing licensees to assume a 2 percent real rate of return presumes that over time, trust fund earnings after taxes will exceed the inflation of decommissioning costs, which include disposal costs, by a net 2 percent. To accept the petition's argument would require the NRC to accept the argument's premise that investment returns would not keep up with inflation. If this were the case, the NRC would need to rescind or at least scale back the regulatory earnings credit (lacking the original basis), for which there is no basis at this time.

The petitioner raised several other observations in support of the proposed rulemaking. First, the petition states that a ''blanket prohibition on the use of decommissioning trust funds to dispose of [MRCs] is unnecessary to achieve the underlying purpose of the rule.'' The NRC has never issued a blanket prohibition against seeking an exemption from the provisions of 10 CFR 50.75 or 50.82. However, the NRC views decommissioning funding assurance policies and rules as of the utmost importance in ensuring that there will be sufficient funds to decommission a reactor upon permanent cessation of operations. Accordingly, the NRC expects that there would have to be extraordinary circumstances before any exemption request to withdraw funds early would be granted, particularly if there is no demonstration that there are no other sources of funds available to licensees to dispose of MRCs while a plant is operating.

Second, the petitioner states that granting the petition would avoid a conflict with the NRC's ''philosophy'' underlying other rules governing materials sites to remove source terms from unused portions of operating materials sites. Thus, the NRC should not ''create economic barriers'' to

prevent reactor licensees from disposing of MRCs during operations. While the petition's assertion that ''experience with non-reactor decommissioning sites indicates that clean-up costs can escalate significantly when unmanaged contamination is left on-site for long periods of time'' may be valid, the petition deals with reactor sites and MRCs that are of a different nature than many materials that may be able to migrate into the ground if ''unmanaged.'' The petition acknowledges that current Commission regulations and policy allow the SAFSTOR option for reactors (*i.e.*, the facility is maintained and monitored to allow decay of radioactivity, after which it is decommissioned), and that ''reactor licensees are not subject to'' the same rules governing materials licensees. Thus, any ''conflict'' with a so-called philosophy that may apply to a different category of licensees because they have characteristics distinguishable from reactor licensees warrants limited consideration here, particularly when licensees are free to use non-decommissioning trust funds to dispose of MRCs.

Third, the petitioner states that the proposed amendment to 10 CFR 50.82 does not depend on the adequacy of the minimum formula amount calculated under 10 CFR 50.75. The petition states that the NRC's Inspector General and the Government Accountability Office have raised questions concerning the sufficiency of formula decommissioning cost estimates and funding assurance based on them. These questions, according to the petition, should not affect consideration of the proposed amendment because the proposal would require site-specific, rather than formula, cost estimates for the staff's analysis of a withdrawal request. However, even site-specific estimates become inherently more unreliable the further they are done from permanent shutdown. (The earliest a licensee must perform any type of site-specific decommissioning cost estimate under current NRC regulations is five years from permanent shutdown.) Therefore, cost estimate reliability issues are not rendered moot simply because the proposal would require an analysis based on a site-specific cost estimate versus a formula cost estimate.

Fourth, the petition states that granting the petition would prevent unnecessary regulatory burdens. The petition blames the current policy restricting the use of decommissioning trust funds for causing some licensees to spend funds to build storage structures to house MRCs, maintain them, and monitor releases. Also, these structures purportedly take up limited space. The petition notes that ''in many cases licensees commingle'' radiological decommissioning funds with other funds, and states that preventing the use of the funds ''solely because they are commingled creates an unnecessary regulatory burden as it does not have a corresponding safety benefit if the licensee has sufficient funds in its decommissioning trust funds to meet the provisions of'' 10 CFR 50.82(a)(8)(i)(B) and (C). As discussed earlier, determining whether a licensee has sufficient funds to meet those provisions of 10 CFR 50.82, which are proposed by the petition to be the criteria to judge whether decommissioning funds should be released, becomes much more speculative the further from permanent shutdown a plant is. Whatever test might be used to gauge whether disbursements from a decommissioning trust should be allowed, the issue would not be before the NRC if licensees who desired to withdraw funds for MRC disposal had sub-accounts or established specific accounting that certain funds were earmarked for such purpose and were not relied upon to meet decommissioning funding assurance regulations. In connection with the 2002 final rule amending 10 CFR 50.75 regarding decommissioning trust provisions (which, among other things, confirmed the limitations on the use of decommissioning trust funds), the Commission stated that commingling of trust funds is not objectionable ''as long as the licensees are able to provide a separate accounting showing the amount of funds earmarked'' for other uses not subsumed under the NRC's definition of decommissioning, [See 67 FR 78339; December 24, 2002]. The notion of licensees establishing sub-accounts ''that clearly delineate the purpose of the sub-account'' was discussed as early as 1996 in an advance notice of proposed rulemaking [See 61 FR 15427, footnote 2; April 8, 1996]. If minimum required amounts are maintained for radiological decommissioning, sub-accounts for other activities are not prohibited by the NRC, [See 61 FR 39285; July 29, 1996]. Thus, licensees have had full notice that sub-accounts for the disposal of MRCs during operations could be established as long as decommissioning funding assurance requirements are met. In view of the foregoing, the NRC believes that licensees have had alternatives to address funding the disposal of MRCs during operations, and that the argument that current policy poses ''unnecessary regulatory burdens'' is not compelling.

Notwithstanding the arguments contained in the petition, the NRC believes that existing policy and rules continue to be sound. However, the NRC takes this opportunity to note that it has been and will continue to entertain very limited exceptions, as appropriate. Under 10 CFR 50.12, a licensee can request an exemption from 10 CFR 50.82(a)(8) to use decommissioning trust funds to dispose of MRCs before decommissioning, which the NRC will review on a case-by-case basis in extraordinary circumstances.

The NRC believes there would be no practical difference between the showings necessary under an exemption request and those showings that would be necessary under the petition's proposed rule. Exemptions are decided on a case-by-case basis. Under the rule proposed by the petition, the NRC would also have to make decisions whether to approve withdrawals on a case-by-case basis. In both situations, the NRC would have to factor in, among other things, site specific costs, individual trust balances and the prospect of future contributions, market and cost fluctuations, years left to operate, and any other considerations that might bear on the likelihood of a licensee being able to make up shortfalls in assured decommissioning funds, such as operational issues that could affect anticipated revenues. Because the NRC does not believe there would be significant processing distinctions between the existing exemption regime and the petition's, there is no processing advantage weighing in favor of the rulemaking proposed by the petition.

Public Comments

The notice of receipt of the petition for rulemaking invited interested persons to submit their comments. Six public comments were filed in response to the petition within the public comment period. Licensees submitted four comments, the Nuclear Energy Institute submitted one comment, and Talisman International, LLC, which employs one or more individuals who represent Energy*Solutions*, submitted one comment. All of the comments were supportive of the petition. On June 20, 2008, a seventh public comment was received from Mr. Barry T. Smitherman, Chairman, Public Utility Commission of Texas, commenting on his own behalf. Although this comment was received after the close of the public comment period, the NRC reviewed the letter and finds that it raises no issues that have not been previously considered by the

Commission and that no further resolution is called for.

1. *Comment:* One commenter stated that the proposed rule change would provide ''reactor licensees the needed flexibility'' to use decommissioning trust funds to dispose of MRCs. Another commenter stated that the needed flexibility would provide a framework ''that would allow the NRC on a case-by-case basis to authorize the use of [decommissioning trust funds] for the disposal of MRCs prior to the cessation of reactor operations * * *.''

NRC Response: The NRC already has a framework in place at 10 CFR 50.12 to permit, on a case-by-case basis, some limited flexibility regarding the use of decommissioning trust funds to dispose of MRCs during operations.

2. *Comment:* A commenter opined that the current rule [10 CFR 50.82] poses an unreasonable burden not accompanied by any benefit. The financial burden to construct and maintain storage facilities to house MRCs until the cessation of operations could be avoided according to a commenter.

NRC Response: There is a significant benefit to restricting the use of decommissioning trust funds for MRC disposals, namely to ensure that there are enough funds to decommission a reactor shut down permanently either at the end of its licensed life or any time before that date for reasons unforeseen today. Furthermore, there are sources of funds other than decommissioning trust funds to dispose of MRCs. Any burdens from constructing and maintaining storage facilities can be avoided at the licensee's option by using operating funds to dispose of MRCs, or for regulated licensees by using assessments properly accounted for from rate regulators who approve the use of ratepayer funds to dispose of MRCs.

3. *Comment:* One commenter stated that granting the petitioner's proposal would facilitate the disposal of MRCs.

NRC Response: Nothing in the NRC's regulations prohibits licensees from disposing of MRC's before the cessation of operations using non-decommissioning funds. These non-decommissioning funds would facilitate the disposal of MRCs similar to the use of decommissioning trust funds, but without creating the additional risk that reduced decommissioning trust funds will be insufficient.

4. *Comment:* One commenter stated that the removal of MRCs before decommissioning is cost-effective, delaying the use of decommissioning funds or delaying disposal could result in higher costs and less funds available at decommissioning.

NRC Response: As discussed before, the NRC's rules are based on an assumption that investment earnings from decommissioning trust funds left intact will surpass the inflation of decommissioning costs in the long run. Licensees may use other funds to dispose of MRCs if they believe current disposal costs warrant and there will be insufficient decommissioning funds available at decommissioning.

5. *Comment:* One commenter stated that one of the reasons that disposing of these components is in the interest of his ''Company, its customers, and the public'' is that the source term for the site would be reduced.

NRC Response: Any reduction in the source term due to the removal of MRC's would not depend upon the origin of the funds used to accomplish the removal. This argument does not support the petition's proposal for NRC to amend its regulations.

6. *Comment:* One commenter stated that licensees take all measures necessary to protect public health and safety and the environment and will continue to do so, notwithstanding leaving MRCs onsite.

NRC Response: This comment was made in response to the petition's assertion that leaving MRCs onsite ''can give rise to adverse environmental impacts if not properly managed.'' The NRC has not found that storing MRCs onsite creates a health and safety issue that can only be resolved by the immediate removal of MRCs. If it does create a health and safety issue, the Commission will address this issue directly, rather than by reversing financial policy that may or may not result in the actual disposal of MRCs.

7. *Comment:* Some commenters cited the burden placed on licensees to develop and submit exemption requests, and on the NRC staff to process them as problematic. They believe that the proposal provides a standardized approach which presumably would be less burdensome.

NRC Response: The NRC would not anticipate any reduction in burden on licensees or the staff under the petitioner's proposal. Any request to withdraw funds, whether under 10 CFR 50.12 or 10 CFR 50.82 as proposed to be amended, would have to be submitted and decided on a case-by-case basis and would not be susceptible to generic processing.

8. *Comment:* A commenter stated that the petition, if granted, would provide an opportunity to obtain rate regulator views.

NRC Response: The requirement that licensees provide copies of withdrawal requests to rate regulators would be of value if these regulators actually provided their views, particularly because they, and not the NRC, are principally responsible for economic matters affecting licensees.

9. *Comment:* A commenter stated that current regulations do not consider that MRCs would need to be replaced during operations and do not address the significant burden on licensees to store MRCs until decommissioning.

NRC Response: The 1996 statement of considerations [61 FR 39293; July 29, 1996], discussing a comment that the NRC ''should allow licensees to withdraw decommissioning trust funds to dispose of structures and equipment no longer being used for operating plants,'' cited by the petition itself, clearly demonstrates that the Commission was aware that some MRCs would need to be replaced during operations. Whether current regulations address the purported ''significant burden on licensees to store MRCs'' is of no bearing, because regulations do not require such storage, and licensees have never asserted that they are financially incapable of disposing of MRCs during operations without withdrawing decommissioning trust funds.

10. *Comment:* One commenter stated that licensees with at least 20 years remaining on their licenses should be able to use decommissioning trust funds for the disposal of MRCs before decommissioning (without specific NRC approval) upon providing notice to the NRC with a copy to the rate regulator and providing an estimate of the costs for the disposal. The commenter asserted that there will be ample time to accumulate funds and early disposal will allow more funds to be available in the future.

NRC Response: This ''comment'' is actually a proposal that goes beyond the proposal made by the petition. The key feature is that no NRC approval would be required. A major necessary assumption underlying the comment is that any plant with at least 20 years left to operate would continue to do so notwithstanding the possibility of a crippling accident or adverse economic conditions, and continue to be able to accumulate funds. This comment is outside the scope of the petition's proposal, and therefore is accorded no further consideration.

Reason for Denial

The NRC concludes that the arguments made by the petitioner and the commenters are not sufficiently

persuasive to support the proposed rulemaking. The NRC's policy on not using decommissioning trust funds for the early disposal of MRCs during operations is prudent and necessary generically to preserve and protect such funds. Other sources of funds can be used to dispose of MRCs during operations. Furthermore, under 10 CFR 50.12, licensees may request an exemption to permit withdrawal of decommissioning trust funds to dispose of MRC's, which will be reviewed on a case-by-case basis in extraordinary circumstances. Therefore, the Commission denies PRM–50–88 filed by Energy*Solutions*.

For the Nuclear Regulatory Commission.

Dated at Rockville, Maryland, this 3rd day of October, 2008.

Bruce S. Mallett,

Acting Executive Director for Operations.

[FR Doc. E8–24897 Filed 10–17–08; 8:45 am]

BILLING CODE 7590–01–P

FEDERAL ELECTION COMMISSION

11 CFR Parts 100, 101, 102, 104, 110, 113, 400, 9001, 9003, 9031, and 9033

[Notice 2008–11]

Increased Contribution and Coordinated Party Expenditure Limits for Candidates Opposing Self-financed Candidates

AGENCY: Federal Election Commission.

ACTION: Notice of proposed rulemaking.

SUMMARY: The Federal Election Commission (''Commission'') requests comments on the proposed deletion of its rules regarding increased contribution limits and coordinated party expenditure limits for Senate and House of Representatives candidates facing self-financed opponents. These rules were promulgated to implement sections 304 and 319 of the Bipartisan Campaign Reform Act of 2002, known as the ''Millionaires' Amendment.'' In *Davis* v. *Federal Election Commission,* the Supreme Court held that sections 319(a) and (b), regarding House of Representatives elections, were unconstitutional. The Court's holding also applies to the contribution and spending limits in section 304 regarding Senate elections. The Commission, therefore, proposes to remove its current rules that implement the Millionaires' Amendment. In addition, the Commission proposes to retain certain other rules that generally are applicable throughout the Federal Election Campaign Act of 1971, as amended (the ''Act'' or ''FECA''). The Commission has made no final decision on the issues presented in this rulemaking. Further information is provided in the supplementary information that follows.

DATES: Comments must be received on or before November 21, 2008.

ADDRESSES: All comments must be in writing, must be addressed to Mr. Robert M. Knop, Assistant General Counsel, and must be submitted in either e-mail, facsimile, or paper copy form. Commenters are strongly encouraged to submit comments by e-mail to ensure timely receipt and consideration. E-mail comments must be sent to *millionairerepeal@fec.gov*. If e-mail comments include an attachment, the attachment must be in either Adobe Acrobat (.pdf) or Microsoft Word (.doc) format. Faxed comments must be sent to (202) 219–3923, with paper copy follow-up. Paper comments and paper copy follow-up of faxed comments must be sent to the Federal Election Commission, 999 E Street, NW., Washington, DC 20463. All comments must include the full name and postal service address of the commenter or they will not be considered. The Commission will post comments on its Web site after the comment period ends.

FOR FURTHER INFORMATION CONTACT: Mr. Robert M. Knop, Assistant General Counsel, or Mr. Neven F. Stipanovic, Attorney, 999 E Street, NW., Washington, DC 20463, (202) 694–1650 or (800) 424–9530.

SUPPLEMENTARY INFORMATION: The Commission seeks to revise its current regulations to reflect the Supreme Court's decision in *Davis* v. *Federal Election Commission,* 554 U.S.___, 128 S. Ct. 2759 (2008) that invalidated the Millionaires' Amendment. The Commission proposes to delete its current rules at 11 CFR 100.19(g), 104.19, 110.5(b)(2), and Part 400. It proposes to retain and revise its current rules at 11 CFR 100.33, 100.153, 101.1, 102.2(a)(1)(viii), 113.1(g)(6)(ii), 9001.1, 9003.1(b)(8), 9031.1, and 9033.1(b)(10). It proposes to retain unchanged its current rules at 11 CFR 110.1(b)(3)(ii)(C), 116.11, 116.12, and 9035.2(c).

I. Background

The Millionaires' Amendment [1] of the Bipartisan Campaign Reform Act of 2002, Public Law 107–155, (March 27, 2002) (''BCRA''), increased certain contribution limits and coordinated party expenditure limits for Senate and House of Representatives candidates facing opponents who spent significant amounts of personal funds. When a self-financed opponent spent personal funds above a certain threshold amount, the Millionaires' Amendment permitted a candidate to accept individual contributions under increased contribution limits. 2 U.S.C. 441a(i) and 441a–1(a). When certain other threshold amounts were reached, the Millionaires' Amendment also allowed national and state political party committees to make unlimited coordinated party expenditures on behalf of the candidate in the general election. *Id.*

On December 19, 2002, the Commission approved interim final rules to implement the Millionaires' Amendment. *See Interim Final Rules on Increased Contribution and Coordinated Party Expenditure Limits for Candidates Opposing Self-Financed Candidates,* 68 FR 3970 (Jan. 27, 2003) (''Interim Final Rules''). The Commission sought public comments on the Interim Final Rules, as well as on specific issues discussed in the Explanation and Justification. No comments were received. These Interim Final Rules were in effect during the 2004 and 2006 election cycles, and the beginning of the 2008 election cycle.

On June 26, 2008, the Supreme Court invalidated the Millionaires' Amendment. In *Davis*, the Supreme Court reviewed a challenge by a self-financed candidate who triggered the Millionaires' Amendment in the 2004 and 2006 elections for the House of Representatives. The Supreme Court held that the House of Representatives provision of the Millionaires' Amendment was unconstitutional because it violated the plaintiff's First Amendment rights. 128 S.Ct. at 2775. The Supreme Court invalidated the entire BCRA section 319 relating to House elections, including the increased contribution limits in 319(a) and its companion disclosure requirements in 319(b). The Court reasoned that the Millionaires' Amendment imposed a substantial burden on the plaintiff's exercise of his First Amendment right to use personal funds for campaign speech, and that the burden was not justified by any governmental interest in eliminating corruption or the perception of corruption. 128 S.Ct. at 2772–73.

On July 25, 2008, the Commission issued a Public Statement that, in light of the *Davis* decision, it would no longer enforce the Millionaires' Amendment. *See* Press Release, Public Statement on the Supreme Court's Decision in *Davis* v. *FEC,* July 25, 2008, *available at*

[1] Section 304 of BCRA added a new paragraph (i) to 2 U.S.C. 441a, which addressed Senate elections. Section 319 of BCRA added a new section 441a–1 to the Act, which addressed elections for the House Representatives. The Senate provisions also added new notification and reporting requirements in 2 U.S.C. 434.

http://www.fec.gov/press/press2008/220080725millionaire.shtml. As of June 26, 2008, the increased contribution limits and reporting requirements were no longer in effect, and political party committees were no longer permitted to make increased coordinated party expenditures on behalf of self-financed candidates. *Id.*

II. Proposed Removal of Current 11 CFR Part 400—Increased Limits for Candidates Opposing Self-Financed Candidates

The Commission proposes to delete current 11 CFR Part 400 because the statutory foundation for Part 400 has been invalidated by the Supreme Court's decision in *Davis*. The Commission's rules at 11 CFR Part 400 implement the Millionaires' Amendment. *See Interim Final Rules* at 3975. The rules at Part 400: (1) Provide the notification and reporting requirements for Senate and House of Representatives candidates (subpart B); (2) explain when the increased contribution limits apply (subpart C); (3) explain how to calculate the increased contribution limits (subpart D); and (4) explain how candidates' authorized committees must dispose of excess contributions. In *Davis,* the Supreme Court decided that increased contribution limits and disclosure requirements for House of Representatives candidates in BCRA sections 319(a) and (b) were unconstitutional. Thus, the Commission's rules at 11 CFR Part 400 that implement BCRA sections 319(a) and (b) are no longer valid.

The Supreme Court in *Davis* struck down only BCRA sections 319(a) and (b) governing House of Representatives elections. The Commission, however, believes that the Supreme Court's analysis in *Davis* also precludes enforcement of the Commission's rules implementing BCRA sections 304(a) and (b), which provide increased contribution limits and disclosure requirements for Senate elections. In *Davis,* the Court concluded that increased contribution limits for a House of Representatives candidate facing a self-financed candidate impermissibly burdened the First Amendment right of the self-financed candidates to spend their own money for campaign speech. 128 S.Ct. at 2771. There is no basis to conclude that the constitutional implications would be different for similarly situated candidates in Senate elections, governed by BCRA sections 304(a) and (b), than in the respective House of Representatives elections, governed by BCRA sections 319(a) and (b).

The Commission's rules at Part 400 implement the Millionaires' Amendment provisions for both House and Senate elections. The Commission, therefore, proposes to delete 11 CFR Part 400 in its entirety.

III. Proposed Amendments to Other Provisions

A. Part 100—Definitions

1. Proposed Removal of Current 11 CFR 100.19(g)—File, Filed, or Filing

The Commission proposes to delete current 11 CFR 100.19(g) because the statutory foundation for this provision has been invalidated by the Supreme Court's decision in *Davis*. Section 100.19 defines ''file, filed, or filing'' and specifies when a document is considered timely filed. Paragraph (g) states that a candidate's notification of expenditures from personal funds under 11 CFR 400.21 and 400.22 are considered timely filed if sent by facsimile or electronic mail to all appropriate parties within 24 hours of the time the thresholds set forth in 11 CFR 400.21 and 400.22 are exceeded, thereby triggering the reporting requirement.

As explained above, the Commission proposes to delete current 11 CFR Part 400 in its entirety because the Supreme Court invalidated the Millionaires' Amendment. The Commission proposes to delete paragraph (g) from section 100.19 because the candidate's notifications under 11 CFR 400.21 and 400.22 would no longer be required.

2. Proposed Revision of 11 CFR 100.33—Definition of ''Personal Funds''

The Commission proposes to revise the definition of ''personal funds'' in 11 CFR 100.33 by deleting the cross-reference to current section 400.2, which the Commission intends to remove through this rulemaking. The Commission proposes to retain the remainder of section 100.33 because the definition of ''personal funds'' in section 100.33 applies generally to other Title 2 rules that use the term ''personal funds.'' *See Interim Final Rules,* 68 FR at 3972. The Commission also notes that the definition of ''personal funds'' at 11 CFR 9003.2(c)(3), which applies to Title 26 of the United States Code, would remain unchanged.

B. Proposed Revision of 11 CFR 101.1—Candidate Designations

The Commission proposes to delete the sentence in paragraph (a) of current 11 CFR 101.1 that requires Senate and House of Representatives candidates to state, on their Statements of Candidacy on FEC Form 2 (or, if the candidate is not required to file electronically, on his or her letter containing the same information), the amount by which the candidate intends to exceed the threshold amount as defined in 11 CFR 400.9. The reporting requirements of that sentence would no longer be necessary because, as explained above, the Commission proposes to delete 11 CFR Part 400 through this rulemaking.

C. Proposed 11 CFR 102.2—Statement of Organization: Forms and Committee Identification Number

The Commission proposes to retain and revise current 11 CFR 102.2(a)(1)(viii), which requires principal campaign committees to provide an electronic mail address and a facsimile number on FEC Form 1. Paragraph (viii) was promulgated by the Interim Final Rules to facilitate the notification of expenditures from personal funds under Part 400. *See Interim Final Rules,* 68 FR at 3972. Although the notifications under Part 400 would no longer be required, the electronic mail address provided by committees facilitates the exchange of information between committees and the Commission for other purposes under FECA. Continuing to require committees' electronic mail address, therefore, would continue to benefit the committees as well as the Commission. The Commission, however, proposes to delete the requirement that committees provide their facsimile number because it does not routinely communicate with committees via facsimile machine.

Consistent with its delegated authority to require political committees to provide an ''address'' when filing a statement of organization under 2 U.S.C. 433(b)(1), the Commission proposes to retain the requirement that committees report their electronic mail address on FEC Form 1.

D. Proposed Removal of Current 11 CFR 104.19—Special Reporting Requirements for Principal Campaign Committees of Candidates for Election to the United States Senate or United States House of Representatives

The Commission proposes the remove and reserve current 11 CFR 104.19 because the statutory foundation of this section was invalidated by the Supreme Court's decision in *Davis*. Current section 104.19 requires principal campaign committees of Senate and House of Representatives candidates to report information necessary to calculate their ''gross receipts advantage,'' which is defined at 2 U.S.C. 441a(i)(E) (Senate) and 441a–1(a)(2)(B) (House of Representatives). This reporting requirement was promulgated

to ensure the candidates in the same House or Senate election have sufficient and timely information to calculate the ''opposition personal funds amount'' under 11 CFR Part 400.10. *See Interim Final Rules,* 68 FR at 3972. Because the Commission intends to delete Part 400 in response to the Supreme Court's decision in *Davis,* the reporting requirements under section 104.19 would no longer be necessary.

E. Proposed Deletion of 110.5(b)(2)—Biennial Contribution Limitations

The Commission proposes to delete current paragraph (b)(2) of section 110.5 because the statutory foundation for this provision has been invalidated by the Supreme Court's decision in *Davis*. Paragraph (b)(2) states the circumstances under which the individual biennial limits on contributions do not apply to contributions made pursuant to 11 CFR Part 400. As explained above, the Commission intends to remove 11 CFR Part 400 because the *Davis* decision invalidated the Millionaires' Amendment. Accordingly, the exception to individual contribution limits under section 110.5(b)(2) is no longer valid. The Commission, therefore, proposes to delete 11 CFR 110.5(b)(2).

F. Proposed Retention of 11 CFR 116.11 and 116.12—Repayment of Candidate Loans

The Commission proposes to retain sections 11 CFR 116.11 and 116.12 of the regulations concerning the repayment of candidates' personal loans. The Commission seeks comment on this proposal in light of the Supreme Court's decision in *Davis*.

BCRA added a new provision prohibiting candidates and their authorized committees from using contributions made after the election to repay loans from the candidates to their authorized committees to the extent the contributions total over $250,000. *See* 2 U.S.C. 441a(j). These loans are referred to as ''personal loans.'' The Commission's current rules at 11 CFR 116.11 and 116.12 implement 2 U.S.C. 441a(j). Section 116.11 prohibits an authorized committee from using contributions made after an election to repay any personal loan by a candidate that exceeds $250,000. Section 116.12 addresses the repayment of candidate's personal loans that, in the aggregate, are equal to or less than $250,000.

The Commission believes that the *Davis* decision did not invalidate the personal loan provision in BCRA and, thus, it proposes to retain the rules that implement that provision. The Commission does not have authority, on its own, to declare a duly enacted law to be unconstitutional.

The Court in *Davis* did not address the validity of the personal loan provision, and the plaintiff did not challenge that provision. Although that provision is in the same statutory subsection of BCRA section 304(a) as other provisions that the Supreme Court in *Davis* held to be unconstitutional, the personal loan provision is placed in a separate subsection within 2 U.S.C. 441a. This statutory provision has a wider application than other provisions of the Millionaires' Amendment. It applies equally to all candidates and regardless of whether the Millionaires' Amendment provisions also apply. Most notably, while other provisions of the Millionaires' Amendment apply only to Senate and House of Representatives candidates, the loan repayment provision applies to candidates for all Federal offices, including presidential candidates. Because this statutory provision has wider application than the Millionaires' Amendment, the Commission added new sections 11 CFR 116.11 and 116.12 rather than include these rules in 11 CFR Part 400 with the Millionaires' Amendment regulations. *See Interim Final Rules* at 3973.

The Commission's proposal to retain sections 116.11 and 116.12 is consistent with the approach it took in a recent advisory opinion, which was requested after *Davis* invalidated the Millionaires' Amendment. *See* Advisory Opinion 2008–09 (Lautenberg). Senator Lautenberg loaned money to his principal campaign committee in connection with his primary election. The Senator asked the Commission whether the personal loan provision applied to his personal loan case in light of the *Davis* decision. The Commission concluded that it did apply because the *Davis* decision did not address the constitutionality of the personal loan provision. The Commission explained that, unlike the BCRA provisions found to be unconstitutional in *Davis,* the personal loan provision applies equally to all candidates, regardless of whether they or their opponents have triggered the increased campaign contribution limits.

The Commission also concluded in Advisory Opinion 2008–09 that the personal loan provision was severable from the Millionaires' Amendment. As the Commission explained there, BCRA section 401 provides that the invalidation of one provision of BCRA will not affect the validity of any other provisions of BCRA nor the application of such provisions to other persons and circumstances. 2 U.S.C. 454. It is a well-settled principle of statutory construction that ''[u]nless it is evident that the legislature would not have enacted those provisions which are within its power, independently of that which is not, the invalid part may be dropped if what is left is fully operative as a law.'' *Buckley* v. *Valeo,* 424 U.S. 1, 108 (1976) quoting *Champlin Refining Co.* v. *Corporation Commission,* 286 U.S. 210, 234 (1932)). In *Buckley,* the Supreme Court struck down certain provisions of FECA's section 202, but expressly upheld other provisions within the same subsection of the statute.

In Advisory Opinion 2008–09, the Commission found that it was not at all ''evident'' from the text, function, or legislative history of the Millionaires' Amendment that Congress intended the personal loan provision to be inextricably tied to the increased contribution limits of BCRA 304(a). Section 304(a) was codified in two separate provisions of 2 U.S.C. 441a, one providing for the increased contribution limits and the other limiting repayment of personal loans. Functionally, the personal loan provision can operate effectively without the provisions invalidated by *Davis*. Because the loan repayment provision's operation does not depend upon the invalidated increased contribution limits or reporting provisions, its validity is not affected by their invalidation. Moreover, legislative history shows that Congress in several instances addressed the loan repayment provision separately from the unconstitutional provisions regarding increased contribution limits. *See, e.g.*, 147 Cong. Rec. S2450–51 (daily ed. Mar. 19, 2001) (statement of Sen. Domenici); 147 Cong. Rec. S2461–62 (daily ed. Mar. 19, 2001) (statement of Sen. Domenici).

The Commission seeks comment on its proposal to retain the current rules at 11 CFR 116.11 and 116.12 restricting the repayment of personal loans.

G. Proposed Retention of 11 CFR 110.1(b)(3)(ii)(C)—Net Debts Outstanding

The Commission proposes to retain current 11 CFR 110.1(b)(3), which restricts the ability of candidates and their authorized committees to accept contributions after the election. Together with sections 116.11 and 116.12, current 11 CFR 110.1(b)(3) implements 2 U.S.C. 441a(j).

Candidates and their authorized committees cannot accept contributions after the election is over unless the candidate still has net debts outstanding from that election. 11 CFR 110.1(b)(1)(i). This rule was promulgated long before

BCRA added the loan repayment restriction in 441a(j). After the election is over, candidates and their authorized committees may accept contributions up to the amount of their ''net debts outstanding,'' as defined in current 11 CFR 110.1(b)(3)(ii). To conform with the fundraising restrictions in 11 CFR 116.11, the Commission added paragraph (C) to section 110.1(b)(3)(ii), which excludes the amount of personal loans that exceed $250,000 from the definition of ''net debt outstanding.'' *See Interim Final Rules*, 68 FR at 3973. The Commission proposes to retain the current rule at 11 CFR 110.1(b)(3)(ii)(C) for the same reasons it intends to retain the current rules 11 CFR 116.11 and 116.12, as explained above.

H. Proposed Retention of 11 CFR 9035.2(c)—Expenditure Limitations

The Commission proposes to retain the cross-reference in current 11 CFR 9035.2(c) to the definition of ''personal funds'' in 11 CFR 9003.2. Section 9035.2 provides limitations on expenditures from personal or family funds when a candidate has accepted matching funds in a presidential primary election. In promulgating 11 CFR 9035.2(c), the Commission explained that it cross-referenced that section to the definition of ''personal funds'' in 11 CFR 9003.2 because it was more appropriate in the context of Title 26 regulations than the Commission's definition of ''personal funds'' in 11 CFR 100.33, which applies only to FECA. *See Interim Final Rules,* 68 FR at 3986–87. For the same reason, the Commission continues to believe that the cross-reference in 11 CFR 9035.2(c) to 11 CFR 9003.2 is appropriate and, therefore, it should be retained.

IV. Technical and Conforming Amendments to Other Regulations

A. 11 CFR 100.153—Routine Living Expenses; 11 CFR 113.1(g)(6)(ii)—Definition of Personal Use

The Commission proposes to amend 11 CFR 100.153 and 113.1(g)(6)(ii) by revising the cross-reference to the definition of ''personal funds'' in 11 CFR 110.10(b) to current 11 CFR 100.33. The Commission deleted 11 CFR 110.10(b) in the Interim Final Rules. The proposed change would reflect the Commission's prior removal of the ''personal funds'' definition from section 110.10(b) to section 100.33.

B. 11 CFR 110.5(b)(2)—Biennial Contribution Limitations

The Commission proposes to amend 11 CFR 110.5 paragraphs (b), (d), and (e), by revising the spelling of the word ''bi-annual'' to ''biennial.'' This proposed change would make the spelling consistent with the title of section 110.5, which uses the term biennial.

C. 11 CFR 9001.1—Scope; 11 CFR 9003.1—Candidate and Committee Agreement; 11 CFR 9031.1—Scope; 11 CFR 9033.1—Candidate and Committee Agreement

The Commission proposes to make technical amendments to these sections that would update the reference to its other regulations to reflect the proposed elimination of Part 400.

V. Request for Comments

The Commission invites comments from the public concerning any of the proposals outlined above. The Commission also invites comments from the public regarding any additional changes that should be made to 11 CFR 100.33, 101.1, 102.2(a)(1)(viii), 110.1(b)(3)(ii)(C), 116.11, 116.12, 9035.2(c), or any other section of the regulations to conform with the holdings and points of law articulated in the Supreme Court's decision in Davis.

Certification of No Effect Pursuant to 5 U.S.C. 605(b) (Regulatory Flexibility Act)

The Commission certifies that the attached proposed rule, if adopted, would not have a significant economic impact on a substantial number of small entities. The basis for this certification is that few, if any, small entities would be affected by this proposed rulemaking, which applies only to Federal candidates and their campaign committees, and political committees of political parties. Such committees are not ''small entities'' under 5 U.S.C. 601. Candidate and party committees are not independently owned and operated because they are not financed and controlled by a small identifiable group of individuals; rather, they rely on contributions from a variety of persons to fund the committee's activities. The Democratic and Republican parties also have a major controlling influence within the political arena and are dominant in their field. However, to the extent that any party committees representing major or minor political parties or any other political committees might be considered ''small entities,'' the number that would be affected by this rule is not substantial.

The proposed rule also would not add new substantive provisions to the current regulations, but rather it would remove or retain existing regulations. Therefore, the attached proposed rule would not have a significant impact on a substantial number of small entities.

List of Subjects

11 CFR Part 100

Elections.

11 CFR Part 101

Political candidates, Reporting and recordkeeping requirements.

11 CFR Part 102

Political committees and parties, Reporting and recordkeeping requirements.

11 CFR Part 104

Campaign funds, Political committees and parties, Reporting and recordkeeping requirements.

11 CFR Part 110

Campaign funds, Political committees and parties.

11 CFR Part 113

Campaign funds.

11 CFR Part 116

Administrative practice and procedure, Business and industry, Credit, Elections, Political candidates, Political committees and parties.

11 CFR Part 400

Campaign funds, Elections, Political candidates, Political committees and parties, Reporting and recordkeeping requirements.

11 CFR Part 9001

Campaign funds.

11 CFR Part 9003

Campaign funds, Reporting and recordkeeping requirements.

11 CFR Part 9031

Campaign funds.

11 CFR Part 9033

Campaign funds, Reporting and recordkeeping requirements.

11 CFR Part 9035

Campaign funds, Reporting and recordkeeping requirements.

For the reasons set out in the preamble, the Commission proposes to amend Subchapters A, C, E, and F of Chapter I of Title 11 of the *Code of Federal Regulations* as follows:

PART 100—SCOPE AND DEFINITIONS (2 U.S.C. 431)

1. The authority citation for part 100 continues to read as follows:

Authority: 2 U.S.C. 431, 434, 438(a)(8), and 439a(c).

§ 100.19 [Amended]

2. In section 100.19, is amended by removing the reference to ''(g)'' and adding in its place ''(f)'' in paragraph (b) introductory text and (b)(2) and by removing paragraph (g).

3. Section 100.33 is revised to read as follows:

§ 100.33 Personal funds.

Personal funds of a candidate means the sum of all of the following:

(a) *Assets.* Amounts derived from any asset that, under applicable State law, at the time the individual became a candidate, the candidate had legal right of access to or control over, and with respect to which the candidate had—

(1) Legal and rightful title; or

(2) An equitable interest;

(b) *Income.* Income received during the current election cycle, of the candidate, including:

(1) A salary and other earned income that the candidate earns from bona fide employment;

(2) Income from the candidate's stocks or other investments including interest, dividends, or proceeds from the sale or liquidation of such stocks or investments;

(3) Bequests to the candidate;

(4) Income from trusts established before the beginning of the election cycle;

(5) Income from trusts established by bequest after the beginning of the election cycle of which the candidate is the beneficiary;

(6) Gifts of a personal nature that had been customarily received by the candidate prior to the beginning of the election cycle; and

(7) Proceeds from lotteries and similar legal games of chance; and

(c) *Jointly owned assets.* Amounts derived from a portion of assets that are owned jointly by the candidate and the candidate's spouse as follows:

(1) The portion of assets that is equal to the candidate's share of the asset under the instrument of conveyance or ownership; provided, however,

(2) If no specific share is indicated by an instrument of conveyance or ownership, the value of one-half of the property.

§ 100.53 [Amended]

5. Section 100.153 is amended by removing the reference to ''11 CFR 110.10(b)'' and adding in its place ''11 CFR 100.33''.

PART 101—CANDIDATE STATUS AND DESIGNATIONS (2 U.S.C. 432(e))

6. The authority citation for part 101 continues to read as follows:

Authority: 2 U.S.C. 432(e), 434(a)(11), 438(a)(f).

7. Section 101.1(a) is revised to read as follows:

§ 101.1 Candidate designations (2 U.S.C. 432(e)(1)).

(a) *Principal Campaign Committee.* Within 15 days after becoming a candidate under 11 CFR 100.3, each candidate, other than a nominee for the office of Vice President, shall designate in writing, a principal campaign committee in accordance with 11 CFR 102.12. A candidate shall designate his or her principal campaign committee by filing a Statement of Candidacy on FEC Form 2, or, if the candidate is not required to file electronically under 11 CFR 104.18, by filing a letter containing the same information (that is, the individual's name and address, party affiliation, and office sought, the District and State in which Federal office is sought, and the name and address of his or her principal campaign committee at the place of filing specified at 11 CFR part 105). Each principal campaign committee shall register, designate a depository, and report in accordance with 11 CFR parts 102, 103, and 104.

* * * * *

PART 102—REGISTRATION, ORGANIZATION, AND RECORDKEEPING BY POLITICAL COMMITTEES (2 U.S.C. 433)

8. The authority citation for part 102 continues to read as follows:

Authority: 2 U.S.C. 432, 433, 434(a)(11), 438(a)(8), 441d.

9. In § 102.2, paragraph (a)(1)(viii) is revised to read as follows:

§ 102.2 Statement of organization: Forms and committee identification number (2 U.S.C. 433(b), (c)).

(a) * * *

(1) * * *

(viii) If the committee is a principal campaign committee of a candidate for the Senate or the House of Representatives, the principal campaign committee's electronic mail address.

* * * * *

PART 104—REPORTS BY POLITICAL COMMITTEES AND OTHER PERSONS (2 U.S.C. 434)

10. The authority citation for part 104 continues to read as follows:

Authority: 2 U.S.C. 431(1), 431(8), 431(9), 432(i), 434, 438(a)(8) and (b), 439a, 441a, and 36 U.S.C. 510.

§ 104.19 [Removed and Reserved]

11. Section 104.19 is removed and reserved.

PART 110—CONTRIBUTION AND EXPENDITURE LIMITATIONS AND PROHIBITIONS

12. The authority citation for part 110 continues to read as follows:

Authority: 2 U.S.C. 431(8), 431(9), 432(c)(2), 437d, 438(a)(8), 441a, 441b, 441d, 441e, 441f, 441g, 441h, and 36 U.S.C. 510.

13. In § 110.5, paragraphs (b)(1), (d), and (e) are revised, and paragraph (b)(2) is removed and reserved to read as follows:

§ 110.5 Aggregate biennial contribution limitation for individuals (2 U.S.C. 441a(a)(3)).

* * * * *

(b) *Biennial limitations.* (1) In the two-year period beginning on January 1 of an odd-numbered year and ending on December 31 of the next even-numbered year, no individual shall make contributions aggregating more than $95,000, including no more than:

(i) $37,500 in the case of contributions to candidates and the authorized committees of candidates; and

(ii) $57,500 in the case of any other contributions, of which not more than $37,500 may be attributable to contributions to political committees that are not political committees of any national political parties.

* * * * *

(d) *Independent expenditures.* The biennial limitation on contributions in this section applies to contributions made to persons, including political committees, making independent expenditures under 11 CFR part 109.

(e) *Contributions to delegates and delegate committees.* The biennial limitation on contributions in this section applies to contributions to delegate and delegate committees under 11 CFR 110.14.

PART 113—USE OF CAMPAIGN ACCOUNTS FOR NON-CAMPAIGN PURPOSES

14. The authority citation for part 113 continues to read as follows:

Authority: 2 U.S.C. 432(h), 438(a)(8), 439a, 441a.

§ 113.1 [Amended]

15. Section 113.1(g)(6)(ii) is amended by removing the reference to ''11 CFR 110.10(b)'' and adding in its place ''11 CFR 100.33''.

PART 400—[REMOVED]

16. Under the authority of 2 U.S.C. 437d(a)(8), part 400 is removed.

PART 9001—SCOPE

17. The authority citation for part 9001 continues to read as follows:

Authority: 26 U.S.C. 9009(b).

§ 9001.1 [Amended]

18. Section 9001.1 is amended by removing the number ''400'' and adding in its place the number ''300'' in both instances in which it appears.

PART 9003—ELIGIBILITY FOR PAYMENTS

19. The authority citation for part 9003 continues to read as follows:

Authority: 26 U.S.C. 9003 and 9009(b).

§ 9003.1 [Amended]

20. In section 9003.1, paragraph (b)(8) is amended by removing the number ''400'' and adding in its place the number ''300''.

PART 9031—SCOPE

21. The authority citation for part 9031 continues to read as follows:

Authority: 26 U.S.C. 9031 and 9039(b).

§ 9031.1 [Amended]

22. Section 9031.1 is amended by removing the number ''400'' and adding in its place the number ''300'' in both instances in which it appears.

PART 9033—ELIGIBILITY FOR PAYMENTS

23. The authority citation for part 9033 continues to read as follows:

Authority: 26 U.S.C. 9003(e), 9033 and 9039(b).

§ 9033.1 [Amended]

24. In section 9033.1, paragraph (b)(10) is amended by removing the number ''400'' and adding in its place the number ''300''.

Dated: October 8, 2008.

Donald F. McGahn, II,

Chairman, Federal Election Commission.

[FR Doc. E8–24505 Filed 10–17–08; 8:45 am]

BILLING CODE 6715–01–P

DEPARTMENT OF ENERGY

Federal Energy Regulatory Commission

18 CFR Part 40

[Docket No. RM06–22–000]

Mandatory Reliability Standards for Critical Infrastructure Protection; Notice of Extension of Time

Issued October 10, 2008.

AGENCY: Federal Energy Regulatory Commission.

ACTION: Order on Proposed Clarification: Extension of comment date.

SUMMARY: On September 18, 2008, the Commission issued an order proposing to clarify that the facilities within a nuclear generation plant in the United States that are not regulated by the U.S. Nuclear Regulatory Commission are subject to compliance with the eight mandatory ''CIP'' Reliability Standards approved in Commission Order No. 706. The date for filing comments on the Commission's proposal is being extended at the request of the Edison Electric Institute and the Nuclear Energy Institute.

DATES: Comments are due November 3, 2008.

ADDRESSES: You may submit comments, identified by docket number by any of the following methods:

- *Agency Web Site: http://ferc.gov.* Documents created electronically using word processing software should be filed in native applications or print-to-PDF format and not in a scanned format.
- *Mail/Hand Delivery:* Commenters unable to file comments electronically must mail or hand-deliver an original and 14 copies of their comments to: Federal Energy Regulatory Commission, Secretary of the Commission, 888 First Street, NE., Washington, DC 20426.

FOR FURTHER INFORMATION CONTACT: Jonathan First (Legal Information), Office of General Counsel, 888 First Street, NE., Washington, DC 20426, (202) 502–8529; Regis Binder (Technical Information), Office of Electric Reliability, 888 First Street, NE., Washington, DC 20426, (202) 502–6460.

SUPPLEMENTARY INFORMATION: On October 10, 2008, the Edison Electric Institute (EEI) and the Nuclear Energy Institute (NEI) filed a joint motion for an extension of time to file comments in response to the Commission's Order on Proposed Clarification issued September 18, 2008, in the above-referenced proceeding. (*Mandatory Reliability Standards for Critical Infrastructure Protection*, 124 FERC ¶ 61,247 (2008) (Proposed Clarification)). EEI and NEI state that because a majority of their members will be required to implement CIP Reliability Standards and NRC cybersecurity requirements in accordance with the clarification to be issued in this docket and because of the complex of the issues addressed in the Proposed Clarification, additional time is needed to submit well-developed comments.

Upon consideration, notice is hereby given that an extension of time for filing comments is granted to and including November 3, 2008.

Nathaniel J. Davis, Sr.,

Deputy Secretary.

[FR Doc. E8–24630 Filed 10–17–08; 8:45 am]

BILLING CODE 6717–01–P

DEPARTMENT OF LABOR

Wage and Hour Division

29 CFR Parts 3 and 5

RIN 1215–AB67

Protecting the Privacy of Workers: Labor Standards Provisions Applicable to Contracts Covering Federally Financed and Assisted Construction

AGENCY: Wage and Hour Division, Employment Standards Administration, Department of Labor.

ACTION: Notice of proposed rulemaking; request for comments.

SUMMARY: In this proposed rule, the Department of Labor (Department or DOL) proposes to revise regulations issued pursuant to the Davis-Bacon and Related Acts and the Copeland Anti-Kickback Act to better protect the personal privacy of laborers and mechanics employed on covered construction contracts.

DATES: Comments must be submitted on or before November 19, 2008.

ADDRESSES: You may submit comments, identified by RIN 1215–AB67, by either one of the following methods:

- *Electronic comments, through the federal eRulemaking Portal: http://www.regulations.gov.* Follow the instructions for submitting comments.
- *Mail:* Wage and Hour Division, Employment Standards Administration, U.S. Department of Labor, Room S–3502, 200 Constitution Avenue, NW., Washington, DC 20210.

Instructions: Please submit one copy of your comments by only one method. All submissions received must include the agency name and Regulatory Information Number (RIN) identified above for this rulemaking. Comments

received will be posted to *http://www.regulations.gov*, including any personal information provided. Because we continue to experience delays in receiving mail in the Washington, DC, area, commenters are strongly encouraged to transmit their comments electronically via the federal eRulemaking Portal at *http://www.regulations.gov* or to submit them by mail early. For additional information on submitting comments and the rulemaking process, see the ''Public Participation'' heading of the **SUPPLEMENTARY INFORMATION** section of this document.

Docket: For access to the docket to read background documents or comments received, go to the federal eRulemaking Portal at *http://www.regulations.gov*.

FOR FURTHER INFORMATION CONTACT: Richard M. Brennan, Director, Office of Interpretations and Regulatory Analysis, Wage and Hour Division, Employment Standards Administration, U.S. Department of Labor, Room S–3506, 200 Constitution Avenue, NW., Washington, DC 20210; *telephone:* (202) 693–0051 (this is not a toll-free number). Copies of this notice may be obtained in alternative formats (Large Print, Braille, Audio Tape or Disc), upon request, by calling (202) 693–0023 (not a toll-free number). TTY/TDD callers may dial toll-free (877) 889–5627 to obtain information or request materials in alternative formats.

Questions of interpretation and/or enforcement of regulations issued by this agency or referenced in this notice may be directed to the nearest Wage and Hour Division (WHD) District Office. Locate the nearest office by calling our toll-free help line at (866) 4USWAGE ((866) 487–9243) between 8 a.m. and 5 p.m. in your local time zone, or log onto the WHD's Web site for a nationwide listing of WHD District and Area Offices at: *http://www.dol.gov/esa/whd/america2.htm*.

SUPPLEMENTARY INFORMATION:

I. Electronic Access and Filing Comments

Public Participation: This notice is available through the **Federal Register** and the *http://www.regulations.gov* Web site. You may also access this notice via the WHD home page at *http://www.dol.gov/esa/whd/regulations/DBRA2008.htm*. To comment electronically on federal rulemakings, go to the federal eRulemaking Portal at *http://www.regulations.gov*, which will allow you to find, review, and submit comments on federal documents that are open for comment and published in the **Federal Register**. Please identify all comments submitted in electronic form by the RIN docket number (1215–AB67). Because of delays in receiving mail in the Washington, DC area, commenters should transmit their comments electronically via the federal eRulemaking Portal at *http://www.regulations.gov*, or submit them by mail early to ensure timely receipt prior to the close of the comment period. Submit one copy of your comments by only one method.

Request for Comments: The DOL requests comments on all issues related to this notice of proposed rulemaking. This proposed rule, if implemented as a final rule, will enhance the privacy of workers and reduce paperwork requirements. The changes will not result in additional compliance costs for regulated entities.

II. Discussion of Changes

Summary of Pertinent Laws: Section 1 of the Davis-Bacon Act (DBA), as amended, 40 U.S.C. 3141 requires that each contract over $2,000 to which the United States or the District of Columbia is a party for the construction, alteration, or repair of public buildings or public works shall contain a clause setting forth the minimum wages to be paid to various classes of laborers and mechanics employed under the contract. The DBA requires contractors or their subcontractors to pay workers employed directly upon the site of the work no less than the locally prevailing wages and fringe benefits paid on projects of a similar character as determined by the Secretary of Labor. Regulations in 29 CFR part 5 contain the Davis-Bacon and Related Acts required contract clauses, and descriptions and interpretations of the labor standards requirements.

The Copeland Anti-Kickback Act, 40 U.S.C. 3145, requires, among other things, that contractors and subcontractors performing work on most federally financed or assisted construction contracts furnish weekly a statement with respect to the wages paid each worker during the preceding week. *See* 29 CFR 3.3(b), 3.4. Contractors must submit weekly a copy of all payrolls to the federal agency contracting for or financing the construction project, if the agency is a party to the contract, but if the agency is not such a party, the contractor will submit the payrolls to the applicant, sponsor, or owner, as the case may be, for transmission to the contracting agency. 29 CFR 5.5(a)(3)(ii)(A). A signed ''Statement of Compliance'' indicating the payrolls are correct and complete and that each laborer or mechanic has been paid not less than the proper Davis-Bacon and Related Act prevailing wage rate for the work performed must accompany the payroll. *Id.* 3.3(b), 5.5(a)(3)(ii)(B). Regulations implementing the Copeland Act are contained in 29 CFR parts 3 and 5.

In addition to the statutory authorities above, Reorganization Plan No. 14 of 1950 conferred upon the Secretary of Labor the authority to coordinate the administration and enforcement of the labor standards provisions of the above laws by the federal agencies providing the federal funding or assistance for the covered construction activities. *See* 5 U.S.C. Appendix.

The Secretary delegated her authority under the Davis-Bacon Act; the Copeland Act, 40 U.S.C. 276c; Reorganization Plan No. 14 of 1950; and the Tennessee Valley Authority Act, 16 U.S.C. 831, the Contract Work Hours and Safety Standards Act, as amended, 40 U.S.C. 327, *et seq.* to the Assistant Secretary for Employment Standards Administration. *See* Secretary's Order 01–2008, issued May 30, 2008, and published in the **Federal Register** on June 6, 2008 (73 FR 32424).

Privacy Protections: Changes are proposed in the contract labor standards clauses that are required to be included in federally funded and assisted construction contracts to protect the privacy of workers by reducing the scope of information required in certified payrolls provided weekly to appropriate federal agencies. The proposed regulatory changes would eliminate social security numbers and home addresses from documents that are provided weekly to non-employing government agencies, contractors, subcontractors, applicants, sponsors, and/or owners.

The current regulations for the Davis-Bacon and Related Acts (DBRA), 29 CFR part 5, require that certified payrolls be provided to the contracting government office for each week of work: ''The payrolls submitted shall set out accurately and completely all of the information required, including ''name, address, and social security number of each such worker* * *.'' 29 CFR 5.5(a)(3)(i), (ii). These requirements flow down to subcontractors as well. *Id.* 5.5(a)(6). Stakeholders in the regulated community have noted concerns with requiring private information like individual workers' social security numbers and addresses on the required payroll submissions.

There is no statutory requirement that the Department require social security numbers or addresses on certified payrolls. In the 1980s, the Employment Standards Administration proposed

eliminating the requirement for weekly submission of the certified payrolls altogether. The final rule was successfully challenged by the American Federation of Labor–Congress of Industrial Organizations (AFL–CIO) as eliminating an important compliance monitor. *See Building & Const. Trades' Dept., AFL–CIO* v. *Donovan*, 712 F.2d 611 (DC Cir. 1983). The court held that the Copeland Act required covered contractors and subcontractors performing work on most federally financed or assisted construction contracts to furnish weekly a statement with respect to the wages paid each worker during the preceding week. Importantly, however, the court noted that there was no specific requirement for what individualized wage information for each covered worker was necessary on the certified payroll submissions. *See Id.* at 633.

The requirements for including social security numbers and home addresses also does not comport with recent guidance on limiting the use of personally identifying information, nor the Department's interests in protecting workers' privacy and preventing identity theft. On May 22, 2007, the Office of Management and Budget issued a Memorandum on ''Safeguarding Against and Responding to the Breach of Personally Identifiable Information.'' Under the memo, government agencies are to reduce ''the volume of collected and retained [personal identifying] information to the minimum necessary; [and limit] access to only those individuals who must have such access.'' OMB Memorandum M–07–16 at 2. The Department of Labor's own Guidelines on the Protection of Personal Identifiable Information (PII), define PII as including ''name, address [and] social security number'' and direct that DOL employees and contractors to safeguard the information. *See* DOL Guidance at *http://www.dol.gov/dol/ppii.htm*. ''Because DOL employees and contractors may have access to personal identifiable information concerning individuals * * *, we have a special responsibility to protect that information from loss and misuse.'' *Id.*

Congress has also focused on protecting the privacy interests of workers in legislation, including for example, the Privacy Act, and the Health Insurance Portability and Accountability Act (HIPAA). Likewise, a number of federal courts have previously recognized concerns that any potential release of certified payrolls has substantial personal privacy implications. For example, courts have held that the release of workers' names, addresses, and social security numbers on Davis-Bacon payroll records under the Freedom of Information Act constitutes a clearly unwarranted invasion of the workers' privacy. *See Sheet Metal Workers Int'l Ass'n, Local No. 19* v. *U.S. Veterans Affairs*, 135 F.3d 891 (3d Cir. 1998) (disclosure of names, social security numbers, or addresses would constitute unwarranted invasion of privacy); *Sheet Metal Workers Int'l Ass'n, Local 9* v. *U.S. Air Force*, 63 F.3d 994 (10th Cir. 1995) (holding release of names alone violated substantial privacy interest); *Painting Indus. Of Haw. Mkt. Recovery Fund* v. *United States Dep't of Air Force*, 26 F.3d 1479 (9th Cir. 1994) (names and addresses); *Painting & Drywall Work Preservation Fund* v. *HUD*, 936 F.2d 1300 (DC Cir. 1991) (same); *Hopkins* v. *HUD*, 929 F.2d 81 (2d Cir. 1991) (same).

With regard to addresses of covered construction workers, it should be noted that the Department has for some time provided for limitations on mandatory weekly disclosures on certified payrolls. The instructions to WHD's optional Form WH–347, which is a model for certified payroll submissions, currently specifies that addresses are only required for the first time the laborer or mechanic performs work on the contract and whenever there is a change of address. The proposal will bring the regulatory provisions in line with the Department's information collection needs.

The Department believes government agencies can ably enforce the requirements of the Copeland Act and Davis-Bacon and Related Acts, without needlessly continuing to expose workers to potential identity theft from weekly transmission of personally identifiable information on payroll records. Construction workers' addresses and social security numbers will continue to be required to be maintained by construction contractors and subcontractors, and government agencies responsible for ensuring compliance with these contract provisions and the WHD will continue to be able to access the social security numbers and addresses of employees from the contractor or subcontractor if necessary for purposes of an audit or investigation, 29 CFR 5.5(a)(3)(i), (iii). For example, certified payrolls are not provided weekly under the Service Contract Act. Consequently, the Department believes that elimination of the weekly submissions of construction workers' social security numbers and address information will not be a barrier to effective enforcement. Accordingly, for the forgoing reasons, it is proposed that section 5.5(a)(3)(ii) of title 29 of the CFR be revised to eliminate the requirement of social security numbers and addresses on weekly submissions of detailed payrolls to the appropriate federal agency. After detailed review of the Copeland Act and consideration of the regulation in accordance with the Paperwork Reduction Act, the Department has determined that the statutory requirement to furnish weekly a detailed payroll with respect to the wages paid each employee during the preceding week can be satisfied by a weekly submission of a payroll without this information. This change is in keeping with the Administration's objective of protecting the privacy interests of this nation's workers and reducing reporting burdens imposed on the public. Importantly, the proposed regulation would still require that the addresses and social security numbers of covered workers be maintained and made available to government agencies upon request to permit government agencies to investigate compliance with the requirements of the Davis-Bacon and Related Acts. The Department also requests input on whether it would be appropriate, as an alternative to eliminating personal addresses altogether from certified payroll submissions, to instead require that the addresses of subcontractor personnel (and any changes of address) be provided to the contractor (or other entity) in direct privity with the government, but not included in weekly submissions.

In addition, WHD's optional Form WH–347, which is a model for certified payroll submissions, will be amended to reflect these requirements and is the subject of a Paperwork Reduction Act notice as discussed more fully below.

The Department also proposes two minor changes to the regulations to reflect current practices. The first of these would eliminate references in the regulations to Form WH–348, as the agency no longer sponsors the form. *See* 29 CFR 3.3(b). The information previously presented on Form WH–348 appears on Form WH–347 and was duplicative. In addition, the proposed rule revises how interested parties may obtain Form WH–347, as the form is no longer available for purchase through the Government Printing Office. *See* 29 CFR 3.3(b) and 5.5(a)(3)(ii)(A).

III. Paperwork Reduction Act

As part of its continuing effort to reduce paperwork and respondent burden, the Department conducts a preclearance consultation program to provide the general public and federal agencies with an opportunity to comment on proposed and continuing

collections of information in accordance with the Paperwork Reduction Act of 1995 (PRA) 44 U.S.C. 3506(c)(2)(A). This program helps to ensure that requested data can be provided in the desired format, reporting burden (time and financial resources) is minimized, collection instruments are clearly understood, and the impact of collection requirements on respondents can be properly assessed. The PRA typically requires an agency to provide notice and seek public comments on any proposed collection of information contained in a proposed rule. *See* 44 U.S.C. 3506(c)(2)(B); 5 CFR 1320.8. Persons are not required to respond to the information collection requirements as contained in this proposal unless and until they are approved by the OMB under the PRA at the final rule stage.

Purpose and Use: The Copeland Act requires contractors and subcontractors performing work on most federally financed or assisted construction contracts to furnish weekly a statement with respect to the wages paid each worker during the preceding week. *See* 40 U.S.C. 3145; 29 CFR 3.3(b), 3.4. Contractors must submit weekly a copy of all payrolls to the federal agency contracting for or financing the construction project, if the agency is a party to the contract, but if the agency is not such a party, the contractor will submit the payrolls to the applicant, sponsor, or owner, as the case may be, for transmission to the contracting agency. 29 CFR 5.5(a)(3)(ii)(A). A signed ''Statement of Compliance'' indicating the payrolls are correct and complete and that each laborer or mechanic has been paid not less than the proper Davis-Bacon Act prevailing wage rate for the work performed must accompany the payroll. *Id.* 3.3(b), 5.5(a)(3)(ii)(B). Contractors must also maintain these records for three years after completion of the work. *Id.* 3.4(b), 5.5(a)(3)(i).

More specifically, the current regulations require contractors performing work on projects subject to Davis-Bacon Act provisions to retain the name, address, social security number, correct classification, hourly rates of wages paid (including rates of contributions or costs anticipated for bona fide fringe benefits or cash equivalents thereof of the types described in Davis-Bacon Act section 1(b)(2)(B)), daily and weekly number of hours worked, deductions made, and actual wages paid to each worker on the contract. *Id.* 5.5(a)(3)(i). Whenever the Secretary of Labor has found under 29 CFR 5.5(a)(1)(iv) that the wages of any laborer or mechanic include the amount of any costs reasonably anticipated in providing benefits under a plan or program described in Davis-Bacon Act section 1(b)(2)(B), the contractor must maintain records showing that the commitment to provide such benefits is enforceable, that the plan or program is financially responsible, that the plan or program has been communicated in writing to the laborers or mechanics affected, and the anticipated or actual costs incurred in providing such benefits. *Id.* Contractors employing apprentices or trainees under approved programs must maintain written evidence of the registration of apprenticeship programs and certification of trainee programs, the registration of the apprentices and trainees, and the ratios and wage rates prescribed in the applicable programs. *Id.* The Department proposes to remove the regulatory requirement that the weekly payroll submitted to the contracting agency contain each worker's social security number and address. The proposal does not remove the requirement for worker addresses and social security numbers to be retained in records maintained by the contractor or subcontractor. *Id.* 5.5(a)(3)(i). *See also Id.* 5.5(a)(6). Government contracting officials and WHD staff use the records maintained by contractors and subcontractors as well as the weekly certified payrolls to verify payment of the required wages for the work performed.

The Department has developed optional use Form WH–347, Payroll Form, which contractors may use to meet the payroll reporting requirements. *Id.* 3.3(b), 5.5(a)(3)(ii)(A). The form contains the basic payroll information that contractors must furnish each week they perform any work subject to Davis-Bacon Act provisions. The contractor also completes, dates, and signs a statement on the reverse side of the form to meet the certification requirement. The contractor submits the completed form weekly to the contracting agency. 29 CFR 5.5(a)(3)(ii)(A). The contractor may substitute copies of its payroll containing all of the required information and provide the required certification. *Id.*

Information Technology: In accordance with the Government Paperwork Elimination Act (GPEA), 44 U.S.C. 3504, the WHD has posted Form WH–347 on the Internet (*http://www.dol.gov/esa/whd/forms/wh347.pdf*) in a printable and fillable format that automatically performs some mathematical calculations. Individual contracting agencies determine any electronic submission options, because contractors submit the information directly to each contracting agency, not to the Department. 29 CFR 5.5(a)(3)(ii)(A). In 2004, WHD issued a letter to the U.S. Army Corps of Engineers and the Federal Highway Administration advising that the submission of electronic signatures satisfied the requirements of the Copeland Act and its regulations. It is the Department's understanding that some agencies have set up systems to gather these records electronically and the Department encourages these and other initiatives to increase efficiency and requests comments on any additional methods to improve efficient compliance with the certified payroll requirements.

Similarly, the submission of photocopies or other automated duplication of the contractor's regular payrolls containing all of the required information pertinent to the government construction project(s) is sufficient to satisfy the payroll data requirements. 29 CFR 5.5(a)(3)(ii)(A).

Public Burden Estimates: This proposed rule introduces no new information collection requirements nor proposes any substantive or material changes to the existing information collection requirements noted above. The Department, however, is proposing to remove the requirement to report an employee's social security number and address, which the Department estimates will reduce the average reporting time from an average of 56 minutes per response to 54 minutes per response.

The Department bases the following burden estimates for this information collection on agency experience, except as otherwise noted. F.W. Dodge Report data for the period June 1, 2007, through May 31, 2008, indicate there were 109,323 State and local construction projects and 3032 federal construction projects. The Department estimates that approximately 33 percent of State and local construction projects utilize federal funds, resulting in an estimated 36,077 State and local construction projects being subject to Davis-Bacon labor standards (109,323 projects × 33 percent). Added to the 3032 federal projects, this would be an estimated 39,109 annual projects subject to Davis-Bacon labor standards.

The Department estimates these projects have an average of 8 contractors or subcontractors, resulting in 312,872 individual contractor and subcontractor projects (39,109 projects × 8 contractors and subcontractors per project = 312,872 individual projects).

To yield the estimated number of respondents, the Department estimates that, on a per capita basis, each covered construction contractor annually works

on an average of four projects subject to Davis-Bacon Act provisions. Thus, 312,872 individual projects divided by 4 Davis-Bacon projects per contractor equals 78,218 respondents.

The Department also estimates that a typical contractor or subcontractor on average submits 23 certified payrolls per individual project. Thus, 312,872 individual projects multiplied by 23 weekly responses equal 7,196,056 total annual responses.

The 7,196,056 responses multiplied by 54 minutes (estimated time to complete Form WH–347 or its equivalent) equal 388,587,024 minutes or 6,476,450 hours (rounded).

Public Comments: Stakeholders have expressed concerns about requiring submission of personal identifying information, particularly social security numbers and personal home addresses, on the weekly payroll submissions. The proposed regulations would remove the requirement for workers' addresses and social security numbers to appear on payrolls submitted to contracting agencies; however, federal construction contractors will still be required to maintain this information in the payroll records the contractors maintain for projects subject to Davis-Bacon Act provisions.

The Department seeks additional public comments regarding the burdens imposed by information collections contained in this proposed rule. In particular, the Department seeks comments that: Evaluate whether the proposed collection of information is necessary for the proper performance of the functions of the agency, including whether the information will have practical utility; evaluate the accuracy of the agency's estimate of the burden of the proposed collection of information, including the validity of the methodology and assumptions used; enhance the quality, utility and clarity of the information to be collected; and minimize the burden of the collection of information on those who are to respond, including through the use of appropriate automated, electronic, mechanical, or other technological collection techniques or other forms of information technology, *e.g.*, permitting electronic submissions of responses. Commenters may send their views about these information collections to the Department in the same way as all other comments (*e.g.*, through the regulations.gov Web site).

An agency may not conduct an information collection unless it has a currently valid OMB approval and the Department has submitted the identified information collections contained in the proposed rule to the OMB for review under the PRA under Control Number 1215–0149. *See* 44 U.S.C. 3507(d); 5 CFR 1320.11. While much of the information provided to the OMB in support of the information collection request appears in this preamble, interested parties may obtain a copy of the full supporting statement by sending a written request to the mail address shown in the **ADDRESSES** section at the beginning of this preamble or by visiting the *http://www.reginfo.gov/public/do/PRAMain* Web site.

In addition to having an opportunity to file comments with the Department, comments about the paperwork implications of the proposed regulations may be addressed to the OMB. Comments to the OMB should be directed to: Office of Information and Regulatory Affairs, Attention OMB Desk Officer for the Employment Standards Administration (ESA), Office of Management and Budget, Room 10235, Washington, DC 20503, Telephone: 202–395–7316/Fax: 202–395–6974 (these are not toll-free numbers).

Please note that the current authorization for the Davis-Bacon Certified Payroll information collection expires April 30, 2009. On October 1, 2008, the Department published a routine Paperwork Reduction Act notice in the **Federal Register** seeking comments on the existing Davis-Bacon information collection requirements that are also the subject of this proposal. 73 FR 57153. Any comments submitted to the October 1 request will be reviewed in light of the current proposal.

IV. Executive Order 12866; Small Business Regulatory Enforcement Fairness Act; Regulatory Flexibility

This proposed rule is not economically significant within the meaning of Executive Order 12866, or a ''major rule'' under the Unfunded Mandates Reform Act or Section 801 of the Small Business Regulatory Enforcement Fairness Act.

The Department believes that a reduction in the amount of information required on certified payrolls provided weekly under Davis-Bacon is a reduction in regulatory compliance costs. While some contractors may have to slightly reconfigure their systems to produce the revised version, most have access to computerized systems that can easily be revised to remove data. Those contractors who currently use the optional WH Form will actually have an overall decrease of total administrative costs.

Conclusion: The Department concludes that incorporating these changes into the Davis-Bacon regulations will not impose any measurable costs on any private or public sector entity.

Furthermore, because the proposed rule will not impose any measurable costs on employers, the Department certifies that it would not have a significant economic impact on a substantial number of small entities. Accordingly, the Department need not prepare an initial regulatory flexibility analysis under the Regulatory Flexibility Act (5 U.S.C. 601 *et seq.*). The Department has certified this conclusion to the Chief Counsel for Advocacy of the Small Business Administration.

V. Unfunded Mandates Reform Act

This proposed rule has been reviewed in accordance with the Unfunded Mandates Reform Act of 1995 (UMRA). 2 U.S.C. 1501 *et seq*. For the purposes of the UMRA, the Department certifies that this rule does not impose any federal mandate that may result in increased expenditures by State, local, or tribal governments, or increased expenditures by the private sector, of more than $100 million in any year.

VI. Executive Order 13132 (Federalism)

The Department has reviewed this rule in accordance with the Executive Order on Federalism (Executive Order 13132, 64 FR 43255, Aug. 10, 1999). This rule does not have federalism implications as outlined in E.O. 13132. The rule does not have substantial direct effects on the states, on the relationship between the national government and the states, or on the distribution of power and responsibilities among the various levels of government.

VII. Executive Order 13175, Indian Tribal Governments

The Department has reviewed this rule under the terms of Executive Order 13175 and determined it did not have ''tribal implications.'' The rule does not have ''substantial direct effects on one or more Indian tribes, on the relationship between the federal government and Indian tribes, or on the distribution of power and responsibilities between the federal government and Indian tribes.'' As a result, no tribal summary impact statement has been prepared.

VIII. Effects on Families

The Department certifies that this rule will not adversely affect the well-being of families, as discussed under section 654 of the Treasury and General Government Appropriations Act, 1999.

IX. Executive Order 13045, Protection of Children

The Department has reviewed this rule under the terms of Executive Order 13045 and determined this action is not subject to E.O. 13045 because it is not economically significant as defined in E.O. 12866 and it does not impact the environmental health or safety risks of children.

X. Environmental Impact Assessment

The Department has reviewed this rule in accordance with the requirements of the National Environmental Policy Act of 1969 (NEPA), 42 U.S.C. 4321 *et seq.*, the regulations of the Council of Environmental Quality, 40 CFR 1500 *et seq.*, and the Departmental NEPA procedures, 29 CFR part 11, and determined that this rule will not have a significant impact on the quality of the human environment. There is, thus, no corresponding environmental assessment or an environmental impact statement.

XI. Executive Order 13211, Energy Supply

The Department has determined that this rule is not subject to Executive Order 13211. It will not have a significant adverse effect on the supply, distribution or use of energy.

XII. Executive Order 12630, Constitutionally Protected Property Rights

The Department has determined that this rule is not subject to Executive Order 12630 because it does not involve implementation of a policy ''that has taking implications'' or that could impose limitations on private property use.

XIII. Executive Order 12988, Civil Justice Reform Analysis

The Department drafted and reviewed this proposed rule in accordance with Executive Order 12988 and determined that the rule will not unduly burden the federal court system. The rule was: (1) Reviewed to eliminate drafting errors and ambiguities; (2) written to minimize litigation; and (3) written to provide a clear legal standard for affected conduct and to promote burden reduction.

List of Subjects

29 CFR Part 3

Government contracts, Labor, Paperwork, Law enforcement.

29 CFR Part 5

Government contracts, Labor, Paperwork, Law enforcement.

Signed at Washington, DC. this 14th day of October, 2008.

Victoria A. Lipnic,

Assistant Secretary, Employment Standards Administration.

Alexander J. Passantino,

Acting Administrator, Wage and Hour Division.

For the reasons set forth above, the Department proposes to amend Title 29, Parts 3 and 5 of the Code of Federal Regulations as follows:

PART 3—CONTRACTORS AND SUBCONTRACTORS ON PUBLIC BUILDING OR PUBLIC WORK FINANCED IN WHOLE OR IN PART BY LOANS OR GRANTS FROM THE UNITED STATES

1. The authority citation for Part 3 is proposed to be revised to read as follows:

Authority: R.S. 161, sec. 2, 48 Stat. 848; Reorg. Plan No. 14 of 1950, 64 Stat. 1267; 5 U.S.C. 301; 40 U.S.C. 3145; Secretary's Order 01–2008; and Employment Standards Order No. 2001–01.

2. Section 3.3 is amended by revising paragraph (b) to read as follows:

§ 3.3 Weekly statement with respect to payment of wages.

* * * * *

(b) Each contractor or subcontractor engaged in the construction, prosecution, completion, or repair of any public building or public work, or building or work financed in whole or in part by loans or grants from the United States, shall furnish each week a statement with respect to the wages paid each of its employees engaged on work covered by this part 3 and part 5 of this title during the preceding weekly payroll period. This statement shall be executed by the contractor or subcontractor or by an authorized officer or employee of the contractor or subcontractor who supervises the payment of wages, and shall be on the back of Form WH 347, ''Payroll (For Contractors Optional Use)'' or on any form with identical wording. Copies of Form WH 347 may be obtained from the Government contracting or sponsoring agency or from the Wage and Hour Division Web site at *http://www.dol.gov/esa/whd/forms/wh347instr.htm* or its successor site.

* * * * *

PART 5—LABOR STANDARDS PROVISIONS APPLICABLE TO CONTRACTS COVERING FEDERALLY FINANCED AND ASSISTED CONSTRUCTION (ALSO LABOR STANDARDS PROVISIONS APPLICABLE TO NONCONSTRUCTION CONTRACTS SUBJECT TO THE CONTRACT WORK HOURS AND SAFETY STANDARDS ACT)

3. The authority citation for part 5 is revised to read as follows:

Authority: 5 U.S.C. 301; R.S. 161, 64 Stat. 1267; Reorganization Plan No. 14 of 1950, 5 U.S.C. appendix; 40 U.S.C. 3141 *et seq.*; 40 U.S.C. 3145; 40 U.S.C. 3148; 40 U.S.C. 3701 *et seq.*; and the laws listed in 5.1(a) of this part; Secretary's Order 01–2008; and Employment Standards Order No. 2001–01.

6. Section 5.5 is amended by revising paragraph (a)(3)(ii)(A) to read as follows:

§ 5.5 Contract provisions and related matters.

(a) * * *

(3) * * * (ii)(A) The contractor shall submit weekly for each week in which any contract work is performed a copy of all payrolls to the (write in name of appropriate federal agency) if the agency is a party to the contract, but if the agency is not such a party, the contractor will submit the payrolls to the applicant, sponsor, or owner, as the case may be, for transmission to the (write in name of agency). The payrolls submitted shall set out accurately and completely all of the information required to be maintained under 29 CFR 5.5(a)(3)(i), except that social security numbers and home addresses shall not be included on any weekly transmittals. The required weekly information may be submitted in any form desired. Optional Form WH–347 is available for this purpose from the Wage and Hour Division Web site at *http://www.dol.gov/esa/whd/forms/wh347instr.htm* or its successor site. The prime contractor is responsible for the submission of copies of payrolls by all subcontractors.

* * * * *

[FR Doc. E8–24762 Filed 10–17–08; 8:45 am]

BILLING CODE 4510–27–P

DEPARTMENT OF HOMELAND SECURITY

Coast Guard

33 CFR Part 165

[Docket No. USCG–2008–0752]

RIN 1625–AA87

Security Zone; West Basin, Port Canaveral Harbor, Cape Canaveral, FL

AGENCY: Coast Guard, DHS.

ACTION: Notice of proposed rulemaking.

SUMMARY: The Coast Guard proposes to establish a security zone encompassing the navigable waters of the West Basin, Port Canaveral Harbor, Cape Canaveral, Florida. This security zone would be activated 4 hours prior to the scheduled arrival of a cruise ship at the West Basin. It is only enforceable during Maritime Security (MARSEC) Levels 2 and 3 or when there is a specific credible threat during MARSEC Level 1. This security zone would remain activated until the departure of all cruise ships from the West Basin.

DATES: Comments and related material must reach the Coast Guard on or before December 19, 2008.

ADDRESSES: You may submit comments identified by Coast Guard docket number USCG–2008–0752 to the Docket Management Facility at the U.S. Department of Transportation. To avoid duplication, please use only one of the following methods:

(1) *Online: http://www.regulations.gov.*

(2) *Mail:* Docket Management Facility (M–30), U.S. Department of Transportation, West Building Ground Floor, Room W12–140, 1200 New Jersey Avenue, SE., Washington, DC 20590–0001.

(3) *Hand delivery:* Same as mail address above, between 9 a.m. and 5 p.m., Monday through Friday, except Federal holidays. The telephone number is 202–366–9329.

(4) *Fax:* 202–493–2251.

FOR FURTHER INFORMATION CONTACT: If you have questions on this proposed rule, call Lieutenant Commander Mark Gibbs at Coast Guard Sector Jacksonville Prevention Department. Contact telephone is 904–564–7563. If you have questions on viewing or submitting material to the docket, call Renee V. Wright, Program Manager, Docket Operations, telephone 202–366–9826.

SUPPLEMENTARY INFORMATION:

Public Participation and Request for Comments

We encourage you to participate in this rulemaking by submitting comments and related materials. All comments received will be posted, without change, to *http://www.regulations.gov* and will include any personal information you have provided. We have an agreement with the Department of Transportation to use the Docket Management Facility.

Submitting Comments

If you submit a comment, please include the docket number for this rulemaking (USCG–2008–0752), indicate the specific section of this document to which each comment applies, and give the reason for each comment. We recommend that you include your name and a mailing address, an e-mail address, or a phone number in the body of your document so that we can contact you if we have questions regarding your submission. You may submit your comments and material by electronic means, mail, fax, or delivery to the Docket Management Facility at the address under **ADDRESSES**; but please submit your comments and material by only one means. If you submit them by mail or delivery, submit them in an unbound format, no larger than 8½ by 11 inches, suitable for copying and electronic filing. If you submit them by mail and would like to know that they reached the Facility, please enclose a stamped, self-addressed postcard or envelope. We will consider all comments and material received during the comment period. We may change this proposed rule in view of them.

Viewing Comments and Documents

To view comments, as well as documents mentioned in this preamble as being available in the docket, go to *http://www.regulations.gov* at any time. Enter the docket number for this rulemaking (USCG–2008–0752) in the Search Documents box, and click ''Go >>.'' You may also visit either the Docket Management Facility in Room W12–140 on the ground floor of the Department of Transportation West Building, 1200 New Jersey Avenue, SE., Washington, DC 20590, between 9 a.m. and 5 p.m., Monday through Friday, except Federal holidays; or the Coast Guard Sector Jacksonville Prevention Department, 4200 Ocean St., Atlantic Beach, FL 32233–2416 between 7:30 a.m. and 5 p.m., Monday through Friday, except Federal holidays.

Privacy Act

Anyone can search the electronic form of all comments received into any of our dockets by the name of the individual submitting the comment (or signing the comment, if submitted on behalf of an association, business, labor union, etc.). You may review a Privacy Act notice regarding our public dockets in the January 17, 2008 issue of the **Federal Register** (73 FR 3316).

Public Meeting

We do not now plan to hold a public meeting. But you may submit a request for one to the Docket Management Facility at the address under **ADDRESSES** explaining why one would be beneficial. If we determine that one would aid this rulemaking, we will hold one at a time and place announced by a later notice in the **Federal Register**.

Background and Purpose

The September 11, 2001, terrorist attacks on the World Trade Center complex in New York and the Pentagon in Arlington, Virginia, proved the devastating effects of subversive activity on U.S. critical infrastructure. Since that time, the Coast Guard has been taking action to ensure the security of maritime critical infrastructure and key resources throughout the country.

Subversive activity towards cruise ships and their associated passengers and crew is of paramount concern to the Coast Guard. Therefore, in order to strengthen security and further control access to the West Basin, the Captain of the Port Jacksonville has decided, after consultation with the Northeast and Eastern Central Florida Area Maritime Security Committee and in cooperation with the Canaveral Port Authority, to implement a security zone encompassing the West Basin. This security zone is only enforceable during MARSEC Levels 2 and 3 or when there is a specified credible threat during MARSEC Level 1.

As reflected in 33 CFR 101.105, Maritime Security (MARSEC) level means the level set to reflect the prevailing threat environment to the marine elements of the national transportation system, including ports, vessels, facilities, and critical assets and infrastructure located on or adjacent to waters subject to the jurisdiction of the U.S. The higher the level number, the greater the threat:

MARSEC Level 1 means the level for which minimum appropriate protective security measures shall be maintained at all times.

MARSEC Level 2 means the level for which appropriate additional protective security measures shall be maintained for a period of

time as a result of heightened risk of a transportation security incident.

MARSEC Level 3 means the level for which further specific protective security measures shall be maintained for a limited period of time when a transportation security incident is probable or imminent, although it may not be possible to identify the specific target.

As specified in 33 CFR 101.300, the Captain of the Port will communicate any changes in the MARSEC levels through a local Broadcast Notice to Mariners, an electronic means, if available, or as detailed in the Area Maritime Security Plan developed under 46 U.S.C. 70103(b).

Discussion of Proposed Rule

The security zone area includes all waters of the West Basin, Port Canaveral Harbor, Cape Canaveral, FL northwest of an imaginary line between two points: 28°24′57.88″ N, 080°37′25.69″ W to 28°24′37.48″ N, 080°37′34.03″ W. When the security zone is activated, and thus subject to enforcement, entry is prohibited unless specifically authorized by the Captain of the Port Jacksonville or his designated representative.

This security zone would be activated 4 hours before the scheduled arrival of a cruise ship at the West Basin. It is only enforceable during MARSEC Levels 2 and 3 or when the COTP determines there is a specific credible threat during MARSEC Level 1. This security zone would remain activated until the departure of all cruise ships from the West Basin or when the credible threat no longer exists. The restriction of vessel movements within this security zone is intended to prohibit the movement of all vessels not operated by a local, State, or Federal law enforcement organization unless specifically authorized by the Captain of the Port, or his designated representative. The public would be notified when the security zone is activated by the display of a red flag on a 50-foot pole located at the east end of Cruise Ship terminal 10 that is visible from all approaches to the zone.

Regulatory Analyses

We developed this proposed rule after considering numerous statutes and executive orders related to rulemaking. Below we summarize our analyses based on 13 of these statutes or executive orders.

Regulatory Planning and Review

This proposed rule is not a significant regulatory action under section 3(f) of Executive Order 12866, Regulatory Planning and Review, and does not require an assessment of potential costs and benefits under section 6(a)(3) of that Order. The Office of Management and Budget has not reviewed it under that Order.

It is not a significant action because this security zone would be activated 4 hours prior to the scheduled arrival of a cruise ship at the West Basin. It is only enforceable during MARSEC Levels 2 and 3 or when there is not a specific credible threat during MARSEC Level 1. Once activated, this security zone would remain activated until the departure of all cruise ships from the West Basin or when the COTP determines there is a specific credible threat during MARSEC Level 1. This security zone would be wholly confined within the existing West Basin and would not impede traffic transiting from the Banana River to the Atlantic Ocean.

Small Entities

Under the Regulatory Flexibility Act (5 U.S.C. 601–612), we have considered whether this proposed rule would have a significant economic impact on a substantial number of small entities. The term ''small entities'' comprises small businesses, not-for-profit organizations that are independently owned and operated and are not dominant in their fields, and governmental jurisdictions with populations of less than 50,000.

The Coast Guard certifies under 5 U.S.C. 605(b) that this proposed rule would not have a significant economic impact on a substantial number of small entities. This security zone would be activated 4 hours prior to the scheduled arrival of a cruise ship at the West Basin. It is only enforceable during MARSEC Levels 2 and 3 or when there is a specific credible threat during MARSEC Level 1. Once activated, this security zone would remain activated until the departure of all cruise ships from the West Basin. This security zone would be wholly confined within the existing West Basin and would not impede traffic transiting from the Banana River to the Atlantic Ocean.

If you think that your business, organization, or governmental jurisdiction qualifies as a small entity and that this rule would have a significant economic impact on it, please submit a comment (see **ADDRESSES**) explaining why you think it qualifies and how and to what degree this rule would economically affect it.

Assistance for Small Entities

Under section 213(a) of the Small Business Regulatory Enforcement Fairness Act of 1996 (Pub. L. 104–121), we want to assist small entities in understanding this proposed rule so that they can better evaluate its effects on them and participate in the rulemaking. If the proposed rule would affect your small business, organization, or governmental jurisdiction and you have questions concerning its provisions or options for compliance, please contact Lieutenant Commander Mark Gibbs at Coast Guard Sector Jacksonville Prevention Department. Contact telephone is 904–564–7563. The Coast Guard will not retaliate against small entities that question or complain about this proposed rule or any policy or action of the Coast Guard.

Collection of Information

This proposed rule would call for no new collection of information under the Paperwork Reduction Act of 1995 (44 U.S.C. 3501–3520).

Federalism

A rule has implications for federalism under Executive Order 13132, Federalism, if it has a substantial direct effect on State or local governments and would either preempt State law or impose a substantial direct cost of compliance on them. We have analyzed this proposed rule under that Order and have determined that it does not have implications for federalism.

Unfunded Mandates Reform Act

The Unfunded Mandates Reform Act of 1995 (2 U.S.C. 1531–1538) requires Federal agencies to assess the effects of their discretionary regulatory actions. In particular, the Act addresses actions that may result in the expenditure by a State, local, or tribal government, in the aggregate, or by the private sector of $100,000,000 or more in any one year. Though this proposed rule would not result in such an expenditure, we do discuss the effects of this rule elsewhere in this preamble.

Taking of Private Property

This proposed rule would not effect a taking of private property or otherwise have taking implications under Executive Order 12630, Governmental Actions and Interference with Constitutionally Protected Property Rights.

Civil Justice Reform

This proposed rule meets applicable standards in sections 3(a) and 3(b)(2) of Executive Order 12988, Civil Justice Reform, to minimize litigation, eliminate ambiguity, and reduce burden.

Protection of Children

We have analyzed this proposed rule under Executive Order 13045,

Protection of Children from Environmental Health Risks and Safety Risks. This rule is not an economically significant rule and would not create an environmental risk to health or risk to safety that might disproportionately affect children.

Indian Tribal Governments

This proposed rule does not have tribal implications under Executive Order 13175, Consultation and Coordination with Indian Tribal Governments, because it would not have a substantial direct effect on one or more Indian tribes, on the relationship between the Federal Government and Indian tribes, or on the distribution of power and responsibilities between the Federal Government and Indian tribes. We invite your comments on how this proposed rule might impact tribal governments, even if that impact may not constitute a ''tribal implication'' under the Order.

Energy Effects

We have analyzed this proposed rule under Executive Order 13211, Actions Concerning Regulations That Significantly Affect Energy Supply, Distribution, or Use. We have determined that it is not a ''significant energy action'' under that order because it is not a ''significant regulatory action'' under Executive Order 12866 and is not likely to have a significant adverse effect on the supply, distribution, or use of energy. The Administrator of the Office of Information and Regulatory Affairs has not designated it as a significant energy action. Therefore, it does not require a Statement of Energy Effects under Executive Order 13211.

Technical Standards

The National Technology Transfer and Advancement Act (NTTAA) (15 U.S.C. 272 note) directs agencies to use voluntary consensus standards in their regulatory activities unless the agency provides Congress, through the Office of Management and Budget, with an explanation of why using these standards would be inconsistent with applicable law or otherwise impractical. Voluntary consensus standards are technical standards (e.g., specifications of materials, performance, design, or operation; test methods; sampling procedures; and related management systems practices) that are developed or adopted by voluntary consensus standards bodies.

This proposed rule does not use technical standards. Therefore, we did not consider the use of voluntary consensus standards.

Environment

We have analyzed this proposed rule under Department of Homeland Security Management Directive 5100.1 and Commandant Instruction M16475.lD, which guide the Coast Guard in complying with the National Environmental Policy Act of 1969 (NEPA) (42 U.S.C. 4321–4370f), and have made a preliminary determination under the Instruction that this action is not likely to have a significant effect on the human environment. An environmental analysis checklist supporting this preliminary determination is available in the docket where indicated under **ADDRESSES**. We seek any comments or information that may lead to the discovery of a significant environmental impact from this proposed rule.

List of Subjects in 33 CFR Part 165

Harbors, Marine safety, Navigation (water), Reporting and recordkeeping requirements, Security measures, Waterways.

For the reasons discussed in the preamble, the Coast Guard proposes to amend 33 CFR part 165 as follows:

PART 165—REGULATED NAVIGATION AREAS AND LIMITED ACCESS AREAS

1. The authority citation for part 165 continues to read as follows:

Authority: 33 U.S.C. 1226, 1231; 46 U.S.C. Chapter 701; 50 U.S.C. 191; 33 CFR 1.05–1, 6.04–1, 6.04–6, 160.5; Pub. L. 107–295, 116 Stat. 2064; Department of Homeland Security Delegation No. 0170.1.

2. Add § 165.777 to read as follows:

§ 165.777 Security Zone; West Basin, Port Canaveral Harbor, Cape Canaveral, Florida.

(a) *Regulated Area*. The following area is a security zone: All waters of the West Basin of Port Canaveral Harbor northwest of an imaginary line between two points: 28°24′57.88″ N, 080°37′25.69″ W to 28°24′37.48″ N, 080°37′34.03″ W.

(b) *Requirement*. (1) This security zone will be activated 4 hours prior to the scheduled arrival of a cruise ship at the West Basin of Port Canaveral Harbor during MARSEC Levels 2 and 3 or when the Captain of the Port Jacksonville (COTP) determines there is a specified credible threat during MARSEC Level 1. This security zone will not be deactivated until the departure of all cruise ships from the West Basin. The zone is subject to enforcement when it is activated.

(2) Under general security zone regulations of 33 CFR 165.33, no vessel or person may enter or navigate within the regulated area unless specifically authorized by the COTP or the COTP's designated representative. Any person or vessel authorized to enter the security zone must operate in strict conformance with any direction given by the COTP or a designated representative and leave the security zone immediately if so ordered.

(3) The public will be notified when the security zone is activated by the display of a red flag on a 50-foot pole located at the east end of Cruise Ship terminal 10. This red flag will be lowered when the security zone is deactivated.

(c) *Definitions*. The following definition applies to this section:

Designated representative means Coast Guard Patrol Commanders including Coast Guard coxswains, petty officers and other officers operating Coast Guard vessels, and federal, state, and local law enforcement officers designated by or assisting the COTP in the enforcement of the security zone.

(d) *Captain of the Port Contact Information*. If you have questions about this regulation, please contact the Sector Command Center at (904) 564–7513.

(e) *Enforcement periods*. This section will only be subject to enforcement when the security zone described in paragraph (a) is activated as specified in paragraph (b)(1) of this section.

Dated: September 29, 2008.

Paul F. Thomas,

Captain, U.S. Coast Guard, Captain of the Port Jacksonville.

[FR Doc. E8–24808 Filed 10–17–08; 8:45 am]

BILLING CODE 4910–15–P

FEDERAL COMMUNICATIONS COMMISSION

47 CFR Part 73

[DA 08–2117; MB Docket No. 08–194; RM–11488]

Television Broadcasting Services; Huntsville, AL

AGENCY: Federal Communications Commission.

ACTION: Proposed rule.

SUMMARY: The Commission requests comments on a channel substitution proposed by Local TV Alabama License, LLC (''Local TV''), the licensee of station WHNT–DT, DTV channel 19, Huntsville, Alabama. Local TV requests the substitution of DTV channel 46 for channel 19 at Huntsville.

DATES: Comments must be filed on or before November 19, 2008, and reply comments on or before December 4, 2008.

ADDRESSES: Federal Communications Commission, Office of the Secretary, 445 12th Street, SW., Washington, DC 20554. In addition to filing comments with the FCC, interested parties should serve counsel for petitioner as follows: Scott S. Patrick, Esq., Dow Lohnes PLLC, 1200 New Hampshire Avenue, NW., Suite 800, Washington, DC 20036—6802.

FOR FURTHER INFORMATION CONTACT: David J. Brown, *david.brown@fcc.gov*, Media Bureau, (202) 418–1600.

SUPPLEMENTARY INFORMATION: This is a synopsis of the Commission's Notice of Proposed Rule Making, MB Docket No. 08–194, adopted September 12, 2008, and released September 23, 2008. The full text of this document is available for public inspection and copying during normal business hours in the FCC's Reference Information Center at Portals II, CY–A257, 445 12th Street, SW., Washington, DC 20554. This document will also be available via ECFS (*http://www.fcc.gov/cgb/ecfs/*). (Documents will be available electronically in ASCII, Word 97, and/or Adobe Acrobat.) This document may be purchased from the Commission's duplicating contractor, Best Copy and Printing, Inc., 445 12th Street, SW., Room CY–B402, Washington, DC 20554, telephone 1–800–478–3160 or via e-mail *http://www.BCPIWEB.com*. To request this document in accessible formats (computer diskettes, large print, audio recording, and Braille), send an e-mail to *fcc504@fcc.gov* or call the Commission's Consumer and Governmental Affairs Bureau at (202) 418–0530 (voice), (202) 418–0432 (TTY). This document does not contain proposed information collection requirements subject to the Paperwork Reduction Act of 1995, Public Law 104–13. In addition, therefore, it does not contain any proposed information collection burden ''for small business concerns with fewer than 25 employees,'' pursuant to the Small Business Paperwork Relief Act of 2002, Public Law 107–198, *see* 44 U.S.C. 3506(c)(4).

Provisions of the Regulatory Flexibility Act of 1980 do not apply to this proceeding. Members of the public should note that from the time a Notice of Proposed Rule Making is issued until the matter is no longer subject to Commission consideration or court review, all *ex parte* contacts are prohibited in Commission proceedings, such as this one, which involve channel allotments. See 47 CFR 1.1204(b) for rules governing permissible ex parte contacts.

For information regarding proper filing procedures for comments, see 47 CFR 1.415 and 1.420.

List of Subjects in 47 CFR Part 73

Television, Television broadcasting.

For the reasons discussed in the preamble, the Federal Communications Commission proposes to amend 47 CFR Part 73 as follows:

PART 73—RADIO BROADCAST SERVICES

1. The authority citation for part 73 continues to read as follows:

Authority: 47 U.S.C. 154, 303, 334, 336.

§ 73.622 [Amended]

2. Section 73.622(i), the DTV Table of Allotments under Alabama, is amended by adding channel 46 and removing channel 19 at Huntsville.

Federal Communications Commission.

Clay C. Pendarvis,

Associate Chief, Video Division, Media Bureau.

[FR Doc. E8–24911 Filed 10–17–08; 8:45 am]

BILLING CODE 6712–01–P

FEDERAL COMMUNICATIONS COMMISSION

47 CFR Part 73

[DA 08–1499; MB Docket No. 08–104; RM–11442]

Television Broadcasting Services; Danville, KY

AGENCY: Federal Communications Commission.

ACTION: Proposed rule.

SUMMARY: The Commission requests comments on a channel substitution proposed by WDKY Licensee, LLC (''WDKY''), the licensee of WDKY–DT, post-transition DTV channel 4, Danville, Kentucky. WDKY requests the substitution of DTV channel 31 for post-transition DTV channel 4 at Fort Worth.

DATES: Comments must be filed on or before November 19, 2008, and reply comments on or before December 4, 2008.

ADDRESSES: Federal Communications Commission, Office of the Secretary, 445 12th Street, SW., Washington, D.C. 20554. In addition to filing comments with the FCC, interested parties should serve counsel for petitioner as follows: Clifford M. Harrington, Esq., Pillsbury Winthrop Shaw Pitman, LLP, 2300 N Street, NW., Washington, DC 20037–1128.

FOR FURTHER INFORMATION CONTACT: Shaun A. Maher, *shaun.maher@fcc.gov*, Media Bureau, (202) 418–1600.

SUPPLEMENTARY INFORMATION: This is a synopsis of the Commission's Notice of Proposed Rule Making, MB Docket No. 08–104, adopted September 25, 2008, and released October 1, 2008. The full text of this document is available for public inspection and copying during normal business hours in the FCC's Reference Information Center at Portals II, CY–A257, 445 12th Street, SW., Washington, DC 20554. This document will also be available via ECFS (*http://www.fcc.gov/cgb/ecfs/*). (Documents will be available electronically in ASCII, Word 97, and/or Adobe Acrobat.) This document may be purchased from the Commission's duplicating contractor, Best Copy and Printing, Inc., 445 12th Street, SW., Room CY–B402, Washington, DC 20554, telephone 1–800–478–3160 or via e-mail *http://www.BCPIWEB.com*. To request this document in accessible formats (computer diskettes, large print, audio recording, and Braille), send an e-mail to *fcc504@fcc.gov* or call the Commission's Consumer and Governmental Affairs Bureau at (202) 418–0530 (voice), (202) 418–0432 (TTY). This document does not contain proposed information collection requirements subject to the Paperwork Reduction Act of 1995, Public Law 104–13. In addition, therefore, it does not contain any proposed information collection burden ''for small business concerns with fewer than 25 employees,'' pursuant to the Small Business Paperwork Relief Act of 2002, Public Law 107–198, *see* 44 U.S.C. 3506(c)(4).

Provisions of the Regulatory Flexibility Act of 1980 do not apply to this proceeding. Members of the public should note that from the time a Notice of Proposed Rule Making is issued until the matter is no longer subject to Commission consideration or court review, all *ex parte* contacts are prohibited in Commission proceedings, such as this one, which involve channel allotments. See 47 CFR 1.1204(b) for rules governing permissible *ex parte* contacts.

For information regarding proper filing procedures for comments, see 47 CFR 1.415 and 1.420.

List of Subjects in 47 CFR Part 73

Television, Television broadcasting.

For the reasons discussed in the preamble, the Federal Communications Commission proposes to amend 47 CFR Part 73 as follows:

PART 73—RADIO BROADCAST SERVICES

1. The authority citation for part 73 continues to read as follows:

Authority: 47 U.S.C. 154, 303, 334, 336.

§ 73.622(i) [Amended]

2. Section 73.622(i), the Post-Transition Table of DTV Allotments under Kentucky, is amended by adding channel 31 and removing channel 4 at Danville.

Federal Communications Commission.

Clay C. Pendarvis,

Associate Chief, Video Division, Media Bureau.

[FR Doc. E8–24913 Filed 10–17–08; 8:45 am]

BILLING CODE 6712–01–P

FEDERAL COMMUNICATIONS COMMISSION

47 CFR Part 73

[DA 08–1496; MB Docket No. 08–115; RM–11445]

Television Broadcasting Services; Omaha, NE

AGENCY: Federal Communications Commission.

ACTION: Proposed rule.

SUMMARY: The Commission requests comments on a channel substitution proposed by Mitts Telecasting Company (''Mitts''), the licensee of KXVO–DT, post-transition DTV channel 15, Omaha, Nebraska. Mitts requests the substitution of DTV channel 38 for post-transition DTV channel 15 at Omaha.

DATES: Comments must be filed on or before November 19, 2008, and reply comments on or before December 4, 2008.

ADDRESSES: Federal Communications Commission, Office of the Secretary, 445 12th Street, SW., Washington, DC 20554. In addition to filing comments with the FCC, interested parties should serve counsel for petitioner as follows: Michael Basile, Esq., Dow Lohnes, PLLC, 1200 New Hampshire Avenue, NW., Suite 800, Washington, DC 20036–6802.

FOR FURTHER INFORMATION CONTACT: Shaun A. Maher, *shaun.maher@fcc.gov*, Media Bureau, (202) 418–1600.

SUPPLEMENTARY INFORMATION: This is a synopsis of the Commission's Notice of Proposed Rule Making, MB Docket No. 08–115, adopted September 25, 2008, and released October 1, 2008. The full text of this document is available for public inspection and copying during normal business hours in the FCC's Reference Information Center at Portals II, CY–A257, 445 12th Street, SW., Washington, DC 20554. This document will also be available via ECFS (*http://www.fcc.gov/cgb/ecfs/*). (Documents will be available electronically in ASCII, Word 97, and/or Adobe Acrobat.) This document may be purchased from the Commission's duplicating contractor, Best Copy and Printing, Inc., 445 12th Street, SW., Room CY–B402, Washington, DC 20554, telephone 1–800–478–3160 or via e-mail *http://www.BCPIWEB.com*. To request this document in accessible formats (computer diskettes, large print, audio recording, and Braille), send an e-mail to *fcc504@fcc.gov* or call the Commission's Consumer and Governmental Affairs Bureau at (202) 418–0530 (voice), (202) 418–0432 (TTY). This document does not contain proposed information collection requirements subject to the Paperwork Reduction Act of 1995, Public Law 104–13. In addition, therefore, it does not contain any proposed information collection burden ''for small business concerns with fewer than 25 employees,'' pursuant to the Small Business Paperwork Relief Act of 2002, Public Law 107–198, *see* 44 U.S.C. 3506(c)(4).

Provisions of the Regulatory Flexibility Act of 1980 do not apply to this proceeding. Members of the public should note that from the time a Notice of Proposed Rule Making is issued until the matter is no longer subject to Commission consideration or court review, all *ex parte* contacts are prohibited in Commission proceedings, such as this one, which involve channel allotments. See 47 CFR 1.1204(b) for rules governing permissible *ex parte* contacts.

For information regarding proper filing procedures for comments, see 47 CFR 1.415 and 1.420.

List of Subjects in 47 CFR Part 73

Television, Television broadcasting.

For the reasons discussed in the preamble, the Federal Communications Commission proposes to amend 47 CFR part 73 as follows:

PART 73—RADIO BROADCAST SERVICES

1. The authority citation for part 73 continues to read as follows:

Authority: 47 U.S.C. 154, 303, 334, 336.

§ 73.622 [Amended]

2. Section 73.622(i), the Post-Transition Table of DTV Allotments under Nebraska, is amended by adding channel 38 and removing channel 15 at Omaha.

Federal Communications Commission.

Clay C. Pendarvis,

Associate Chief, Video Division, Media Bureau.

[FR Doc. E8–24924 Filed 10–17–08; 8:45 am]

BILLING CODE 6712–01–P

DEPARTMENT OF DEFENSE

Defense Acquisition Regulations System

48 CFR Parts 204 and 217

RIN 0750–AG05

Defense Federal Acquisition Regulation Supplement; Clarification of Central Contractor Registration and Procurement Instrument Identification Data Requirements (DFARS Case 2008–D010)

AGENCY: Defense Acquisition Regulations System, Department of Defense (DoD).

ACTION: Proposed rule with request for comments.

SUMMARY: DoD is proposing to amend the Defense Federal Acquisition Regulation Supplement (DFARS) to address requirements for ensuring the accuracy of contractor information in the Central Contractor Registration (CCR) database and in contract documents. Additionally, the proposed rule clarifies requirements for proper assignment of procurement instrument identification numbers.

DATES: Comments on the proposed rule should be submitted in writing to the address shown below on or before December 19, 2008, to be considered in the formation of the final rule.

ADDRESSES: You may submit comments, identified by DFARS Case 2008–D010, using any of the following methods:

Federal eRulemaking Portal: http://www.regulations.gov. Follow the instructions for submitting comments.

E-mail: dfars@osd.mil. Include DFARS Case 2008–D010 in the subject line of the message.

Fax: 703–602–7887.

Mail: Defense Acquisition Regulations System, Attn: Mr. Julian Thrash, OUSD (AT&L) DPAP (DARS), IMD 3D139, 3062 Defense Pentagon, Washington, DC 20301–3062.

Hand Delivery/Courier: Defense Acquisition Regulations System, Crystal Square 4, Suite 200A, 241 18th Street, Arlington, VA 22202–3402.

Comments received generally will be posted without change to *http://*

www.regulations.gov, including any personal information provided.

FOR FURTHER INFORMATION CONTACT: Mr. Julian Thrash, 703–602–0310.

SUPPLEMENTARY INFORMATION:

A. Background

This proposed rule reinforces requirements for use and maintenance of accurate contractor information, to permit proper identification and tracking of contract data through DoD's business processes. The proposed changes address requirements for—

- Ensuring that contract documents contain contractor information that is accurate and consistent with the information in the CCR database;
- Confirming the accuracy of a contractor's CCR information before exercising a contract option; and
- Proper assignment of procurement instrument identification numbers.

This rule was subject to Office of Management and Budget review under Executive Order 12866, dated September 30, 1993.

B. Regulatory Flexibility Act

DoD does not expect this proposed rule to have a significant economic impact on a substantial number of small entities within the meaning of the Regulatory Flexibility Act, 5 U.S.C. 601, *et seq.*, because the proposed rule reinforces existing requirements for accuracy of contract information. Therefore, DoD has not performed an initial regulatory flexibility analysis. DoD invites comments from small businesses and other interested parties. DoD also will consider comments from small entities concerning the affected DFARS subparts in accordance with 5 U.S.C. 610. Such comments should be submitted separately and should cite DFARS Case 2008–D010.

C. Paperwork Reduction Act

The Paperwork Reduction Act does not apply, because the proposed rule does not impose any information collection requirements that require the approval of the Office of Management and Budget under 44 U.S.C. 3501, *et seq.*

List of Subjects in 48 CFR Parts 204 and 217

Government procurement.

Michele P. Peterson,

Editor, Defense Acquisition Regulations System.

Therefore, DoD proposes to amend 48 CFR Parts 204 and 217 as follows:

1. The authority citation for 48 CFR Parts 204 and 217 continues to read as follows:

Authority: 41 U.S.C. 421 and 48 CFR Chapter 1.

PART 204—ADMINISTRATIVE MATTERS

2. Section 204.1103 is amended by redesignating paragraph (e) as paragraph (3), and by adding new paragraphs (1) and (2) to read as follows:

204.1103 Procedures.

(1) When making a determination to exercise an option, or at any other time, if the contractor is no longer registered in the Central Contractor Registration (CCR) database or if the information in the CCR database is no longer current or consistent with an applicable contract document—

(i) Confirm the accuracy of the information in the CCR database; and

(ii)(A) If the information in the CCR database is current, accurate, and complete, modify contract documents as necessary; or

(B) If the information in the CCR database is not current, accurate, and complete, exercise the option or issue the applicable contract modification as soon as practicable after the contractor has updated its registration information.

(2) On contract award documents, use the contractor's legal or ''doing business as'' name and address information as recorded in the CCR database at the time of award. Modifications for novations, name changes, or address changes shall reflect the information recorded in the CCR database at the time the modification is issued. See PGI 204.1103 for additional requirements relating to use of information in the CCR database.

* * * * *

3. Section 204.7003 is amended by revising paragraphs (a)(2), (a)(3)(iii), (a)(3)(viii), and (b) to read as follows:

204.7003 Basic PII number.

(a) * * *

(2) *Positions 7 through 8.* The seventh and eighth positions are the last two digits of the fiscal year in which the contract instrument is awarded.

(3) * * *

(iii) Contracts of all types except indefinite delivery contracts, facilities contracts, sales contracts, and contracts placed with or through other Government departments or agencies or against contracts placed by such departments or agencies outside the DoD. Do not use this code for contracts or agreements with provisions for orders or calls–C.

* * * * *

(viii) Agreements, including basic agreements and loan agreements, but excluding blanket purchase agreements, basic ordering agreements, and leases. Do not use this code for contracts or agreements with provisions for orders or calls–H.

* * * * *

(b) *Illustration of PII number.* The following illustrates a properly configured PII number—

Position	Contents
1-6	Identification of department/agency office
7-8	Last two digits of the fiscal year in which the contract instrument is awarded
9	Type of instrument
10-13	Four position serial number

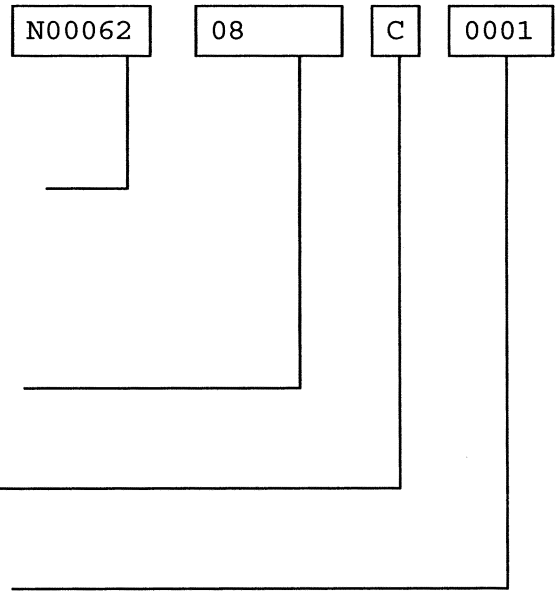

PART 217—SPECIAL CONTRACTING METHODS

4. Section 217.207 is added to read as follows:

217.207 Exercise of options.

(c) In addition to the requirements at FAR 17.207(c), exercise an option only after determining that the contractor's information in the Central Contractor Registration database is current, accurate, and complete and is accurately reflected in the contract document.

[FR Doc. E8–24486 Filed 10–17–08; 8:45 am]

BILLING CODE 5001–08–P

DEPARTMENT OF COMMERCE

National Oceanic and Atmospheric Administration

50 CFR Part 679

[Docket No. 080310410–8415–01]

RIN 0648–AW54

Fisheries of the Exclusive Economic Zone Off Alaska; Revisions to the Pollock Trip Limit Regulations in the Gulf of Alaska

AGENCY: National Marine Fisheries Service (NMFS), National Oceanic and Atmospheric Administration (NOAA), Commerce.

ACTION: Proposed rule; request for comments.

SUMMARY: NMFS proposes to revise pollock trip limit regulations to prohibit a catcher vessel from landing more than 300,000 lb (136 mt) of unprocessed pollock during a calendar day. NMFS also proposes to prohibit a catcher vessel from landing a cumulative amount of unprocessed pollock from any Gulf of Alaska (GOA) reporting area that exceeds 300,000 lb multiplied by the number of calendar days the pollock fishery is open to directed fishing in a season. The objective of this proposed rule is to prevent catcher vessels from circumventing the intent of current trip limit regulations when making deliveries of pollock. Amending the current trip limit regulation to limit legal opportunities for a vessel to exceed 300,000 lb of pollock caught in a day, would continue to disperse catches of pollock in a manner that is consistent with the intent of Steller sea lion protection measures in the GOA.

DATES: Written comments must be received by November 19, 2008.

ADDRESSES: Send comments to Sue Salveson, Assistant Regional Administrator, Sustainable Fisheries Division, Alaska Region, NMFS, Attn: Ellen Sebastian. You may submit comments, identified by "RIN 0648–AW54," by any one of the following methods:

- Electronic Submissions: Submit all electronic public comments via the Federal eRulemaking Portal website at *http://www.regulations.gov*.
- Mail: P. O. Box 21668, Juneau, AK 99802.
- Fax: (907) 586–7557.
- Hand delivery to the Federal Building: 709 West 9th Street, Room 420A, Juneau, AK.

All comments received are a part of the public record and will generally be posted to *http://www.regulations.gov* without change. All Personal Identifying Information (e.g., name, address) voluntarily submitted by the commenter may be publicly accessible. Do not submit Confidential Business Information or otherwise sensitive or protected information.

NMFS will accept anonymous comments (enter N/A in the required fields, if you wish to remain anonymous). Attachments to electronic comments will be accepted in Microsoft Word, Excel, WordPerfect, or Adobe portable document file (pdf) formats only.

Copies of the Categorical Exclusion (CE) and the Regulatory Impact Review/Initial Regulatory Flexibility Analysis (RIR/IRFA) prepared for this action are available by mail from NMFS, Alaska Region, P.O. Box 21668, Juneau, AK 99802–1668, Attn: Ellen Sebastian, Records Officer; in person at NMFS, Alaska Region, 709 West 9th Street, Room 420A, Juneau, AK; or via the Internet at the NMFS Alaska Region website at *http://alaskafisheries.noaa.gov*.

FOR FURTHER INFORMATION CONTACT: Jeff Hartman, 907–586–7442.

SUPPLEMENTARY INFORMATION:

The North Pacific Fishery Management Council (Council) prepared the Fishery Management Plan for Groundfish of the Gulf of Alaska (FMP), pursuant to the Magnuson–Stevens Fishery Conservation and Management Act (Magnuson–Stevens Act), 16 U.S.C. 1801 *et seq.* Regulations implementing the FMP appear at 50 CFR part 679. General regulations that pertain to U.S. fisheries appear at subpart H of 50 CFR part 600. NMFS manages the Gulf of Alaska (GOA) groundfish fisheries under the FMP. The FMP also authorizes the use of fishery

management measures to protect marine mammals, particularly for species that have been listed as endangered or threatened under the Endangered Species Act (ESA).

Regulations that establish current trip limits at § 679.7(b)(2), were implemented over several years in response to ESA consultations on Steller sea lions. The 1999 Steller sea lion protection measures, implemented by emergency interim rule (64 FR 3437, January 22, 1999), set trip limits for the Western and Central GOA. In 2001, NMFS issued a Biological Opinion (BiOp) that determined the groundfish fisheries managed under the protection measures were unlikely to jeopardize the continued existence of the western distinct population segment of Steller sea lions or adversely modify or destroy designated critical habitat. After the BiOp was issued, additional rulemaking implemented the current pollock trip limits across the entire GOA (67 FR 956, January 8, 2002 and 68 FR 204, January 2, 2003).

Pollock trip limits were intended to protect Steller sea lions in part by temporally dispersing the pollock fishery in the GOA, thus reducing competition for prey species between the fishery and Steller sea lions. Trip limits were to accomplish this by decreasing daily pollock catches in areas that were in close proximity to foraging Steller sea lions.

Trip limits regulate the amount of a species that may be landed by a vessel during a fishing trip. Trip limits often are specific to a management, regulatory or reporting area; fishing gear type or programs (such as exempted fishing or the Community Development Quota Program); and specific intervals of time during a year or season.

In developing the current trip limits, NMFS analyzed several alternative protection measures for temporally dispersing daily catches of pollock and concluded that the most effective and least burdensome approach was to limit pollock landings for a fishing trip and to set the trip limit at 300,000 lb. That amount would allow larger catcher vessels to fully utilize available space in a hold, while still reducing landings that were frequently exceeding 300,000 lb per day. NMFS based the limit on a trip because trawl fishing trips in the GOA were typically completed within a calendar day, and enforcement issues existed with applying a landing limit based on a daily or weekly interval. A daily limit was deemed to be impractical because at the time this option was considered in 2002, NMFS did not receive accurate data on groundfish catch by each vessel in a sufficient time to determine whether a daily catch limit had been reached to prevent further fishing on that same day. Catch data was reported by paper fish tickets, that could take several days to become available to NMFS. This delay also prevented the use of a weekly landing limit. Presently, when a landing occurs, it is quickly reported electronically and made available to NMFS allowing for a much shorter turn over for enforcement of daily landing limits.

Under the current regulations, pollock trip limits are to be apply to any catcher vessel that retains pollock in the GOA at any time during a fishing trip. Trawl catcher vessels are the only vessels that may fish in the directed pollock fishery and have sufficient catching and retention capacity to be affected by GOA pollock trip limits. For the purpose of calculating retained catch, a fishing trip is defined at § 679.2 as ending at the time that all fish or fish products are offloaded. An offload is a partial or complete landing of unprocessed catch from a catcher vessel to a processing plant or tender. A vessel operator would not be in compliance with current regulations for pollock trip limits if the amount of pollock retained onboard a vessel exceeded 300,000 lb during a fishing trip between offloads.

In 2005, the Council reviewed trawl landing data that demonstrated current pollock trip limits were not completely effective at restricting catches of pollock to 300,000 lb per day. The Council also received testimony from industry and a report from Council staff at their February 2005 meeting describing how some trawl catcher vessels were completing multiple trips in a day, or offloading to tenders to increase their daily pollock catch. If a vessel completed two fishing trips of 300,000 lb each in a day, or delivered 300,000 lb to a tender and landed 300,000 lb in the same a day to a processor, that vessel would be complying with regulation, while removing twice as much pollock. These practices were inconsistent with the Council's intention that only one trip per trawl vessel would be completed in a day, limiting the daily catch of pollock per vessel to 300,000 lb. Because the current trip limit is based on retention of pollock at any time during a fishing trip, the current regulations have allowed vessels to catch more than 300,000 lb in a day. Increasing fishing effort from these practices in 2005 also led to a 2,000 mt overage of the 5,000 mt seasonal pollock quota. The Council did not recommend any changes to pollock trip limits in 2005, but requested that industry voluntarily restrict catches to 300,000 lb per vessel, per day.

Between October and December of 2007 the Council again received testimony from vessel owners and reviewed updated catch data from NMFS. The Council concluded that the current pollock trip limit continued to be ineffective in dispersing catch of pollock among various reporting areas of the GOA. Representatives from the trawl catcher vessel sector reported that voluntary efforts to control pollock catches were not effective because vessels in the Western GOA were circumventing the intent of the trip limit by making more than one trip per calendar day, delivering more than 300,000 lb to a tender in a day, and towing cod ends to a tender that exceeded 300,000 lb at the point of landing. Catch data prepared by NMFS for the RIR/IRFA for this proposed rule confirmed that the trip limit regulation has not been fully effective because vessels in the GOA pollock fishery exceeded landings of 300,000 lb in a day, 241 times from 1999 to 2006.

In December 2007, the Council recommended adding two new provisions to the current GOA trip limit regulation to resolve this problem. The first provision would add a daily landing limit at § 679.7(b)(2)(ii) for pollock by prohibiting a trawl catcher vessel from landing more than 300,000 lb of unprocessed pollock during a calendar day. The second provision would add a seasonal landing limit at § 679.7(b)(2)(iii), that would prohibit a trawl catcher vessel from landing a cumulative amount of pollock that exceeds 300,000 lb multiplied by the number of calendar days that the directed fishery is open.

The daily landing limit would partially close the loophole in regulations that has allowed vessel operators to exceed the trip limit. The combination of a daily landing limit and a trip limit, however, could still allow some vessels to land well in excess of 300,000 lb of pollock per day.

Trawl vessels that transit only a short distance to a processor for delivering pollock could exceed a daily landing of 300,000 lb in a 24-hour season opening, because a single 24-hour season opening overlaps with 2 calendar days (a season opening always begins at noon), and because groundfish offloads may be extended across one or more calendar days. For example, if the pollock season were to open for a 24-hour period at 12 noon on Monday (day 1), a vessel could catch 300,000 lb of pollock and complete the offload of all catch before midnight on day 1. That vessel could begin to fish in the evening of day 1,

and start its second offload of 300,000 lb on Tuesday morning (day 2). Prior to the closing of the 24 hour period at 12 noon on Tuesday (day 2), the vessel could finish fishing a third trip for pollock, but return to port and complete its offload of pollock after 12 midnight on Wednesday (day 3). An offload can start on one calendar day, and end on a subsequent calendar day. Thus, in a 24-hour season opening with the proposed daily landing limit, a total of three calendar days multiplied by the daily landing limit of 300,000 lb of pollock could be delivered, for a total of 900,000 lb. Furthermore, in a 48-hour season opening, the proposed daily landing limit could allow a vessel to offload 4 x 300,000 lb, or 1,200,000 lb of pollock, and in a 72-hour opening, a vessel could offload 5 x 300,000 lb, or a total of 1,500,000 lb.

The seasonal landing limit would prohibit a vessel operator from landing an amount of pollock that exceeds the daily landing limit multiplied by the number of calendar days that occur during the time period the directed fishery is open. In the case of a 24-hour opening that extends across two calendar days (for example, from noon on July 1 to noon on July 2), the seasonal landing limit combined with the daily landing limit and trip limit would allow a vessel to land no more than the daily landing limit of 300,000 lb multiplied by two (the number of calendar days), for a total of 600,000 lb.

This proposed action would be consistent with the original intent of pollock trip limits to temporally and spatially disperse catches of pollock in the GOA. The daily landing limit portion of this proposed action would temporally disperse catches of pollock in the GOA by prohibiting operators of catcher vessels from exceeding 300,000 lb of pollock landed in a calendar day. The seasonal landing limit would temporally disperse pollock catches by constraining pollock vessels from exceeding an average daily catch of 300,000 lb of pollock over the period of a season, in a specific GOA regulatory area.

The proposed action would also reduce the chance of exceeding the pollock total allowable catch (TAC) or a seasonal allocation of the pollock TAC. Implementing both a daily and seasonal landing limit to prohibit landing daily amounts of pollock in excess of 600,000 lb in a 24 hour period may also slow down the overall rate of pollock catch in a season opening. Particularly in years and reporting areas of high pollock abundance, both the daily and seasonal landing limits would slow removals from large capacity vessels that have previously landed more than 1,000,000 lb per day.

This action would apply to vessels of all sizes and capacities in the GOA. For example, catcher vessels with larger capacity for catching and delivering pollock would no longer be able to bypass the original intent of pollock trip limits by practices such as delivering cod ends to a tender or processor, or making multiple landings per day. The RIR/IRFA for this action states that the number of times that larger trawl catcher vessels over 60 ft length overall (LOA) exceed a daily catch of 300,000 lb of pollock is consistently greater than small trawl catcher vessels (under 60 ft LOA), and the combination of day, trip, and seasonal landing limits included in this proposed action are more likely to reduce the amount of pollock caught per day for large than for small vessels. To compensate for constraining the amount of pollock that a catcher vessel may catch in a day, some of the 146 trawl vessels in the pollock fishery would require additional trips to catch the annual pollock TAC. The vessels that forego the amount of those landings in excess of 300,000 lb per day, would still remain available to all vessels to catch in additional fishing trips.

NMFS would not need additional data to calculate or monitor compliance for daily or seasonal pollock landing limits. NMFS would use landings data entered by each shoreside, mothership or inshore floating processor in eLandings at the time a vessel offloads pollock to monitor compliance with the trip, daily, and seasonal landing limits. If a vessel exceeded the daily pollock landing limit, the amount of the overage would be detected by NOAA Office for Law Enforcement during an audit of pollock landings recorded in eLandings. Because a landing record is recorded at the end of an offload, any amount exceeding 300,000 lb in a day would be identified during a routine audit of landing records. NMFS would also have eLandings data to monitor compliance with the seasonal landing limit, by comparing the 300,000 lb per calendar day limit multiplied by the number of calendar days in the season opening, with a given vessel's cumulative amount of pollock landings in that season opening.

The proposed action would apply to pollock caught in both the Federal waters of the Exclusive Economic Zone (EEZ) and the adjacent State of Alaska waters (State waters) by Federally permitted vessels. Regulations on the daily and seasonal landing limits at § 679.7(b)(2)(ii) and (iii) would apply to reporting areas defined at § 679.2 and depicted in Figure 3 to part 679, and thus, encompasses pollock groundfish fishing in State waters. If the regulation were administered only in Federal waters, the unintended result would likely be to shift pollock catches and effort to State waters.

A definition for ''calendar day'' would be added at § 679.2 to specify the interval of time in a day from 0001 hours Alaska local time to 2400 hours Alaska local time that a catcher vessel is prohibited from exceeding a daily pollock landing limit of 300,000 lb at § 679.7(b)(2)(ii). This definition also would be used to prohibit catcher vessels from landing a cumulative amount of unprocessed pollock harvested from any GOA reporting area during a directed fishery that exceeds the daily landing limit of 300,000 lb times the number of calendar days the directed fishery is open in a reporting area at § 679.7(b)(2)(iii).

Regulations governing the prohibitions on pollock trip limits at § 679.7(b)(2) would be moved to § 679.7(b)(2)(i) to reorganize § 679.7(b)(2). The current regulatory text at § 679.7(b)(2) that includes the phrase ''on board a vessel'' would be moved from the beginning of the sentence to the middle of the sentence in § 679.7(b)(2)(i). Technical changes to § 679.7(b)(2), recommended by NOAA Office for Law Enforcement, are proposed to clarify the regulation. These proposed amendments do not change the content or meaning of the regulation.

This rule also would revise Figure 3 to part 679, by increasing the accuracy of the geographic boundaries shown on the map and by changing the figure title from ''Gulf of Alaska Statistical and Reporting'' to read ''Gulf of Alaska Reporting Areas.'' The correction to the title is necessary because the Federal statistical areas are not visible in the figure or in the coordinates. A Federal statistical area is measured from 3 miles to 200 miles from shore. A Federal reporting area is measured from shore, including State waters, and extends to 200 miles from shore. The correction to the figure is necessary to more accurately depict these areas.

Classification

Pursuant to section 304(b)(1)(A) of the Magnuson–Stevens Act, the NMFS Assistant Administrator has determined that this proposed rule is consistent with the FMP, other provisions of the Magnuson–Stevens Act, and other applicable law, subject to further consideration after public comment.

This proposed rule has been determined to be not significant for purposes of Executive Order 12866.

An IRFA was prepared, as required by section 603 of the Regulatory Flexibility Act. The IRFA describes the economic impact this proposed rule, if adopted, would have on small entities. A description of the action, the reasons why it is being considered, and a statement of the objectives of and the legal basis for this action are included at the beginning of this section in the preamble and in the SUMMARY section of the preamble. A summary of the remainder of the IRFA follows. A copy of this analysis is available from NMFS (see **ADDRESSES**).

The directly regulated entities for this proposed action are the members of the commercial fishing industry that operate groundfish trawl catcher vessels in the GOA. Under a conservative application of the Small Business Administration criterion and the best available data, there were seven small entities out of a total of 148 vessels in 2005, and four out of a total of 146 vessels in 2006, which would be directly regulated by the proposed action. To provide these estimates, earnings from all Alaskan fisheries for 2005 and 2006 were matched with the vessels that participated in the GOA pollock fishery for that year.

In addition to the proposed alternative, the Council evaluated two other alternatives, which were rejected because they would be less effective than the preferred alternative to address the Council's problem statement. The no action alternative was rejected because it is not consistent with the intent of the original 1999 Steller sea lion protection measures. A second alternative considered and rejected was to limit the applicability of the preferred alternative to the Federal EEZ. Trawl pollock fisheries in the GOA are managed in the Federal EEZ by NMFS under the Gulf of Alaska Groundfish Management Plan, and within State waters by the State of Alaska. The alternative to apply daily and seasonal trip limits to only Federal EEZ would not encompass activities within State waters. As discussed in the RIR/IRFA for this action, the pollock resource and the fishery within the GOA occur both within Federal and State waters. Taking action in only one area of the GOA would limit the effectiveness of the action, since participants in the pollock trawl fishery would be free to move to the area without the trip limits. From 1999 to 2006, 60.6 percent of pollock was harvested in Federal waters and 39.4 percent in State waters. If this proposed action is implemented, Federal rules would be consistent with the corresponding action taken by the Alaska Board of Fisheries in November of 2007.

The analysis did not identify any Federal rules that would duplicate, overlap, or conflict with the proposed rule. This rule would impose no additional recordkeeping and reporting requirements on the effected vessels.

List of Subjects in 50 CFR Part 679

Alaska, Fisheries.

Dated: October 14, 2008.

Samuel D. Rauch III

Deputy Assistant Administrator for Regulatory Programs, National Marine Fisheries Service.

For the reasons set out in the preamble, 50 CFR part 679 is proposed to be amended as follows:

PART 679—FISHERIES OF THE EXCLUSIVE ECONOMIC ZONE OFF ALASKA

1. The authority citation for part 679 continues to read as follows:

Authority: 16 U.S.C. 773 *et seq.*; 1801 *et seq.*; 3631 *et seq.*; Pub. L.108–447.

2. In § 679.2 add a definition for ''Calendar day'' in alphabetical order to read as follows:

§ 679.2 Definitions.

* * * * *

Calendar day means a 24-hour period that starts at 0001 hours Alaska local time and ends at 2400 hours Alaska local time.

* * * * *

3. In § 679.7, revise paragraph (b)(2) to read as follows:

§ 679.7 Prohibitions.

* * * * *

(b) * * *

(2) *Catcher vessel harvest limit for pollock.* (i) Retain more than 300,000 lb (136 mt) of unprocessed pollock on board a catcher vessel at any time during a fishing trip as defined at § 679.2;

(ii) Land more than 300,000 lb (136 mt) of unprocessed pollock harvested in any GOA reporting area to any processor or tender vessel during a calendar day as defined at § 679.2; and

(iii) Land a cumulative amount of unprocessed pollock harvested from any GOA reporting area during a directed fishery that exceeds the amount in paragraph (b)(2)(ii) of this section multiplied by the number of calendar days that occur during the time period the directed fishery is open in that reporting area.

* * * * *

4. In Figure 3 to part 679, the figure heading and map are revised to read as follows:

Figure 3 to Part 679—Gulf of Alaska Reporting Areas

BILLING CODE 3510–22–S

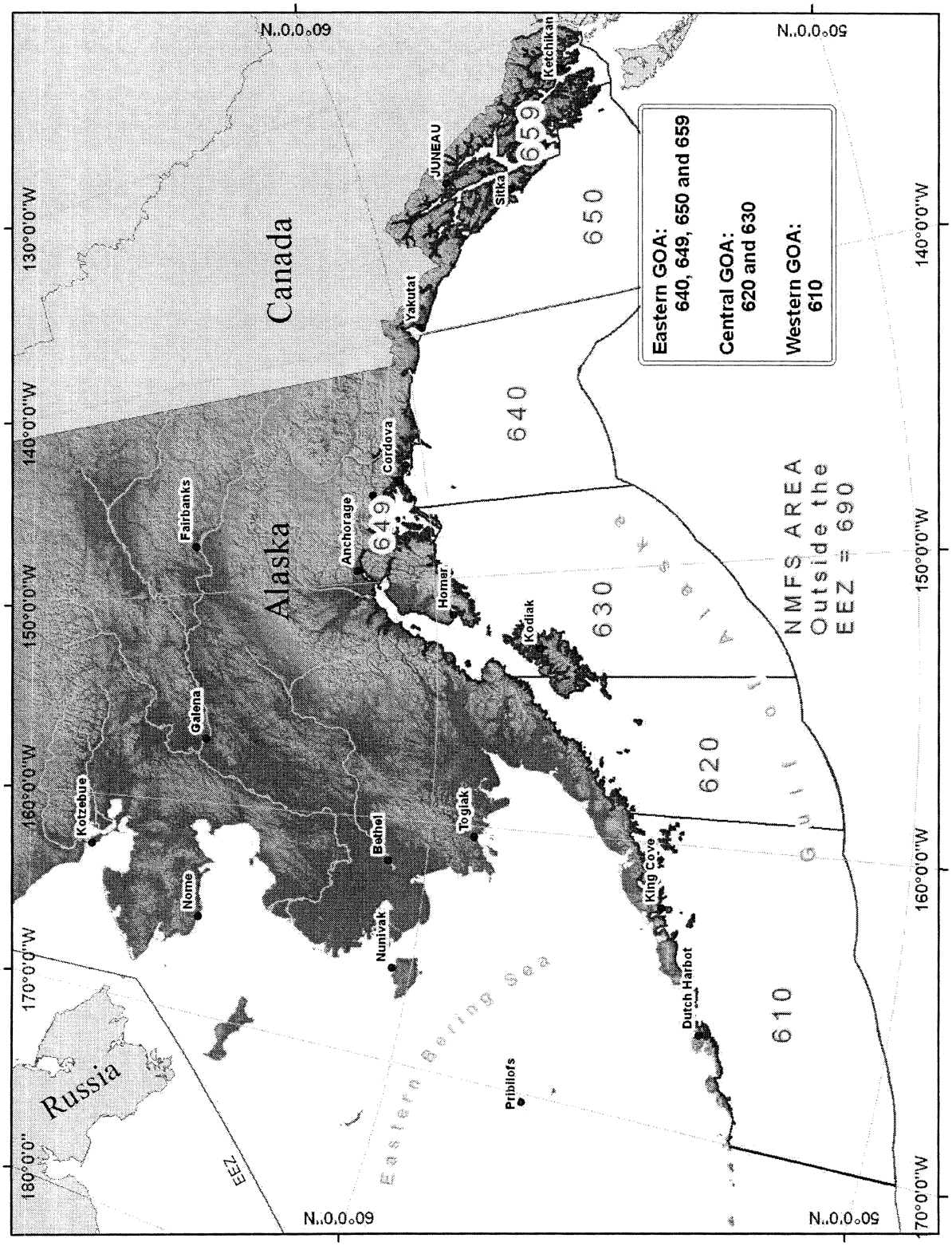

a. Map

* * * * *

[FR Doc. E8–24923 Filed 10–17–08; 8:45 am]

BILLING CODE 3510–22–C

Notices

Federal Register

Vol. 73, No. 203

Monday, October 20, 2008

This section of the FEDERAL REGISTER contains documents other than rules or proposed rules that are applicable to the public. Notices of hearings and investigations, committee meetings, agency decisions and rulings, delegations of authority, filing of petitions and applications and agency statements of organization and functions are examples of documents appearing in this section.

DEPARTMENT OF AGRICULTURE

Animal and Plant Health Inspection Service

[Docket No. APHIS–2008–0073]

Sirex Woodwasp; Availability of an Environmental Assessment and Finding of No Significant Impact

AGENCY: Animal and Plant Health Inspection Service, USDA.

ACTION: Notice.

SUMMARY: We are advising the public that a final environmental assessment and finding of no significant impact have been prepared by the Animal and Plant Health Inspection Service relative to a proposed biological control program for Sirex woodwasp. The environmental assessment documents our review and analysis of environmental impacts associated with the proposed biological control program. Based on its finding of no significant impact, the Animal and Plant Health Inspection Service has determined that an environmental impact statement need not be prepared.

FOR FURTHER INFORMATION CONTACT: Ms. Lynn Evans-Goldner, Staff Officer, Emergency and Domestic Programs, PPQ, APHIS, 4700 River Road Unit 137, Riverdale, MD 20737–1231; (301) 734–7228.

SUPPLEMENTARY INFORMATION:

Background

The Sirex woodwasp (*Sirex noctilio* Fabricius [Hymenoptera: Siricidae]) is a member of the horntail wasp family native to Europe, Asia, and northern Africa, where it is generally considered to be a secondary pest. In its native range, it attacks pines, such as Austrian (*Pinus nigra*), maritime (*P. pinaster*), and Scotch (*P. sylvestris*) pines, almost exclusively. While stressed trees are most at risk, Sirex woodwasp can also attack and kill healthy trees. Adult wasps are strong fliers and can naturally disperse up to 25 miles, especially when aided by strong winds. In addition, the artificial spread of Sirex woodwasp can occur through the movement of infested host plant materials such as pine logs. Because Sirex woodwasp inhabits the sapwood and larvae tunnel deep into host trees, this pest is difficult to detect through visual inspection.

Sirex woodwasp can complete its lifecycle on many pine species, which are the pest's primary hosts. Thus far, in North America, jack pine (*P. banksiana*), red pine (*P. resinosa*), Scotch pine (*P. sylvestris*), and white pine (*P. strobus*) have served as hosts for Sirex woodwasp. The first detection of a breeding population of the Sirex woodwasp in the United States occurred in 2004 in Oswego County, NY. As a result of ongoing surveys conducted by State and Federal officials since 2005, the Sirex woodwasp has been detected in additional counties in Michigan, New York, Pennsylvania, and Vermont.

In an environmental assessment prepared in March 2007, APHIS considered a program to control Sirex woodwasp in New York and Pennsylvania, the only States where Sirex woodwasp had been detected at that time. The environmental assessment evaluated four alternatives: No action, a quarantine program, a biological control program, and a combination of quarantine and biological control (preferred action) in New York and Pennsylvania. APHIS issued a finding of no significant impact on June 21, 2007, which determined that the proposed program (including quarantine and biological control) identified as the preferred action would not have a significant impact on the quality of the human environment in those States.

Since that time, Sirex woodwasp has been detected in additional States, and APHIS would like to implement a biological control program in those States. If the pest is detected in other States in the future, APHIS would also want to implement a biological control program in those States, as well. APHIS therefore revised the environmental assessment in order to consider the potential effects on the quality of the human environment from implementing a program for control of Sirex woodwasp in all of the currently infested States and in the surrounding States where Sirex woodwasp would most likely be detected if it were to spread.

On July 21, 2008, we published in the **Federal Register** (73 FR 42313–42314, Docket No. APHIS–2008–0073) a notice [11] in which we announced the availability for public review and comment of the revised environmental assessment, entitled ''Proposed Program for the Control of the Woodwasp *Sirex noctilio* F. (Hymenoptera: Siricidae) in the Northeastern United States'' (May 2008). APHIS received 18 comments on the revised environmental assessment. Of these, 17 were outside the scope of the environmental assessment; instead, they pertained to movement restrictions and economic impacts that may occur if APHIS were to impose *Sirex*-related movement conditions.

The one comment that was relevant to the environmental assessment questioned the efficacy of the proposed environmental release of the parasitic nematode *Beddingia siricidicola* and is addressed in the August 2008 finding of no significant impact.

In this document, we are advising the public of our decision and finding of no significant impact regarding a proposed program for the control of Sirex woodwasp. This decision is based upon the updated environmental assessment, entitled ''Proposed Program for the Control of the Woodwasp *Sirex noctilio* F. (Hymenoptera: Siricidae) in the Northeastern United States'' (August 2008).

The final environmental assessment and finding of no significant impact may be viewed on the Regulations.gov Web site or in our reading room (see **ADDRESSES** above for a link to Regulations.gov and information on the location and hours of the reading room). You may request paper copies of the environmental assessment and finding of no significant impact by calling or writing to the person listed under **FOR FURTHER INFORMATION CONTACT**. Please refer to the title of the environmental assessment when requesting copies.

The environmental assessment has been prepared in accordance with: (1) The National Environmental Policy Act of 1969 (NEPA), as amended (42 U.S.C. 4321 *et seq.*), (2) regulations of the

[11] To view the notice, the environmental assessment, the finding of no significant impact, and the comments we received, go to *http://www.regulations.gov/fdmspublic/component/main?main=DocketDetail&d=APHIS-2008-*

Council on Environmental Quality for implementing the procedural provisions of NEPA (40 CFR parts 1500–1508), (3) USDA regulations implementing NEPA (7 CFR part 1), and (4) APHIS' NEPA Implementing Procedures (7 CFR part 372).

Done in Washington, DC, this 14th day of October 2008.

Kevin Shea,

Acting Administrator, Animal and Plant Health Inspection Service.

[FR Doc. E8–24889 Filed 10–17–08; 8:45 am]

BILLING CODE 3410–34–P

BROADCASTING BOARD OF GOVERNORS

Sunshine Act Meeting

DATE AND TIME: Wednesday, October 22, 2008, 1:30 p.m.–5:30 p.m.

PLACE: Cohen Building, Room 3321, 330 Independence Ave., SW., Washington, DC 20237.

CLOSED MEETING: The members of the Broadcasting Board of Governors (BBG) will meet in closed session to review and discuss a number of issues relating to U.S. Government-funded non-military international broadcasting. They will address internal procedural, budgetary, and personnel issues, as well as sensitive foreign policy issues relating to potential options in the U.S. international broadcasting field. This meeting is closed because if open it likely would either disclose matters that would be properly classified to be kept secret in the interest of foreign policy under the appropriate executive order (5 U.S.C. 552b.(c)(1)) or would disclose information the premature disclosure of which would be likely to significantly frustrate implementation of a proposed agency action. (5 U.S.C. 552b.(c)(9)(B)) In addition, part of the discussion will relate solely to the internal personnel and organizational issues of the BBG or the International Broadcasting Bureau. (5 U.S.C. 552b.(c)(2) and (6))

CONTACT PERSON FOR MORE INFORMATION: Persons interested in obtaining more information should contact Timi Nickerson Kenealy at (202) 203–4545.

Dated: October 15, 2008.

Timi Nickerson Kenealy,

Acting Legal Counsel.

[FR Doc. E8–24976 Filed 10–16–08; 4:15 pm]

BILLING CODE 8610–01–P

DEPARTMENT OF COMMERCE

Submission for OMB Review; Comment Request

The Department of Commerce will submit to the Office of Management and Budget (OMB) for clearance the following proposal for collection of information under the provisions of the Paperwork Reduction Act (44 U.S.C. chapter 35).

Agency: U.S. Census Bureau.

Title: Generic Clearance for 2010 Census Communications Campaign Testing Activities.

Form Number(s): None.

OMB Control Number: None.

Type of Request: New collection.

Burden Hours: 13,000.

Number of Respondents: 8,000.

Average Hours per Response: 1 hour and 38 minutes.

Needs and Uses: Every ten years, the U.S. Census Bureau is congressionally mandated to count everyone (citizens and non-citizens) residing in the United States. An accurate count is critical for many reasons including but not limited to:

- Congressional reapportionment;
- Redistricting congressional boundaries;
- Community planning; and
- Distribution of public funds and program development.

To facilitate the data collection effort for the 2010 Census, the Census Bureau is developing an Integrated Communications Campaign (ICC). The role of the ICC is to increase public awareness and motivate people to respond to the census promptly, saving millions of taxpayer dollars. The specific objectives of the ICC are:

- Increase mail response;
- Improve cooperation with enumerators; and
- Improve overall accuracy and reduce differential undercount.

From 1970—the first year questionnaires were mailed to households—to 1990, the mail response rate declined from 78 percent to 65 percent. To help halt the declining mail response rate, the Census Bureau ran a paid advertising campaign to support data collection activities for the 2000 Census. The resulting mail response rate in 2000 was 67 percent—two percentage points above 1990. This campaign was considered a very successful initiative and one of several reasons cited with helping to reverse declining mail response rates.

In order to support the aforementioned objectives, the ICC will be based on behavioral learning during the 2000 Census as well as information that will come from new research. All messaging and communications that will be developed as part of the 2010 Census integrated communications will be supported by primary research among a wide range of target audiences. The research will serve to support campaign direction and decisions made at each stage of message and communications development, such research commenced in late 2007 and in 2008 (covered as part of Generic Clearance OMB Control No. 0607–0725). That research covered the development of a unifying idea (Only You Can Make the Census Ours) and creative expression (It's in Our Hands), which will be reflected across all communications under the campaign.

This research provided valuable guidance for the next stages of development. Going forward, additional research must be conducted in order to support these next stages. At this time, the Census Bureau is seeking a generic clearance for conducting research to gain respondent feedback to specific messaging, a variety of creative executions, and to track the campaign progress once launched. This will enable the Census Bureau to continue providing support for research activities as part of the Census 2010 ICC.

The proposed quantitative and qualitative methods are: One-on-one interviews; focus groups; online quantitative surveys; telephone quantitative surveys; and in-person quantitative surveys.

Since the types of studies included under the umbrella of the clearance are so varied, it is impossible to specify at this point what kinds of activities would be involved in any particular activity. But at a minimum, Census expect to use in-person group interviews, focus groups, usability tests, and tracking surveys.

OMB will be provided a copy of questionnaires, moderator guides, creative materials, and debriefing materials in advance of any testing activity. Depending on the stage of creative development, this may be rough mock-ups of printed materials or story boards. A brief description of the planned field activity will also be provided. The Census Bureau will send OMB an annual report at the end of each year summarizing the number of hours used, as well as the nature and results of the activities completed under this clearance.

The information collected in this program will be used by staff from the Census Bureau and its contractors to evaluate and improve the quality of the communications, advertising, and messages that are produced as part of

the campaign. None of the data collected under this clearance will be published for its own sake.

Data from the research will be included in research reports prepared for sponsors inside and outside of the Census Bureau. The results may also be prepared for presentations before Census advisory committees, at professional meetings or in publications in professional journals.

Affected Public: Individuals or households.

Frequency: On occasion.

Respondent's Obligation: Voluntary.

Legal Authority: Title 13 U.S.C. Sections 141 and 193.

OMB Desk Officer: Brian Harris-Kojetin, (202) 395–7314.

Copies of the above information collection proposal can be obtained by calling or writing Diana Hynek, Departmental Paperwork Clearance Officer, (202) 482–0266, Department of Commerce, Room 6625, 14th and Constitution Avenue, NW., Washington, DC 20230 (or via the Internet at *dhynek@doc.gov*).

Written comments and recommendations for the proposed information collection should be sent within 30 days of publication of this notice to Brian Harris-Kojetin, OMB Desk Officer either by fax (202–395–7245) or e-mail (*bharrisk@omb.eop.gov*).

Dated: October 15, 2008.

Gwellnar Banks,

Management Analyst, Office of the Chief Information Officer.

[FR Doc. E8–24915 Filed 10–17–08; 8:45 am]

BILLING CODE 3510–07–P

DEPARTMENT OF COMMERCE

Foreign–Trade Zones Board

Order No. 1581

Approval for Expansion of Subzone 50I, Ultramar Inc. (Oil Refinery), Wilmington, California

Pursuant to its authority under the Foreign–Trade Zones Act of June 18, 1934, as amended (19 U.S.C. 81a–81u), the Foreign–Trade Zones Board (the Board) adopts the following Order:

Whereas, the Port of Long Beach, grantee of Foreign–Trade Zone 50, has requested authority to expand the subzone and the scope of manufacturing activity conducted under zone procedures within the oil refinery subzone of Valero Energy Corporation subsidiary Ultramar Inc., Subzone 50I, located in Wilmington, California (FTZ Docket 17–2008, filed 3/21/2008);

Whereas, notice inviting public comment has been given in the **Federal Register** (73 FR 17314–17315, 4/1/2008);

Whereas, the Board adopts the findings and recommendations of the examiner's report, and finds that the requirements of the FTZ Act and Board's regulations would be satisfied, and that approval of the application would be in the public interest if approval is subject to the conditions listed below;

Now, therefore, the Board hereby orders:

The application to expand the scope of manufacturing authority under zone procedures within Subzone 50I, is approved, subject to the FTZ Act and the Board's regulations, including § 400.28, and subject to the following conditions:

1. Foreign status (19 CFR §§ 146.41, 146.42) products consumed as fuel for the refinery shall be subject to the applicable duty rate.
2. Privileged foreign status (19 CFR § 146.41) shall be elected on all foreign merchandise admitted to the subzone, except that non–privileged foreign (NPF) status (19 CFR § 146.42) may be elected on refinery inputs covered under HTSUS Subheadings #2709.00.10, #2709.00.20, #2710.11.25, #2710.11.45, #2710.19.05, #2710.19.10, #2710.19.45, #2710.91.00, #2710.99.05, #2710.99.10, #2710.99.16, #2710.99.21 and #2710.99.45 which are used in the production of:

- petrochemical feedstocks and refinery by–products (examiner's report, Appendix ''C'');
- products for export;
- and, products eligible for entry under HTSUS # 9808.00.30 and # 9808.00.40 (U.S. Government purchases).

Signed at Washington, DC, this 7th day of October 2008.

David M. Spooner,

Assistant Secretary of Commerce for Import Administration, Alternate Chairman, Foreign–Trade Zones Board.

Attest:

Andrew McGilvray,

Executive Secretary.

[FR Doc. E8–24901 Filed 10–17–08; 8:45 am]

BILLING CODE 3510–DS–S

DEPARTMENT OF COMMERCE

Bureau of Industry and Security

Announcement of Performance Review Board Members

AGENCY: Bureau of Industry and Security, Department of Commerce.

ACTION: Notice of Performance Review Board Membership.

SUMMARY: 5 CFR 430.310 requires agencies to publish notice of Performance Review Board appointees in the **Federal Register** before their service begins. This notice announces the names of new and existing members of the Bureau of Industry and Security's Performance Review Board.

DATES: *Effective Date:* The effective date of service of appointees to the Bureau of Industry and Security Performance Review Board (BIS PRB) is upon publication of this notice. The term of the new members of the BIS PRB will expire after two years in December 31, 2010.

FOR FURTHER INFORMATION CONTACT: Heidi K. Smith, Department of Commerce Human Resources Operations Center (DOCHROC), Office of Executive Resources Operations, 14th and Constitution Avenue, NW., Room 5015A, Washington, DC 20230, at (202) 482–1261.

SUPPLEMENTARY INFORMATION: The purpose of the Performance Review Board is to review and make recommendations to the appointing authority on performance management issues such as appraisals, bonuses, pay level increases, and Presidential Rank Awards for members of the Senior Executive Service. The Under Secretary for Industry and Security, Mario Mancuso, has named the following members of the Bureau of Industry and Security Performance Review Board:

1. Daniel O. Hill, Deputy Under Secretary for Industry and Security (New).

2. Matthew S. Borman, Deputy Assistant Secretary for Export Administration (New).

3. Kevin Delli-Colli, Deputy Assistant Secretary for Export Enforcement (New).

4. Gay G. Shrum, Director of Administration.

5. John J. Phelan, III, Director for Management and Organization (Outside Reviewer).

Dated: October 14, 2008.

Deborah A. Martin,

Director, Office of Executive Resources Operations, Department of Commerce Human Resources Operations Center.

[FR Doc. E8–24831 Filed 10–17–08; 8:45 am]

BILLING CODE 3510–BS–P

DEPARTMENT OF COMMERCE

International Trade Administration

Announcement of Performance Review Board Members

AGENCY: International Trade Administration, Department of Commerce.

ACTION: Notice of Performance Review Board Membership.

SUMMARY: 5 CFR 430.310 requires agencies to publish notice of Performance Review Board appointees in the **Federal Register** before their service begins. This notice announces the names of new and existing members of the International Trade Administration's Performance Review Board.

DATES: *Effective Date:* The effective date of service of appointees to the International Trade Administration Performance Review Board is upon publication of this notice.

FOR FURTHER INFORMATION CONTACT: Heidi K. Smith, Department of Commerce Human Resources Operations Center (DOCHROC), Office of Executive Resources Operations, 14th and Constitution Avenue, NW., Room 5015A, Washington, DC 20230, at (202) 482–1261.

SUPPLEMENTARY INFORMATION: The purpose of the Performance Review Board is to review and make recommendations to the appointing authority on performance management issues such as appraisals, bonuses, pay level increases, and Presidential Rank Awards for members of the Senior Executive Service. The term of the new members of the ITA PRB will expire after two years in December 31, 2010. The Under Secretary for International Trade, Christopher A. Padilla, has named the following members of the International Trade Administration Performance Review Board:

1. Patricia A. Sefcik, Senior Director for Manufacturing, Chairperson (new 2-year term).
2. Susan H. Kuhbach, Senior Director, Import Administration (new).
3. Walter M. Bastian, Deputy Assistant Secretary for Western Hemisphere, Market Access and Compliance (new).
4. Stacey B. Silva, Executive Director for Trade Promotion and Outreach.
5. Ronald A. Glaser, Deputy Director for Administration and Director for Strategic Resources (At-Large).
6. Jamie P. Estrada, Deputy Assistant Secretary for Manufacturing and Services (At-Large).
7. Roxie J. Jones, Office of General Counsel, Department of Commerce (Outside Reviewer).

Dated: October 14, 2008.

Deborah A. Martin,

Director, Office of Executive Resources Operations, Department of Commerce Human Resources Operations Center.

[FR Doc. E8–24834 Filed 10–17–08; 8:45 am]

BILLING CODE 3510–BS–P

DEPARTMENT OF COMMERCE

International Trade Administration

[A–570–898]

Amended Final Results of Antidumping Duty Administrative Review: Chlorinated Isocyanurates from the People's Republic of China

AGENCY: Import Administration, International Trade Administration, Department of Commerce.

EFFECTIVE DATE: October 20, 2008.

SUMMARY: On September 10, 2008, the Department of Commerce (''Department'') published in the **Federal Register** the final results of the second administrative review of the antidumping duty order on chlorinated isocyanurates from the People's Republic of China (''PRC''). *See Chlorinated Isocyanurates from the People's Republic of China: Final Results of Antidumping Duty Administrative Review*, 73 FR 52645 (September 10, 2008) (''*Final Results*''), and accompanying Issues and Decision Memorandum. The period of review covered is June 1, 2006, through May 31, 2007. We are amending our *Final Results* to correct ministerial errors made in the calculation of the antidumping duty margins of Hebei Jiheng Chemical Company Ltd. (''Jiheng'') and Nanning Chemical Industry Co., Ltd. (''Nanning'') pursuant to section 751(h) of the Tariff Act of 1930, as amended (''the Act'').

FOR FURTHER INFORMATION CONTACT: Jennifer Moats or Charles Riggle, AD/CVD Operations, Office 8, Import Administration, International Trade Administration, U.S. Department of Commerce, 14th Street and Constitution Avenue, NW, Washington, DC 20230; telephone: (202) 482–5047 or (202) 482–0650, respectively.

SUPPLEMENTARY INFORMATION: On September 10, 2008, Clearon Corporation and Occidental Chemical Corporation (''Petitioners''), Petitioners in the underlying investigation, filed timely ministerial error allegations with respect to the Department's antidumping duty margin calculation in the *Final Results*.

Scope of the Order

The products covered by this order are chlorinated isocyanurates, as described below: Chlorinated isocyanurates are derivatives of cyanuric acid, described as chlorinated s–triazine triones. There are three primary chemical compositions of chlorinated isocyanurates: (1) trichloroisocyanuric acid ($Cl_3(NCO)_3$), (2) sodium dichloroisocyanurate (dihydrate) ($NaCl_2(NCO)_3 \bullet 2H_2O$), and (3) sodium dichloroisocyanurate (anhydrous) ($NaCl_2(NCO)_3$). Chlorinated isocyanurates are available in powder, granular, and tableted forms. This order covers all chlorinated isocyanurates.

Chlorinated isocyanurates are currently classifiable under subheadings 2933.69.6015, 2933.69.6021, 2933.69.6050, 3808.40.50, 3808.50.40 and 3808.94.50.00 of the Harmonized Tariff Schedule of the United States (''HTSUS''). The tariff classification 2933.69.6015 covers sodium dichloroisocyanurates (anhydrous and dehydrate forms) and trichloroisocyanuric acid. The tariff classifications 2933.69.6021 and 2933.69.6050 represent basket categories that include chlorinated isocyanurates and other compounds including an unfused triazine ring. Although the HTSUS subheadings are provided for convenience and customs purposes, the written description of the scope of this order is dispositive.

Ministerial Errors

A ministerial error as defined in section 751(h) of the Act ''includes errors in addition, subtraction, or other arithmetic function, clerical errors resulting from inaccurate copying, duplication, or the like, and any other type of unintentional error which the Secretary considers ministerial.'' *See* also 19 CFR 351.224(f).

After analyzing Petitioners comments, we have determined, in accordance with 19 CFR 351.224(e), that ministerial errors existed in certain calculations for Jiheng and Nanning in the *Final Results*. Correction of these errors results in a change to Jiheng's and Nanning's final antidumping duty margins. The rate for the PRC–wide entity remains unchanged. For a detailed discussion of these ministerial errors, as well as the Department's analysis, *see* Memorandum to Wendy J. Frankel, Director, AD/CVD Operations, Office 8, from Jennifer Moats, Senior International Trade Analyst, through Charles Riggle, Program Manager, AD/CVD Operations, Office 8: Analysis of

Ministerial Error Allegations in the Final Results for Antidumping Duty Review on Chlorinated Isocyanurates from the People's Republic of China, dated concurrently with this notice. Therefore, in accordance with section 751(h) of the Act and 19 CFR 351.224(e), we are amending the *Final Results* of the administrative review of chlorinated isocyanurates from the PRC. The revised final weighted–average margins for Jiheng and Nanning are as follows:

Exporter/Manufacturer	Original Weighted–Average Margin Percentage	Amended Weighted–Average Margin Percentage
Jiheng	0.80	0.90
Nanning	53.67	54.86

Assessment Rates

The Department intends to issue assessment instructions to U.S. Customs and Border Protection (''CBP'') 15 days after the date of publication of these amended final results of review. In accordance with 19 CFR 351.212(b)(1), we have calculated importer–specific assessment rates for merchandise subject to this review.

Cash Deposit Requirements

The following deposit requirements will be effective retroactively on any entries made on or after September 10, 2008, the date of publication of the *Final Results*, for all shipments of subject merchandise entered, or withdrawn from warehouse, for consumption as provided by section 751(a)(2)(C) of the Act: (1) for subject merchandise exported by Jiheng, the cash deposit rate will be 0.90 percent and for subject merchandise exported by Nanning, the cash deposit rate will be 54.86 percent; (2) for previously reviewed or investigated exporters not listed above that have separate rates, the cash deposit rate will continue to be the exporter–specific rate published for the most recent period; (3) for all PRC exporters of subject merchandise, which have not been found to be entitled to a separate rate, the cash deposit rate will be the PRC–wide rate of 285.63 percent; and (4) for all non–PRC exporters of subject merchandise that have not received their own rate, the cash deposit rate will be the rate applicable to the PRC exporter that supplied that non–PRC exporter. These deposit requirements shall remain in effect until further notice.

Notification of Interested Parties

This notice also serves as a final reminder to importers of their responsibility under 19 CFR 351.402(f)(2) to file a certificate regarding the reimbursement of antidumping duties prior to liquidation of the relevant entries during this review period. Failure to comply with this requirement could result in the Secretary's presumption that reimbursement of the antidumping duties occurred and the subsequent assessment of double antidumping duties. This notice also serves as a reminder to parties subject to administrative protective orders (''APOs'') of their responsibility concerning the return or destruction of proprietary information disclosed under APO in accordance with 19 CFR 351.305, which continues to govern business proprietary information in this segment of the proceeding. Timely written notification of the return/destruction of APO materials or conversion to judicial protective order is hereby requested. Failure to comply with the regulations and terms of an APO is a violation that is subject to sanction.

We are issuing and publishing these amended final results of review and notice in accordance with sections 751(a) and 777(i) of the Act.

Dated: October 10, 2008.

David M. Spooner,

Assistant Secretary for Import Administration.

[FR Doc. E8–24902 Filed 10–17–08; 8:45 am]

BILLING CODE 3510–DS–S

DEPARTMENT OF COMMERCE

International Trade Administration

[A–570–849]

Certain Cut–to-Length Carbon Steel Plate from the People's Republic of China: Initiation of Antidumping Circumvention Inquiry

AGENCY: Import Administration, International Trade Administration, Department of Commerce.

SUMMARY: In response to a request from Nucor Corporation, SSAB N.A.D., Evraz Claymont Steel, and Evraz Oregon Steel Mills, domestic interested parties in the above–mentioned proceeding (collectively ''certain domestic producers''), the Department of Commerce (the Department) is initiating an antidumping circumvention inquiry pursuant to section 781(c) of the Tariff Act of 1930, as amended (the Act). This inquiry will determine whether the inclusion of 0.0008 percent or more, by weight, of boron in certain steel plates results in those steel plates having been ''altered in form or appearance in minor respects'' from the subject merchandise such that the plates can be considered subject to the antidumping duty order on certain cut–to-length carbon steel plate from the People's Republic of China (PRC) under the minor alterations provision. See Suspension Agreement on Certain Cut–to-Length Carbon Steel Plate From the People's Republic of China; Termination of Suspension Agreement and Notice of Antidumping Duty Order, 68 FR 60081 (October 21, 2003).

EFFECTIVE DATE: October 20, 20088.

FOR FURTHER INFORMATION CONTACT: Steve Bezirganian or Robert James, AD/CVD Operations, Office 7, Import Administration, International Trade Administration, U.S. Department of Commerce, 14th Street and Constitution Avenue, NW, Washington, DC, 20230; telephone: (202) 482–1131 or (202) 482–0649, respectively.

SUPPLEMENTARY INFORMATION:

Background

On August 13, 2008, certain domestic producers requested that the Department make a final circumvention ruling within 45 days pursuant to section 781(d) of the Act, with respect to certain steel plates containing 0.0008 percent or more, by weight, of boron. Those parties urged the Department to find that such plates are circumventing the antidumping duty order on certain cut–to-length carbon steel plate from the PRC by virtue of minor alterations to subject merchandise. *See* section 781(c) of the Act.

Certain domestic producers cite U.S. trade data indicating that imports from the PRC of merchandise classified under Harmonized Tariff Schedule of the United States (HTSUS) numbers that include subject merchandise declined after the order went into effect. *See* certain domestic producers' August 13, 2008, submission (August 13 submission) at 15 and Exhibit 5. Certain domestic producers also note that during the same period, imports from the PRC of merchandise classified under the HTSUS as putatively non–subject

alloy steel rose substantially. *See id.* As a result, certain domestic producers note, a single alloy HTSUS number accounted for nearly 95 percent of the total non–alloy and alloy steel plate imported from the PRC in the most recent quarter for which data are available (April 2008 through June 2008). *See id.*

Certain domestic producers suggest this trend reflects, at least in part, a move by PRC producers and exporters to add small amounts of boron during the steel production process. *See id.*, at 5. They note that steel consisting of 0.0008 percent or more boron is classified for U.S. Customs purposes as alloy steel. *See id.* Such ''alloy'' steel products are not classified in HTSUS numbers listed with the description of the scope of the order. Certain domestic producers state boron is being added in the steel production process to avoid antidumping duties. *See id.*, at 10.

Certain domestic producers assert that physical characteristics, expectations of ultimate users, uses, channels of marketing, and costs are unaffected by the inclusion of such small quantities of boron. *See id.*, at 10–13. Certain domestic producers also refer to evidence of a specific offer made for such PRC steel that contained what they described as language indicating a conscious attempt to avoid classification of the merchandise under the order. *See id.*, at 10 and Exhibit 1. Certain domestic producers suggest the shift to the ostensibly ''alloy'' plate products indicates an attempt to conceal Chinese producers' true interest in re–entering the U.S. market in the context of the recently initiated sunset review of the order. *See id.*, at 14–15. In addition, certain domestic producers note the Department ruled that circumvention had taken place under another cut–to-length carbon steel plate order as a result of such boron additions. *See id.*, at 9 (citing *Final Determination of Circumvention of the Antidumping Order: Cut–to-Length Carbon Steel Plate From Canada*, 66 FR 7617 (January 24, 2001) (*Final Canada Plate Determination*)). Finally, certain domestic producers reference media reports that the PRC government is taking steps to curb efforts by PRC exporters to evade PRC export taxes through boron–inclusion resulting in steel plate products being classified as ''alloy'' steel. *See id.*, at 10 and Exhibit 2.

On August 26, 2008, the Department identified various issues in certain domestic producers' August 13, 2008, submission that required clarification. Certain domestic producers provided a response on September 10, 2008 (September 10, 2008, submission). Certain domestic producers identified publicly the parties they claimed were involved with circumvention: Tianjin Iron and Steel Co., Ltd. (Tianjin) and Toyota Tsusho America (Toyota Tsusho). *See* September 10, 2008, submission, at 3. Certain domestic producers also clarified the proposed scope of the antidumping circumvention inquiry. Specifically, they proposed that manufacturers and exporters of certain merchandise containing boron at alloy steel levels, but otherwise meeting the description of the scope of the antidumping duty order, be required to demonstrate that the merchandise had certain additional chemical and testing result properties for such merchandise to be considered not subject to the antidumping duty order. *See id.*, at 7; *see also* ''Scope of the Minor Alterations Antidumping Circumvention Proceeding'' section below. Certain domestic producers provided mill test certificate information to support its claims. *See* September 13, 2008, submission, at Exhibits S–2 and S–5. Certain domestic producers also provided additional information and clarification, including, for example, discussion of the potential impact of boron on the hardenability of steels, and how hardenability is measured. *See* September 10, 2008, submission at 5–9 and Exhibit S–4.

On September 19, 2008, the Department obtained additional information through a telephone conversation with individuals speaking on behalf of one of the domestic producers. These individuals clarified that the request did cover products with any boron level greater than or equal to 0.0008 percent. Also, the request for antidumping circumvention inquiry was limited to merchandise produced by Tianjin and/or imported by Toyota Tsusho. *See* the September 30, 2008, telephone memorandum from Steve Bezirganian to the File (September 30, 2008, memorandum). In a submission filed on October 1, 2008 (October 1, 2008, submission), certain domestic producers confirmed the accuracy of the information recorded in September 30, 2008, memorandum. *See* October 1, 2008, submission at 2. In that filing, certain domestic producers also provided additional evidence of offers for plate containing added boron and involving Tianjin and Toyota Tsusho. *See* October 1, 2008, submission at 1–2 and Exhibit 1.

Scope of Order

The product covered by this order is certain cut–to-length carbon steel plate from the People's Republic of China. Included in this description is hot–rolled iron and non–alloy steel universal mill plates (*i.e.*, flat–rolled products rolled on four faces or in a closed box pass, of a width exceeding 150 mm but not exceeding 1250 mm and of a thickness of not less than 4 mm, not in coils and without patterns in relief), of rectangular shape, neither clad, plated nor coated with metal, whether or not painted, varnished, or coated with plastics or other nonmetallic substances; and certain iron and non–alloy steel flat–rolled products not in coils, of rectangular shape, hot–rolled, neither clad, plated, nor coated with metal, whether or not painted, varnished, or coated with plastics or other nonmetallic substances, 4.75 mm or more in thickness and of a width which exceeds 150 mm and measures at least twice the thickness. Included as subject merchandise in this order are flat–rolled products of nonrectangular cross-section where such cross-section is achieved subsequent to the rolling process (*i.e.*, products which have been ''worked after rolling'') - for example, products which have been bevelled or rounded at the edges. This merchandise is currently classified in the Harmonized Tariff Schedule of the United States (HTS) under item numbers 7208.40.3030, 7208.40.3060, 7208.51.0030, 7208.51.0045, 7208.51.0060, 7208.52.0000, 7208.53.0000, 7208.90.0000, 7210.70.3000, 7210.90.9000, 7211.13.0000, 7211.14.0030, 7211.14.0045, 7211.90.0000, 7212.40.1000, 7212.40.5000, 7212.50.0000. Although the HTS subheadings are provided for convenience and customs purposes, the written description of the scope of this order is dispositive. Specifically excluded from subject merchandise within the scope of this order is grade X–70 steel plate.

Merchandise Subject to the Minor Alterations Antidumping Circumvention Proceeding

The merchandise subject to this antidumping circumvention inquiry consists of all merchandise produced by Tianjin and/or imported by Toyota Tsusho containing 0.0008 percent or more boron, by weight, and otherwise meeting the requirements of the scope of the antidumping duty order as listed under the ''Scope of the Order'' section above, with the exception of merchandise meeting all of the following requirements: aluminum level of 0.02 percent or greater, by weight; a ratio of 3.4 to 1 or greater, by weight, of titanium to nitrogen; and a hardenability test (*i.e.*, Jominy test)

result indicating a boron factor of 1.8 or greater.

Initiation of Minor Alterations Antidumping Circumvention Proceeding

Section 781(c)(1) of the Act provides that the Department may find circumvention of an antidumping duty order when products which are of the class or kind of merchandise subject to an antidumping duty order have been ''altered in form or appearance in minor respects . . . whether or not included in the same tariff classification.'' The Department notes that, while the statute is silent as to what factors to consider in determining whether alterations are properly considered ''minor,'' the legislative history of this provision indicates there are certain factors which should be considered before reaching a circumvention determination. In conducting a circumvention inquiry under section 781(c) of the Act, the Department has generally relied upon ''such criteria as the overall physical characteristics of the merchandise, the expectations of the ultimate users, the use of the merchandise, the channels of marketing and the cost of any modification relative to the total value of the imported products.'' S. Rep. No.71, 100th Cong., 1st Sess. 100 (1987) (''In applying this provision, the Commerce Department should apply practical measurements regarding minor alterations, so that circumvention can be dealt with effectively, even where such alterations to an article technically transform it into a differently designated article.'').

As discussed below, certain domestic producers have presented evidence with respect to each of these criteria.

Overall Physical Characteristics

Certain domestic producers acknowledge that the presence of boron may be associated with enhanced hardenability of steel. *See id*. However, certain domestic producers have noted that other parameters are necessary for boron to have the effect in question (*see, e.g.*, September 10, 2008, submission at 5–9, and September 30, 2008, memorandum at 1–2). The limitation of the scope of this circumvention inquiry accounted for such circumstances. *See* ''Merchandise Subject to the Minor Alterations Antidumping Circumvention Proceeding'' section above. Unless these parameters are met, the boron is assumed to have no effect upon the hardenability of the steel. *See, e.g.*, September 10, 2008, submission at 6.

Expectations of the Ultimate Users

Certain domestic producers indicated they are unaware of any instances where customers expected or requested cut–to-length carbon steel plate with small amounts of boron added, other than to potentially avoid the added expenses to the plate products that result from the antidumping duties in place (*see* August 13, 2008, submission at 12), with the exception of those instances in which other parameters are fulfilled to allow enhanced hardenability of the product. As noted, the scope of the inquiry was limited to account for this exception. *See Overall Physical Characteristics* sub–section above.

Use of the Merchandise

Certain domestic producers state the product at issue is used for the same purposes as subject merchandise. *See* August 13, 2008, submission at 12. This is consistent with their later claim that the presence of the additional amounts of boron, in and of itself, is insignificant in terms of adding beneficial attributes to the steel. *See* September 10, 2008, submission at 4.

Channels of Marketing

Certain domestic producers state the channels of marketing for the boron–added cut–to-length plate and the subject plate are the same, noting that both products are marketed in the same manner, appeal to the same end users, and are used for the same end uses. *See* August 13, 2008, submission at 12. They note an electronic mail offer involving Tianjin and Toyota Tsusho directly targets U.S. customers of subject merchandise. *See id*. at 12–13 and Exhibit 1; see also September 10, 2008, submission at 3.

Cost of Modification

Certain domestic producers indicated the addition of boron at levels recognized as alloy amounts by the tariff schedule involve minimal additional cost. They cite the Department's finding in a previous ruling that reaching the 0.0008 percent threshold involved a cost amounting to only about one–third of one percent of the sales price. *See* August 13, 2008, submission at 13; *see also Preliminary Determination of Circumvention of Antidumping Order: Cut–to-Length Carbon Steel Plate From Canada*, 65 FR 64926, 64928 (October 31, 2000) (unchanged at *Final Canada Plate Determination*).

Based on the information provided by certain domestic producers, the Department finds there is sufficient basis to initiate an antidumping circumvention inquiry pursuant to section 781(c) of the Act to determine whether the merchandise subject to the inquiry (identified in the ''Merchandise Subject to the Minor Alterations Antidumping Circumvention Proceeding'' section above) involves a minor alteration to subject merchandise that is so insignificant as to render the resulting merchandise (classified as ''alloy'' steel under the HTSUS) subject to the antidumping duty order on certain cut–to-length carbon steel plate from the PRC.

The Department intends to issue its final determination within 300 days of the date of publication of this notice.

The Department will not order the suspension of liquidation of entries of any additional merchandise at this time. However, in accordance with 19 CFR 351.225(l)(2), if the Department issues a preliminary affirmative determination, we will then instruct U.S. Customs and Border Protection to suspend liquidation and require a cash deposit of estimated duties on the merchandise.

We intend to notify the International Trade Commission in the event of an affirmative preliminary determination of circumvention, in accordance with 781(e)(1) of the Act and 19 CFR 351.225(f)(7)(i)(C). The Department will, following consultation with interested parties, establish a schedule for questionnaires and comments on the issues. As noted above, the Department intends to issue its final determinations within 300 days of the date of publication of this initiation.

This notice is published in accordance with sections 781(c) and (d) of the Act and 19 CFR 351.225(i).

Dated: October 10, 2008.

David Spooner,

Assistant Secretary for Import Administration.

[FR Doc. E8–24910 Filed 10–17–08; 8:45 am]

BILLING CODE 3510–DS–S

DEPARTMENT OF COMMERCE

International Trade Administration

[A–427–827]

Sodium Metal from France: Notice of Final Determination of Sales at Less Than Fair Value and Negative Critical Circumstances

AGENCY: Import Administration, International Trade Administration, Department of Commerce.

SUMMARY: The Department of Commerce (the Department) has determined that sodium metal from France is being, or is likely to be, sold in the United States at less than fair value (LTFV), as provided in section 735 of the Tariff Act

of 1930, as amended (the Act). The estimated margins of sales at LTFV are listed below in the section entitled ''Continuation of Suspension of Liquidation.''

EFFECTIVE DATE: October 20, 2008.

FOR FURTHER INFORMATION CONTACT: Dennis McClure or Joy Zhang, AD/CVD Operations, Office 3, Import Administration, International Trade Administration, U.S. Department of Commerce, 14th Street and Constitution Avenue, NW, Washington, DC 20230; telephone (202) 482–5973 or (202) 482–1168, respectively.

SUPPLEMENTARY INFORMATION: On May 28, 2008, the Department published in the **Federal Register** its preliminary determination in the antidumping duty investigation of sodium metal from France. *See Sodium Metal from France: Notice of Preliminary Determination of Sales at Less Than Fair Value and Postponement of Final Determination*, 73 FR 30605 (May 28, 2008) (*Preliminary Determination*).

In the *Preliminary Determination*, based on our examination of E.I. DuPont de Nemours & Co. Inc.'s (the petitioner) targeted dumping allegation filed on April 21, 2008, we determined that there is no pattern of constructed export prices for comparable merchandise that differs significantly among purchasers. Therefore, we applied the average–to-average methodology to all U.S. sales by MSSA S.A.S., MSSA Co., and Columbia Sales International (collectively, MSSA). In the *Preliminary Determination*, the Department invited comments regarding the overall application of the targeted dumping test applied in this proceeding. Accordingly, we received comments within the case briefs submitted by the petitioner and MSSA on July 25, 2008. The petitioner and MSSA submitted rebuttal comments on July 30, 2008.

We conducted sales and cost verifications of the responses submitted by MSSA. *See* Memorandum to the File from Dennis McClure and Joy Zhang, Case Analysts, through James Terpstra, Program Manager, Office 3, entitled ''Verification of the Sales Response of MSSA S.A.S., MSSA Co., and Columbia Sales International in the Antidumping Duty Investigation of Sodium Metal from France,'' dated July 18, 2008 (Sales Verification Report); *see also* Memorandum to the File through Neal M. Halper, from LaVonne Clark, entitled ''Verification of the Cost Response of MSSA S.A.S. in the Antidumping Investigation of Sodium Metal from France,'' dated July 1, 2008 (Cost Verification Report). All verification reports are on file and available in the Central Records Unit (CRU), Room 1117 of the main Department of Commerce building.

Based on the Department's findings at verification, as well as the minor corrections presented by MSSA at the start of its respective verifications, we requested during verification that respondents submit revised sales databases. As requested, MSSA submitted its revised sales databases at verification on July 16, 2008.

On September 15, 2008, the petitioner submitted an allegation of critical circumstances. MSSA submitted comments responding to the petitioner's allegation of critical circumstances on September 25, 2008.

Period of Investigation

The period of investigation (POI) is October 1, 2006, to September 30, 2007. This period corresponds to the four most recent fiscal quarters prior to the month of the filing of the petition.

Scope of the Investigation

The merchandise covered by this investigation includes sodium metal (Na), in any form and at any purity level. Examples of names commonly used to reference sodium metal are sodium metal, sodium, metallic sodium, and natrium. The merchandise subject to this investigation is classified in the Harmonized Tariff Schedule of the United States subheading 2805.11.0000. The American Chemical Society Chemical Abstract Service (CAS) has assigned the name ''Sodium'' to sodium metal. The CAS registry number is 7440–23–5. For purposes of the investigation, the narrative description is dispositive, not the tariff heading, CAS registry number or CAS name, which are provided for convenience and customs purposes.

Analysis of Comments Received

All issues raised in the case and rebuttal briefs by parties to this antidumping investigation are addressed in the ''Issues and Decision Memorandum for the Antidumping Duty Investigation of Sodium Metal from France'' from Stephen J. Claeys, Deputy Assistant Secretary for Import Administration, to David M. Spooner, Assistant Secretary for Import Administration (Decision Memorandum), dated October 10, 2008, which is hereby adopted by this notice. A list of the issues which parties have raised and to which we have responded, all of which are in the Decision Memorandum, is attached to this notice as an appendix. Parties can find a complete discussion of all issues raised in this investigation and the corresponding recommendations in the Decision Memorandum, which is on file in the CRU. In addition, a complete version of the Decision Memorandum can be accessed directly on the Web at http://ia.ita.doc.gov/frn/. The paper copy and electronic version of the Decision Memorandum are identical in content.

Targeted Dumping

In the *Preliminary Determination*, with respect to targeted dumping, we followed the methodology outlined in the post–preliminary targeted dumping analysis in the investigations of Certain Steel Nails from the PRC and the UAE. **SEE** Memorandum to David M. Spooner, Assistant Secretary for Import Administration, from Stephen J. Claeys, Deputy Assistant Secretary for Import Administration, RE: Antidumping Duty Investigation of Certain Steel Nails from the Peoples Republic of China (PRC) and the United Arab Emirates (UAE), Subject: Post–Preliminary Determinations on Targeted Dumping, dated April 21, 2008 (April 21, 2008 Nails decision memorandum).[1] Based on the targeted dumping test that we applied in the *Preliminary Determination*, we did not find a pattern of constructed export prices for comparable merchandise that differ significantly among customers.[2] As a result, we applied the average–to-average methodology to the constructed export prices of all of MSSA's sales to the United States during the POI and calculated a preliminary margin of 62.62 percent for MSSA.[3]

In the *Preliminary Determination*, the Department applied the Nails targeted dumping test based on the methodology outlined in the April 21, 2008 Nails decision memorandum and found no targeted dumping. We have analyzed the case and rebuttal briefs[4] with respect to targeted dumping issues submitted for the record in this investigation and considered the changes made to the targeted dumping test applied in the final determinations of UAE and PRC Nails and PRC Tires.[5]

[1] *See Preliminary Determination* at 30606.

[2] *Id.* at 30607.

[3] *Id.* at 30609.

[4] *See* the petitioner's case brief, dated July 25, 2008; see also; MSSA's rebuttal brief, dated July 30, 2008, respectively.

[5] *See Certain Steel Nails from the United Arab Emirates: Notice of Final Determination of Sales at Not Less Than Fair Value*, 73 FR 33985 (June 16, 2008) and accompanying Issues and Decision Memorandum (*Steel Nails from the UAE*) dated June 6, 2008, at Comment 5; *see also; Certain Steel Nails from the People's Republic of China: Final Determination of Sales at Less Than Fair Value and Partial Affirmative Determination of Critical*

Continued

As a result of our analysis, we utilized the Nails targeted dumping test from the *Preliminary Determination* and applied certain modifications from *Nails and PRC Tires* for purposes of the final determination.[6]

As in the *Preliminary Determination*, we did not find a pattern of export prices for comparable merchandise that differ significantly among customers. For further discussion, see Comments 2 and 3 of the Decision Memorandum and the Memorandum to James Terpstra, Program Manager for the Office of AD/CVD Operations, from Dennis McClure and Joy Zhang, Analysts for the Office of AD/CVD Operations, RE: Antidumping Duty Investigation of Sodium Metal from France, Subject: Final Analysis Memorandum for Sales MSSA, dated October 10, 2008 (Final Analysis Memorandum).

Critical Circumstances

On September 15, 2008, the petitioner filed a critical circumstances allegation with respect to imports of sodium metal from France. On September 25, 2008, MSSA submitted comments and monthly shipment data in response to the petitioner's allegation. Although the Department found that in accordance with section 735(a)(3)(A)(ii) of the Act, the person by whom, or for whose account, the merchandise was imported knew or should have known that the exporter was selling the subject merchandise at less than its fair value and there was likely to be material injury of such sales, the Department has made a final negative determination concerning critical circumstances for MSSA and all other French manufacturers and exporters because, in accordance with section 735(a)(3)(B) of the Act, and based on MSSA's shipment data, MSSA and all other companies did not have massive imports during a relatively short period. See Memorandum to Stephen J. Claeys, Deputy Assistant Secretary for Import Administration, from Melissa Skinner, Director, AD/CVD Operations, Subject: Antidumping Duty Investigation of Sodium Metal from France, Regarding: Final Negative Determination of Critical Circumstances, dated October 10, 2008, which is hereby adopted by this notice.

Verification

As provided in section 782(i) of the Act, we verified the sales and cost information submitted by MSSA for use in our final determination. We used standard verification procedures including an examination of relevant accounting and production records, and original source documents provided by MSSA. See Sales Verification Report and Cost Verification Report.

Changes Since the Preliminary Determination

Based on our analysis of the comments received and our findings at verification, we have made certain changes to the margin calculation for MSSA. For a discussion of these changes, see the Decision Memorandum at Comments 6, 8, 10, and 11, Final Analysis Memorandum, and Memorandum to Neal M. Halper, Director, Office of Accounting, from LaVonne Clark, Senior Accountant, Reference: Antidumping Duty Investigation of Sodium Metal from France, Subject: Cost of Production and Constructed Value Calculation Adjustments for the Final Determination MSSA S.A.S., MSSA Co., and Columbia Sales International, Inc. (collectively ''MSSA''), dated October 10, 2008.

Final Determination Margins

We determine that the following weighted–average dumping margin exists for the period October 1, 2006, to September 30, 2007:

Manufacturer/Exporter	Weighted–Average Margin (percent)
MSSA S.A.S.	66.64
All Others	66.64

Disclosure

We will disclose the calculations performed within five days of the date of publication of this notice to parties in this proceeding in accordance with 19 CFR 351.224(b).

Continuation of Suspension of Liquidation

Pursuant to section 735(c)(1)(B) of the Act, we will instruct Customs and Border Protection (CBP) to continue to suspend liquidation of all entries of subject merchandise from France, entered, or withdrawn from warehouse, for consumption on or after May 28, 2008, the date of publication of the *Preliminary Determination*. We will instruct CBP to require a cash deposit or the posting of a bond equal to the weighted–average dumping margin, as indicated in the chart above, as follows: (1) the rate for MSSA S.A.S. will be 66.64 percent; (2) if the exporter is not a firm identified in this investigation, but the producer is, the rate will be the rate established for the producer of the subject merchandise; (3) the rate for all other producers or exporters will be 66.64 percent. The suspension of liquidation instructions will remain in effect until further notice.

International Trade Commission Notification

In accordance with section 735(d) of the Act, we have notified the International Trade Commission (ITC) of our final determination. As our final determination is affirmative and in accordance with section 735(b)(2) of the Act, the ITC will determine, within 45 days, whether the domestic industry in the United States is materially injured, or threatened with material injury, by reason of imports or sales (or the likelihood of sales) for importation of the subject merchandise. If the ITC determines that material injury or threat of material injury does not exist, the proceeding will be terminated and all securities posted will be refunded or canceled. See section 735(c)(2) of the Act. If the ITC determines that such injury does exist, the Department will issue an antidumping duty order directing CBP to assess antidumping duties on all imports of the subject merchandise entered, or withdrawn from warehouse, for consumption on or after the effective date of the suspension of liquidation.

Notification Regarding APO

This notice also serves as a reminder to parties subject to administrative protective order (APO) of their responsibility concerning the disposition of proprietary information disclosed under APO in accordance with 19 CFR 351.305. Timely notification of return/destruction of APO materials or conversion to judicial protective order is hereby requested. Failure to comply with the regulations and the terms of an APO is a sanctionable violation.

This determination is issued and published pursuant to sections 735(d) and 777(i)(1) of the Act.

Circumstances, 73 FR 33977 (June 16, 2008) and accompanying Issues and Decision Memorandum (*Steel Nails from the PRC*) dated June 6, 2008, at Comments 3, 5, and 9 (collectively, Nails); *see also; Certain New Pneumatic Off-The-Road Tires from the People's Republic of China: Final Affirmative Determination of Sales at Less Than Fair Value and Partial Affirmative Determination of Critical Circumstances*, 73 FR 40480 (July 15, 2008) and accompanying Issues and Decision Memorandum (*PRC Tires*) dated July 7, 2008, at Comments 23. B and 23.G.

[6] *Id.*

Dated: October 10, 2008.

David M. Spooner,

Assistant Secretary for Import Administration.

Appendix -- Issues in Decision Memorandum

ISSUES

Comment 1: Whether the Department Should Include ''Form'' As Part of Model Match Criteria
Comment 2: Whether the Department Should Calculate the Antidumping Duty Margin using the Transaction–to-Transaction Methodology
Comment 3: Whether the Department's Targeted Dumping Test is Flawed and Should be Replaced with the ''preponderance at two percent test'' (P/2 test)
Comment 4: Whether the Department Should Alter Its Level of Trade Analysis
Comment 5: Whether the Department Should Calculate Certain Home Market Packing Expenses Based on Facts Available
Comment 6: Whether the Department Should Re–allocate Indirect Selling Expenses Based on Sales Value
Comment 7: Whether the Department Should Deduct Freight from Transfer Price Before Calculating Domestic Indirect Selling Expenses
Comment 8: Whether the Department Should Correct MSSA Co.'s Inventory Carrying Costs in the United States
Comment 9: Whether the Department Incorrectly Characterized MSSA Co.'s Quantity and Value Reconciliation
Comment 10: Whether the Department Correctly Calculated Indirect Selling Expenses Incurred in the Home Market for Purposes of the CEP Deduction
Comment 11: Whether the Department Should Consider Certain Expenses Reported as Indirect Selling Expenses as Direct Deductions from the U.S. Price

[FR Doc. E8–24912 Filed 10–17–08; 8:45 am]

BILLING CODE 3510–DS–S

DEPARTMENT OF COMMERCE

International Trade Administration

Notice of Request for Public Comment

AGENCY: International Trade Administration, Department of Commerce.

ACTION: Notice of request for public comment.

SUMMARY: The Department of Commerce's International Trade Administration (ITA) is seeking U.S. companies and industry associations in the field of Information and Communication Technologies (ICT) who are interested in the Vietnam's business climate for U.S. products or services and how policy issues may have an impact on trade and investment in this sector. In 2007, the ITA launched the U.S.-Vietnam ICT Commercial Dialogue with the Ministry of Information and Communications (MIC) in Vietnam to discuss various ICT issues that have an impact on trade between our two countries. The U.S. and Vietnamese companies that participated in the meeting made several recommendations for future areas of cooperation. To continue facilitating input from the private sector, ITA and MIC agreed to create a Business Advisory Group under the Dialogue and encourage wide participation from both countries. The main objectives of the Business Advisory Group are to identify areas of mutual concern to be potentially addressed by the Working Group of the U.S.-Vietnam ICT Commercial Dialogue, and to coordinate activities that could be considered deliverables for the Dialogue. Examples of issues that have been covered so far include advancement of telecom infrastructure, protection of intellectual property rights for software, and supporting electronic commerce by developing legal frameworks for data privacy.

DATES: November 12–13, 2008.

ADDRESSES: Inquiries about participation in the Business Advisory Group should be addressed to the contact below, and received by close of business on Monday, November 10, 2008.

FOR FURTHER INFORMATION CONTACT: Cora Dickson, U.S. Department of Commerce, Office of Technology and Electronic Commerce, 1401 Constitution Avenue, NW., Room 4327, Washington, DC 20230; *Telephone:* 202–482–6083; *Fax:* 202–482–5834; *e-mail: cora.dickson@mail.doc.gov.*

SUPPLEMENTARY INFORMATION: The Business Advisory Group is expected to have participants from U.S. and Vietnamese companies or associations and generally be responsible for developing their own internal communication and consultation mechanisms, including informal meetings. Participation in the Business Advisory Group should be open to any ICT companies and industry associations who wish to contribute to the Dialogue. However, due to space constraints, only two representatives per company and/or organization can attend the upcoming Business Advisory Group meeting, which will be hosted at the Department of Commerce in Washington on November 12 in preparation for the U.S.-Vietnam ICT Commercial Dialogue Working Group meeting on November 13.

Dated: October 14, 2008.

Robin Layton,

Director, Office of Technology and Electronic Commerce.

[FR Doc. E8–24878 Filed 10–17–08; 8:45 am]

BILLING CODE 3510–DR–P

DEPARTMENT OF COMMERCE

International Trade Administration

Notice of Request for Public Comment

AGENCY: International Trade Administration, Department of Commerce.

ACTION: Notice of request for public comment.

SUMMARY: The Department of Commerce's International Trade Administration (ITA) is seeking U.S. academic institutions, training centers, and other interested parties who would like to organize joint activities with their counterparts in Vietnam in the field of Information and Communication Technologies (ICT). In 2007, the ITA launched the U.S.-Vietnam ICT Commercial Dialogue with the Ministry of Information and Communications (MIC) in Vietnam to discuss various ICT issues that have an impact on trade between our two countries. The U.S. and Vietnamese companies that participated in the meeting recommended the establishment of a ''public/private partnership for the development of human resources through technical training programs.'' Therefore MIC has proposed that an Academic Advisory Group be created in addition to a Business Advisory Group under the Dialogue.

The objective of the Academic Advisory Group would be to facilitate an exchange of ideas on the best curriculum to meet the needs of ICT growth, and to increase opportunities for Vietnamese citizens to study in the ICT field in Vietnam through distance learning mechanisms, or at United States institutions.

The initial meeting of the Academic Advisory Group, to be held via videoconference, is tentatively scheduled for November 12, 2008. A representative of the group would make a brief report at the ICT Dialogue Working Group meeting on November 13 in Washington, DC. A follow-up meeting is anticipated in January 2009 in Hanoi.

DATES: November 12–13, 2008.

ADDRESSES: Inquiries about participation in the videoconference should be addressed to the contact below, and received by close of business on Monday, November 10, 2008.

FOR FURTHER INFORMATION CONTACT: Cora Dickson, U.S. Department of Commerce, Office of Technology and Electronic Commerce, 1401 Constitution Avenue, NW., Room 4327, Washington, DC 20230; *Telephone:* 202–482–6083; *Fax:* 202–482–5834; *E-mail: cora.dickson@mail.doc.gov.*

SUPPLEMENTARY INFORMATION: U.S. Ambassador to Vietnam Michael Michalak has made education a top priority. The U.S. Embassy in Hanoi hosted an education conference in January as a first step, and expects to hold another one in January 2009. Vietnam currently faces an estimated deficit of $100 million per year in funding its educational plans, and is trying to close the gap by seeking international support in paying for and helping implement reforms. In the field of ICT, Vietnam is facing a shortage of qualified workers to meet the increasing need for IT skills as it modernizes its infrastructure. U.S. companies also hope to create opportunities for trade and investment as ICT grows stronger in Vietnam.

Dated: October 14, 2008.

Robin Layton,

Director, Office of Technology and Electronic Commerce.

[FR Doc. E8–24880 Filed 10–17–08; 8:45 am]

BILLING CODE 3510–DR–P

DEPARTMENT OF COMMERCE

National Oceanic and Atmospheric Administration

Proposed Information Collection; Comment Request; Alaska Individual Fishing Quota Cost Recovery Program Requirements

AGENCY: National Oceanic and Atmospheric Administration (NOAA).

ACTION: Notice.

SUMMARY: The Department of Commerce, as part of its continuing effort to reduce paperwork and respondent burden, invites the general public and other Federal agencies to take this opportunity to comment on proposed and/or continuing information collections, as required by the Paperwork Reduction Act of 1995.

DATES: Written comments must be submitted on or before December 19, 2008.

ADDRESSES: Direct all written comments to Diana Hynek, Departmental Paperwork Clearance Officer, Department of Commerce, Room 6625, 14th and Constitution Avenue, NW., Washington, DC 20230 (or via the Internet at *dHynek@doc.gov*).

FOR FURTHER INFORMATION CONTACT: Requests for additional information or copies of the information collection instrument and instructions should be directed to Patsy A. Bearden, (907) 586–7008 or *patsy.bearden@noaa.gov*.

SUPPLEMENTARY INFORMATION:

I. Abstract

The Magnuson Stevens Fishery Conservation and Management Act requires the Secretary of Commerce to conduct a Cost Recovery Program to cover the management and enforcement costs of the Alaska Individual Fishing Quota (IFQ) Program. This Cost Recovery Program requires IFQ permit holders to submit information about the value of landings of IFQ species and to calculate and submit fees. The Cost Recovery Program also requires Registered Buyers to submit information about the value and volume of landings of IFQ species.

II. Method of Collection

Reports and payments may be submitted online or mailed.

III. Data

OMB Control Number: 0648–0398.

Form Number: None.

Type of Review: Regular submission.

Affected Public: Business or other for-profit organizations; individuals or households.

Estimated Number of Respondents: 2,726.

Estimated Time per Response: IFQ Permit Holder Fee Submission Form, IFQ Registered Buyer Ex-vessel Value and Volume Report and appeal process, 2 hours each.

Estimated Total Annual Burden Hours: 5,452.

Estimated Total Annual Cost to Public: $3,000 in recordkeeping/reporting costs.

IV. Request for Comments

Comments are invited on: (a) Whether the proposed collection of information is necessary for the proper performance of the functions of the agency, including whether the information shall have practical utility; (b) the accuracy of the agency's estimate of the burden (including hours and cost) of the proposed collection of information; (c) ways to enhance the quality, utility, and clarity of the information to be collected; and (d) ways to minimize the burden of the collection of information on respondents, including through the use of automated collection techniques or other forms of information technology.

Comments submitted in response to this notice will be summarized and/or included in the request for OMB approval of this information collection; they also will become a matter of public record.

Dated: October 15, 2008.

Gwellnar Banks,

Management Analyst, Office of the Chief Information Officer.

[FR Doc. E8–24887 Filed 10–17–08; 8:45 am]

BILLING CODE 3510–22–P

DEPARTMENT OF COMMERCE

National Oceanic and Atmospheric Administration

Proposed Information Collection; Comment Request; Application and Reports for Scientific Research and Enhancement Permits Under the Endangered Species Act

AGENCY: National Oceanic and Atmospheric Administration (NOAA).

ACTION: Notice.

SUMMARY: The Department of Commerce, as part of its continuing effort to reduce paperwork and respondent burden, invites the general public and other Federal agencies to take this opportunity to comment on proposed and/or continuing information collections, as required by the Paperwork Reduction Act of 1995.

DATES: Written comments must be submitted on or before December 19, 2008.

ADDRESSES: Direct all written comments to Diana Hynek, Departmental Paperwork Clearance Officer, Department of Commerce, Room 6625, 14th and Constitution Avenue, NW., Washington, DC 20230 (or via the Internet at *dHynek@doc.gov*).

FOR FURTHER INFORMATION CONTACT: Requests for additional information or copies of the information collection instrument and instructions should be directed to Gary Rule, (503) 230–5424 or *Gary.Rule@noaa.gov.*

SUPPLEMENTARY INFORMATION:

I. Abstract

The Endangered Species Act of 1973 (ESA; 16 U.S.C. 1531 *et seq.*) imposed prohibitions against the taking of endangered species. Section 10 of the ESA allows permits authorizing the taking of endangered species for

research/enhancement purposes. The corresponding regulations established procedures for persons to apply for such permits. In addition, the regulations set forth specific reporting requirements for such permit holders. The regulations contain two sets of information collections: (1) Applications for research/enhancement permits, and (2) reporting requirements for permits issued.

The required information is used to evaluate the impacts of the proposed activity on endangered species, to make the determinations required by the ESA prior to issuing a permit, and to establish appropriate permit conditions. To issue permits under ESA Section 10(a)(1)(A), the National Marine Fisheries Service (NMFS) must determine that (1) such exceptions were applied for in good faith, (2) if granted and exercised, will not operate to the disadvantage of such endangered species, and (3) will be consistent with the purposes and policy set forth in Section 2 of the ESA.

The currently approved application and reporting requirements are being revised to apply only to Pacific salmon and steelhead, as requirements regarding other species are being addressed in a separate information collection. Clarification of some of the instructions will also be provided, based on previous applicants' responses and submitted applications and reports.

II. Method of Collection

Respondents have a choice of either electronic or paper forms. Methods of submittal include e-mail of electronic forms, and mail and facsimile transmission of paper forms.

III. Data

OMB Control Number: 0648–0402.

Form Number: None.

Type of Review: Regular submission.

Affected Public: Non-profit institutions; State, local, or tribal government; business or other for-profit organizations.

Estimated Number of Respondents: 131.

Estimated Time per Response: Permit applications, 20 hours; permit modification requests and final reports, 10 hours; and annual reports, 5 hours.

Estimated Total Annual Burden Hours: 865.

Estimated Total Annual Cost to Public: $18,646.

IV. Request for Comments

Comments are invited on: (a) Whether the proposed collection of information is necessary for the proper performance of the functions of the agency, including whether the information shall have practical utility; (b) the accuracy of the agency's estimate of the burden (including hours and cost) of the proposed collection of information; (c) ways to enhance the quality, utility, and clarity of the information to be collected; and (d) ways to minimize the burden of the collection of information on respondents, including through the use of automated collection techniques or other forms of information technology.

Comments submitted in response to this notice will be summarized and/or included in the request for OMB approval of this information collection; they also will become a matter of public record.

Dated: October 15, 2008.

Gwellnar Banks,

Management Analyst, Office of the Chief Information Officer.

[FR Doc. E8–24888 Filed 10–17–08; 8:45 am]

BILLING CODE 3510–22–P

DEPARTMENT OF COMMERCE

National Oceanic and Atmospheric Administration

RIN 0648–XK57

Endangered and Threatened Species; Recovery Plan for White Abalone

AGENCY: National Marine Fisheries Service (NMFS), National Oceanic and Atmospheric Administration (NOAA), Commerce.

ACTION: Notice of availability.

SUMMARY: The National Marine Fisheries Service (NMFS) announces the availability of a final recovery plan for the white abalone (*Haliotis sorenseni*). This endangered gastropod is a long-lived, slow moving bottom dweller and is a member of the California Haliotids. Currently, isolated survivors have been identified along the mainland coast in Santa Barbara County and at some of the offshore islands and banks along the central California coast. NMFS' ultimate goal is to increase white abalone abundance to viable and self-sustaining levels such that the species can be downlisted to threatened status and eventually removed from the Endangered Species List.

ADDRESSES: The final Plan can be obtained via the Internet at: *http://www.nmfs.noaa.gov* or by submitting a request to the Assistant Regional Administrator, Protected Resources Division, Southwest Region, NMFS, 501 West Ocean Blvd., Suite 4200, Long Beach, CA 90802–4213. You may also contact NMFS by e-mail at: *whiteabalone.recoveryplan@noaa.gov*; by facsimile at: 562–980–4027, Attention: Melissa Neuman.

FOR FURTHER INFORMATION CONTACT: Melissa Neuman, NMFS, Southwest Region at 562–980–4115.

SUPPLEMENTARY INFORMATION:

Background

Recovery of endangered or threatened animals or plants is a primary goal of the endangered species program. A species is considered recovered once the species' ecosystem is restored and/or threats to the species are removed so that self-sustaining and self-regulating populations can be supported as persistent members of native biotic communities. Recovery plans describe actions considered necessary for the conservation of the species, establish criteria for downlisting or delisting listed species, and estimate the time and cost for implementing the measures needed for recovery.

White abalone (*Haliotis sorenseni*) was listed as the first federally endangered marine invertebrate under the United States Endangered Species Act of 1973 (16 U.S.C. 1531 *et seq.*) (ESA) in May 2001. The ESA requires that NOAA's National Marine Fisheries Service (NMFS) develop and implement recovery plans for the conservation and survival of threatened and endangered species under its jurisdiction, unless it is determined that such plans would not promote the conservation of the species. Accordingly, during the summer of 2002, NMFS appointed a recovery team comprised of experts in the fields of abalone biology and ecology, conservation biology, genetics, population dynamics and modeling, pathology, aquaculture, and marine policy to develop a recovery plan (Plan) as mandated by the ESA.

NMFS sought a scientific review of the draft Plan by 12 experts in October 2005. NMFS requested that the scientific reviewers consider: (1) issues and assumptions relating to the biological and ecological information of the draft Plan, and (2) scientific data relating to the tasks in the proposed recovery program. Four reviewers responded to NMFS' request. The recovery team reconvened in June 2006 to consider the reviewer's comments and incorporate changes to the draft Plan accordingly. On November 2, 2006 (71 FR 64512) the draft Plan was made available for public comment. NMFS considered all substantive comments and information presented during the public comment period in the course of finalizing this Plan. We will forward

substantive comments regarding recovery plan implementation to appropriate Federal or other entities so that they can take these comments into account during the course of implementing recovery actions.

The purposes of the Plan are to: (1) delineate those aspects of white abalone biology, life history, and threats that are pertinent to its endangerment and recovery; (2) outline and justify a strategy to achieve recovery; (3) identify the site-specific management actions necessary to achieve recovery; (4) identify goals and criteria by which to measure the achievement of recovery; (5) serve as an outreach tool by articulating the reasons for white abalone's endangerment, and by explaining why the particular suite of recovery actions described is the most effective and efficient approach to achieving recovery; (6) help potential cooperators and partners understand the rationale behind the recovery actions identified, and assist them in identifying how they can facilitate recovery; (7) serve as a tool for monitoring recovery activities; and (8) be used to obtain funding for NMFS and its partners by identifying necessary recovery actions and their relative priority in the recovery process.

The objective of this Plan is to provide a framework for the recovery of white abalone so that protection under the ESA is no longer necessary. As recovery criteria are met, the status of the white abalone will be reviewed and considered for reclassification to threatened status or for removal from the Federal List of Endangered and Threatened Wildlife and Plants (50 CFR part 17). The white abalone will be considered for delisting when: (1) the density of emergent (detectable by human observation without substrate disturbance) animals (short term) is greater than 2, 000 per hectare for 75 percent of the geographic localities; (2) a total of 380,000 animals are maintained in the wild, distributed among all geographic localities in the USA and Mexico; (3) the proportion of size of emergent animals in 75 percent of geographic localities includes at least 85 percent intermediate-size animals (90 to 130 mm); (4) proportion of size of emergent animals in 75 percent of geographic localities includes no more than 15 percent large animals (≤130 mm); (5) there is a stable or increasing estimate of geometric population growth (lambda ≥1) for >75 percent of the geographic localities over a ten year period; and (6) there is reoccupation of white abalone over a spatial scale that encompasses their historic range such that 75 percent of the geographic localities in the USA and Mexico are reoccupied and meet the recovery criteria.

Dated: October 14, 2008.

Angela Somma,

Chief, Endangered Species Division, Office of Protected Resources, National Marine Fisheries Service.

[FR Doc. E8–24921 Filed 10–17–08; 8:45 am]

BILLING CODE 3510–22–S

DEPARTMENT OF COMMERCE

National Telecommunications and Information Administration

[Docket No. 0810141353–81354–01]

Public Telecommunications Facilities Program: Closing Date

AGENCY: National Telecommunications and Information Administration (NTIA), Commerce.

ACTION: Notice of Closing Date for Solicitation of Applications; Catalog of Federal Domestic Assistance

SUMMARY: Pursuant to the Consolidated Security, Disaster Assistance, and Continuing Appropriations Act, 2009. Public Law No. 110–329 (2008), the National Telecommunications and Information Administration (NTIA), U.S. Department of Commerce, announces the solicitation of applications for planning and construction grants for public telecommunications facilities under the Public Telecommunications Facilities Program (PTFP). The PTFP assists, through matching grants, in the planning and construction of public telecommunications facilities in order to: (1) Extend delivery of services to as many citizens as possible by the most cost-effective means, including use of broadcast and non-broadcast technologies; (2) increase public telecommunications services and facilities available to, operated by, and controlled by minorities and women; and (3) strengthen the capability of existing public television and radio stations to provide public telecommunications services to the public.

DATES: Applications must be received prior to 5 p.m. Eastern Time (Closing Time), December 18, 2008 (Closing Date). Applications submitted by facsimile are not acceptable. If an application is received after the Closing Date due to (1) carrier error, when the carrier accepted the package with a guarantee for delivery by the Closing Date and Closing Time, (2) significant weather delays or natural disasters, or (3) delays due to national security issues, NTIA will, upon receipt of proper documentation, consider the application as having been received by the deadline. NTIA will not accept applications posted on the Closing Date or later and received after this deadline.

ADDRESSES: To obtain a printed application package, submit completed applications, or send any other correspondence, write to PTFP at the following address (please note the new room number): NTIA/PTFP, Room H–4812, U.S. Department of Commerce, 1401 Constitution Avenue, NW., Washington, DC 20230. Application materials may be obtained electronically via the Internet at *http://www.ntia.doc.gov/ptfp* or *http://www.grants.gov.*

FOR FURTHER INFORMATION CONTACT: William Cooperman, Director, Public Broadcasting Division, *telephone:* (202) 482–5802; *fax:* (202) 482–2156. Information about the PTFP can also be obtained electronically via the Internet at *http://www.ntia.doc.gov/ptfp.*

SUPPLEMENTARY INFORMATION:

Electronic Access

The full funding opportunity announcement for the PTFP fiscal year (FY) 2009 grant cycle is available through *http://www.Grants.gov* or by contacting the PTFP office at the address noted above.

Funding Availability

Issuance of grants is subject to the availability of FY 2009 funds. At this time, the Congress has passed the Consolidated Security, Disaster Assistance, and Continuing Appropriations Act, 2009. Public Law No. 110–329 (2008), to fund operations of the PTFP through March 6, 2009. Further notice will be made in the **Federal Register** about the final status of funding for this program at the appropriate time. For FY 2008, NTIA awarded $18.5 million in PTFP funds to 109 projects, including 61 radio awards, 45 television awards and 3 nonbroadcast awards. The radio awards ranged from $8,800 to $337,684. The television awards ranged from $10,000 to $801,345. The nonbroadcast awards ranged from $89,853 to $187,931.

Statutory and Regulatory Authority

The Public Telecommunications Facilities Program is authorized by the Communications Act of 1934, as amended, 47 U.S.C. 390–393, 397–399(b). The PTFP operates pursuant to rules (1996 Rules) which were published on November 8, 1996 (61 FR 57966). Copies of the 1996 Rules (15

CFR Part 2301) are posted on the NTIA Internet site at *http://www.ntia.doc.gov/Rules/currentrules.htm,* and NTIA will make printed copies available to applicants upon request.

Supplemental Policies

The following supplemental policies will also be in effect:

(A) Applicants may file emergency applications at any time.

(B) Applicants may file requests for Federal Communications Commission (FCC) authorizations with the FCC after the PTFP Closing Date. Grant applicants for Ku-band satellite uplinks may submit FCC applications after a PTFP award is made. NTIA may accept FCC authorizations that are in the name of an organization other than the PTFP applicant.

(C) PTFP applicants are not required to submit copies of their PTFP applications to the FCC, nor are they required to submit copies of the FCC transmittal cover letters as part of their PTFP applications. PTFP applicants for distance learning projects must notify the state telecommunications agencies in the states in which they are located, but they are not required to notify every state telecommunications agency in a potential service area.

(D) For digital television conversion projects, NTIA has created two new Subpriorities in the Broadcast Other category.

(E) For digital radio conversion projects, NTIA has created a new Subpriority in the Broadcast Other category.

Catalog of Domestic Federal Assistance

11.550, Public Telecommunications Facilities Program.

Eligibility

To apply for and receive a PTFP Construction Grant or Planning Grant, an applicant must be: (a) A public or noncommercial educational broadcast station; (b) a noncommercial telecommunications entity; (c) a system of public telecommunications entities; (d) a non-profit foundation, corporation, institution, or association organized primarily for educational or cultural purposes; or (e) a state, local, or Indian tribal government (or agency thereof), or a political or special purpose subdivision of a state.

Evaluation and Selection Process

See 15 CFR 2301.16 for a description of the Technical Evaluation and 15 CFR 2301.18 for the Selection Process.

Evaluation Criteria

See 15 CFR 2301.17 for a full description of the Evaluation Criteria. The six evaluation criteria are (1) Applicant Qualifications, (2) Financial Qualifications, (3) Project Objectives, (4) Urgency, (5) Technical Qualifications (construction applicants only) or Planning Qualifications (planning applicants only), and (6) Special Consideration.

Funding Priorities and Selection Factors

See 15 CFR 2301.4 and the supplemental policies above for a description of the PTFP Priorities and 15 CFR 2301.18 for the Selection Factors.

Cost Sharing Requirements

PTFP requires cost sharing. By statute, PTFP cannot fund a construction project for more than 75 per cent of the eligible project costs. NTIA has established a policy of funding most new public broadcasting station activation projects at a 75 per cent federal share, and most other television, radio and nonbroadcast projects at a 50 per cent federal share. NTIA can fund planning applications up to 100 per cent of the eligible project costs, but has established a policy of funding planning applications at a 75 per cent federal share. Any applicant can request federal funding greater than PTFP's policy, up to the statutory maximum, and provide justification for the request.

Intergovernmental Review

PTFP applications are subject to Executive Order 12372, ''Intergovernmental Review of Federal Programs,'' if the state in which the applicant organization is located participates in the process. Usually submission to the State Single Point of Contact (SPOC) needs to be only the SF 424 and PTFP–2 pages of the application, but applicants should contact their own SPOC offices to find out about and comply with its requirements. The PTFP Internet site has a link to the Office of Management and Budget (OMB) home page which has the names and addresses of the SPOC offices. Applicants may directly access the OMB Internet site at *http://www.whitehouse.gov/omb/grants/spoc.html*. Printed copies of the SPOC list are available from PTFP.

Universal Identifier

All applicants (nonprofit, state, local government, universities, and tribal organizations) will be required to provide a Dun and Bradstreet Data Universal Numbering System (DUNS) number during the application process. See the October 30, 2002 (67 FR 66177) and April 8, 2003 (68 FR 17000) **Federal Register** notices for additional information. Organizations can receive a DUNS number at no cost by calling the dedicated toll-free DUNS Number request line 1–866–705–5711 or via the Internet (*http://www.dunandbradstreet.com*).

The Department of Commerce Pre-Award Notification Requirements for Grants and Cooperative Agreements

The Department of Commerce Pre-Award Notification of Requirements for Grants and Cooperative Agreements contained in the **Federal Register** notice of February 11, 2008, (73 FR 7696) is applicable to this solicitation.

Limitation of Liability

In no event will the Department of Commerce be responsible for proposal preparation costs if this program fails to receive funding or is cancelled because of other agency priorities. Publication of this announcement does not obligate the agency to award any specific project or to obligate any available funds.

Paperwork Reduction Act

Notwithstanding any other provision of the law, no person is required to respond to, nor shall any person be subject to a penalty for failure to comply with, a collection of information subject to the requirements of the Paperwork Reduction Act (PRA), unless that collection displays a currently valid Office of Management and Budget (OMB) control number. The PTFP application form has been cleared under OMB Control No. 0660–0003.

Executive Order 13132

It has been determined that this notice does not contain policies with Federalism implications as that term is defined in Executive Order 13132.

Administrative Procedure Act/ Regulatory Flexibility Act

Prior notice and opportunity for public comment are not required by the Administrative Procedure Act or any other law for this rule concerning grants, benefits, and contracts (5 U.S.C. 553(a)(2)). Because notice and opportunity for comment are not required pursuant to 5 U.S.C. 553 or any other law, the analytical requirements of the Regulatory Flexibility Act (5 U.S.C. 601 *et seq.*) are inapplicable. Therefore, a regulatory flexibility analysis has not been prepared.

Dr. Bernadette McGuire-Rivera,

Associate Administrator, Office of Telecommunications and Information Applications.

[FR Doc. E8–24849 Filed 10–17–08; 8:45 am]

BILLING CODE 3510–60–P

DEPARTMENT OF COMMERCE

[Docket No. PTO–P–2008–0042]

United States Patent and Trademark Office

Grant of Interim Extension of the Term of U.S. Patent No. 4,919,140; Andara™ OFS™ System

AGENCY: United States Patent and Trademark Office.

ACTION: Notice of interim patent term extension.

SUMMARY: The United States Patent and Trademark Office has issued a certificate under 35 U.S.C. 156(d)(5) for a one-year interim extension of the term of U.S. Patent No. 4,919,140.

FOR FURTHER INFORMATION CONTACT: Mary C. Till by telephone at (571) 272–7755; by mail marked to her attention and addressed to the Commissioner for Patents, Mail Stop Patent Ext., P.O. Box 1450, Alexandria, VA 22313–1450; by fax marked to her attention at (571) 273–7755, or by e-mail to *Mary.Till@uspto.gov.*

SUPPLEMENTARY INFORMATION: Section 156 of Title 35, United States Code, generally provides that the term of a patent may be extended for a period of up to five years if the patent claims a product, or a method of making or using a product, that has been subject to certain defined regulatory review, and that the patent may be extended for interim periods of up to a year if the regulatory review is anticipated to extend beyond the expiration date of the patent.

On September 29, 2008, the patent owner, Purdue Research Foundation, timely filed an application under 35 U.S.C. 156(d)(5) for an interim extension of the term of U.S. Patent No. 4,919,140. The patent claims the medical device Andara™ OFS™ System and a method of using the Andara™ OFS™ System. The application indicates that a Humanitarian Device Exemption, HDE 070002, for the medical device Andara™ OFS™ System has been filed and is currently undergoing regulatory review before the Food and Drug Administration for permission to market or use the product commercially.

Review of the application indicates that except for permission to market or use the product commercially, the subject patent would be eligible for an extension of the patent term under 35 U.S.C. 156, and that the patent should be extended for one year as required by 35 U.S.C. 156(d)(5)(B). Because it is apparent that the regulatory review period will continue beyond the original expiration date of the patent (October 14, 2008), interim extension of the patent term under 35 U.S.C. 156(d)(5) is appropriate.

An interim extension under 35 U.S.C. 156(d)(5) of the term of U.S. Patent No. 4,919,140 is granted for a period of one year from the original expiration date of the patent, i.e., until October 14, 2009.

Dated: October 14, 2008.

Jon W. Dudas,

Under Secretary of Commerce for Intellectual Property and Director of the United States Patent and Trademark Office.

[FR Doc. E8–24881 Filed 10–17–08; 8:45 am]

BILLING CODE 3510–62–P

COURT SERVICES AND OFFENDER SUPERVISION AGENCY FOR THE DISTRICT OF COLUMBIA

Senior Executive Service; Performance Review Board; Members

AGENCY: Court Services and Offender Supervision Agency for the District of Columbia.

ACTION: Notice.

SUMMARY: Section 4314(c) of Title 5, U.S.C. (as amended by the Civil Service Reform Act of 1978) requires each agency to establish, in accordance with regulations prescribed by the Office of Personnel Management, one or more Performance Review Boards (PRB) to review, evaluate and make a final recommendation on performance appraisals assigned to individual members of the agency's Senior Executive Service. The PRB established for the Court Services and Offender Supervision Agency (CSOSA), including the District of Columbia Pretrial Services Agency, an independent entity within CSOSA, also makes recommendations to the agency head regarding SES performance awards, rank awards and bonuses. Section 4314(c)(4) requires that notice of appointment of Performance Review Board members be published in the **Federal Register**.

The following persons have been appointed to serve as members of the Performance Review Board for the Court Services and Offender Supervision Agency: Adrienne Poteat, Thomas Williams, Jasper Ormond, Cedric Hendricks, James Williams, Linda Mays, Arthur Elkins, William Kirkendale, Susan Shaffer, Clifford Keenan, and Kim Whatley from October 1, 2008, to September 30, 2010.

FOR FURTHER INFORMATION CONTACT: Tonya Turner, Deputy Associate Director for Human Resources, Court Services and Offender Supervision Agency, 655 15th Street, NW., Suite 800, Washington, DC 20005, (202) 220–5477.

Dated: October 14, 2008.

Adrienne Poteat,

Acting Director.

[FR Doc. E8–24927 Filed 10–17–08; 8:45 am]

BILLING CODE 3129–01–P

DEPARTMENT OF DEFENSE

Office of the Secretary

Missile Defense Advisory Committee

AGENCY: Department of Defense; Missile Defense Agency (MDA).

ACTION: Notice of closed meeting.

SUMMARY: Under the provisions of the Federal Advisory Committee Act of 1972 (5 U.S.C., Appendix, as amended) and the Government in the Sunshine Act of 1976 (5 U.S.C. 552b, as amended) and 41 CFR 102–3.150, the Department of Defense announces that the following Federal advisory committee meeting of the Missile Defense Advisory Committee.

DATES: Wednesday, October 29, 2008 (9 a.m. to 5:30 p.m.) and Thursday, October 30, 2008 (9 a.m. to 5:30 p.m.). Security clearance and visit requests are required for access.

ADDRESSES: 7100 Defense Pentagon, Washington, DC 20301–7100.

FOR FURTHER INFORMATION CONTACT: Mr. Al Bready, Designated Federal Officer at *mdac@mda.mil*, phone/voice mail 703–695–6438, or mail at 7100 Defense Pentagon, Washington, DC 20301–7100.

SUPPLEMENTARY INFORMATION:

Purpose of the Meeting: At this meeting, the Committee will receive classified briefings by Missile Defense Agency senior staff, Program Managers, senior Department of Defense leaders, representatives from industry and the Services on the policy, technical, and programmatic aspects of developing and deploying space-based sensors and interceptors that could provide for the defense of the U.S. Homeland, deployed forces, allies, friends from ballistic missile attack; and countering adversary space systems and anti-satellite weapon systems.

Agenda: Topics tentatively scheduled for classified discussion include, but are not limited to program status for the Kinetic Energy Interceptor/Multiple Kill Vehicle, Space Protection, and Space Tracking and Surveillance System; administrative work; and development of draft outbrief to the Director, Missile Defense Agency.

Meeting Accessibility: Pursuant to 5 U.S.C. 552b, as amended, and 41 CFR 102–3.155 the Missile Defense Agency has determined that the meeting shall be closed to the public. The Director, Missile Defense Agency, in consultation with the Missile Defense Agency Office of General Counsel, has determined in writing that the public interest requires that all sessions of the committee's meeting will be closed to the public because they will be concerned with classified information and matters covered by section 5 U.S.C. 552b(c)(1).

Committee's Designated Federal Officer: Mr. Al Bready, *mdac@mda.mil*, phone/voice mail 703–695–6438, or mail at 7100 Defense Pentagon, Washington, DC 20301–7100.

Written Statements: Pursuant to 41 CFR 102–3.105(j) and 102–3.140, and section 10(a)(3) of the Federal Advisory Committee Act of 1972, the public or interested organizations may submit written statements to the membership of the Missile Defense Advisory Committee about its mission and functions. Written statements may be submitted at any time or in response to the stated agenda of a planned meeting of the Missile Defense Advisory Committee.

All written statements shall be submitted to the Designated Federal Officer for the Missile Defense Advisory Committee, in the following formats: One hard copy with original signature and one electronic copy via e-mail (acceptable file formats: Adobe Acrobat PDF, MS Word or MS PowerPoint), and this individual will ensure that the written statements are provided to the membership for their consideration. Contact information for the Designated Federal Officer is as stated above and can also be obtained from the GSA's Federal Advisory Committee Act Database—*https://www.fido.gov/facadatabase/public.asp*.

Statements being submitted in response to the agenda mentioned in this notice must be received by the Designated Federal Officer at the address listed at least five calendar days prior to the meeting which is the subject of this notice. Written statements received after this date may not be provided to or considered by the Missile Defense Advisory Committee until its next meeting. The Designated Federal Officer will review all timely submissions with the Missile Defense Advisory Committee Chairperson and ensure they are provided to all members of the Missile Defense Advisory Committee before the meeting that is the subject of this notice.

Dated: October 14, 2008.

Patricia L. Toppings,

OSD Federal Register Liaison Officer, Department of Defense.

[FR Doc. E8–24844 Filed 10–17–08; 8:45 am]

BILLING CODE 5001–06–P

DEPARTMENT OF DEFENSE

Office of the Secretary

Missile Defense Advisory Committee

AGENCY: Department of Defense; Missile Defense Agency (MDA).

ACTION: Notice of closed meeting.

SUMMARY: Under the provisions of the Federal Advisory Committee Act of 1972 (5 U.S.C., Appendix, as amended) and the Government in the Sunshine Act of 1976 (5 U.S.C. 552b, as amended) and 41 CFR 102–3.150, the Department of Defense announces that the following Federal advisory committee meeting of the Missile Defense Advisory Committee.

DATES: Wednesday, November 5, 2008 (8 a.m. to 5 p.m.). Security clearance and visit requests are required for access.

ADDRESSES: 7100 Defense Pentagon, Washington, DC 20301–7100.

FOR FURTHER INFORMATION CONTACT: Mr. Al Bready, Designated Federal Officer at *mdac@mda.mil*, phone/voice mail 703–695–6438, or mail at 7100 Defense Pentagon, Washington, DC 20301–7100.

SUPPLEMENTARY INFORMATION:

Purpose of the Meeting: At this meeting, the Committee will receive classified briefings by Missile Defense Agency senior staff, Program Managers, senior Department of Defense leaders, representatives from industry and the Services on the policy, technical, and programmatic aspects of developing and deploying space-based sensors and interceptors that could provide for the defense of the U.S. Homeland, deployed forces, allies, friends from ballistic missile attack; and countering adversary space systems and anti-satellite weapon systems.

Agenda: Topics tentatively scheduled for classified discussion include, but are not limited to follow-up briefings on Space Protection, MDA Space Architecture Study, External Sensors Laboratory, and Space Tracking and Surveillance System; administrative work; and development of final outbrief to the Director, Missile Defense Agency.

Meeting Accessibility: Pursuant to 5 U.S.C. 552b, as amended, and 41 CFR 102–3.155 the Missile Defense Agency has determined that the meeting shall be closed to the public. The Director, Missile Defense Agency, in consultation with the Missile Defense Agency Office of General Counsel, has determined in writing that the public interest requires that all sessions of the committee's meeting will be closed to the public because they will be concerned with classified information and matters covered by section 5 U.S.C. 552b(c)(1).

Committee's Designated Federal Officer: Mr. Al Bready, *mdac@mda.mil*, phone/voice mail 703–695–6438, or mail at 7100 Defense Pentagon, Washington, DC 20301–7100.

Written Statements: Pursuant to 41 CFR 102–3.105(j) and 102–3.140, and section 10(a)(3) of the Federal Advisory Committee Act of 1972, the public or interested organizations may submit written statements to the membership of the Missile Defense Advisory Committee about its mission and functions. Written statements may be submitted at any time or in response to the stated agenda of a planned meeting of the Missile Defense Advisory Committee.

All written statements shall be submitted to the Designated Federal Officer for the Missile Defense Advisory Committee, in the following formats: One hard copy with original signature and one electronic copy via e-mail (acceptable file formats: Adobe Acrobat PDF, MS Word or MS PowerPoint), and this individual will ensure that the written statements are provided to the membership for their consideration. Contact information for the Designated Federal Officer is as stated above and can also be obtained from the GSA's Federal Advisory Committee Act Database—*https://www.fido.gov/facadatabase/public.asp*.

Statements being submitted in response to the agenda mentioned in this notice must be received by the Designated Federal Officer at the address listed at least five calendar days prior to the meeting which is the subject of this notice. Written statements received after this date may not be provided to or considered by the Missile Defense Advisory Committee until its next meeting. The Designated Federal Officer will review all timely submissions with the Missile Defense Advisory Committee Chairperson and ensure they are provided to all members of the Missile Defense Advisory Committee before the meeting that is the subject of this notice.

Dated: October 14, 2008.

Patricia L. Toppings,

OSD Federal Register Liaison Officer, Department of Defense.

[FR Doc. E8–24845 Filed 10–17–08; 8:45 am]

BILLING CODE 5001–06–P

DEPARTMENT OF DEFENSE

Department of the Air Force

Notice of Availability for Non-Exclusive, Exclusive or Partially Exclusive Licensing of Invention

SUMMARY: Pursuant to the provisions of 37 CFR 404.4, the Department of the Air Force announces the availability for licensing of the invention described in Air Force invention number AFD 881, entitled *Light Emitting Diode with a Deoxyribonucleic Acid (DNA) Biopolymer Phosphor Based Coating for Solid State Lighting Object.*

FOR FURTHER INFORMATION CONTACT: Air Force Material Command Law Office, AFMC LO/JAZ, 2240 B. Street, Bldg. 11, Wright-Patterson AFB 45433–7109, attention, Bart S. Hersko. Telephone (937) 255–2838; fax (937) 255–3733 or e-mail: *Bart.Hersko@wpafb.af.mil.*

Bao-Anh Trinh,

Air Force Federal Register Liaison Officer.

[FR Doc. E8–24838 Filed 10–17–08; 8:45 am]

BILLING CODE 5001–05–P

DEPARTMENT OF DEFENSE

Department of the Army

Department of the Army; Corps of Engineers

Availability of a Draft Supplemental Environmental Impact Statement/ Environmental Impact Report for the Hamilton Wetland Restoration Project, Dredged Material Aquatic Transfer Facility in Marin County, CA

AGENCY: Department of the Army, U.S. Army Corps of Engineers, DoD.

ACTION: Notice.

SUMMARY: The U.S. Army Corps of Engineers (USACE) and California State Coastal Conservancy (Conservancy), in collaboration with the Long Term Management Strategy for Dredged Material in San Francisco Bay (LTMS) agencies, are proposing the use of an aquatic transfer facility (ATF) to beneficially use dredged material in restoring tidal wetlands at the original Hamilton Wetland Restoration Project site and the Bel Marin Keys Unit V Expansion site (collectively, the HWRP). The USACE is the lead agency for this project under the National Environmental Policy Act (NEPA). The Conservancy is the lead agency for this project under the California Environmental Quality Act (CEQA).

DATES: Submit comments by: December 1, 2008.

ADDRESSES: Written comments about the proposed action and ATF SEIS/EIR can be addressed to: Cynthia Fowler or Fari Tabatabai, U.S. Army Corps of Engineers, San Francisco District, 1455 Market Street, San Francisco, CA 94103; *cespn-et-pa@usace.army.mil;* 415–503–6870. Tom Gandesbery, California State Coastal Conservancy, 1330 Broadway, 13th Floor, Oakland, CA 94612; *tgandesbery@scc.ca.gov;* (510) 286–1015.

FOR FURTHER INFORMATION CONTACT: Cynthia Fowler or Fari Tabatabai, U.S. Army Corps of Engineers, San Francisco District, 1455 Market Street, San Francisco, CA 94103; *cespn-et-pa@usace.army.mil;* 415–503–6870. Betsy Wilson or Tom Gandesbery, California State Coastal Conservancy, 1330 Broadway, 13th Floor, Oakland, CA 94612; *bwilson@scc.ca.gov* or *tgandesbery@scc.ca.gov;* (510) 286–1015.

SUPPLEMENTARY INFORMATION: This document is a Supplemental Environmental Impact Statement/ Environmental Impact Report (SEIS/ EIR) to the 1998 HWRP Final EIS/EIR, the 2003 Bel Marin Keys Unit V Expansion (BMKV) Final SEIS/EIR, and the 2006 Supplemental Environmental Assessment (EA) to the Oakland Harbor Navigation Improvement (−50 ft.) Project Final EIS/EIR. The HWRP Final EIS/EIR and the BMKV Expansion Final SEIS/EIR can be found at: *http://www.hamiltonwetlands.org/documents.html.* As described in these previous reports, the authorized means of transporting dredged material to the HWRP is via a hydraulic off-loader in San Pablo Bay that pumps dredged material to the site through a submerged pipeline. Independent review, workshops with national experts, and a value engineering study that considered economic and operational effects determined that a more efficient and flexible method of transferring dredged material should be evaluated. Therefore, the Hamilton Wetland Restoration Project Dredged Material Aquatic Transfer Facility SEIS/EIR (ATF SEIS/R) evaluates alternative methods for the transfer of dredged material to the HWRP site. The ATF SEIS/EIR will support decision making by USACE, the Conservancy, and other responsible agencies to implement the proposed action and to ensure compliance with the NEPA, CEQA, and other pertinent laws and regulations.

The purpose of the proposed ATF is to maximize the operational flexibility of the HWRP to accommodate dredged material from both large and small dredging projects, as well as maximize the potential for beneficial use of dredged material at the HWRP site. Four alternatives are analyzed in this document: *Alternative 1:* No Action, which includes the authorized use of a hydraulic off-loader; *Alternative 2:* Unconfined ATF (Proposed Action); *Alternative 3:* Confined ATF; and *Alternative 4:* Direct Channel to BMKV Basin. Alternative 1 would include a floating and pile-secured off-loader facility, while Alternatives 2 and 3 would include construction of an in-Bay ATF basin. Alternative 3 would include incorporation of a structural enclosure around the perimeter of the ATF basin. Three of the alternatives (1–3) would require a slurry delivery pipeline and associated booster pump platform to transport material. Alternative 4 would involve dredging a direct channel from the vicinity of the in-Bay disposal site, SF–10, to the BMKV site and construction of a transfer basin on the BMKV site.

A public meeting will be held on Wednesday, November 12, 2008 from 5:30–7:30 p.m. at the Bay Model Visitor Center, Multi-Purpose Room, 2100 Bridgeway, Sausalito, CA.

The Hamilton Wetland Restoration Project Dredged Material Aquatic Transfer Facility SEIS/EIR is available for review at *http://www.hamiltonwetlands.org.* Copies of the document are also available for review during normal business hours at:

(1) Marin Civic Center, 3051 Civic Center Drive #427, San Rafael, CA 94903.

(2) Marin County Free Library—South Novato, 476 Ignacio Boulevard, Novato, CA 94949.

(3) Novato Public Library, 1720 Novato Boulevard, Novato, CA 94947.

(4) Petaluma Regional Library, 100 Fairgrounds Drive, Petaluma, CA 94952.

(5) Sonoma County Central Library, 3rd and E Street, Santa Rosa, CA 95402.

(6) California State Coastal Conservancy, 1330 Broadway, 13th Floor, Oakland, CA 94612.

Dated: October 10, 2008.

Laurence M. Farrell,

Lieutenant Colonel, U.S. Army, Commanding.

[FR Doc. E8–24848 Filed 10–17–08; 8:45 am]

BILLING CODE 3710–19–P

DEPARTMENT OF EDUCATION

Office of Special Education and Rehabilitative Services (OSERS); Overview Information: Rehabilitation Services Administration (RSA)—Rehabilitation Continuing Education Program (RCEP)—Regional Technical Assistance and Continuing Education (TACE) Centers; Notice Inviting Applications for New Awards for Fiscal Year (FY) 2009

Catalog of Federal Domestic Assistance (CFDA) Number: 84.264A.

DATES:

Applications Available: October 20, 2008.

Deadline for Transmittal of Applications: November 19, 2008.

Deadline for Intergovernmental Review: January 20, 2009.

Full Text of Announcement

I. Funding Opportunity Description

Purpose of Program: The purpose of the Rehabilitation Continuing Education Program is to support training centers that serve either a Federal region or another geographical area and provide for a broad integrated sequence of training activities that focus on meeting recurrent and common training needs of employed rehabilitation personnel throughout a multi-State geographical area.

Priority: This priority is from the notice of final priority for this program, published in the **Federal Register** on June 5, 2008 (73 FR 32010).

Absolute Priority: For FY 2009, this priority is an absolute priority. Under 34 CFR 75.105(c)(3) we consider only applications that meet this priority.

This priority is:

Regional Technical Assistance and Continuing Education (TACE) Centers.

Note: The full text of this priority is included in the notice of final priority published in the **Federal Register** on June 5, 2008 (73 FR 32010) and in the application package.

Program Authority: 29 U.S.C. 772.

Applicable Regulations: (a) The Education Department General Administrative Regulations (EDGAR) in 34 CFR parts 74, 75, 77, 79, 80, 81, 82, 84, 85, 86, 97, 98, and 99. (b) The regulations for this program in 34 CFR parts 385 and 389. (c) The notice of final priority and definitions, published in the **Federal Register** on June 5, 2008 (73 FR 32010).

Note: The regulations in 34 CFR part 79 apply to all applicants except Federally recognized Indian tribes.

Note: The regulations in 34 CFR part 86 apply to institutions of higher education only.

II. Award Information

Type of Award: Cooperative agreement.

Estimated Available Funds: The Administration has requested $37,766,000 for the Rehabilitation Training program for FY 2009, of which we intend to use an estimated $1,598,832 for this competition. The actual level of funding, if any, depends on final congressional action. However, we are inviting applications to allow enough time to complete the grant process if Congress appropriates funds for this program.

Maximum Award: We will reject any application that proposes a budget exceeding the maximum amount for a single budget period of 12 months, as follows:

Region II: $802,710.

Region III: $796,122.

The Assistant Secretary for Special Education and Rehabilitative Services may change the maximum amount through a notice published in the **Federal Register**.

Note: We are accepting applications that propose to serve Department of Education Regions II and III at this time.

Estimated Number of Awards: 2.

Note: The Department is not bound by any estimates in this notice.

Project Period: Up to 60 months.

III. Eligibility Information

1. *Eligible Applicants:* States and public or nonprofit agencies and organizations, including Indian tribes and institutions of higher education.

2. *Cost Sharing or Matching:* The Secretary has determined that a grantee must provide a match of at least 10 percent of the total cost of the project (34 CFR 389.40).

Note: Under 34 CFR 75.562(c), an indirect cost reimbursement on a training grant is limited to the recipient's actual indirect costs, as determined by its negotiated indirect cost rate agreement, or eight percent of a modified total direct cost base, whichever amount is less. Indirect costs in excess of the eight percent limit may not be charged directly, used to satisfy matching or cost-sharing requirements, or charged to another Federal award.

IV. Application and Submission Information

1. *Address to Request Application Package:* You can obtain an application package via the Internet or from the Education Publications Center (ED Pubs). To obtain a copy via the Internet, use the following address: *http://www.ed.gov/fund/grant/apply/grantapps/index.html.*

To obtain a copy from ED Pubs, write, fax, or call the following: Education Publications Center, P.O. Box 1398, Jessup, MD 20794–1398. Telephone, toll-free: 1–877–433–7827. FAX: (301) 470–1244. If you use a telecommunications device for the deaf (TDD), call, toll-free: 1–877–576–7734.

You can contact ED Pubs at its Web site, also: *www.ed.gov/pubs/edpubs.html* or at its e-mail address: *edpubs@inet.ed.gov.*

If you request an application package from ED Pubs, be sure to identify this program or competition as follows: CFDA number 84.264A.

Individuals with disabilities can obtain a copy of the application package in an alternative format (*e.g.*, Braille, large print, audiotape, or computer diskette) by contacting the person or team listed under *Alternative Format* in section VIII of this notice.

2. *Content and Form of Application Submission:* Requirements concerning the content of an application, together with the forms you must submit, are in the application package for this competition.

Page Limit: The application narrative (Part III of the application) is where you, the applicant, address the selection criteria that reviewers use to evaluate your application. You must limit the application narrative (Part III) to the equivalent of no more than 45 pages, using the following standards:

- A page is 8.5″ by 11″, on one side only, with 1″ margins at the top, bottom, and both sides.
- Double space (no more than three lines per vertical inch) all text in the application narrative, including titles, headings, footnotes, quotations, references, and captions, as well as all text in charts, tables, figures, and graphs.
- Use a font that is either 12 point or larger or no smaller than 10 pitch (characters per inch).
- Use one of the following fonts: Times New Roman, Courier, Courier New, or Arial. An application submitted in any other font (including Times Roman or Arial Narrow) will not be accepted.

The page limit does not apply to Part I, the cover sheet; Part II, the budget section, including the narrative budget justification; Part IV, the assurances and certifications; or the one-page abstract, the resumes, the bibliography, or the letters of support. However, the page limit does apply to all of the application narrative (Part III).

We will reject your application if you exceed the page limit or if you apply other standards and exceed the equivalent of the page limit.

3. *Submission Dates and Times:*

Applications Available: October 20, 2008.

Deadline for Transmittal of Applications: November 19, 2008.

Applications for grants under this competition must be submitted electronically using the Grants.gov Apply site (Grants.gov). For information (including dates and times) about how to submit your application electronically, or in paper format by mail or hand delivery if you qualify for an exception to the electronic submission requirement, please refer to section IV. 6. *Other Submission Requirements* in this notice.

We do not consider an application that does not comply with the deadline requirements.

Individuals with disabilities who need an accommodation or auxiliary aid in connection with the application process should contact the person listed under **FOR FURTHER INFORMATION CONTACT** in section VII in this notice. If the Department provides an accommodation or auxiliary aid to an individual with a disability in connection with the application process, the individual's application remains subject to all other requirements and limitations in this notice.

Deadline for Intergovernmental Review: January 20, 2009.

4. *Intergovernmental Review:* This competition is subject to Executive Order 12372 and the regulations in 34 CFR part 79. Information about Intergovernmental Review of Federal Programs under Executive Order 12372 is in the application package for this competition.

5. *Funding Restrictions:* We reference regulations outlining funding restrictions in the *Applicable Regulations* section in this notice.

6. *Other Submission Requirements:* Applications for grants under this competition must be submitted electronically unless you qualify for an exception to this requirement in accordance with the instructions in this section.

a. *Electronic Submission of Applications.*

Applications for grants under the Rehabilitation Continuing Education Program—Regional Technical Assistance and Continuing Education (TACE) Centers, CFDA Number 84.264A, must be submitted electronically using the Governmentwide Grants.gov Apply site at *http://www.Grants.gov.* Through this site, you will be able to download a copy of the application package, complete it offline, and then upload and submit your application. You may not e-mail an electronic copy of a grant application to us.

We will reject your application if you submit it in paper format unless, as described elsewhere in this section, you qualify for one of the exceptions to the electronic submission requirement *and* submit, no later than two weeks before the application deadline date, a written statement to the Department that you qualify for one of these exceptions. Further information regarding calculation of the date that is two weeks before the application deadline date is provided later in this section under *Exception to Electronic Submission Requirement.*

You may access the electronic grant application for Rehabilitation Continuing Education Program—Regional Technical Assistance and Continuing Education (TACE) Centers at *http://www.Grants.gov.* You must search for the downloadable application package for this competition by the CFDA number. Do not include the CFDA number's alpha suffix in your search (*e.g.*, search for 84.264, not 84.264A).

Please note the following:

- When you enter the Grants.gov site, you will find information about submitting an application electronically through the site, as well as the hours of operation.
- Applications received by Grants.gov are date and time stamped. Your application must be fully uploaded and submitted and must be date and time stamped by the Grants.gov system no later than 4:30:00 p.m., Washington, DC time, on the application deadline date. Except as otherwise noted in this section, we will not accept your application if it is received—that is, date and time stamped by the Grants.gov system—after 4:30:00 p.m., Washington, DC time, on the application deadline date. We do not consider an application that does not comply with the deadline requirements. When we retrieve your application from Grants.gov, we will notify you if we are rejecting your application because it was date and time stamped by the Grants.gov system after 4:30:00 p.m., Washington, DC time, on the application deadline date.
- The amount of time it can take to upload an application will vary depending on a variety of factors, including the size of the application and the speed of your Internet connection. Therefore, we strongly recommend that you do not wait until the application deadline date to begin the submission process through Grants.gov.
- You should review and follow the Education Submission Procedures for submitting an application through Grants.gov that are included in the application package for this competition to ensure that you submit your application in a timely manner to the Grants.gov system. You can also find the Education Submission Procedures pertaining to Grants.gov at *http://e-Grants.ed.gov/help/GrantsgovSubmissionProcedures.pdf.*
- To submit your application via Grants.gov, you must complete all steps in the Grants.gov registration process (see *http://www.grants.gov/applicants/get_registered.jsp*). These steps include (1) registering your organization, a multi-part process that includes registration with the Central Contractor Registry (CCR); (2) registering yourself as an Authorized Organization Representative (AOR); and (3) getting authorized as an AOR by your organization. Details on these steps are outlined in the Grants.gov 3-Step Registration Guide (see *http://www.grants.gov/section910/Grants.govRegistrationBrochure.pdf*). You also must provide on your application the same D–U–N–S Number used with this registration. Please note that the registration process may take five or more business days to complete, and you must have completed all registration steps to allow you to submit successfully an application via Grants.gov. In addition you will need to update your CCR registration on an annual basis. This may take three or more business days to complete.
- You will not receive additional point value because you submit your application in electronic format, nor will we penalize you if you qualify for an exception to the electronic submission requirement, as described elsewhere in this section, and submit your application in paper format.
- You must submit all documents electronically, including all information you typically provide on the following forms: Application for Federal Assistance (SF 424), the Department of Education Supplemental Information for SF 424, Budget Information—Non-Construction Programs (ED 524), and all necessary assurances and certifications. Please note that two of these forms—the SF 424 and the Department of Education Supplemental Information for SF 424—have replaced the ED 424 (Application for Federal Education Assistance).
- You must attach any narrative sections of your application as files in a .DOC (document), .RTF (rich text), or .PDF (Portable Document) format. If you

upload a file type other than the three file types specified in this paragraph or submit a password-protected file, we will not review that material.

• Your electronic application must comply with any page-limit requirements described in this notice.

• After you electronically submit your application, you will receive from Grants.gov an automatic notification of receipt that contains a Grants.gov tracking number. (This notification indicates receipt by Grants.gov only, not receipt by the Department.) The Department then will retrieve your application from Grants.gov and send a second notification to you by e-mail. This second notification indicates that the Department has received your application and has assigned your application a PR/Award number (an ED-specified identifying number unique to your application).

• We may request that you provide us original signatures on forms at a later date.

Application Deadline Date Extension in Case of Technical Issues with the Grants.gov System: If you are experiencing problems submitting your application through Grants.gov, please contact the Grants.gov Support Desk, toll free, at 1–800–518–4726. You must obtain a Grants.gov Support Desk Case Number and must keep a record of it.

If you are prevented from electronically submitting your application on the application deadline date because of technical problems with the Grants.gov system, we will grant you an extension until 4:30:00 p.m., Washington, DC time, the following business day to enable you to transmit your application electronically or by hand delivery. You also may mail your application by following the mailing instructions described elsewhere in this notice.

If you submit an application after 4:30:00 p.m., Washington, DC time, on the application deadline date, please contact the person listed under **FOR FURTHER INFORMATION CONTACT** in section VII in this notice and provide an explanation of the technical problem you experienced with Grants.gov, along with the Grants.gov Support Desk Case Number. We will accept your application if we can confirm that a technical problem occurred with the Grants.gov system and that that problem affected your ability to submit your application by 4:30:00 p.m., Washington, DC time, on the application deadline date. The Department will contact you after a determination is made on whether your application will be accepted.

Note: The extensions to which we refer in this section apply only to the unavailability of, or technical problems with, the Grants.gov system. We will not grant you an extension if you failed to register fully to submit your application to Grants.gov before the application deadline date and time or if the technical problem you experienced is unrelated to the Grants.gov system.

Exception to Electronic Submission Requirement: You qualify for an exception to the electronic submission requirement, and may submit your application in paper format, if you are unable to submit an application through the Grants.gov system because—

• You do not have access to the Internet; or

• You do not have the capacity to upload large documents to the Grants.gov system; *and*

• No later than two weeks before the application deadline date (14 calendar days or, if the fourteenth calendar day before the application deadline date falls on a Federal holiday, the next business day following the Federal holiday), you mail or fax a written statement to the Department, explaining which of the two grounds for an exception prevent you from using the Internet to submit your application.

If you mail your written statement to the Department, it must be postmarked no later than two weeks before the application deadline date. If you fax your written statement to the Department, we must receive the faxed statement no later than two weeks before the application deadline date.

Address and mail or fax your statement to: Christine Marschall, U.S. Department of Education, 400 Maryland Avenue, SW., room 5053, Potomac Center Plaza (PCP), Washington, DC 20202–2800. *FAX:* (202) 245–6824.

Your paper application must be submitted in accordance with the mail or hand delivery instructions described in this notice.

b. *Submission of Paper Applications by Mail.*

If you qualify for an exception to the electronic submission requirement, you may mail (through the U.S. Postal Service or a commercial carrier) your application to the Department. You must mail the original and two copies of your application, on or before the application deadline date, to the Department at the applicable following address: U.S. Department of Education, Application Control Center, Stop 4260, *Attention:* (CFDA Number 84.264A) LBJ Basement Level 1, 400 Maryland Avenue, SW., Washington, DC 20202–4260.

You must show proof of mailing consisting of one of the following:

(1) A legibly dated U.S. Postal Service postmark.

(2) A legible mail receipt with the date of mailing stamped by the U.S. Postal Service.

(3) A dated shipping label, invoice, or receipt from a commercial carrier.

(4) Any other proof of mailing acceptable to the Secretary of the U.S. Department of Education.

If you mail your application through the U.S. Postal Service, we do not accept either of the following as proof of mailing:

(1) A private metered postmark.

(2) A mail receipt that is not dated by the U.S. Postal Service.

If your application is postmarked after the application deadline date, we will not consider your application.

Note: The U.S. Postal Service does not uniformly provide a dated postmark. Before relying on this method, you should check with your local post office.

c. *Submission of Paper Applications by Hand Delivery.*

If you qualify for an exception to the electronic submission requirement, you (or a courier service) may deliver your paper application to the Department by hand. You must deliver the original and two copies of your application by hand, on or before the application deadline date, to the Department at the following address: U.S. Department of Education, Application Control Center, *Attention:* (CFDA Number 84.264A) 550 12th Street, SW., Room 7041, Potomac Center Plaza, Washington, DC 20202–4260.

The Application Control Center accepts hand deliveries daily between 8:00 a.m. and 4:30:00 p.m., Washington, DC time, except Saturdays, Sundays, and Federal holidays.

Note for Mail or Hand Delivery of Paper Applications: If you mail or hand deliver your application to the Department—

(1) You must indicate on the envelope and—if not provided by the Department—in Item 11 of the SF 424 the CFDA number, including suffix letter, if any, of the competition under which you are submitting your application; and

(2) The Application Control Center will mail to you a notification of receipt of your grant application. If you do not receive this notification within 15 business days from the application deadline date, you should call the U.S. Department of Education Application Control Center at (202) 245–6288.

V. Application Review Information

Selection Criteria: The selection criteria for this competition are from 34 CFR 75.210 and 34 CFR 389.30(a), and are listed in the application package.

VI. Award Administration Information

1. *Award Notices:* If your application is successful, we notify your U.S. Representative and U.S. Senators and send you a Grant Award Notice (GAN). We may notify you informally, also.

If your application is not evaluated or not selected for funding, we notify you.

2. *Administrative and National Policy Requirements:* We identify administrative and national policy requirements in the application package and reference these and other requirements in the *Applicable Regulations* section in this notice.

We reference the regulations outlining the terms and conditions of an award in the *Applicable Regulations* section in this notice and include these and other specific conditions in the GAN. The GAN also incorporates your approved application as part of your binding commitments under the grant.

3. *Reporting:* At the end of your project period, you must submit a final performance report, including financial information, as directed by the Secretary. If you receive a multi-year award, you must submit an annual performance report that provides the most current performance and financial expenditure information as directed by the Secretary under 34 CFR 75.118. The Secretary may also require more frequent performance reports under 34 CFR 75.720(c). For specific requirements on reporting, please go to *http://www.ed.gov/fund/grant/apply/appforms/appforms.html.*

4. *Performance Measures:* The Government Performance and Results Act of 1993 (GPRA) directs Federal departments and agencies to improve the effectiveness of their programs by engaging in strategic planning, setting outcome-related goals for programs, and measuring program results against those goals. Performance measures established for the RCEP are the percentage of training participants who report an increase in their knowledge, skills, and abilities. RSA will use these data to assess the performance of the projects funded under this competition. RSA also will convene an independent review panel to evaluate the work of the grantees. The independent review panel will use the following performance measures: (a) The percentage of technical assistance and continuing education services provided by the grantee that are deemed to be of high quality; (b) the percentage of technical assistance and continuing education services provided by the grantee that are deemed to be of high relevance to State vocational rehabilitation (VR) policies or practices; and (c) the percentage of technical assistance and continuing education services provided by the grantee that are deemed to be useful in improving State VR agency policies or practices.

VII. Agency Contact

FOR FURTHER INFORMATION CONTACT: Christine Marschall, U.S. Department of Education, 400 Maryland Avenue, SW., room 5053, PCP, Washington, DC 20202–2800. *Telephone:* (202) 245–7429 or by *e-mail: Christine.Marschall@ed.gov.*

If you use a TDD, call the Federal Relay Service (FRS), toll free, at 1–800–877–8339.

VIII. Other Information

Alternative Format: Individuals with disabilities can obtain this document and a copy of the application package in an alternative format (*e.g.*, Braille, large print, audiotape, or computer diskette) by contacting the Grants and Contracts Services Team, U.S. Department of Education, 400 Maryland Avenue, SW., room 5075, PCP, Washington, DC 20202–2550. *Telephone:* (202) 245–7363. If you use a TDD, call the FRS, toll free, at 1–800–877–8339.

Electronic Access to This Document: You can view this document, as well as all other documents of this Department published in the **Federal Register**, in text or Adobe Portable Document Format (PDF) on the Internet at the following site: *www.ed.gov/news/fedregister.*

To use PDF you must have Adobe Acrobat Reader, which is available free at this site. If you have questions about using PDF, call the U.S. Government Printing Office (GPO), toll free, at 1–888–293–6498; or in the Washington, DC, area at (202) 512–1530.

Note: The official version of this document is the document published in the **Federal Register**. Free Internet access to the official edition of the **Federal Register** and the Code of Federal Regulations is available on GPO Access at: *www.gpoaccess.gov/nara/index.html.*

Dated: October 15, 2008.

William Knudsen,

Deputy Assistant Secretary for Special Education and Rehabilitative Services.

[FR Doc. E8–24925 Filed 10–17–08; 8:45 am]

BILLING CODE 4000–01–P

DEPARTMENT OF ENERGY

Federal Energy Regulatory Commission

Combined Notice of Filings # 1

October 10, 2008.

Take notice that the Commission received the following electric corporate filings:

Docket Numbers: EC09–4–000.
Applicants: Lehman Brothers Commodity Services Inc.
Description: Joint Application for Authorization under Section 203 FPA and Request for Expedited Action and Confidential Treatment.
Filed Date: 10/09/2008.
Accession Number: 20081009–5074.
Comment Date: 5 p.m. Eastern Time on Thursday, October 23, 2008.

Take notice that the Commission received the following electric rate filings:

Docket Numbers: ER03–1316–004.
Applicants: Palama, LLC.
Description: Palama, LLC submits an application for determination of Category 1 Status, and motion to accepting filing out-of-time.
Filed Date: 10/08/2008.
Accession Number: 20081010–0045.
Comment Date: 5 p.m. Eastern Time on Wednesday, October 29, 2008.

Docket Numbers: ER07–1194–001.
Applicants: Castlebridge Energy Group LLC.
Description: Castlebridge Energy Group, LLC submits an amendment to the 8/13/08 filing of Second Substitute First Revised Sheet 1 to FERC Electric Tariff, Original Volume 1, to be effective 8/14/08.
Filed Date: 10/08/2008.
Accession Number: 20081010–0060.
Comment Date: 5 p.m. Eastern Time on Wednesday, October 29, 2008.

Docket Numbers: ER08–799–003.
Applicants: Consolidated Edison Co. of New York, Inc.
Description: Consolidated Edison Co submits revised tariff sheets to its 9/19/08 errata filing.
Filed Date: 10/09/2008.
Accession Number: 20081010–0156.
Comment Date: 5 p.m. Eastern Time on Thursday, October 30, 2008.

Docket Numbers: ER08–1202–002.
Applicants: Huntrise Energy Fund LLC.
Description: Huntrise Energy Fund LLC submits an amendment to its Petition for Acceptance of Initial Tariff, Waivers and Blanket Authority filed on 6/19/08.
Filed Date: 10/08/2008.
Accession Number: 20081009–0098.
Comment Date: 5 p.m. Eastern Time on Wednesday, October 29, 2008.

Docket Numbers: ER08–1304–001.
Applicants: Northeast Utilities Service Company.
Description: Public Service Company of New Hampshire submits an Amended and Restated Design, Engineering, and Procurement for Noble Granite Reliable Wind Park etc Substitute Original Service Agreement IA-NU–11 etc.
Filed Date: 10/09/2008.
Accession Number: 20081010–0142.
Comment Date: 5 p.m. Eastern Time on Thursday, October 30, 2008.

Docket Numbers: ER09–4–001.
Applicants: Krayn Wind LLC.
Description: Krayn Wind LLC's supplemental information to its Petition for Order Accepting Market Based Rate Tariff and Granting Waivers and Blanket Approvals filed on 10/1/08 and Substitute Original Sheet 1 *et al.* to FERC Electric Tariff, Original Volume 1.
Filed Date: 10/09/2008.
Accession Number: 20081010–0141.
Comment Date: 5 p.m. Eastern Time on Thursday, October 20, 2008.

Docket Numbers: ER09–11–001; OA08–13–000.
Applicants: New York Independent System Operator, Inc.
Description: New York Independent System Operator, Inc submits an errata tariff sheet to correct a formatting error that was inadvertently included in its 10/1/08 filing, designated as First Revised Sheet 112F etc.
Filed Date: 10/09/2008.
Accession Number: 20081010–0144.
Comment Date: 5 p.m. Eastern Time on Thursday, October 30, 2008.

Docket Numbers: ER09–14–001.
Applicants: NSTAR Electric Company.
Description: Errata of NSTAR Electric Company's to 10/2/08 rate filing.
Filed Date: 10/06/2008.
Accession Number: 20081006–5082.
Comment Date: 5 p.m. Eastern Time on Monday, October 27, 2008.

Docket Numbers: ER09–38–000.
Applicants: AES Energy Storage, LLC.
Description: AES Energy Storage, LLC submits an application for acceptance of market-based rate tariff & granting of waivers & blanket authorizations; request for shortened comment period, expedited consideration and prior notice waiver.
Filed Date: 10/08/2008.
Accession Number: 20081010–0046.
Comment Date: 5 p.m. Eastern Time on Wednesday, October 29, 2008.

Docket Numbers: ER09–39–000.
Applicants: Southwest Power Pool, Inc.
Description: Southwest Power Pool, Inc submits a compliance filing revising its Open Access Transmission Tariff.
Filed Date: 10/08/2008.
Accession Number: 20081009–0105.
Comment Date: 5 p.m. Eastern Time on Wednesday, October 29, 2008.

Docket Numbers: ER09–40–000.
Applicants: Westar Energy, Inc.
Description: Westar Energy, Inc submits a notice of cancellation of a Supplemental Generation Agreement with the City of Sabetha, Kansas.
Filed Date: 10/08/2008.
Accession Number: 20081009–0104.
Comment Date: 5 p.m. Eastern Time on Wednesday, October 29, 2008.

Docket Numbers: ER09–41–000.
Applicants: Westar Energy, Inc.
Description: Westar Energy, Inc submits a notice of cancellation of a Supplemental Generation Agreement with the City of Holton, Kansas.
Filed Date: 10/08/2008.
Accession Number: 20081009–0100.
Comment Date: 5 p.m. Eastern Time on Wednesday, October 29, 2008.

Docket Numbers: ER09–42–000.
Applicants: Westar Energy, Inc.
Description: Westar Energy, Inc submits a notice of cancellation of a Supplemental Generation Agreement with the City of Minneapolis, Kansas.
Filed Date: 10/08/2008.
Accession Number: 20081009–0099.
Comment Date: 5 p.m. Eastern Time on Wednesday, October 29, 2008.

Docket Numbers: ER09–45–000.
Applicants: American Electric Power Service Corporation.
Description: AEP Operating Companies submits a seventh Revision to the Interconnection and Local Delivery Agreement with Wabash Valley Power Authority.
Filed Date: 10/08/2008.
Accession Number: 20081010–0047.
Comment Date: 5 p.m. Eastern Time on Wednesday, October 29, 2008.

Docket Numbers: ER09–46–000.
Applicants: Quachita Power, LLC.
Description: Quachita Power, LLC submits notice of cancellation of their FERC Electric Tariff, Second Revised Volume 1.
Filed Date: 10/08/2008.
Accession Number: 20081010–0048.
Comment Date: 5 p.m. Eastern Time on Wednesday, October 29, 2008.

Docket Numbers: ER09–50–000.
Applicants: Westar Energy, Inc.
Description: Westar Energy, Inc submits a notice of cancellation of a Supplemental Generation Agreement with the City of Burlingame, Kansas.
Filed Date: 10/09/2008.
Accession Number: 20081010–0152.
Comment Date: 5 p.m. Eastern Time on Thursday, October 30, 2008.

Docket Numbers: ER09–51–000.
Applicants: Westar Energy, Inc.
Description: Westar Energy, Inc submits a notice of cancellation of a Supplemental Generation Agreement with the City of Herington, Kansas.
Filed Date: 10/09/2008.
Accession Number: 20081010–0153.
Comment Date: 5 p.m. Eastern Time on Thursday, October 30, 2008.

Docket Numbers: ER09–52–000.
Applicants: Westar Energy, Inc.
Description: Westar Energy, Inc submits a notice of cancellation of a Supplemental Generation Agreement with the City of Osage City, Kansas.
Filed Date: 10/09/2008.
Accession Number: 20081010–0154.
Comment Date: 5 p.m. Eastern Time on Thursday, October 30, 2008.

Docket Numbers: ER09–53–000.
Applicants: Westar Energy, Inc.
Description: Westar Energy, Inc submits a notice of cancellation of a Supplemental Generation Agreement with the City of Wamego, Kansas.
Filed Date: 10/09/2008.
Accession Number: 20081010–0155.
Comment Date: 5 p.m. Eastern Time on Thursday, October 30, 2008.

Docket Numbers: ER09–55–000.
Applicants: Entergy Services, Inc.
Description: Entergy Services, Inc submits an amended interconnection and operating agreement.
Filed Date: 10/09/2008.
Accession Number: 20081010–0157.
Comment Date: 5 p.m. Eastern Time on Thursday, October 30, 2008.

Docket Numbers: ER09–56–000.
Applicants: Virginia Electric and Power Company.
Description: Virginia Electric and Power Co submits the Revised Generator Interconnection and Operating Agreements.
Filed Date: 10/09/2008.
Accession Number: 20081010–0147.
Comment Date: 5 p.m. Eastern Time on Thursday, October 30, 2008.

Take notice that the Commission received the following open access transmission tariff filings:

Docket Numbers: OA08–20–002.
Applicants: Tampa Electric Company.
Description: Tampa Electric Company submits Substitute Second Revised Sheet 116 to FERC Electric Tariff, Third Revised Volume 4, to be effective 10/7/08 under OA08–20.
Filed Date: 10/09/2008.
Accession Number: 20081010–0143.
Comment Date: 5 p.m. Eastern Time on Thursday, October 30, 2008.

Take notice that the Commission received the following public utility holding company filings:

Docket Numbers: PH09–3–000.
Applicants: GDF SUEZ S.A.

Description: FERC–65A Exemption Notification under PH09–3.

Filed Date: 10/10/2008.

Accession Number: 20081010–5058.

Comment Date: 5 p.m. Eastern Time on Friday, October 31, 2008.

Any person desiring to intervene or to protest in any of the above proceedings must file in accordance with Rules 211 and 214 of the Commission's Rules of Practice and Procedure (18 CFR 385.211 and 385.214) on or before 5 p.m. Eastern time on the specified comment date. It is not necessary to separately intervene again in a subdocket related to a compliance filing if you have previously intervened in the same docket. Protests will be considered by the Commission in determining the appropriate action to be taken, but will not serve to make protestants parties to the proceeding. Anyone filing a motion to intervene or protest must serve a copy of that document on the Applicant. In reference to filings initiating a new proceeding, interventions or protests submitted on or before the comment deadline need not be served on persons other than the Applicant.

The Commission encourages electronic submission of protests and interventions in lieu of paper, using the FERC Online links at *http://www.ferc.gov*. To facilitate electronic service, persons with Internet access who will eFile a document and/or be listed as a contact for an intervenor must create and validate an eRegistration account using the eRegistration link. Select the eFiling link to log on and submit the intervention or protests.

Persons unable to file electronically should submit an original and 14 copies of the intervention or protest to the Federal Energy Regulatory Commission, 888 First St., NE., Washington, DC 20426.

The filings in the above proceedings are accessible in the Commission's eLibrary system by clicking on the appropriate link in the above list. They are also available for review in the Commission's Public Reference Room in Washington, DC. There is an eSubscription link on the Web site that enables subscribers to receive e-mail notification when a document is added to a subscribed dockets(s). For assistance with any FERC Online service, please e-mail *FERCOnlineSupport@ferc.gov* or call (866) 208–3676 (toll free). For TTY, call (202) 502–8659.

Nathaniel J. Davis, Sr.,

Deputy Secretary.

[FR Doc. E8–24823 Filed 10–17–08; 8:45 am]

BILLING CODE 6717–01–P

DEPARTMENT OF ENERGY

Federal Energy Regulatory Commission

Combined Notice of Filings

October 15, 2008.

Take notice that the Commission has received the following Natural Gas Pipeline Rate and Refund Report filings:

Docket Numbers: RP08–272–003.

Applicants: Transcontinental Gas Pipeline Corporation.

Description: Transcontinental Gas Pipe Line Corporation submits Substitute Fifth Revised Sheet 154 et al to FERC Gas Tariff, Third Revised Volume 1.

Filed Date: 10/08/2008.

Accession Number: 20081009–0102.

Comment Date: 5 p.m. Eastern Time on Monday, October 20, 2008.

Docket Numbers: RP08–591–001.

Applicants: Equitrans, L.P.

Description: Equitrans, LP submits the corrected tariff Sheet 316 for inclusion in its FERC Gas Tariff, Original Volume 1.

Filed Date: 10/08/2008.

Accession Number: 20081009–0103.

Comment Date: 5 p.m. Eastern Time on Monday, October 20, 2008.

Docket Numbers: RP09–17–000.

Applicants: Mojave Pipeline Company.

Description: Mojave Gas Company submits Third Revised Sheet 212 to their FERC Gas Tariff, Second Revised Volume 1, to be effective 11/10/08.

Filed Date: 10/10/2008.

Accession Number: 20081014–0094.

Comment Date: 5 p.m. Eastern Time on Wednesday, October 22, 2008.

Docket Numbers: RP09–18–000.

Applicants: Northern Natural Gas Company.

Description: Northern Natural Gas Company submits 12 Revised Sheet 66B.01 to FERC Gas Tariff, Fifth Revised Volume 1, to be effective 10/4/08.

Filed Date: 10/09/2008.

Accession Number: 20081014–0275.

Comment Date: 5 p.m. Eastern Time on Tuesday, October 21, 2008.

Any person desiring to intervene or to protest in any of the above proceedings must file in accordance with Rules 211 and 214 of the Commission's Rules of Practice and Procedure (18 CFR 385.211 and 385.214) on or before 5 p.m. Eastern time on the specified comment date. It is not necessary to separately intervene again in a subdocket related to a compliance filing if you have previously intervened in the same docket. Protests will be considered by the Commission in determining the appropriate action to be taken, but will not serve to make protestants parties to the proceeding. Anyone filing a motion to intervene or protest must serve a copy of that document on the Applicant. In reference to filings initiating a new proceeding, interventions or protests submitted on or before the comment deadline need not be served on persons other than the Applicant.

The Commission encourages electronic submission of protests and interventions in lieu of paper, using the FERC Online links at *http://www.ferc.gov*. To facilitate electronic service, persons with Internet access who will eFile a document and/or be listed as a contact for an intervenor must create and validate an eRegistration account using the eRegistration link. Select the eFiling link to log on and submit the intervention or protests.

Persons unable to file electronically should submit an original and 14 copies of the intervention or protest to the Federal Energy Regulatory Commission, 888 First St., NE., Washington, DC 20426.

The filings in the above proceedings are accessible in the Commission's eLibrary system by clicking on the appropriate link in the above list. They are also available for review in the Commission's Public Reference Room in Washington, DC. There is an eSubscription link on the Web site that enables subscribers to receive e-mail notification when a document is added to a subscribed docket(s). For assistance with any FERC Online service, please e-mail *FERCOnlineSupport@ferc.gov* or call (866) 208–3676 (toll free). For TTY, call (202) 502–8659.

Nathaniel J. Davis, Sr.

Deputy Secretary.

[FR Doc. E8–24886 Filed 10–17–08; 8:45 am]

BILLING CODE 6717–01–P

DEPARTMENT OF ENERGY

Federal Energy Regulatory Commission

Notice of Meeting, Notice of Vote, Explanation of Action Closing Meeting and List of Persons To Attend

October 14, 2008.

The following notice of meeting is published pursuant to Section 3(a) of the Government in the Sunshine Act (Pub. L. 94–409), 5 U.S.C. 552b:

AGENCY HOLDING MEETING: Federal Energy Regulatory Commission.

DATE AND TIME: October 21, 2008, 10 a.m.

PLACE: Room 2C, Commission Meeting Room, 888 First Street, NE., Washington, DC 20426.

STATUS: Closed.

MATTERS TO BE CONSIDERED: Non-Public Investigations and Inquiries, Enforcement Related Matters.

CONTACT PERSON FOR MORE INFORMATION: Kimberly D. Bose, Secretary, Telephone (202) 502–8400.

Chairman Kelliher and Commissioners Kelly, Spitzer, Moeller, and Wellinghoff voted to hold a closed meeting on October 21, 2008. The certification of the General Counsel explaining the action closing the meeting is available for public inspection in the Commission's Public Reference Room at 888 First Street, NE., Washington, DC 20426.

The Chairman and the Commissioners, their assistants, the Commission's Secretary, the General Counsel and members of her staff, and a stenographer are expected to attend the meeting. Other staff members from the Commission's program offices who will advise the Commissioners in the matters discussed will also be present.

Kimberly D. Bose,

Secretary.

[FR Doc. E8–24816 Filed 10–17–08; 8:45 am]

BILLING CODE 6717–01–P

DEPARTMENT OF ENERGY

Southwestern Power Administration

Integrated System Rate Schedule Changes

AGENCY: Southwestern Power Administration, DOE.

ACTION: Notice of Proposed Changes to Southwestern Power Administration Rate Schedules and Opportunity for Public Review and Comment.

SUMMARY: The Administrator, Southwestern Power Administration (Southwestern), has determined that revisions to the Real Power Losses provisions within existing rate schedules P–06 and NFTS–06 are required. The Federal Energy Regulatory Commission (FERC) confirmed and approved such rates on February 27, 2007 in Docket No. EF07–4011–000 (118 FERC ¶62,162) for the period from October 1, 2006 through September 30, 2010. Since the proposed rate schedule revisions are limited only to Real Power Losses, the net result of the 2006 Integrated System Power Repayment Studies, which was the basis for the existing rate schedules, will not be altered.

Southwestern held several meetings during FY 2008 with customers to discuss the proposed rate schedule revisions and provide opportunity for input in the development of the final rate schedules. As a result of these informal meetings, it was determined that the revised rate schedule provisions can provide cost-savings and operational benefits to Southwestern's transmission customers and are consistent with (FERC) Order No. 888.

DATES: The consultation and comment period will begin on the date of publication of this **Federal Register** notice and will end November 19, 2008.

FOR FURTHER INFORMATION CONTACT: Mr. James K. McDonald, Assistant Administrator, Office of Corporate Operations, Southwestern Power Administration, U.S. Department of Energy, One West Third Street, Tulsa, Oklahoma 74103, (918) 595–6690, *jim.mcdonald@swpa.gov.*

SUPPLEMENTARY INFORMATION: The U.S. Department of Energy (DOE) was created by an Act of the U.S. Congress, Department of Energy Organization Act, Pub. L. 95–91, dated August 4, 1977. Southwestern's power marketing activities were transferred from the Department of Interior to the DOE, effective October 1, 1977. Guidelines for preparation of power repayment studies are included in DOE Order No. RA 6120.2 entitled Power Marketing Administration Financial Reporting. Procedures for Public Participation in Power and Transmission Rate Adjustments of the Power Marketing Administrations are found at Title 10, part 903, Subpart A of the Code of Federal Regulations (10 CFR 903). Procedures for the confirmation and approval of rates for the Federal Power Marketing Administrations are found at Title 18, part 300, Subpart L of the Code of Federal Regulations (18 CFR 300).

Southwestern markets power from 24 multi-purpose reservoir projects, with hydroelectric power facilities constructed and operated by the U.S. Army Corps of Engineers. These projects are located in the states of Arkansas, Missouri, Oklahoma, and Texas. Southwestern's marketing area includes these states plus Kansas and Louisiana. The costs associated with the hydropower facilities of 22 of the 24 projects are repaid via revenues received under the Integrated System rates, as are Southwestern's transmission facilities that consist of 1,380 miles of high-voltage transmission lines, 24 substations, and 46 microwave and VHF radio sites. Costs associated with the Robert D. Willis and Sam Rayburn Dams, two projects that are isolated hydraulically, electrically, and financially from the Integrated System are repaid by separate rate schedules.

Current and Proposed Real Power Losses Provisions

The current P–06 and NFTS–06 rate schedules determine the annual rate for real power losses based upon the average of Southwestern's actual costs for the purchase of energy to replace real power losses during the previous Fiscal Year (October through September), as reflected in Southwestern's financial records. Customers have the option to either purchase losses from Southwestern or elect, on an annual basis, to self-provide their respective loss energy subject to certain conditions. Customers who purchase loss energy from Southwestern are assessed a monthly charge equal to the product of Southwestern's then-effective rate for Real Power Losses and a quantity of energy equal to four (4) percent of the total non-Federal energy transmitted by Southwestern on behalf of each such customer during that month.

Beginning January 1, 2009, Southwestern is proposing to implement revised real power loss provisions, as specified in Southwestern's proposed P–06A and NFTS–06A rate schedules, which will require that all real power losses associated with deliveries of non-Federal energy transmitted by Southwestern must be scheduled and delivered (self-supplied) to Southwestern by customers during the second month after such real power losses were incurred by Southwestern. Southwestern will determine the amount of real power losses associated with non-Federal energy transmitted on behalf of each customer in the same manner specified in the previous P–06 and NFTS–06 rate schedules and provide a written schedule setting forth the delivery rate and total quantity of real power loss energy to be delivered back to Southwestern. Should a customer fail to return the total quantity of real power loss energy to Southwestern, according to the schedule provided during the month in which such loss energy is due, the customer will be invoiced and obligated to purchase, at the rate stipulated in the P–06A and NFTS–06A rate schedules, the quantity of loss energy the customer failed to return to Southwestern.

P–06 and NFTS–06 Rate Schedule Revisions

In developing the revised real power losses rate schedule provisions, the titles of the P–06 and NFTS–06 rate

schedules were changed to P–06A and NFTS–06A respectively to reflect the fact that revisions have been made. In addition to replacing the section entitled ''Rates for Real Power Losses'' within each rate schedule, minor corrections and modifications were incorporated to clarify and update any sections of the rate schedules containing references to real power losses. Redlined versions of rate schedules P–06 and NFTS–06, which show revisions proposed by rate schedules P–06A and NFTS–06A, will be made available upon request. To request a copy, please contact Scott Carpenter *(scott.carpenter@swpa.gov)* at 918–595–6694 or Stephanie Bradley *(stephanie.bradley@swpa.gov)* at 918–595–6676. Southwestern will implement the revised P–06A and NFTS–06A rate schedule language and provisions upon the Deputy Secretary's interim approval.

The Administrator has determined that written comments will provide adequate opportunity for public participation in the rate schedule revision process. Therefore, an opportunity is presented for interested parties to submit written comments on the proposed rate schedule changes. Written comments are due on or before November 19, 2008. Written comments should be submitted to Mr. James K. McDonald, Assistant Administrator, Office of Corporate Operations, Southwestern Power Administration, U.S. Department of Energy, One West Third Street, Tulsa, Oklahoma 74103, (918) 595–6690, *jim.mcdonald@swpa.gov.*

Following review and consideration of written comments, the Administrator will finalize and submit the proposed rate schedules to the Deputy Secretary of Energy for confirmation and approval on an interim basis, and subsequently to the FERC for confirmation and approval on a final basis. The FERC will allow the public an opportunity to provide written comments on the proposed rate schedule change before making a final decision.

Dated: October 9, 2008.

Jon C. Worthington,

Administrator.

United States Department of Energy

Southwestern Power Administration

Rate Schedule NFTS–06A [1]; Wholesale Rates for Non-Federal Transmission/ Interconnection Facilities Service

Effective: During the period January 1, 2009, through September 30, 2010, in accordance with Federal Energy Regulatory Commission order issued_____, Docket No. _____.

Available: In the region where Southwestern Power Administration (Southwestern) owns and operates high-voltage transmission lines and related facilities, and/or has contractual rights to such transmission facilities owned by others (System of Southwestern).

Applicable: To Customers which have executed Service Agreements with Southwestern for the transmission of non-Federal power and energy over the System of Southwestern or for its use for interconnections. Southwestern will provide services over those portions of the System of Southwestern in which the Administrator, Southwestern, in his or her sole judgment, has determined that uncommitted transmission and transformation capacities in the System of Southwestern are and will be available in excess of the capacities required to market Federal power and energy pursuant to Section 5 of the Flood Control Act of 1944 (58 Stat. 887,890; 16 U.S.C. 825s).

Character and Conditions of Service: Service will be provided as 3-phase, alternating current, at approximately 60 Hertz, and at the voltage level of the point(s) specified by Service Agreement or Transmission Service Transaction.

Definitions of Terms:

A ''*Customer*'' is the entity which is utilizing and/or purchasing services from Southwestern pursuant to this rate schedule.

A ''*Service Agreement*'' is a contract executed between a Customer and Southwestern for the transmission of non-Federal power and energy over the System of Southwestern or for interconnections. Service Agreements include:

''*Firm Transmission Service Agreements*'' that provide for reserved transmission capacity on a firm basis, for a particular point-to-point delivery path.

''*Non-Firm Transmission Service Agreements*'' that provide for the Customer to request transmission service on a non-firm basis.

''*Network Transmission Service Agreements*'' that provide for the Customer to request firm transmission service for the delivery of capacity and energy from the Customer's network resources to the Customer's network load, for a period of one year or more.

''*Interconnection Agreements*'' that provide for the use of the System of Southwestern and recognize the exchange of mutual benefits for such use or provide for application of a charge for Interconnection Facilities Service.

A ''*Service Request*'' is made under a Transmission Service Agreement through the Southwest Power Pool, Inc. (SPP) Open Access Same-Time Information System (OASIS) for reservation of transmission capacity over a particular point-to-point delivery path for a particular period. When a Service Request is approved by SPP, it becomes a ''*Transmission Service Transaction.*'' The Customer must submit hourly schedules for actual service in addition to the Service Request.

''*Firm Point-to-Point Transmission Service*'' is transmission service reserved on a firm basis between specific points of receipt and delivery pursuant to either a Firm Transmission Agreement or to a Transmission Service Transaction. ''*Non-Firm Point-to-Point Transmission Service*'' is transmission service reserved on a non-firm basis for specific points of receipt and delivery pursuant to a Transmission Service Transaction. ''*Network Integration Transmission Service*'' is transmission service provided under Part III of Southwestern's Open Access Transmission Service Tariff which provides the Customer with firm transmission service for the delivery of capacity and energy from the Customer's resources to the Customer's load.

''*Secondary Transmission Service*'' is associated with Firm Point-to-Point Transmission Service and Network Integration Transmission Service. For Firm Point-to-Point Transmission Service, it consists of transmission service provided on an as-available, non-firm basis, scheduled within the limits of a particular capacity reservation for transmission service, and scheduled from points of receipt, or to points of delivery, other than those designated in a Long-Term Firm Transmission Agreement or a Transmission Service Transaction for Firm Point-to-Point Transmission Service. For Network Integration Transmission Service, Secondary Transmission Service consists of transmission service provided on an as-available, non-firm basis, from resources other than the Network Resources designated in a Network Transmission Service Agreement, to meet the Customer's Network Load. The charges for Secondary Transmission Service, other than Ancillary Services, are included in the applicable capacity charges for Firm Point-to-Point Transmission Service and Network Integration Transmission Service.

[1] Supersedes Rate Schedule NFTS–06.

The ''*Demand Period*'' used to determine a maximum integrated rate of delivery for the purposes of power accounting is the 60-minute period which begins with the change of hour. The term ''*Peak Demand*'' means the highest rate of delivery, in kilowatts, for any Demand Period during a particular month, at any particular point of delivery or interconnection.

For the purposes of this rate schedule, the term ''*Point of Delivery*'' is used to mean either a single physical point to which electric power and energy are delivered from the System of Southwestern, or a specified set of delivery points which together form a single, electrically integrated load. Peak Demand for such set of points is computed as the coincidental highest rate of delivery among the specified points rather than as the sum of peak demands for each individual physical point.

''*Ancillary Services*'' are those services necessary to support the transmission of capacity and energy from resources to loads while maintaining reliable operation of the System of Southwestern in accordance with good utility practice. Ancillary Services include:

''*Scheduling, System Control, and Dispatch Service*'' is provided by Southwestern as Control Area operator and is in regard to interchange and load-match scheduling and related system control and dispatch functions.

''*Reactive Supply and Voltage Control from Generation Sources Service*'' is provided at transmission facilities in the System of Southwestern to produce or absorb reactive power and to maintain transmission voltages within specific limits.

''*Regulation and Frequency Response Service*'' is the continuous balancing of generation and interchange resources accomplished by raising or lowering the output of on-line generation as necessary to follow the moment-by-moment changes in load and to maintain frequency within a Control Area.

''*Spinning Operating Reserve Service*'' maintains generating units on-line, but loaded at less than maximum output, which may be used to service load immediately when disturbance conditions are experienced due to a sudden loss of generation or load.

''*Supplemental Operating Reserve Service*'' provides an additional amount of operating reserve sufficient to reduce Area Control Error to zero within 10 minutes following loss of generating capacity which would result from the most severe single contingency.

''*Energy Imbalance Service*'' corrects for differences over a period of time between schedules and actual hourly deliveries of energy to a load.

''*Interconnection Facilities Service*'' provides for the use of the System of Southwestern to deliver energy and/or provide system support at an interconnection.

Rates for Firm Point-to-Point Transmission Service:

Capacity Charges for Firm Transmission Service:

	10/1/2006–9/30/2008	10/1/2008–9/30/2010
Monthly	$0.90 per kilowatt of transmission capacity reserved in increments of one month of service or invoiced in accordance with a longer term agreement.	$0.95 per kilowatt of transmission capacity reserved in increments of one month of service or invoiced in accordance with a longer term agreement.
Weekly	$0.225 per kilowatt of transmission capacity reserved in increments of one week of service.	$0.238 per kilowatt of transmission capacity reserved in increments of one week of service.
Daily	$0.0409 per kilowatt of transmission capacity reserved in increments of one day of service.	$0.0432 per kilowatt of transmission capacity reserved in increments of one day of service.

Service Associated with Capacity Charges for Firm Point-to-Point Transmission Service: The capacity charge for firm transmission service includes Secondary Transmission Service, but does not include charges for Ancillary Services associated with actual schedules.

Application of Capacity Charges for Firm Point-to-Point Transmission Service: Capacity charges for firm transmission service are applied to quantities reserved by contract under a Firm Transmission Agreement or in accordance with a Transmission Service Transaction.

Customers, unless otherwise specified by contract, will be charged on the greatest of (1) The Peak Demand at any particular point of delivery during a particular month, rounded up to the nearest whole megawatt, or (2) the highest Peak Demand recorded at such point of delivery during any of the previous 11 months, rounded up to the nearest whole megawatt, or (3) the capacity reserved by contract; which amount shall be considered such Customer's reserved capacity. Secondary Transmission Service for such Customers shall be limited during any month to the most recent Peak Demand on which a particular Customer is billed or to the capacity reserved by contract, whichever is greater.

Rates for Non-Firm Point-to-Point Transmission Service:

Capacity Charges for Non-Firm Transmission Service:

Monthly: 80 percent of the firm monthly charge of transmission capacity reserved in increments of one month of service.

Weekly: 80 percent of the firm monthly charge divided by 4 of transmission capacity reserved in increments of one week of service.

Daily: 80 percent of the firm monthly charge divided by 22 of transmission capacity reserved in increments of one day of service.

Hourly: 80 percent of the firm monthly charge divided by 352 of transmission capacity reserved in increments of one hour of service.

Application of Charges for Non-Firm Point-to-Point Transmission Service: Capacity charges for Non-Firm Transmission Service are applied to quantities reserved under a Transmission Service Transaction, and do not include charges for Ancillary Services.

Rates for Network Integration Transmission Service:

Annual Revenue Requirement for Network Integration Service:

10/1/2006–9/30/2008	10/1/2008–9/30/2010
$9,155,900	$9,431,500

Monthly Revenue Requirement for Network Integration Service:

10/1/2006–9/30/2008	10/1/2008–9/30/2010
$762,992	$785,958

Net Capacity Available for Network Integration Service:

10/1/2006–9/30/2008	10/1/2008–9/30/2010
845,000 kilowatts	828,000 kilowatts.

Capacity Charge for Network Integration Transmission Service:

10/1/2006–9/30/2008	10/1/2008–9/30/2010
$0.90 per kilowatt of Network Load ($762,992/845,000 kilowatts).	$0.95 per kilowatt of Network Load ($785,958/828,000 kilowatts).

Application of Charge for Network Integration Transmission Service: Network Integration Transmission Service is available only for deliveries of non-Federal power and energy, and is applied to the Customer utilizing such service exclusive of any deliveries of Federal power and energy. The capacity on which charges for any particular Customer utilizing this service is determined on the greatest of (1) the Peak Demand at any particular point of delivery during a particular month, rounded up to the nearest whole megawatt, or (2) the highest Peak Demand recorded at such point of delivery during any of the previous 11 months, rounded up to the nearest whole megawatt.

For those Customers taking Network Integration Transmission Service who are also taking delivery of Federal Power and Energy, the Peak Demand shall be determined by subtracting the energy scheduled for delivery of Federal Power and Energy for any hour from the metered demand for such hour.

Secondary transmission Service for such Customers shall be limited during any month to the most recent Peak Demand on which a particular Customer is billed. Charges for Ancillary Services shall also be assessed.

Real Power Losses

Customers are required to self-provide all Real Power Losses for non-Federal energy transmitted by Southwestern on behalf of such Customers under the provisions detailed below.

Real Power Losses are computed as four (4) percent of the total amount of non-Federal energy transmitted by Southwestern. The Customer's Monthly Real Power Losses are computed each month on a megawatthour basis as follows:

$$ML = .04 \times NFE$$

with the factors defined as follows:

ML = The total monthly loss energy, rounded to the nearest megawatthour, to be scheduled by a Customer for receipt by Southwestern for Real Power Losses associated with non-Federal energy transmitted on behalf of such Customer; and

NFE = The amount of non-Federal energy that was transmitted by Southwestern on behalf of a Customer during a particular month.

The Customer must schedule or cause to be scheduled to Southwestern, Real Power Losses for which it is responsible subject to the following conditions:

(1) The Customer shall schedule and deliver Real Power Losses back to Southwestern during the second month after they were incurred by Southwestern in the transmission of the Customer's non-Federal power and energy over the System of Southwestern.

(2) On or before the twentieth day of each month, Southwestern shall determine the amount of non-Federal loss energy it provided on behalf of the Customer during the previous month and provide a written schedule to the Customer setting forth hour-by-hour the quantities of non-Federal energy to be delivered to Southwestern as losses during the next month.

(3) Real Power Losses not delivered to Southwestern by the Customer, according to the schedule provided, during the month in which such losses are due shall be billed by Southwestern to the Customer to adjust the end-of-month loss energy balance to 0 megawatthours and the Customer shall be obliged to purchase such energy at the following rates:

Months associated with charge	Rate per kilowatthour
March, April, May, October, November, December	$0.15
January, February, June, July, August, September	$0.30

(6) Real Power Losses delivered to Southwestern by the Customer in excess of the losses due during the month shall be purchased by Southwestern from the Customer at a rate per megawatthour equal to Southwestern's rate per megawatthour for Supplemental Peaking Energy, as set forth in Southwestern's then-effective Rate Schedule for hydro peaking power to adjust such hourly end-of-month loss energy balance to 0 megawatthours.

Monthly Capacity Charges for Transformation Service: A charge of $0.30 per kilowatt will be assessed for capacity used to deliver energy at any point of delivery at which Southwestern provides transformation for deliveries at voltages of 69 kilovolts or less from higher voltage facilities.

Application of Capacity Charges for Transformation Service: For any particular month, charges for transformation service will be assessed on the greater of (1) that month's actual Peak Demand, or (2) the highest Peak Demand recorded during the previous 11 months. For the purpose of this rate schedule, the Peak Demand will be based on all deliveries, of both Federal and non-Federal energy, from the System of Southwestern, at such point during such month.

Rates for Ancillary Services:

Capacity Charges for Ancillary Services Associated With Transmission Services:

(a) Scheduling, System Control, and Dispatch Service:

	10/1/2006–9/30/2008	10/1/2008–9/30/2010
Monthly:	$0.06 per kilowatt of transmission capacity reserved in increments of one month of service or invoiced in accordance with a Long-Term Firm Transmission Agreement or Network Transmission Service Agreement.	$0.06 per kilowatt of transmission capacity reserved in increments of one month of service or invoiced in accordance with a Long-Term Firm Transmission Agreement or Network Transmission Service Agreement.
Weekly:	$0.015 per kilowatt of transmission capacity reserved in increments of one week of service.	$0.015 per kilowatt of transmission capacity reserved in increments of one week of service.
Daily:	$0.0027 per kilowatt of transmission capacity reserved in increments of one day of service.	$0.0027 per kilowatt of transmission capacity reserved in increments of one day of service.
Hourly:	$0.00017 per kilowatt of energy delivered as non-firm transmission service.	$0.00017 per kilowatt of energy delivered as non-firm transmission service.

(b) Reactive Supply and Voltage Control from Generation Sources Service:

	10/1/2006–9/30/2008	10/1/2008–9/30/2010
Monthly: ...	$0.03 per kilowatt of transmission capacity reserved in increments of one month of service or invoiced in accordance with a Long-Term Firm Transmission Agreement or Network Transmission Service Agreement.	$0.04 per kilowatt of transmission capacity reserved in increments of one month of service or invoiced in accordance with a Long-Term Firm Transmission Agreement or Network Transmission Service Agreement.
Weekly:	$0.008 per kilowatt of transmission capacity reserved in increments of one week of service.	$0.010 per kilowatt of transmission capacity reserved in increments of one week of service.
Daily:	$0.0014 per kilowatt of transmission capacity reserved in increments of one day of service.	$0.0018 per kilowatt of transmission capacity reserved in increments of one day of service.
Hourly:	$0.00009 per kilowatt of energy delivered as non-firm transmission service.	$0.00011 per kilowatt of energy delivered as non-firm transmission service.

(c) Regulation and Frequency Response Service:

	10/1/2006–9/30/2008	10/1/2008–9/30/2010
Monthly: ...	$0.08 per kilowatt of transmission capacity reserved in increments of one month of service or invoiced in accordance with a Long-Term Firm Transmission Agreement or Network Transmission Service Agreement.	$0.09 per kilowatt of transmission capacity reserved in increments of one month of service or invoiced in accordance with a Long-Term Firm Transmission Agreement or Network Transmission Service Agreement.
Weekly:	$0.020 per kilowatt of transmission capacity reserved in increments of one week of service.	$0.023 per kilowatt of transmission capacity reserved in increments of one week of service.
Daily:	$0.0036 per kilowatt of transmission capacity reserved in increments of one day of service.	$0.0041 per kilowatt of transmission capacity reserved in increments of one day of service.
Hourly:	$0.00023 per kilowatt of energy delivered as non-firm transmission service.	$0.00026 per kilowatt of energy delivered as non-firm transmission service.

(d) Spinning Operating Reserve Service:

	10/1/2006–9/30/2008	10/1/2008–9/30/2010
Monthly: ...	$0.0079 per kilowatt of transmission capacity reserved in increments of one month of service or invoiced in accordance with a Long-Term Firm Transmission Agreement or Network Transmission Service Agreement.	$0.0092 per kilowatt of transmission capacity reserved in increments of one month of service or invoiced in accordance with a Long-Term Firm Transmission Agreement or Network Transmission Service Agreement.
Weekly:	$0.00198 per kilowatt of transmission capacity reserved in increments of one week of service.	$0.0023 per kilowatt of transmission capacity reserved in increments of one week of service.
Daily:	$0.00036 per kilowatt of transmission capacity reserved in increments of one day of service.	$0.00042 per kilowatt of transmission capacity reserved in increments of one day of service.
Hourly:	$0.00002 per kilowatt of energy delivered as non-firm transmission service.	$0.00003 per kilowatt of energy delivered as non-firm transmission service.

(e) Supplemental Operating Reserve Service:

	10/1/2006–9/30/2008	10/1/2008–9/30/2010
Monthly: ...	$0.0079 per kilowatt of transmission capacity reserved in increments of one month of service or invoiced in accordance with a Long-Term Firm Transmission Agreement or Network Transmission Service Agreement.	$0.0092 per kilowatt of transmission capacity reserved in increments of one month of service or invoiced in accordance with a Long-Term Firm Transmission Agreement or Network Transmission Service Agreement.
Weekly:	$0.00198 per kilowatt of transmission capacity reserved in increments of one week of service.	$0.0023 per kilowatt of transmission capacity reserved in increments of one week of service.
Daily:	$0.00036 per kilowatt of transmission capacity reserved in increments of one day of service.	$0.00042 per kilowatt of transmission capacity reserved in increments of one day of service.
Hourly:	$0.00002 per kilowatt of energy delivered as non-firm transmission service.	$0.00003 per kilowatt of energy delivered as non-firm transmission service.

(f) Energy Imbalance Service: $0.0 per kilowatt for all periods of reservation.

Availability of Ancillary Services: Ancillary Services (a) and (b) are available for all transmission services in and from the System of Southwestern and shall be provided by Southwestern. Ancillary Services (c) and (f) listed above are available only for deliveries of power and energy serving load within Southwestern's Control Area and shall be provided by Southwestern, unless, subject to Southwestern's approval, they are provided by others. Ancillary Services (d) and (e) are available only for deliveries of power and energy generated by resources located within Southwestern's Control Area and shall

be provided by Southwestern, unless, subject to Southwestern's approval, they are provided by others.

Application of Ancillary Services Charges: Charges for all Ancillary Services are applied to the reserved or network transmission service taken by the Customer in accordance with the rates listed above when such services are provided by Southwestern.

The charges for Ancillary Services are considered to include Ancillary Services for any Secondary Transmission Service, except in cases where Ancillary Services (c) through (f) are applicable to a Secondary Transmission Service transaction, but are not applicable to the firm capacity reservation under which Secondary Transmission Service is provided. When charges for Ancillary Services are applicable to Secondary Transmission Service, the charge for the Ancillary Service shall be the hourly rate applied to all energy transmitted utilizing the Secondary Transmission Service.

Provision of Ancillary Services by Others: Customers for which Ancillary Services (c) through (f) are made available as specified above must inform Southwestern by written notice of the Ancillary Services which they do not intend to take and purchase from Southwestern, and their election to provide all or part of such Ancillary Services from their own resources or a third party.

Subject to Southwestern's approval of the ability of such resources or third parties to meet Southwestern's technical requirements for provision of such Ancillary Services, the customer may change the Ancillary Services which it takes from Southwestern and/or from other sources at the beginning of any month upon the greater of 60 days written notice or upon the completion of any necessary equipment modifications necessary to accommodate such change. Such notice requirements also apply to requests for Southwestern to provide Ancillary Services when such services are available as specified above.

Limitations on Energy Imbalance Service: Energy Imbalance Service is authorized for use only within a bandwidth of ± 1.5 percent of the actual requirements of the load at a particular point of delivery, for any hour, compared to the resources scheduled to meet such load during such hour. Deviations which are greater than ± 1.5 percent, but which are less than ± 2,000 kilowatts, are considered to be within the authorized bandwidth. Deviations outside the authorized bandwidth are subject to a Capacity Overrun Penalty.

Energy delivered or received within the authorized bandwidth for this service is accounted for as an inadvertent flow and will be netted against flows in the future. The inadvertent flow in any given hour will only be offset with the flows in the corresponding hour of a day in the same category. The two categories of days are weekdays and weekend days/North American Electric Reliability Council holidays. This process will result in a separate inadvertent accumulation for each hour of the two categories of days. The hourly accumulations in the current month will be added to the hourly inadvertent balances from the previous month, resulting in a month-end balance for each hour.

The Customer is required to adjust the scheduling of resources in such a way as to reduce the accumulation towards zero. It is recognized that the inadvertent hourly flows can be both negative and positive, and that offsetting flows should deter a significant accumulation of inadvertent. In the event any hourly month-end balance exceeds 12 MWHs, the excess will be subject to the *Application of Capacity Overrun Penalty* or the *Unauthorized Use of Energy Imbalance Service by Overscheduling of Resources* provisions, depending on the direction of the accumulation.

Application of Capacity Overrun Penalty: Customers who receive deliveries within Southwestern's Control Area are obligated to provide resources sufficient to meet their loads. Such obligation is not related to the amount of transmission capacity that such Customers may have reserved for transmission service to a particular load. Customers whose resources are scheduled by Southwestern are not subject to this provision. In the event that a Customer under schedules its resources to meet its load, resulting in a difference between resources and actual metered load (adjusted for transformer losses as applicable) outside the authorized bandwidth for Energy Imbalance Service for any hour, then such Customer is subject to the following penalty:

Capacity Overrun Penalty

For each hour during which energy flows outside the authorized bandwidth, the Customer will be obliged to purchase such energy at the following rates:

Months associated with charge	Rate per kilowatt
March, April, May, October, November, December	$0.15
January, February, June, July, August, September	$0.30

Unauthorized Use of Energy Imbalance Service by Overscheduling of Resources: In the event that a Customer schedules greater resources than are needed to meet its load, such that energy flows at rates beyond the authorized bandwidth for the use of Energy Imbalance Service, Southwestern retains such energy at no cost to Southwestern and with no obligation to return such energy. Customers whose resources are scheduled by Southwestern are not subject to this provision.

Application of Charge for Interconnection Facilities Service: Any Customer that requests an interconnection from Southwestern which, in Southwestern's sole judgment and at its sole option, does not provide commensurate benefits or compensation to Southwestern for the use of its facilities shall be assessed a capacity charge for Interconnection Facilities Service. For any month, charges for Interconnection Facilities Service shall be assessed on the greater of (1) that month's actual Peak Demand, or (2) the highest Peak Demand recorded during the previous eleven months, as metered at the interconnection. The use of Interconnection Facilities Service will be subject to power factor provisions as specified in this rate schedule. The interconnection customer shall also schedule and deliver Real Power Losses pursuant to the provisions of this Rate Schedule based on metered flow through the interconnection where Interconnection Facilities Services is assessed.

Rate for Interconnection Facilities Service: The monthly capacity charge for Interconnection Facilities Service:

10/1/2006–9/30/2008	10/1/2008–9/30/2010
$0.90 per kilowatt	$0.95 per kilowatt

Requirements Related to Power Factor: Any Customer served from facilities owned by or available by contract to Southwestern will be required to maintain a power factor of not less than 95 percent and will be subject to the following provisions.

Determination of Power Factor: The power factor will be determined for all Demand Periods and shall be calculated under the formula:

$$PF = kWh \div \sqrt{\left(kWh^2 + rkVAh^2\right)},$$

with the factors defined as follows:

PF = the power factor for any Demand Period of the month.

kWh = the total quantity of energy which is delivered during such Demand Period to the point of delivery or interconnection.

rkVAh = the total quantity of reactive kilovolt-ampere-hours (kvars) delivered during such Demand Period to the point of delivery or interconnection.

Power Factor Penalty and Assessment: The Customer shall be assessed a penalty for all Demand Periods of a month where the power factor is less than 95 percent lagging. For any Demand Period during a particular month such penalty shall be in accordance with the following formula:

$C = D \times (.95 – LPF) \times \$0.10$

with the factors defined as follows:

C = The charge in dollars to be assessed for any particular Demand Period of such month that the Determination of Power Factor ''PF'' is calculated to be less than 95 percent lagging.

D = The Customer's demand in kilowatts at the point of delivery for such Demand Period in which a low power factor was calculated.

LPF = The lagging power factor, if any, determined by the formula ''PF'' for such Demand Period.

If C is negative, then C = zero (0).

Application of Power Factor Penalty: The Power Factor Penalty is applicable to radial interconnections with the System of Southwestern. The total Power Factor Penalty for any month shall be the sum of all charges ''C'' for all Demand Periods of such month. No penalty is assessed for leading power factor. Southwestern, in its sole judgment and at its sole option, may determine whether power factor calculations should be applied to a single physical point of delivery or to multiple physical points of delivery where a Customer has a single, electrically integrated load served through multiple points or interconnections. The general criteria for such decision shall be that, given the configuration of the Customer's and Southwestern's systems, Southwestern will determine, in its sole judgment and at its sole option, whether the power factor calculation more accurately assesses the detrimental impact on Southwestern's system when the above formula is calculated for a single physical point of delivery or for a combination of physical points or for an interconnection as specified by an Interconnection Agreement.

Southwestern, at its sole option, may reduce or waive power factor penalties when, in Southwestern's sole judgment, low power factor conditions were not detrimental to the System of Southwestern due to particular loading and voltage conditions at the time the power factor dropped below 95 percent lagging.

[FR Doc. E8–24868 Filed 10–17–08; 8:45 am]

BILLING CODE 6450–01–P

ENVIRONMENTAL PROTECTION AGENCY

[FRL–8731–4]

Proposed Agreement and Covenant Not To Sue Pursuant to the Comprehensive Environmental Response, Compensation, and Liability Act; In Re: Elizabeth Mine Superfund Site, Located in Strafford and Thetford, VT

AGENCY: Environmental Protection Agency.

ACTION: Notice of proposed agreement; request for public comment.

SUMMARY: In accordance with the Comprehensive Environmental Response, Compensation, and Liability Act, as amended (''CERCLA''), 42 U.S.C. 9601, *et seq.,* notice is hereby given of a proposed Agreement and Covenant Not to Sue between the United States, on behalf of the U.S. Environmental Protection Agency (''EPA''), the Vermont Agency of Natural Resources (''ANR'') and Settling Parties Theodore Zageski, the Estate of Leonard Cook, and the Elizabeth Mine Corporation (collectively ''Settling Parties'').

This proposed Agreement includes a Covenant Not to Sue by the United States under sections 106 and 107(a) of CERCLA, 42 U.S.C. 9606 and 9607(a), and section 7003 of the Resource Conservation and Recovery Act, as amended (''RCRA''), 42 U.S.C. 6973; and a Covenant Not to Sue by the Vermont Agency of Natural Resources under section 107(a) of CERCLA, 42 U.S.C. 9607(a), and 10 V.S.A 6615.

In the proposed Agreement, the Settling Parties have agreed to give the Environmental Protection Agency permission to remove and use earthen material such as rock and/or soil overburden materials such as topsoil, sand, silt, clay, gravel, cobbles, and boulders located on land owned by them for use in implementing response actions at the Elizabeth Mine Superfund Site. In addition, the Settling Parties will record a Notice with the Towns of Strafford and Thetford, Vermont that the property is subject to a CERCLA response action and record a Grant of Environmental Restrictions, Right of Access and Easement under the proposed Agreement.

For thirty (30) days following the date of publication of this Notice, the Agency will receive written comments relating to the settlement. The Agency will consider all comments received and may modify or withdraw its consent to the settlement if comments received disclose facts or considerations which indicate that the settlement is inappropriate, improper, or inadequate. Commenters may request an opportunity for a public meeting to be held in the area of Strafford or Thetford, Vermont, in accordance with section 7003(d) of RCRA, 24 U.S.C. 6973(d). The Agency's response to any comments received will be available for public inspection at One Congress Street, Suite 1100, Boston, MA 02114.

DATES: Comments must be submitted by November 19, 2008.

ADDRESSES: Comments or request for a public meeting should be addressed to the Regional Hearing Clerk, U.S. Environmental Protection Agency, Region 1, One Congress Street, Suite 1100, Mailcode RAA, Boston, Massachusetts 02203 and should refer to: In re: Elizabeth Mine Superfund Site, U.S. EPA Docket No. CERCLA–01–2008–0044.

FOR FURTHER INFORMATION CONTACT: A copy of the proposed Agreement can be obtained from Steven Schlang, U.S. Environmental Protection Agency, Region 1, One Congress Street, Mailcode SEL, Boston, Massachusetts 02114 or at (617) 918–1773.

Dated: September 22, 2008.

James T. Owens III,

Director, Office of Site Remediation and Restoration, Region 1.

[FR Doc. E8–24870 Filed 10–17–08; 8:45 am]

BILLING CODE 6560–50–P

FEDERAL COMMUNICATIONS COMMISSION

Radio Broadcasting Services; AM or FM Proposals To Change the Community of License

AGENCY: Federal Communications Commission.

ACTION: Notice.

SUMMARY: The following applicants filed AM or FM proposals to change the community of license: ANDERSON RADIO BROADCASTING, INC., Station KZXT, Facility ID 164302, BMPH–20080904ABB, From EUREKA, MT, To EVERGREEN, MT; ATHENS CHRISTIAN RADIO, INC., Station NEW,

Facility ID 172936, BMPED–20080925ACR, From CRAWFORDVILLE, GA, To GREENSBORO, GA; BIRACH BROADCASTING CORPORATION, Station WGOP, Facility ID 5347, BP–20071102ARL, From POCOMOKE CITY, MD, To DAMASCUS, MD; CC LICENSES, LLC, Station WPHR–FM, Facility ID 25018, BPH–20080902ADS, From AUBURN, NY, To SOLVAY, NY; COX RADIO, INC., Station WNGC, Facility ID 60810, BPH–20080118AAC, From TOCCOA, GA, To ARCADE, GA; COX RADIO, INC., Station WXKT, Facility ID 3078, BPH–20080619AJQ, From ROYSTON, GA, To MAYSVILLE, GA; DAKOTA COMMUNICATIONS, LTD., Station KZNC, Facility ID 15262, BPH–20080828AAX, From HURON, SD, To MILBANK, SD; KIMBALL RADIO, LLC, Station KYOY, Facility ID 77915, BPH–20080910ABW, From KIMBALL, NE, To HILLSDALE, WY; LA NUEVA CADENA RADIO LUZ INCORPORATED, Station KBAW, Facility ID 86858, BPH–20081006AIX, From ZAPATA, TX, To RANCHITOS LOS LOMAS, TX; LEGEND COMMUNICATIONS OF WYOMING, LLC, Station KYTS, Facility ID 165979, BMPH–20080916ABE, From TEN SLEEP, WY, To MANDERSON, WY; MICHAEL RADIO GROUP, Station KRKI, Facility ID 89114, BPH–20080929AIT, From NEWCASTLE, WY, To KEYSTONE, SD; NORTHERN LIGHTS BROADCASTING, LLC, Station KTTB, Facility ID 70705, BPH–20080902ADD, From GLENCOE, MN, To EDINA, MN; NORTHERN LIGHTS BROADCASTING, LLC, Station KRBI, Facility ID 31874, BP–20080902ADB, From ST. PETER, MN, To GLENCOE, MN; SAGA COMMUNICATIONS OF ILLINOIS, LLC, Station WYMG, Facility ID 58537, BPH–20080820AAI, From JACKSONVILLE, IL, To CHATHAM, IL; SAIDNEWSFOUNDATION, Station WJKZ, Facility ID 175750, BMPED–20080915AAN, From HANOVER, MI, To HOMER, MI; SOUTHERN STONE BROADCASTING, INC., Station WMGZ, Facility ID 41993, BPH–20070416ACW, From EATONTON, GA, To WASHINGTON, GA; THE UNIVERSITY OF FINDLAY, Station WLFC, Facility ID 21474, BPED–20080902AEA, From FINDLAY, OH, To NORTH BALTIMORE, OH; VINEYARD CHRISTIAN FELLOWSHIP OF HONOLULU, INC., Station KPHL, Facility ID 91242, BPED–20080910ABT, From PAHALA, HI, To HAWAIIAN OCEAN VIEW, HI.

DATES: Comments may be filed through December 19, 2008.

ADDRESSES: Federal Communications Commission, 445 Twelfth Street, SW., Washington, DC 20554.

FOR FURTHER INFORMATION CONTACT: Tung Bui, 202–418–2700.

SUPPLEMENTARY INFORMATION: The full text of these applications is available for inspection and copying during normal business hours in the Commission's Reference Center, 445 12th Street, SW., Washington, DC 20554 or electronically via the Media Bureau's Consolidated Data Base System, *http://svartifoss2.fcc.gov/prod/cdbs/pubacc/prod/cdbs_pa.htm*. A copy of this application may also be purchased from the Commission's duplicating contractor, Best Copy and Printing, Inc., 445 12th Street, SW., Room CY–B402, Washington, DC, 20554, telephone 1–800–378–3160 or *http://www.BCPIWEB.com.*

Federal Communications Commission.

James D. Bradshaw,

Deputy Chief, Audio Division Media Bureau.

[FR Doc. E8–24934 Filed 10–17–08; 8:45 am]

BILLING CODE 6712–01–P

FEDERAL DEPOSIT INSURANCE CORPORATION

Notice of Agency Meeting

Pursuant to the provisions of the ''Government in the Sunshine Act'' (5 U.S.C. 552b), notice is hereby given that at 2:35 p.m. on Friday, October 10, 2008, the Board of Directors of the Federal Deposit Insurance Corporation met in open session to consider the following matter:

Memorandum and resolution re: Interim Rule on Temporary Increase in Standard Coverage Amount and on Mortgage Servicing Accounts.

In calling the meeting, the Board determined, on motion of Vice Chairman Martin J. Gruenberg, seconded by Director John C. Dugan (Comptroller of the Currency), concurred in by Director John M. Reich (Director, Office of Thrift Supervision), Director Thomas J. Curry (Appointive), and Chairman Sheila C. Bair, that Corporation business required its consideration of the matters on less than seven days' notice to the public; and that no notice of the meeting earlier than October 8, 2008, was practicable.

The meeting was held in the Board Room of the FDIC Building located at 550—17th Street, NW., Washington, DC.

Dated: October 14, 2008.

Federal Deposit Insurance Corporation.

Robert E. Feldman,

Executive Secretary.

[FR Doc. E8–24879 Filed 10–17–08; 8:45 am]

BILLING CODE 6714–01–P

FEDERAL HOUSING FINANCE AGENCY

Federal Home Loan Bank Members Selected for Community Support Review

AGENCY: Federal Housing Finance Agency.

ACTION: Notice.

SUMMARY: The Federal Housing Finance Agency (FHFA) is announcing the Federal Home Loan Bank (Bank) members it has selected for the 2008–09 third quarter review cycle under the community support requirements regulation. This notice also prescribes the deadline by which Bank members selected for review must submit Community Support Statements to the FHFA.

DATES: Bank members selected for the review cycle under the community support requirements regulation must submit completed Community Support Statements to the FHFA on or before November 21, 2008.

ADDRESSES: Bank members selected for the 2008–09 third quarter review cycle under the community support requirements regulation must submit completed Community Support Statements to the FHFA either by regular mail at the Federal Housing Finance Board, Office of Supervision, Community Investment and Affordable Housing, 1625 Eye Street, NW., Washington, DC 20006, or by electronic mail at *FITZGERALDE@FHFB.GOV*.

FOR FURTHER INFORMATION CONTACT: Emma J. Fitzgerald, Program Analyst, Federal Housing Finance Board Office of Supervision, Community Investment and Affordable Housing, by telephone at 202–408–2874, by electronic mail at *FITZGERALDE@FHFB.GOV*, or by regular mail at the Federal Housing Finance Board, 1625 Eye Street, NW., Washington, DC 20006.

SUPPLEMENTARY INFORMATION:

I. Selection for Community Support Review

Section 10(g)(1) of the Federal Home Loan Bank Act (Bank Act) requires the FHFA to promulgate regulations establishing standards of community investment or service Bank members must meet in order to maintain access to long-term advances. *See* 12 U.S.C.

1430(g)(1). The regulations must take into account factors such as the Bank member's performance under the Community Reinvestment Act of 1977 (CRA), 12 U.S.C. 2901 *et seq.,* and record of lending to first-time homebuyers. *See* 12 U.S.C. 1430(g)(2). Pursuant to section 10(g) of the Bank Act, the FHFA's predecessor agency, the Federal Housing Finance Board (Finance Board) promulgated a community support requirements regulation that establishes standards a Bank member must meet in order to maintain access to long-term advances, and review criteria the FHFA must apply in evaluating a member's community support performance. *See* 12 CFR part 944. The regulation includes standards and criteria for the two statutory factors—CRA performance and record of lending to first-time homebuyers. 12 CFR 944.3. Only members subject to the CRA must meet the CRA standard. 12 CFR 944.3(b). All members, including those not subject to CRA, must meet the first-time homebuyer standard. 12 CFR 944.3(c).

Under the rule, the FHFA selects approximately one-eighth of the members in each Bank district for community support review each calendar quarter. 12 CFR 944.2(a). The FHFA will not review an institution's community support performance until it has been a Bank member for at least one year. Selection for review is not, nor should it be construed as, any indication of either the financial condition or the community support performance of the member.

Each Bank member selected for review must complete a Community Support Statement and submit it to the FHFA by the November 21, 2008 deadline prescribed in this notice. 12 CFR 944.2(b)(1)(ii) and (c). On or before October 24, 2008, each Bank will notify the members in its district that have been selected for the 2008–09 third quarter community support review cycle that they must complete and submit to the FHFA by the deadline a Community Support Statement. 12 CFR 944.2(b)(2)(i). The member's Bank will provide a blank Community Support Statement Form, which also is available on the Finance Board Web site at *http://www.fhfb.gov*. Upon request, the member's Bank also will provide assistance in completing the Community Support Statement.

The Finance Board has selected the following members for the 2008–09 third quarter community support review cycle:

Federal Home Loan Bank of Boston—District 1

Collinsville Savings Society	Canton	CT
Enfield Federal Savings and Loan Association	Enfield	CT
Essex Savings Bank	Essex	CT
The Guilford Savings Bank	Guilford	CT
Nutmeg State Federal Credit Union	Rocky Hill	CT
Northwest Community Bank	Winsted	CT
Bar Harbor Bank and Trust	Bar Harbor	ME
First Federal Savings & Loan Association of Bath	Bath	ME
Camden National Bank	Camden	ME
Aroostook County FS&LA	Caribou	ME
Damariscotta Bank & Trust Company	Damariscotta	ME
Franklin Savings Bank	Farmington	ME
Kennebunk Savings Bank	Kennebunk	ME
Katahdin Trust Company	Patten	ME
Rockland Savings and Loan Association	Rockland	ME
Skowhegan Savings Bank	Skowhegan	ME
Kennebec Federal Savings & Loan Association	Waterville	ME
Athol Savings Bank	Athol	MA
North Middlesex Savings Bank	Ayer	MA
First Federal Savings Bank of Boston	Boston	MA
First Trade Union Bank	Boston	MA
Boston Private Bank & Trust Company	Boston	MA
OneUnited Bank	Boston	MA
Peoples Federal Savings Bank	Brighton	MA
Cambridge Savings Bank	Cambridge	MA
East Cambridge Savings Bank	Cambridge	MA
Bank of Canton	Canton	MA
Clinton Savings Bank	Clinton	MA
Danversbank	Danvers	MA
Dedham Institution for Savings	Dedham	MA
Eagle Bank	Everett	MA
Southern Massachusetts Credit Union	Falhaven	MA
Citizens-Union Savings Bank	Fall River	MA
Family Federal Savings F.A	Fitchburg	MA
Florence Savings Bank	Florence	MA
Foxboro Federal Savings	Foxboro	MA
Colonial Co-operative Bank	Gardner	MA
Georgetown Savings Bank	Georgetown	MA
Hingham Institution for Savings	Hingham	MA
Peoples Bank	Holyoke	MA
Hyde Park Savings Bank	Hyde Park	MA
Equitable Co-operative Bank	Lynn	MA
Mansfield Co-Operative Bank	Mansfield	MA
Marblehead Savings Bank	Marblehead	MA
Milford Federal Savings and Loan Association	Milford	MA
Millbury Savings Bank	Millbury	MA
Monson Savings Bank	Monson	MA
River Bank North	Andover	MA
Northampton Cooperative Bank	Northampton	MA

Hometown Bank, a Co-Operative Bank	Oxford	MA
Colonial Federal Savings Bank	Quincy	MA
Reading Co-Operative Bank	Reading	MA
Saugusbank, A Cooperative Bank	Saugus	MA
Scituate Federal Savings Bank	Scituate	MA
Middlesex Federal Savings, F.A	Somerville	MA
Southbridge Savings Bank	Southbridge	MA
Spencer Savings Bank	Spencer	MA
Hampden Bank	Springfield	MA
Bristol County Savings Bank	Taunton	MA
Mechanics Co-operative Bank	Taunton	MA
The Savings Bank	Wakefield	MA
South Shore Savings Bank	Weymouth	MA
Federal Savings Bank	Dover	NH
Franklin Savings Bank	Franklin	NH
RBS Citizens, National Association	Meredith	NH
Salem Co-operative Bank	Salem	NH
Newport Federal Savings Bank	Newport	RI
Rhode Island Credit Union	Providence	RI
Union Bank	Morrisville	VT
Northfield Savings Bank	Northfield	VT
Randolph National Bank	Randolph	VT

Federal Home Loan Bank of New York—District 2

Audubon Savings Bank	Audubon	NJ
Pamrapo Savings Bank SLA	Bayinne	NJ
Bogota Savings Bank	Bogota	NJ
Peoples Savings Bank	Bordentown	NJ
Century Savings Bank	Bridgeton	NJ
Colonial Bank FSB	Bridgeton	NJ
Farmers & Mechanics Bank	Burlington	NJ
Sturdy Savings Bank	Cape May Court House	NJ
Spencer Savings Bank, SLA	Elmwood Park	NJ
NVE Bank	Englewood	NJ
Kearny Federal Savings Bank	Fairfield	NJ
Freehold Savings & Loan Association	Freehold	NJ
GSL Savings Bank	Guttenberg	NJ
Glen Rock Savings Bank	Hawthorne	NJ
Morgan Stanley Trust	Jersey City	NJ
Schuyler Savings Bank	Kearny	NJ
Lincoln Park Savings Bank	Lincoln Park	NJ
Metuchen Savings Bank	Metuchen	NJ
Millington Savings Bank	Millington	NJ
Ocean City Home Bank	Ocean City	NJ
Amboy National Bank	Old Bridge	NJ
Roma Bank	Robbinsville	NJ
Boiling Springs Savings Bank	Rutherford	NJ
Gloucester County Federal Savings Bank	Sewell	NJ
Investor Savings Bank	Short Hills	NJ
OceanFirst Bank	Toms River	NJ
Oritani Savings Bank	Township of Washington	NJ
Penn Federal Savings Bank	West Orange	NJ
The Bank	Woodbury	NJ
Brooklyn Federal Savings Bank	Brooklyn	NY
The Canandaigua NB&TC	Canandaigua	NY
Canisteo Savings & Loan Association	Canisteo	NY
Elmira Savings Bank, FSB	Elmira	NY
Glens Falls National Bank and Trust Company	Glens Falls	NY
Evans National Bank	Hamburg	NY
Maple City Savings Bank, FSB	Hornell	NY
Sunnyside FS&LA of Irvington	Irvington	NY
Cattaraugus County Bank	Little Valley	NY
The Lyons National Bank	Lyons	NY
Maspeth Federal Savings and Loan Association	Maspeth	NY
Massena Savings & Loan Association	Massena	NY
Cross County Federal Savings Bank	Middle Village	NY
Provident Bank	Montebello	NY
Carver Federal Savings Bank	New York	NY
The Berkshire Bank	New York	NY
Country Bank	New York	NY
Abacus Federal Savings Bank	New York	NY
Chinatown Federal Savings Bank	New York	NY
Wilber National Bank	Oneonta	NY
Union State Bank	Orangeburg	NY
PathFinder Bank	Oswego	NY

The Upstate National Bank	Rochester	NY
Saratoga National Bank & Trust Company	Saratoga Springs	NY
The National Bank of Stamford	Stamford	NY
Wallkill Valley FS&LA	Wallkill	NY
Five Star Bank	Warsaw	NY
Doral Bank	San Juan	PR
Oriental Bank & Trust	San Juan	PR

Federal Home Loan Bank of Pittsburgh—District 3

Delaware National Bank	Georgetown	DE
Artisans' Bank	Wilmington	DE
Altoona First Savings Bank	Altoona	PA
Reliance Bank	Altoona	PA
Investment Savings Bank	Altoona	PA
First Columbia Bank & Trust	Bloomsburg	PA
The Bryn Mawr Trust Company	Bryn Mawr	PA
NexTier Bank	Butler	PA
Community Bank	Carmichaels	PA
Charleroi Federal Savings Bank	Charleroi	PA
CNB Bank	Clearfield	PA
Coatesville Savings Bank	Coatesville	PA
Slovenian S&LA of Franklin-Conemaugh	Conemaugh	PA
FirsTrust Bank	Conshohocken	PA
First National Community Bank	Dunmore	PA
Armstrong County Building & Loan Association	Ford City	PA
Greenville Savings Bank	Greenville	PA
Halifax National Bank	Halifax	PA
Peoples National Bank	Hallstead	PA
The Honesdale National Bank	Honesdale	PA
Polonia Bank	Huntingdon Valley	PA
Mauch Chunk Trust Company	Jim Thorpe	PA
1st Summit Bank	Johnstown	PA
Union National Community Bank	Lancaster	PA
Westmoreland FS&LA	Latrobe	PA
VIST Bank	Leesport	PA
Mifflin County Savings Bank	Lewistown	PA
Luzerne National Bank	Luzerne	PA
First Citizens National Bank	Mansfield	PA
Mifflinburg Bank & Trust Company	Mifflinburg	PA
The First National Bank of Mifflintown	Mifflintown	PA
First Federal Savings Bank	Monessen	PA
Parkvale Savings Bank	Monroeville	PA
The Muncy Bank and Trust Company	Muncy	PA
Community State Bank of Orbisonia	Orbisonia	PA
Conestoga Bank	Philadelphia	PA
Republic First Bank	Philadelphia	PA
Prudential Savings Bank	Philadelphia	PA
Beneficial Mutual Savings Bank	Philadelphia	PA
Slovak Savings Bank	Pittsburgh	PA
Eureka Bank	Pittsburgh	PA
Iron and Glass Bank	Pittsburgh	PA
United-American Savings Bank	Pittsburgh	PA
West View Savings Bank	Pittsburgh	PA
Union Bank and Trust Company	Pottsville	PA
Liberty Savings Bank, F.S.B	Pottsville	PA
Elk County Savings & Loan Association	Ridgway	PA
Scottdale Bank and Trust Company	Scottdale	PA
Sewickley Savings Bank	Sewickley	PA
Hamlin Bank and Trust Company	Smethport	PA
ESSA Bank & Trust	Stroudsburg	PA
Eagle National Bank	Upper Darby	PA
Northwest Savings Bank	Warren	PA
Washington Federal Savings Bank	Washington	PA
First FS&LA of Greene County	Waynesburg	PA
Citizens & Northern Bank	Wellsboro	PA
Peoples State Bank of Wyalusing	Wyalusing	PA
City National Bank of West Virginia	Cross Lanes	WV
Calhoun County Bank, Inc	Grantsville	WV
First Sentry Bank, Inc	Huntington	WV
Huntington Federal Savings Bank	Huntington	WV
Citizens Bank of Morgantown	Morgantown	WV
Doolin Security Savings Bank FSB	New Martinsville	WV
United Bank, Inc	Parkersburg	WV
First FS&LA of Ravenswood	Ravenswood	WV
First National Bank in Ronceverte	Ronceverte	WV

First Federal Savings Bank	Sistersville	WV
The Williamstown National Bank	Williamstown	WV

Federal Home Loan Bank of Atlanta—District 4

The Exchange Bank of Alabama	Altoona	AL
First Commercial Bank	Birmingham	AL
Capital South Bank	Birmingham	AL
Brantley Bank and Trust Company	Brantley	AL
Central State Bank	Calera	AL
The Camden National Bank	Camden	AL
Frontier Bank	Chelsea	AL
Robertson Banking Company	Demopolis	AL
SunSouth Bank	Dothan	AL
The Southern Bank Company	Gadsen	AL
The Citizens Bank	Greensboro	AL
First National Bank	Hamilton	AL
The Headland National Bank	Headland	AL
Security Federal Savings Bank	Jasper	AL
First State Bank	Lineville	AL
First Citizens Bank	Luverne	AL
BankTrust	Mobile	AL
First Tuskegee Bank	Montgomery	AL
The Citizens Bank	Moulton	AL
Phenix-Girard Bank	Phenix City	AL
Citizens Bank, Inc.	Robertsdale	AL
The Slocomb National Bank	Slocomb	AL
The Bank of Vernon	Vernon	AL
Bank of Wedowee	Wedowee	AL
Wilmington Trust FSB	Wilmington	DE
Bank of Belle Glade	Belle Glade	FL
Community Bank of Manatee	Bradenton	FL
BankUnited, FSB	Coral Gables	FL
BankAtlantic	Fort Lauderdale	FL
1st United Bank	Fort Lauderdale	FL
Florida Citizens Bank	Gainesville	FL
Natbank, N.A	Hollywood	FL
VyStar Credit Union	Jacksonville	FL
First State Bank of Florida Keys	Key West	FL
Central Florida Educators' FCU	Lake Mary	FL
Mercantile Commercebank, National Association	Miami	FL
FirstBank Florida	Miami	FL
Eagle National Bank of Miami	Miami	FL
Republic Federal Bank, NA	Miami	FL
International Finance Bank	Miami	FL
Orion Bank	Naples	FL
First Federal Bank of North Florida	Palatka	FL
Bay Bank and Trust Company	Panama City	FL
OptimumBank	Plantation	FL
Charlotte State Bank	Port Charlotte	FL
Federal Trust Bank	Sanford	FL
Bank of St. Augustine	St. Augustine	FL
Capital City Bank	Tallahassee	FL
Progress Bank of Florida	Tampa	FL
Wauchula State Bank	Wauchula	FL
Bank of Alapaha	Alapaha	GA
Cornerstone Bank	Atlanta	GA
Georgia Bank and Trust Company of Augusta	Augusta	GA
United Community Bank	Blairsville	GA
Planters and Citizens Bank	Camilla	GA
The Claxton Bank	Claxon	GA
Newton Federal Bank	Covington	GA
Chestatee State Bank	Dawsonville	GA
First National Bank of Coffee County	Douglas	GA
Bank of Eastman	Eastman	GA
Farmers & Merchants Bank	Eatonton	GA
Elberton Federal Savings & Loan Association	Elberton	GA
Central Bank of Georgia	Ellaville	GA
Appalachian Community Bank	Ellijay	GA
Capital Bank	Fort Oglethorpe	GA
The Farmers Bank	Greensboro	GA
BankSouth	Greensboro	GA
Bank of Hiawassee	Hiawassee	GA
Crescent Bank & Trust Company	Jasper	GA
Farmers State Bank	Lincolnton	GA
Peoples Bank	Lyons	GA

Pineland State Bank	Metter	GA
Mount Vernon Bank	Mt. Vernon	GA
The Citizens Bank	Nashville	GA
The Bank of Georgia	Peachtree City	GA
Gateway Bank and Trust	Ringgold	GA
Greater Rome Bank	Rome	GA
The Coastal Bank	Savannah	GA
Farmers & Merchants Bank	Statesboro	GA
Spivey State Bank	Swainsboro	GA
Commercial Bank	Thomasville	GA
First Federal Savings and Loan of Valdosta	Valdosta	GA
Severn Savings Bank, F.S.B	Annapolis	MD
Hamilton Federal Bank	Baltimore	MD
Fraternity Federal S&L Association	Baltimore	MD
Homewood Federal Savings Bank	Baltimore	MD
Advance Bank	Baltimore	MD
Saint Casimirs Savings Bank	Baltimore	MD
United Medical Bank	Baltimore	MD
Provident Bank of Maryland	Baltimore	MD
Community First Bank	Baltimore	MD
Urban Trust Bank	Bethesda	MD
Presidential Bank, FSB	Bethesda	MD
The Peoples Bank	Chestertown	MD
Easton Bank & Trust	Easton	MD
The Talbot Bank of Easton	Easton	MD
The Peoples Bank of Elkton	Elkton	MD
Madison Bohemian Savings Bank	Forest Hills	MD
American Bank	Greenbelt	MD
Eastern Savings Bank, FSB	Hunt Valley	MD
Jarrettsville Federal S&L Association	Jarrettsville	MD
K Bank	Owings Mills	MD
Baltimore County Savings Bank, FSB	Perry Hall	MD
Colombo Bank	Rockville	MD
First Shore FS&L Association	Salisbury	MD
Sykesville Federal Savings Association	Sykesville	MD
AmericasBank	Towson	MD
Maryland Bank and Trust Company, N.A	Waldorf	MD
The East Carolina Bank	Engelhard	NC
High Point Bank and Trust Company	High Point	NC
Branch Banking and Trust Company	Lumberton	NC
RBC Bank (USA)	Rocky Mount	NC
First Bank	Troy	NC
Piedmont Federal Savings Bank	Winston Salem	NC
Sandhills Bank	Bethune	SC
Woodlands Bank	Bluffton	SC
First Palmetto Savings Bank, FSB	Camden	SC
Spratt Savings and Loan Association	Chester	SC
Southern First Bank	Greenville	SC
The Peoples Bank	Iva	SC
The Palmetto Bank	Laurens	SC
The Citizens Bank	Olanta	SC
Plantation Federal Bank	Pawleys Island	SC
Woodruff Federal Savings & Loan Association	Woodruff	SC
Virginia Commerce Bank	Arlington	VA
First State Bank	Danville	VA
EVB	Glenns	VA
Powell Valley National Bank	Jonesville	VA
First and Citizens Bank	Monterey	VA
Shore Bank	Onley	VA
First Federal Savings Bank of Virginia	Petersburg	VA
The Bank of Charlotte County	Phenix	VA
Valley Bank	Roanoke	VA
Community Bank	Staunton	VA

Federal Home Loan Bank of Cincinnati—District 5

Kentucky Home Bank, Inc	Bardstown	KY
Bank of Edmonson County	Brownsville	KY
United Citizens Bank & Trust Company	Campbellsburg	KY
Citizens Bank & Trust Company	Campbellsville	KY
Farmers and Traders Bank of Campton	Campton	KY
Carrollton Federal Bank	Carrollton	KY
The First National Bank of Muhlenburg County	Central City	KY
Bank of Clarkson	Clarkson	KY
First Community Bank of Western Kentucky, Inc	Clinton	KY
Clinton Bank	Clinton	KY

Citizens Federal Savings and Loan Association of Covington	Covington	KY
The Farmers National Bank of Cynthiana	Cynthiana	KY
Central Kentucky Federal Savings Bank	Danville	KY
South Central Bank, FSB	Elizabethton	KY
United Kentucky Bank of Pendleton County, Inc	Falmouth	KY
American Founders Bank, Inc	Frankfort	KY
Fredonia Valley Bank	Fredonia	KY
State Bank & Trust Company	Harrodsburg	KY
First Federal Savings & Loan Association	Hazard	KY
The Citizens National Bank	Lebanon	KY
Bank of the Bluegrass & Trust Company	Lexington	KY
First Federal Bank	Lexington	KY
Peoples Security Bank	Louisa	KY
The First Capital Bank of Kentucky	Louisville	KY
Home Federal Bank Corporation	Middlesboro	KY
First FS&LA of Morehead	Morehead	KY
Commonwealth Bank, F.S.B	Mt. Sterling	KY
Traditional Bank, Inc	Mt. Sterling	KY
Citizens Bank	Mt. Vernon	KY
Peoples Bank of Mt. Washington	Mt. Washington	KY
Farmers Bank & Trust Company, Inc	Princeton	KY
First Southern National Bank	Stanford	KY
Farmers National Bank	Walton	KY
Liberty National Bank	Ada	OH
Belmont Savings Bank	Bellaire	OH
The Citizens National Bank of Bluffton	Bluffton	OH
The Brookville Building and Savings Association	Brookville	OH
First Federal Community Bank of Bucyrus	Bucyrus	OH
Peoples Savings and Loan Company	Bucyrus	OH
Columbia Savings Bank	Cincinnati	OH
KEMBA Financial CU, Inc	Cincinnati	OH
New Foundation Loan and Building Company	Cincinnati	OH
Warsaw Federal S&LA of Cincinnati	Cincinnati	OH
The Franklin Savings and Loan Company	Cincinnati	OH
First Safety Bank	Cincinnati	OH
The Savings Bank	Circleville	OH
Third FS&LA of Cleveland	Cleveland	OH
First City Bank	Columbus	OH
The Cortland Savings and Banking Company	Cortland	OH
Ohio Heritage Bank	Coshocton	OH
Valley Savings Bank	Cuyahoga Falls	OH
First Federal Bank of the Midwest	Defiance	OH
United Midwest Savings Bank	DeGraff	OH
Fidelity FS&LA of Delaware	Delaware	OH
First Federal Community Bank	Dover	OH
Heartland Bank	Gahanna	OH
Home Building and Loan Company	Greenfield	OH
Greenville Federal Savings and Loan Association	Greenville	OH
NCB, FSB	Hillsboro	OH
Merchants National Bank	Hillsboro	OH
Liberty Federal Savings Bank	Ironton	OH
Ohio River Bank	Ironton	OH
Home Savings Bank	Kent	OH
The Home Savings and Loan Company of Kenton, Ohio	Kenton	OH
Kingston National Bank	Kingston	OH
First FS&LA of Lakewood	Lakewood	OH
Fairfield Federal S&LA of Lancaster	Lancaster	OH
1st National Bank	Lebanon	OH
Leesburg Federal Savings Bank	Leesburg	OH
The Citizens Bank of Logan	Logan	OH
The Mechanics Savings Bank	Mansfield	OH
Peoples Bank, National Association	Marietta	OH
The Middlefield Banking Company	Middlefield	OH
The Nelsonville Home and Savings Association	Nelsonville	OH
New Carlisle Federal Savings Bank	New Carlisle	OH
First FS&LA of Newark	Newark	OH
The Park National Bank	Newark	OH
The National Bank of Oak Harbor	Oak Harbor	OH
American Savings Bank, fsb	Portsmouth	OH
The Valley Central Savings Bank	Reading	OH
The Citizens Banking Company	Sandusky	OH
Peoples Federal Savings and Loan Association of Sidney	Sidney	OH
Commodore Bank	Somerset	OH
Somerville National Bank	Somerville	OH
Home City Federal Savings Bank	Springfield	OH
Monroe Federal Savings and Loan Association	Tipp City	OH

Perpetual Federal Savings Bank	Urbana	OH
Van Wert Federal Savings Bank	Van Wert	OH
Home Savings Bank	Wapakoneta	OH
The Waterford Commercial and Savings Bank	Waterford	OH
Adams County Building and Loan Company	West Union	OH
Liberty Savings Bank, F.S.B	Wilmington	OH
North Valley Bank	Zanesville	OH
Farmers & Merchants Bank	Adamsville	TN
First South Credit Union	Bartlett	TN
Bank of Bartlett	Bartlett	TN
Bank of Crocker	Bells	TN
InTrust Federal Credit Union	Chattanooga	TN
F&M Bank	Clarksville	TN
Decatur County Bank	Decaturville	TN
Farmers and Merchants Bank	Dyer	TN
First Citizens National Bank of Dyersburg	Dyersburg	TN
Elizabethton Federal Savings Bank	Elizabethton	TN
The Bank of Jackson	Jackson	TN
Progressive Savings Bank, F.S.B	Jamestown	TN
Home Federal Bank of Tennessee	Knoxville	TN
Wilson Bank and Trust	Lebanon	TN
First National Bank of Tennessee	Livingston	TN
Volunteer Federal Savings & Loan Association of Madisonville	Madisonville	TN
Trust One Bank	Memphis	TN
Jefferson Federal Bank	Morristown	TN
Citizens Bank	New Tazewell	TN
Newport Federal Bank	Newport	TN
TNBANK	Oak Ridge	TN
Citizens Community Bank	Winchester	TN

Federal Home Loan Bank of Indianapolis—District 6

Independent Federal Credit Union	Anderson	IN
First Federal Savings Bank—Angola	Angola	IN
Peoples FSB of Dekalb County	Auburn	IN
Farmers and Mechanics FS&LA	Bloomfield	IN
Boonville Federal Savings Bank	Boonville	IN
The First State Bank	Bourbon	IN
Riddell National Bank	Brazil	IN
Indiana Bank and Trust Company	Columbus	IN
Union Savings & Loan Association	Connersville	IN
Community First Bank	Corydon	IN
First Federal Savings Bank	Evansville	IN
Old National Bank	Evansville	IN
Farmers Bank	Frankfort	IN
Newton County Loan & SA, FSB	Goodland	IN
First Federal Savings & Loan of Greensburg	Greensburg	IN
Lake Federal Bank, FSB	Hammond	IN
Pacesetter Bank	Hartford City	IN
Kentland Federal Savings and Loan Association	Kentland	IN
La Porte Savings Bank	La Porte	IN
Logansport Savings Bank, FSB	Logansport	IN
Security Federal Savings Bank	Logansport	IN
Home Bank, SB	Martinsville	IN
The First National Bank of Monterey	Monterey	IN
First Merchants Bank, N.A	Muncie	IN
Mutual Bank	Muncie	IN
Peoples Bank SB	Munster	IN
American Savings, FSB	Munster	IN
Farmers State Bank	New Ross	IN
Community Bank	Noblesville	IN
The First National Bank of Odon	Odon	IN
Lincoln Bank	Plainfield	IN
First Bank Richmond, N.A	Richmond	IN
Mid-Southern Savings Bank, FSB	Salem	IN
Scottsburg Building & Loan Association	Scottsburg	IN
Owen Community Bank, s.b	Spencer	IN
Owen County State Bank	Spencer	IN
Grant County State Bank	Swayzee	IN
First Financial Bank	Terre Haute	IN
Crossroads Bank	Wabash	IN
First Federal Savings Bank	Washington	IN
Liberty Savings Bank, FSB	Whiting	IN
Bank of Wolcott	Wolcott	IN
Commercial Bank	Alma	MI
First Federal of Northern Michigan	Alpena	MI

Bay Port State Bank	Bay Port	MI
Tri-County Bank	Brown City	MI
Eaton Federal Savings Bank	Charlotte	MI
Monarch Community Bank	Coldwater	MI
Huron Community Bank	East Tawas	MI
Paramount Bank	Farmington Hills	MI
Select Bank	Grand Rapids	MI
Peoples State Bank	Hamtramck	MI
Hastings City Bank	Hastings	MI
Union Bank	Lake Odessa	MI
Peoples State Bank of Munising	Munising	MI
New Buffalo Savings Bank, FSB	New Buffalo	MI
Thumb National Bank & Trust	Pigeon	MI
Citizens First Savings Bank	Port Huron	MI
Kalamazoo County State Bank	Schoolcraft	MI
First National Bank of St. Ignace	St. Ignace	MI
Edgewater Bank	St. Joseph	MI
FNB Financial	Three Rivers	MI
Northwestern Bank	Traverse City	MI
First National Bank of Wakefield	Wakefield	MI

Federal Home Loan Bank of Chicago—District 7

First Community Bank and Trust	Beecher	IL
First State Bank of Beecher City	Beecher City	IL
American Enterprise Bank	Buffalo Grove	IL
Farmers State Bank of Camp Point	Camp Point	IL
The First National Bank in Carlyle	Carlyle	IL
Cornerstone Bank & Trust, N.A	Carrollton	IL
Central Illinois Bank—MC	Champaign	IL
BankChampaign, N.A	Champaign	IL
First Federal Savings Bank of Champaign–Urbana	Champaign	IL
Charleston Federal Savings & Loan Association	Charleston	IL
Lincoln Park Savings Bank	Chicago	IL
Washington Federal Bank for Savings	Chicago	IL
Central Federal S&LA of Chicago	Chicago	IL
South Central Bank, N.A	Chicago	IL
Oak Bank	Chicago	IL
Broadway Bank	Chicago	IL
Community Savings Bank	Chicago	IL
Columbus Savings Bank	Chicago	IL
Liberty Bank for Savings	Chicago	IL
Mutual Federal Savings and Loan Association of Chicago	Chicago	IL
Diamond Bank FSB	Chicago	IL
Pulaski Savings Bank	Chicago	IL
First Chicago Bank & Trust	Chicago	IL
Illinois Service Federal Savings & Loan Association	Chicago	IL
Family Federal Savings of Illinois	Cicero	IL
West Town Savings Bank	Cicero	IL
The John Warner Bank	Clinton	Il
Home Federal Savings & Loan Association	Collinsville	IL
Collinsville Building and Loan Association	Collinsville	IL
The Elizabeth State Bank	Elizabeth	IL
Flora Bank & Trust	Flora	IL
Forreston State Bank	Forreston	IL
Hickory Point Bank & Trust, FSB	Forsyth	IL
Community Bank—Wheaton/Glen Ellyn	Glen Ellyn	IL
Glenview State Bank	Glenview	IL
Guardian Savings Bank FSB	Granite City	IL
First National Bank of Grant Park	Grant Park	IL
Granville National Bank	Granville	IL
The Bradford National Bank of Greenville	Greenville	IL
The Havana National Bank	Havana	IL
Herrin Security Bank	Herrin	IL
South End Savings, s.b	Homewood	IL
First State Bank of Western Illinois	La Harpe	IL
Eureka Savings Bank	La Salle	IL
First National Bank of Illinois	Lansing	IL
Heritage State Bank	Lawrenceville	IL
Lisle Savings Bank	Lisle	IL
The First National Bank of Litchfield	Litchfield	IL
West Suburban Bank	Lombard	IL
First Security Bank	Mackinaw	IL
First Bank of Manhattan	Manhattan	IL
1st State Bank of Mason City	Mason City	IL
Mazon State Bank	Mazon	IL

McHenry Savings Bank	McHenry	IL
The City National Bank of Metropolis	Metropolis	IL
Milford Building & Loan Association	Milford	IL
First National Bank	Moline	IL
Wabash Savings Bank	Mount Carmel	IL
The Farmers Bank of Mount Pulaski	Mount Pulaski	IL
Brown County State Bank	Mount Sterling	IL
Nashville Savings Bank	Nashville	IL
Wheaton Bank & Trust Company	Northfield	IL
Illini State Bank	Oglesby	IL
BankFinancial, FSB	Olympia Fields	IL
Herget Bank, N.A	Pekin	IL
National Bank of Petersburg	Petersburg	IL
The Poplar Grove State Bank	Poplar Grove	Il
Citizens First National Bank	Princeton	IL
First Robinson Savings Bank, NA	Robinson	IL
First Federal Savings & Loan Association	Shelbyville	IL
Citizens State Bank of Shipman	Shipman	IL
Town & Country Bank of Springfield	Springfield	IL
Marine Bank, Springfield	Springfield	IL
Tremont Savings Bank	Tremont	IL
The First National Bank	Vandalia	IL
International Bank of Amherst	Amherst	WI
The First National Bank of Bangor	Bangor	WI
Banner Banks	Birnamwood	WI
Community First Bank	Boscobel	WI
The Bank of Brodhead	Brodhead	WI
North Shore Bank FSB	Brookfield	WI
Bank of Deerfield	Deerfield	WI
National Exchange Bank & Trust	Fond du Lac	WI
Fox Valley Savings Bank	Fond du Lac	WI
PremierBank	Fort Atkinson	WI
Continental Savings Bank, FSB	Greenfield	WI
PyraMax Bank, F.S.B.	Greenfield	WI
Greenleaf Wayside Bank	Greenleaf	WI
Hustisford State Bank	Hustisford	WI
ISB Community Bank	Ixonia	WI
Mid America Bank	Janesville	WI
Union State Bank	Kewaunee	WI
Ladysmith Federal Savings & Loan Association	Ladysmith	WI
Bank of Lake Mills	Lake Mills	WI
BLC Community Bank	Little Chute	WI
Rural American Bank—Luck	Luck	WI
AnchorBank, F.S.B.	Madison	WI
Home Savings Bank	Madison	WI
Markesan State Bank	Markesan	WI
The Peoples Community Bank	Mazomanie	WI
Fidelity National Bank	Medford	WI
Bremer Bank, National Association	Menomonie	WI
Merrill Federal Savings and Loan Association	Merrill	WI
Middleton Community Bank	Middleton	WI
Milton Savings Bank	Milton	WI
First Community Bank	Milton	WI
Guaranty Bank	Milwaukee	WI
West Pointe Bank	Oshkosh	WI
Bank of Elmwood	Racine	WI
Dairy State Bank	Rice Lake	WI
Community Business Bank	Sauk City	WI
Heritage Bank	Spencer	WI
Baylake Bank	Sturgeon Bay	WI
Superior Savings Bank	Superior	WI
First Bank	Tomah	WI
Farmers & Merchants Bank	Tomah	WI
The Farmers State Bank of Waupaca	Waupaca	WI
The National Bank of Waupun	Waupun	WI
Maritime Savings Bank	West Allis	WI
West Bend Savings Bank	West Bend	WI
First Citizens State Bank	Whitewater	WI
Paper City Savings Association	Wisconsin Rapids	WI

Federal Home Loan Bank of Des Moines—District 8

Peoples State Bank	Albia	IA
Community Bank	Alton	IA
Bank Iowa	Altoona	IA
First National Bank of Ames	Ames	IA

Citizens Savings Bank	Anamosa	IA
Community State Bank, N.A.	Ankeny	IA
Ashton State Bank	Ashton	IA
Atkins Savings Bank & Trust	Atkins	IA
Farmers & Traders Savings Bank	Bancroft	IA
Chelsea Savings Bank	Belle Plaine	IA
Boone Bank & Trust Company	Boone	IA
Iowa Prairie Bank	Brunsville	IA
Lincoln Savings Bank	Cedar Falls	IA
Guaranty Bank & Trust Company	Cedar Rapids	IA
Iowa Trust and Savings Bank	Centerville	IA
First Security Bank and Trust Company	Charles City	IA
Cherokee State Bank	Cherokee	IA
Page County Federal Savings Association	Clarinda	IA
First Trust and Savings Bank	Coralville	IA
First Federal Savings Bank of Creston, F.S.B.	Creston	IA
Principal Bank	Des Moines	IA
Dubuque Bank & Trust Company	Dubuque	IA
Fidelity Bank & Trust	Dyersville	IA
Community Savings Bank	Edgewood	IA
First American Bank	Fort Dodge	IA
Citizens State Bank	Fort Dodge	IA
First Federal Savings Bank of Iowa	Fort Dodge	IA
Security State Bank	Guttenberg	IA
Westside State Bank	Halbur	IA
Hampton State Bank	Hampton	IA
First State Bank	Hawarden	IA
Bank Iowa	Humboldt	IA
Independence Federal Bank for Savings	Independence	IA
Farmers & Merchants Savings Bank	Iowa City	IA
First Community Bank	Keokuk	IA
State Central Bank	Keokuk	IA
Keokuk Savings Bank & Trust Company	Keokuk	IA
Iowa State Savings Bank	Knoxville	IA
Cedar Valley Bank & Trust	La Porte City	IA
Keystone Savings Bank	Marengo	IA
Heritage Bank	Marion	IA
F & M Bank—Iowa	Marshalltown	IA
United Community Bank	Milford	IA
New Albin Savings Bank	New Albin	IA
City State Bank	Norwalk	IA
Northwestern Bank	Orange City	IA
Clarke County State Bank	Osceola	IA
Bank Iowa	Oskaloosa	IA
Citizens Bank	Sac City	IA
Sibley State Bank	Sibley	IA
American State Bank	Sioux Center	IA
Solon State Bank	Solon	IA
Northwest Bank	Spencer	IA
Randall-Story State Bank	Story City	IA
First State Bank	Sumner	IA
Veridian Credit Union	Waterloo	IA
Webster City Federal Savings Bank	Webster City	IA
Community State Bank	West Branch	IA
West Liberty State Bank	West Liberty	IA
Citizens State Bank	Wyoming	IA
Farmers State Bank of Adams	Adams	MN
Bremer Bank, National Association	Alexandria	MN
Viking Savings Association, F.A.	Alexandria	MN
State Bank of Aurora	Aurora	MN
Northern National Bank	Baxter	MN
RiverWood Bank	Baxter	MN
State Bank of Bellingham	Bellingham	MN
Star Bank	Bertha	MN
First State Bank of Bigfork	Bigfork	MN
Farmers and Merchants State Bank of Blooming Prairie	Blooming Prairie	MN
First Bank Blue Earth	Blue Earth	MN
Brainerd S&LA, A Federal Association	Brainerd	MN
The First National Bank of Deerwood	Deerwood	MN
State Bank in Eden Valley	Eden Valley	MN
Bank Midwest	Fairmont	MN
State Bank of Faribault	Faribault	MN
Citizens B&TC	Hutchinson	MN
TruStar Federal Credit Union	International Falls	MN
State Bank of Kimball	Kimball	MN
Lake Elmo Bank	Lake Elmo	MN

First National Bank of Le Center	Le Center	MN
First State Bank of Le Center	Le Center	MN
First State Bank MN	LeRoy	MN
Home Savings of America	Little Falls	MN
First Farmers & Merchants National Bank	Luverne	MN
Central MN Federal Credit Union	Melrose	MN
First National Bank of Menahga & Sebeka	Menahga	MN
Prairie Sun Bank	Milan	MN
TCF National Bank	Minneapolis	MN
First Minnesota Bank	Minnetoka	MN
Peoples National Bank of Mora	Mora	MN
Community National Bank	North Branch	MN
The First National Bank of Osakis	Osakis	MN
Northwoods Bank of Minnesota	Park Rapids	MN
Horizon Bank	Pine City	MN
The First National Bank of Plainview	Plainview	MN
Prior Lake State Bank	Prior Lake	MN
Minnwest Bank, M.V.	Redwood Falls	MN
Think Mutual Bank	Rochester	MN
First Independent Bank	Russell	MN
Citizens Independent Bank	St. Louis Park	MN
Highland Bank	St. Michael	MN
First National Bank Minnesota	St. Peter	MN
State Bank of Tower	Tower	MN
Minnwest Bank South	Tracy	MN
Queen City Federal Savings Bank	Virginia	MN
Security State Bank of Wanamingo	Wanamingo	MN
Belgrade State Bank	Belgrade	MO
Ozark Mountain Bank	Branson	MO
O'Bannon Banking Company	Buffalo	MO
First National Bank	Camdenton	MO
Missouri Federal Savings Bank	Cameron	MO
Horizon State Bank	Cameron	MO
Canton State Bank	Canton	MO
Bank 21	Carrollton	MO
Southwest Missouri Bank	Carthage	MO
Mizzou Credit Union	Columbia	MO
State Bank of Missouri	Concordia	MO
Security Bank of the Ozarks	Eminence	MO
Rockwood Bank	Eureka	MO
North American Savings Bank, F.S.B.	Grandview	MO
F&M Bank & Trust Company	Hannibal	MO
Allen Bank & Trust Company	Harrisonville	MO
First Bank	Hazelwood	MO
Blue Ridge Bank & Trust Company	Independence	MO
Jonesburg State Bank	Jonesburg	MO
Missouri Bank & Trust Company	Kansas City	MO
Sunset Life Insurance Company of America	Kansas City	MO
First Federal Bank, F.S.B.	Kansas City	MO
KCB Bank	Kearney	MO
Metcalf Bank	Lee's Summit	MO
Clay County Savings Bank	Liberty	MO
Bank Liberty	Liberty	MO
First Home Savings Bank	Mountain Grove	MO
Boulevard Bank	Neosho	MO
Bank of New Madrid	New Madrid	MO
Home S&LA of Norborne, F.A.	Norborne	MO
Ozark Bank	Ozark	MO
Southern Missouri Bank & Trust Company	Poplar Bluff	MO
Central Federal Savings & Loan Association of Rolla	Rolla	MO
New Frontier Bank	Saint Charles	MO
Progressive Ozark Bank, FSB	Salem	MO
Security Bank & Trust Company	Scott City	MO
Community State Bank	Shelbina	MO
Montgomery Bank, N.A.	Sikeston	MO
Guaranty Bank	Springfield	MO
Bremen Bank and Trust Company	St. Louis	MO
Southern Commercial Bank	St. Louis	MO
Lindell Bank & Trust Company	St. Louis	MO
Community Bank, NA	Summersville	MO
Peoples Bank & Trust Company	Troy	MO
Bank of Urbana	Urbana	MO
The Missouri Bank	Warrenton	MO
Security Bank of Pulaski County	Waynesville	MO
FMB Bank	Wright City	MO
The First State Bank of North Dakota	Arthur	ND

Starion Financial	Bismarck	ND
The Ramsey National Bank & Trust Company of Devils Lake	Devils Lake	ND
American Bank Center	Dickinson	ND
Security State Bank	Dunseith	ND
Alerus Financial, N.A.	Grand Forks	ND
Bank Forward	Hannaford	ND
National Bank of Harvey	Harvey	ND
The Goose River Bank	Mayville	ND
The First State Bank of Munich	Munich	ND
Liberty State Bank	Powers Lake	ND
Dacotah Bank	Aberdeen	SD
First Federal Bank, A Federal Savings Bank	Beresford	SD
First Savings Bank	Beresford	SD
First Bank & Trust	Brookings	SD
Bryant State Bank	Bryant	SD
Dakota Heritage State Bank	Chancellor	SD
Valley Bank NA	Elk Point	SD
Reliabank Dakota	Estelline	SD
Campbell County Bank, Inc.	Herreid	SD
Plains Commerce Bank	Hoven	SD
Quoin Financial Bank	Miller	SD
CorTrust Bank, National Association	Mitchell	SD
American State Bank	Oldham	SD
American State Bank of Pierre	Pierre	SD
Farmers and Merchants State Bank	Plankinton	SD
First Western Federal Savings Bank	Rapid City	SD
First Premier Bank	Sioux Falls	SD
Midland National Life Insurance Company	Sioux Falls	SD
The First Western Bank Sturgis	Sturgis	SD
Commercial State Bank	Wagner	SD
The First Western Bank	Wall	SD
Principal Mortgage Reinsurance Company	Burlington	VT

Federal Home Loan Bank of Dallas—District 9

Elk Horn Bank & Trust Company	Arkadelphia	AR
FNBC	Ash Flat	AR
Heartland Community Bank	Camden	AR
Corning Savings and Loan Association	Corning	AR
Merchants and Farmers Bank	Dumas	AR
Planters & Merchants Bank	Gillett	AR
Calhoun County Bank	Hampton	AR
Community First Bank	Harrison	AR
First Arkansas Bank & Trust	Jacksonville	AR
Pulaski Bank and Trust Company	Jonesboro	AR
One Bank & Trust	Little Rock	AR
Arkansas Bankers' Bank	Little Rock	AR
Farmers Bank & Trust Company	Magnolia	AR
Union Bank and Trust Company	Monticello	AR
Diamond Bank	Murfreesboro	AR
Priority Bank	Ozark	AR
First National Bank	Paragould	AR
Bank of Rogers	Rogers	AR
United Bank	Springdale	AR
The Bank of Star City	Star City	AR
Farmers & Merchants Bank	Stuttgart	AR
Abbeville Building & Loan, a State Chartered Savings Bank	Abbeville	LA
First National Bank USA	Boutte	LA
Community Trust Bank	Choudrant	LA
Citizens Progressive Bank	Columbia	LA
Statewide Bank	Covington	LA
Beauregard Federal Savings Bank	DeRidder	LA
United Community Bank	Gonzales	LA
Central Progressive Bank	Lacombe	LA
Home Bank	Lafayette	LA
First Federal Bank of Louisiana	Lake Charles	LA
The Union Bank	Marksville	LA
Bank of New Orleans	Metairie	LA
MVL Bank	Minden	LA
Iberia Bank	New Iberia	LA
Fidelity Homestead Savings Bank	New Orleans	LA
Fifth District Savings Bank	New Orleans	LA
Dryades Savings Bank, FSB	New Orleans	LA
Crescent Bank & Trust	New Orleans	LA
Union Savings and Loan Association	New Orleans	LA
First Financial Bank & Trust Company	Plaquemine	LA

Plaquemine Bank & Trust Company	Plaquemine	LA
Citizens Bank & Trust Company	Plaquemine	LA
Rayne Building and Loan Association	Rayne	LA
Citizens Bank and Trust Company	Springhill	LA
Bank of Zachary	Zachary	LA
Magnolia State Bank	Bay Springs	MS
First Bank & Trust of MS	Biloxi	MS
State Bank & Trust Company	Brookhaven	MS
BankFirst Financial Services	Columbus	MS
Grand Bank for Savings, F.S.B.	Hattiesburg	MS
The First, A National Banking Association	Hattiesburg	MS
Trustmark National Bank	Jackson	MS
OmniBank	Jackson	MS
Bank of New Albany	New Albany	MS
Bank of Okolona	Okolona	MS
First Federal Savings & Loan	Pascagoula	MS
First National Bank of Pontotoc	Pontotoc	MS
Bank of Yazoo City	Yazoo City	MS
Bank 34	Alamogordo	NM
Union Savings Bank	Albuquerque	NM
Charter Bank	Albuquerque	NM
1st National Bank	Artesia	NM
The First National Bank of New Mexico	Clayton	NM
Western Bank of Clovis	Clovis	NM
Citizens Bank of Las Cruces	Las Cruces	NM
Community 1st Bank Las Vegas	Las Vegas	NM
The Bank of Las Vegas	Las Vegas	NM
Century Bank	Santa Fe	NM
Firstbank Southwest, National Association	Amarillo	TX
Happy State Bank	Amarillo	TX
Southwest Securities Bank, FSB	Arlington	TX
Affiliated Bank, FSB	Arlington	TX
Amplify Federal Credit Union	Austin	TX
The First National Bank of Beeville	Beeville	TX
The Brenham National Bank	Brenham	TX
Texas Bank	Brownwood	TX
Shelby Savings Bank, ssb	Center	TX
Chappell Hill Bank	Chappell Hill	TX
The First National Bank of Chillicothe	Chillicothe	TX
First Bank of West Texas	Coahoma	TX
The First State Bank	Columbus	TX
First Bank of Conroe, N.A.	Conroe	TX
Charter Bank Northwest	Corpus Christi	TX
Meridian Bank Texas	Corpus Christi	TX
First Security State Bank	Cranfills Gap	TX
Citizens National Bank	Crockett	TX
First National Bank of Crockett	Crockett	TX
TrustTexas Bank, SSB	Cuero	TX
Dalhart Federal Savings and Loan Association	Dalhart	TX
First State Bank	Dalhart	TX
First National Bank in Dalhart	Dalhart	TX
Inwood National Bank	Dallas	TX
Preston National Bank	Dallas	TX
Prosperity Bank	El Campo	TX
First Command Bank	Fort Worth	TX
Colonial Savings, F.A.	Fort Worth	TX
National Bank	Gatesville	TX
Gladewater National Bank	Gladewater	TX
Henderson Federal Savings Bank	Henderson	TX
Franklin Bank, SSB	Houston	TX
Houston Community Bank, N.A.	Houston	TX
Justin State Bank	Justin	TX
Fayette Savings Bank, ssb	La Grange	TX
National Bank & Trust	La Grange	TX
Falcon National Bank	Laredo	TX
Commerce Bank	Laredo	TX
Texas Bank and Trust	Longview	TX
Spring Hill State Bank	Longview	TX
East Texas Professional Credit Union	Longview	TX
First State Bank	Louise	TX
Lubbock National Bank	Lubbock	TX
First Bank & Trust Company	Lubbock	TX
Angelina Savings Bank, FSB	Lufkin	TX
First National Bank of Mount Vernon	Mount Vernon	TX
Guaranty Bond Bank	Mt. Pleasant	TX
First National Bank in Munday	Munday	TX

The Morris County National Bank	Naples	TX
First Federal Community Bank	Paris	TX
Peoples Bank	Paris	TX
Gulf Coast Educators FCU	Pasadena	TX
PointBank	Pilot Point	TX
Pilgrim Bank	Pittsburg	TX
Wood County National Bank	Quitman	TX
Woodforest Bank	Refugio	TX
Robert Lee State Bank	Robert Lee	TX
First Community Bank San Antonio, NA	San Antonio	TX
Citizens State Bank	Sealy	TX
Alliance Bank	Sulphur Springs	TX
First State Bank Central Texas	Temple	TX
American National Bank of Texas	Terrell	TX
Citizens 1st Bank	Tyler	TX
First Federal Bank Texas	Tyler	TX
The First National Bank of Weatherford	Weatherford	TX
Hill Bank & Trust Company	Weimar	TX
American National Bank	Wichita Falls	TX

Federal Home Loan Bank of Topeka—District 10

San Luis Valley Federal Bank	Alamosa	CO
Valley Bank & Trust Company	Brighton	CO
Collegiate Peaks Bank	Buena Vista	CO
Farmers State Bank of Calhan	Calhan	CO
Castle Rock Bank	Castle Rock	CO
Colorado Capital Bank	Castle Rock	CO
FirstBank of Colorado Springs	Colorado Springs	CO
Pikes Peak National Bank	Colorado Springs	CO
Peoples National Bank	Colorado Springs	CO
Vectra Bank Colorado	Denver	CO
First National Bank of Durango	Durango	CO
High Plains Bank	Flagler	CO
Rocky Mountain Bank and Trust	Florence	CO
First National Bank	Fort Collins	CO
Morgan Federal Bank	Fort Morgan	CO
Home Loan State Bank	Grand Junction	CO
Community Banks of Colorado	Greenwood Village	CO
Colorado Federal Savings Bank	Greenwood Village	CO
Gunnison Savings and Loan Association	Gunnison	CO
First National Bank in Lamar	Lamar	CO
Colorado East Bank & Trust	Lamar	CO
Rio Grande Savings and Loan Association	Monte Vista	CO
Montrose Bank	Montrose	CO
The First National Bank of Ordway	Ordway	CO
Paonia State Bank	Paonia	CO
Southern Colorado NB	Pueblo	CO
Yampa Valley Bank	Steamboat Springs	CO
Century Savings & Loan Association	Trinidad	CO
Park State Bank & Trust	Woodland Park	CO
The First National Bank of Anthony	Anthony	KS
New Century Bank	Belleville	KS
Peoples Exchange Bank	Belleville	KS
Guaranty State Bank & Trust Company	Beloit	KS
State Bank of Burton	Burton	KS
Caldwell State Bank in Caldwell	Caldwell	KS
First National Bank in Cimarron	Cimarron	KS
The Elk State Bank	Clyde	KS
Flint Hills Bank	Eskridge	KS
Citizens Bank NA	Fort Scott	KS
Girard National Bank	Girard	KS
Farmers Bank & Trust, N.A.	Great Bend	KS
Golden Belt Bank, FSA	Hays	KS
Citizens State Bank and Trust Company	Hiawatha	KS
State Bank	Hoxie	KS
Central Bank and Trust Company	Hutchinson	KS
Central National Bank	Junction City	KS
Argentine Federal Savings	Kansas City	KS
Industrial State Bank	Kansas City	KS
Inter-State FS&LA of Kansas City	Kansas City	KS
Citizens Bank of Kansas, N.A.	Kingman	KS
Kanza Bank	Kingman	KS
First State Bank	Kiowa	KS
Kearney County Bank	Lakin	KS
The University National Bank	Lawrence	KS

Mutual Savings Association, FSA	Leavenworth	KS
Citizens Savings and Loan Association, FSB	Leavenworth	KS
US Central FCU	Lenexa	KS
The State Exchange Bank	Mankato	KS
The Citizens State Bank	Moundridge	KS
First Bank of Newton	Newton	KS
Midland National Bank	Newton	KS
First State Bank	Norton	KS
Security Savings Bank, FSB	Olathe	KS
First FS&LA of Olathe	Olathe	KS
First Option Bank	Osawatomie	KS
Bank of Blue Valley	Overland Park	KS
Peabody State Bank	Peabody	KS
The Plains State Bank	Plains	KS
The Peoples Bank	Pratt	KS
Valley State Bank	Roeland Park	KS
The Roxbury Bank	Roxbury	KS
First Bank Kansas	Salina	KS
Stanley Bank	Stanley	KS
Stockton National Bank	Stockton	KS
Thunder Bank	Sylvan Grove	KS
First National Bank	Syracuse	KS
The Bank of Tescott	Tescott	KS
Alliance Bank	Topeka	KS
Heritage Bank	Topeka	KS
Silver Lake Bank	Topeka	KS
Capitol Federal Savings Bank	Topeka	KS
Kendall State Bank	Valley Falls	KS
FNB in Wellington	Wellington	KS
The Bank of Commerce & Trust Company	Wellington	KS
SNB Bank of Wichita, FSB	Wichita	KS
Garden Plain State Bank	Wichita	KS
Banker's Bank of Kansas, NA	Wichita	KS
Southwest NB of Wichita	Wichita	KS
Commerce Bank, N.A.	Wichita	KS
Western Heritage Credit Union	Alliance	NE
Community Bank	Alma	NE
Farmers & Merchants National Bank	Ashland	NE
Auburn State Bank	Auburn	NE
Bruning State Bank	Bruning	NE
Butte State Bank	Butte	NE
South Central State Bank	Campbell	NE
Clarkson Bank	Clarkson	NE
Nebraska Energy Federal Credit Union	Columbus	NE
First National Bank & Trust Company	Columbus	NE
American Interstate Bank	Elkhorn	NE
Cedar Security Bank	Fordyce	NE
Genoa National Bank	Genoa	NE
Kearney FCU	Kearney	NE
Pinnacle Bank	Lincoln	NE
TierOne Bank	Lincoln	NE
Security Home Bank	Malmo	NE
Arbor Bank	Nebraska City	NE
The Nehawka Bank	Nehawka	NE
Security National Bank of Omaha	Omaha	NE
Enterprise Bank, NA	Omaha	NE
First Comp Insurance Company	Omaha	NE
Platte Valley National Bank	Scottsbluff	NE
First National Bank	Sidney	NE
Siouxland FCU	South Sioux City	NE
Horizon Bank	Waverly	NE
FNB of Wayne	Wayne	NE
NBC Oklahoma	Altus	OK
Anadarko Bank and Trust Company	Anadarko	OK
First National Bank & Trust	Ardmore	OK
Citizens Security Bank & Trust Company	Bixby	OK
Community Bank	Bristow	OK
Chickasha Bank and Trust Company	Chickasha	OK
First Bank & Trust Company	Clinton	OK
Oklahoma Bank & Trust Company	Clinton	OK
American Bank of Oklahoma	Collinsville	OK
First Texoma National Bank	Durant	OK
Citizens Bank of Edmond	Edmond	OK
First National Bank of Elk City	Elk City	OK
Fort Sill NB	Fort Sill	OK
Oklahoma State Bank	Guthrie	OK

Bank of the Panhandle	Guymon	OK
Legacy Bank	Hinton	OK
McCurtain County National Bank	Idabel	OK
The First State Bank	Keyes	OK
City National Bank & Trust Company	Lawton	OK
First National Bank in Marlow	Marlow	OK
Republic Bank & Trust	Norman	OK
Community National Bank of Okarche	Okarche	OK
American Reserve Life Insurance Company	Oklahoma City	OK
BancFirst	Oklahoma City	OK
The Bankers Bank	Oklahoma City	OK
The Okmulgee Savings and Loan Association	Okmulgee	OK
Lakeside State Bank	Oologah	OK
Bank of the Lakes, N.A.	Owasso	OK
First National Bank of Oklahoma	Ponca City	OK
First State Bank of Porter	Porter	OK
First American Bank	Purcell	OK
The Farmers State Bank	Quinton	OK
First National Bank & Trust Company	Shawnee	OK
Community Bank of Arbuckles	Sulphur	OK
ONB Bank and Trust Company	Tulsa	OK
Valley National Bank	Tulsa	OK
Tulsa Teacher Credit Union	Tulsa	OK
Triad Bank, N.A.	Tulsa	OK
ONB Bank & Trust Company	Tulsa	OK
Summit Bank	Tulsa	OK
The First National Bank of Vinita	Vinita	OK
Security State Bank Wewoka	Wewoka	OK
Plarte Valley National Bank	Torrington	WY

Federal Home Loan Bank of San Francisco—District 11

Copper Star Bank	Scottsdale	AZ
Evertrust Bank	City of Industry	CA
Pacific Premier Bank	Costa Mesa	CA
Xceed Financial Credit Union	El Segundo	CA
First Commerce Bank	Encino	CA
Fremont Bank	Fremont	CA
Fullerton Community Bank	Fullerton	CA
American First Credit Union	La Habra	CA
Silvergate Bank	La Jolla	CA
Borrego Springs Bank, N.A.	La Mesa	CA
International City Bank	Long Beach	CA
Preferred Bank	Los Angeles	CA
Broadway Federal Bank, f.s.b.	Los Angeles	CA
California National Bank	Los Angeles	CA
National Bank of California	Los Angeles	CA
Monterey County Bank	Monterey	CA
Oak Valley Community Bank	Oakdale	CA
Summit Bank	Oakland	CA
Metropolitan Bank	Oakland	CA
Palm Desert National Bank	Palm Desert	CA
Malaga Bank SSB	Palos Verdes Estates	CA
Community Bank	Pasadena	CA
El Dorado Savings Bank	Placerville	CA
Sterlent Credit Union	Pleasanton	CA
PFF Bank & Trust	Pomona	CA
North Valley Bank	Redding	CA
The Golden 1 Credit Union	Sacramento	CA
East West Bank	San Marino	CA
First FS&LA of San Rafael	San Rafael	CA
First Federal Bank of California, F.S.B.	Santa Monica	CA
Summit State Bank	Santa Rosa	CA
Mission Oaks National Bank	Temecula	CA
Temecula Valley Bank, NA	Temecula	CA
Sunwest Bank	Tustin	CA
Travis CU	Vacaville	CA
Desert Community Bank	Victorville	CA
First Financial Credit Union	West Covina	CA
Bank of America California, NA	Charlotte	NC
Washington Mutual Bank, Inc.	Seattle	WA

Federal Home Loan Bank of Seattle—District 12

First National Bank Alaska	Anchorage	AK
Northrim Bank	Anchorage	AK

Mt. McKinley Bank	Fairbanks	AK
Spirit of Alaska FCU	Fairbanks	AK
BankPacific, Ltd.	Hagatna	GU
Bank of Guam	Hagatna	GU
Hawaii State Federal Credit Union	Honolulu	HI
Finance Factors, Limited	Honolulu	HI
American Savings Bank	Honolulu	HI
Mountain West Bank	Coeur D'Alene	ID
The Bank of Commerce	Idaho Falls	ID
Ireland Bank	Malad City	ID
First FSB of Twin Falls	Twin Falls	ID
Wells Fargo Bank Northwest, N.A.	Minneapolis	MN
United Banks, N.A.	Absarokee	MT
First Security Bank of Bozeman	Bozeman	MT
Big Sky Western Bank	Bozeman	MT
Pioneer FS&LA	Dillon	MT
Ravalli County Bank	Hamilton	MT
American Federal Savings Bank	Helena	MT
Glacier Bank	Kalispell	MT
First Security Bank of Malta	Malta	MT
Stockman Bank of Montana	Miles City	MT
Glacier Bank of Whitefish	Whitefish	MT
Bank of Astoria	Astoria	OR
Pacific Continental Bank	Eugene	OR
First FS&LA of McMinnville	McMinnville	OR
Albina Community Bank	Portland	OR
Community First Bank	Prineville	OR
Columbia River Bank	The Dalles	OR
Bank of American Fork	American Fork	UT
Home Savings Bank	Salt Lake City	UT
TransWest Credit Union	Salt Lake City	UT
Horizon Bank	Bellingham	WA
Cascade Bank	Everett	WA
Bank of Fairfield	Fairfield	WA
Timberland Bank	Hoquiam	WA
Kitsap Bank	Port Orchard	WA
Valley Bank	Puyallup	WA
Raymond Federal Bank	Raymond	WA
First Savings Bank of Northwest	Renton	WA
Washington First International Bank	Seattle	WA
Washington Federal Savings	Seattle	WA
Evergreen Bank	Seattle	WA
HomeStreet Bank	Seattle	WA
Sterling Savings Bank	Spokane	WA
The Bank of Star Valley	Afton	WY
Buffalo Federal Savings Bank	Buffalo	WY
Hilltop National Bank	Casper	WY
Big Horn Federal Savings Bank	Greybull	WY
Oregon Trail Bank	Guernsey	WY
Pinnacle Bank—Wyoming	Torrington	WY

II. Public Comments

To encourage the submission of public comments on the community support performance of Bank members, on or before October 24, 2008, each Bank will notify its Advisory Council and nonprofit housing developers, community groups, and other interested parties in its district of the members selected for community support review in the 2008–09 third quarter review cycle. 12 CFR 944.2(b)(2)(ii). In reviewing a member for community support compliance, the FHFA will consider any public comments it has received concerning the member. 12 CFR 944.2(d). To ensure consideration by the FHFA, comments concerning the community support performance of members selected for the 2008–09 third quarter review cycle must be delivered to the FHFA on or before the November 21, 2008 deadline for submission of Community Support Statements.

Dated: October 3, 2008.

Janice A. Kaye,

Associate General Counsel.

[FR Doc. E8–24719 Filed 10–14–08; 4:15 pm]

BILLING CODE 8070–01–P

FEDERAL RESERVE SYSTEM

Change in Bank Control Notices; Acquisition of Shares of Bank or Bank Holding Companies

The notificants listed below have applied under the Change in Bank Control Act (12 U.S.C. 1817(j)) and § 225.41 of the Board's Regulation Y (12 CFR 225.41) to acquire a bank or bank holding company. The factors that are considered in acting on the notices are set forth in paragraph 7 of the Act (12 U.S.C. 1817(j)(7)).

The notices are available for immediate inspection at the Federal Reserve Bank indicated. The notices also will be available for inspection at the office of the Board of Governors. Interested persons may express their views in writing to the Reserve Bank indicated for that notice or to the offices of the Board of Governors. Comments must be received not later than November 4, 2008.

A. Federal Reserve Bank of St. Louis (Glenda Wilson, Community Affairs Officer) P.O. Box 442, St. Louis, Missouri 63166–2034:

1. Douglas and Theresa Kelly, Ray E. Cahalan Family Trust with Theresa Kelly and Jacquline Niedergerke as co–trustees, all of Kirksville, Missouri; Gary Kelly, Aspen, Colorado; and William and Kathleen Moffett, Golden, Colorado, as a group acting in concert to retain control of Kirksville, Bancorp, Inc., and thereby indirectly retain control of American Trust Bank, both of Kirksville, Missouri.

Board of Governors of the Federal Reserve System, October 15, 2008.

Robert deV. Frierson,

Deputy Secretary of the Board.

[FR Doc. E8–24854 Filed 10–17–08; 8:45 am]

BILLING CODE 6210–01–S

FEDERAL RESERVE SYSTEM

Formations of, Acquisitions by, and Mergers of Bank Holding Companies

The companies listed in this notice have applied to the Board for approval, pursuant to the Bank Holding Company Act of 1956 (12 U.S.C. 1841 *et seq.*) (BHC Act), Regulation Y (12 CFR Part 225), and all other applicable statutes and regulations to become a bank holding company and/or to acquire the assets or the ownership of, control of, or the power to vote shares of a bank or bank holding company and all of the banks and nonbanking companies owned by the bank holding company, including the companies listed below.

The applications listed below, as well as other related filings required by the Board, are available for immediate inspection at the Federal Reserve Bank indicated. The applications also will be available for inspection at the offices of the Board of Governors. Interested persons may express their views in writing on the standards enumerated in the BHC Act (12 U.S.C. 1842(c)). If the proposal also involves the acquisition of a nonbanking company, the review also includes whether the acquisition of the nonbanking company complies with the standards in section 4 of the BHC Act (12 U.S.C. 1843). Unless otherwise noted, nonbanking activities will be conducted throughout the United States. Additional information on all bank holding companies may be obtained from the National Information Center website at *www.ffiec.gov/nic/*.

Unless otherwise noted, comments regarding each of these applications must be received at the Reserve Bank indicated or the offices of the Board of Governors not later than November 14, 2008.

A. Federal Reserve Bank of Richmond (A. Linwood Gill, III, Vice President) 701 East Byrd Street, Richmond, Virginia 23261–4528:

1. Coastal Carolina Bancshares, Inc., to become a bank holding company by acquiring 100 percent of the voting shares of Coastal Carolina National Bank, both of Myrtle Beach, South Carolina (in organization).

Board of Governors of the Federal Reserve System, October 15, 2008.

Robert deV. Frierson,

Deputy Secretary of the Board.

[FR Doc. E8–24853 Filed 10–17–08; 8:45 am]

BILLING CODE 6210–01–S

FEDERAL RESERVE SYSTEM

Notice of Proposals To Engage in Permissible Nonbanking Activities or To Acquire Companies That Are Engaged in Permissible Nonbanking Activities

The companies listed in this notice have given notice under section 4 of the Bank Holding Company Act (12 U.S.C. 1843) (BHC Act) and Regulation Y (12 CFR Part 225) to engage *de novo*, or to acquire or control voting securities or assets of a company, including the companies listed below, that engages either directly or through a subsidiary or other company, in a nonbanking activity that is listed in § 225.28 of Regulation Y (12 CFR 225.28) or that the Board has determined by Order to be closely related to banking and permissible for bank holding companies. Unless otherwise noted, these activities will be conducted throughout the United States.

Each notice is available for inspection at the Federal Reserve Bank indicated. The notice also will be available for inspection at the offices of the Board of Governors. Interested persons may express their views in writing on the question whether the proposal complies with the standards of section 4 of the BHC Act. Additional information on all bank holding companies may be obtained from the National Information Center website at *www.ffiec.gov/nic/*.

Unless otherwise noted, comments regarding the applications must be received at the Reserve Bank indicated or the offices of the Board of Governors not later than November 4, 2008.

A. Federal Reserve Bank of Atlanta (Steve Foley, Vice President) 1000 Peachtree Street, NE., Atlanta, Georgia 30309:

1. Regent Bancorp, Inc., Davie, Florida, to acquire 100 percent of the voting shares of Regent Bank, Greenville, South Carolina (in organization), and thereby indirectly engage in operating a savings association, pursuant to section 225.28(b)(4)(ii) of Regulation Y. Comments regarding this application must be received not later than November 14, 2008.

B. Federal Reserve Bank of Chicago (Burl Thornton, Assistant Vice President) 230 South LaSalle Street, Chicago, Illinois 60690–1414:

1. Broadway Bancorp, Inc., Chicago, Illinois, to engage *de novo* in extending credit and servicing loans, pursuant to section 225.28(b)(1) of Regulation Y.

Board of Governors of the Federal Reserve System, October 15, 2008.

Robert deV. Frierson,

Deputy Secretary of the Board.

[FR Doc. E8–24852 Filed 10–17–08; 8:45 am]

BILLING CODE 6210–01–S

FEDERAL TRADE COMMISSION

Granting of Request for Early Termination of the Waiting Period Under the Premerger Notification Rules

Section 7A of the Clayton Act, 15 U.S.C. 18a, as added by Title II of the Hart-Scott Rodino Antitrust Improvements Act of 1976, requires persons contemplating certain mergers or acquisitions to give the Federal Trade Commission and the Assistant Attorney General advance notice and to wait designated periods before consummation of such plans. Section 7A(b)(2) of the Act permits the agencies, in individual cases, to terminate this waiting period prior to its expiration and requires that notice of this action be published in the **Federal Register**.

The following transactions were granted early termination of the waiting period provided by law and the premerger notification rules. The grants were made by the Federal Trade Commission and the Assistant Attorney General for the Antitrust Division of the Department of Justice. Neither agency intends to take any action with respect to these proposed acquisitions during the applicable waiting period.

Trans No.	Acquiring	Acquired	Entities
Transactions Granted Early Termination—06/16/2008			
20081021	CME Group Inc.	NYMEX Holdings, Inc.	NYMEX Holdings, Inc.
20081281	The Hearst Family Trust	NewCo, LLC	NewCo, LLC.
20081312	JPMorgan Chase & Co.	Caxton-Iseman (NAHP), L.P.	Caxton-Iseman (NAHP), L.P.
20081315	First BanCorp	CG Investor, LLC	DaimlerChrysler Financial Services Caribbean, LLC.
Transactions Granted Early Termination—06/17/2008			
20081274	Illinois Tool Works, Inc.	Coller International Partners IV–D, L.P	QSA Global, Inc.
20081275	ING Groep N.V.	State Street Corporation	CitiStreet LLC.
20081276	ING Groep N.V.	Citigroup Inc.	CitiStreet LLC.
20081310	Bain Capital X, L.P.	American Capital Strategies, Ltd.	Contec Holdings, Ltd.
20081313	The Goldman Sachs Group, Inc.	Bank of America Corporation	CIVC Partners IIA, L.P.
Transactions Granted Early Termination—06/18/2008			
20081308	Sageview Capital Master, L.P.	EverBank Financial Corp	EverBank Financial Corp.
20081327	Providence Equity Partners V L.P.	Education Management Corporation	Education Management Corporation.
Transactions Granted Early Termination—06/20/2008			
20081306	Lehman Brothers Partners IV L.P.	Angelica Corporation	Angelica Corporation.
20081317	S.A.C. Private Equity Investors, L.P.	Koninklijke Philips Electronics N.V.	MedQuist Inc.
20081319	Carousel Capital Partners III L.P.	Xinhua Finance Limited	Mergent, Inc.
20081320	Great Wisconsin Credit Union	Summit Credit Union	Summit Credit Union.
20081324	Leeds Equity Partners IV, L.P.	Education Management Corporation	Education Management Corporation.
20081326	Newhouse Broadcasting Corporation	Discovery Communications, Inc.	Discovery Communications, Inc.
20081328	GS Capital Partners V, L.P.	Education Management Corporation	Education Management Corporation.
20081332	Emerson Electric Co.	General Equipment and Manufacturing Company, Inc.	General Equipment and Manufacturing Company, Inc.
20081339	Wellspring Capital Partners IV, L.P.	NC Limited Partner Holdings, LLC	Cleaver-Holdings, Inc.
20081344	Johnson Controls, Inc.	Julie Nguyen Brown	Plastic Engineered Products, Inc.
20081348	Jones Lang LaSalle Incorporated	Staubach Holdings, Inc.	Staubach Holdings, Inc.
20081349	TP Group 2007–B, L.P.	Walter S. Lutz, Jr.	Signicast Corporation.
Transactions Granted Early Termination—06/23/2008			
20081242	Cablevision Systems Corporation	NMG Company, LLC	NMG Company, LLC.
20081279	SPO Partners II, L.P.	Reilly Family Limited Partnership	Lamar Advertising Company.
Transactions Granted Early Termination—06/24/2008			
20081272	Ashland Inc.	Air Products and Chemicals, Inc.	Air Products and Chemicals, Inc.
20081298	USRG Power & Biofuels Fund II, L.P	Renewable Energy Group, Inc.	Renewable Energy Group, Inc.
20081307	XTO Energy Inc.	Timothy C. Headington	Headington Oil Company LLC. Nesson Gathering System, LLC.
20081316	Macquarie Group Limited	Express Energy Services Holding, LP	Express Energy Services Holding, LP.
20081323	Hologic, Inc.	Third Wave Technologies, Inc.	Third Wave Technologies, Inc.
20081330	Phillip Ean Cohen	Value Financial Services, Inc.	Value Financial Services, Inc.
20081335	Sierra Pacific Resources	Reliant Energy, Inc.	Reliant Energy Asset Management, LLC. Reliant Energy Wholesale Generation, LLC.
20081336	Societe Cooperative Agricole Champagne Cereales.	Archer-Daniels-Midland Company	ADM Malting, LLC.
20081361	Olympus Growth Fund IV, L.P	Ernest Edward & Ann Zinke	Ann's House of Nuts, Inc.
Transactions Granted Early Termination—06/25/2008			
20081305	GulfMark Offshore, Inc.	Rigdon Marine Holdings, L.L.C.	Rigdon Marine Corporation.
20081342	TPF II, L.P.	Dynegy Inc.	Rolling Hills Generating, LLC.
20081352	Burger King Holdings, Inc.	Michael Simmonds and Linda Simmonds.	Simmonds Restaurant Management, Inc. SRF Holdings L.L.C. SR of Iowa, L.L.C.
Transactions Granted Early Termination—06/26/2008			
20080269	Banner Health	Sun Health Corporation	Sun Health Corporation. Sun Health Research Institute.
20081333	FTI Consulting, Inc.	TOP–2005, LLC	Attenex Corporation.

Trans No.	Acquiring	Acquired	Entities
Transactions Granted Early Termination—06/27/2008			
20081257	Comtech Telecommunications Corp.	Radyne Corporation	Radyne Corporation.

FOR FURTHER INFORMATION CONTACT: Sandra M. Peay, Contact Representative, or Renee Hallman, Contact Representative, Federal Trade Commission, Premerger Notification Office, Bureau of Competition, Room H–303, Washington, DC 20580, (202) 326–3100.

By Direction of the Commission.

Donald S. Clark,

Secretary.

[FR Doc. E8–24649 Filed 10–17–08; 8:45 am]

BILLING CODE 6750–01–M

DEPARTMENT OF HEALTH AND HUMAN SERVICES

National Vaccine Advisory Committee

AGENCY: Department of Health and Human Services, Office of the Secretary, Office of Public Health and Science.

ACTION: Notice.

Authority: 42 U.S.C. 300aa–5, Section 2105 of the Public Health Service (PHS) Act, as amended. The Committee is governed by the provisions of Public Law 92–463, as amended (5 U.S.C. Appendix 2), which sets forth standards for the formation and use of advisory committees.

SUMMARY: The National Vaccine Program Office (NVPO), a program office within the Office of Public Health and Science, DHHS, is soliciting nominations of qualified candidates to be considered for appointment as members to the National Vaccine Advisory Committee (NVAC). The activities of this Committee are governed by the Federal Advisory Committee Act (FACA).

Consistent with the National Vaccine Plan, the Committee advises and makes recommendations to the Assistant Secretary for Health in his capacity as the Director of the National Vaccine Program, on matters related to the Program's responsibilities. Specifically, the Committee studies and recommends ways to encourage the availability of an adequate supply of safe and effective vaccination products in the United States, and recommends research priorities and other measures to enhance the safety and efficacy of vaccines. The Committee also advises the Assistant Secretary for Health in the implementation of Sections 2102 and 2103 of the PHS Act; and identifies annually the most important areas of government and non-government cooperation that should be considered in implementing Sections 2102 and 2103 of the PHS Act.

DATES: Nominations for membership on the Committee must be received no later than 5 p.m. EDT on November 21, 2008, at the address below.

ADDRESSES: All nominations should be mailed or delivered to: Bruce G. Gellin, MD, MPH, Executive Secretary, NVAC, Office of Public Health and Science, Department of Health and Human Services, 200 Independence Avenue, SW., Room 443–H, Hubert H. Humphrey Building, Washington, DC 20201.

FOR FURTHER INFORMATION CONTACT: Ms. Andrea Krull, Public Health Advisor, National Vaccine Program Office, Department of Health and Human Services, 200 Independence Avenue, SW., Room 443–H, Hubert H. Humphrey Building, Washington, DC 20201; (202) 690–5566; *nvpo@hhs.gov.*

A copy of the Committee charter which includes the Committee's structure and functions as well as a list of the current membership can be obtained by contacting Ms. Krull or by accessing the NVAC Web site at: *www.hhs.gov/nvpo/nvac.*

SUPPLEMENTARY INFORMATION:

Committee Function, Qualifications, and Information Required: As part of an ongoing effort to enhance deliberations and discussions with the public on vaccine and immunization policy, nominations are being sought for interested individuals to serve on the Committee. Individuals selected for appointment to the Committee will serve as voting members. Public members shall be selected from individuals who are engaged in vaccine research or the manufacture of vaccines, or who are physicians, members of parent organizations concerned with immunizations, representatives of state or local health agencies or public health organizations. Representative members shall be selected from the vaccine manufacturing industry who are engaged in vaccine research or the manufacture of vaccines. Anticipated vacancies include both public and representative member positions. Individuals selected for appointment to the Committee can be invited to serve terms of up to four years.

Nominations should be typewritten. The following information should be included in the package of material submitted for each individual being nominated for consideration: (1) A letter of nomination that clearly states the name and affiliation of the nominee, the basis for the nomination (*i.e.* , specific attributes which qualify the nominee for service in this capacity), and a statement that the nominee is willing to serve as a member of the Committee; (2) the nominator's name, address and daytime telephone number, and the home and/or work address, telephone number, and e-mail address of the individual being nominated; and (3) a current copy of the nominee's curriculum vitae. Applications cannot be submitted by facsimile. The names of Federal employees should not be nominated for consideration of appointment to this Committee.

The Department makes every effort to ensure that the membership of HHS Federal advisory committees is fairly balanced in terms of points of view represented and the committee's function. Every effort is made that a broad representation of geographic areas, gender, ethnic and minority groups, and the disabled are given consideration for membership on HHS Federal advisory committees. Appointment to this committee shall be made without discrimination on the basis of age, race, ethnicity, gender, sexual orientation, disability, and cultural, religious, or socioeconomic status.

The Standards of Ethical Conduct for Employees of the Executive Branch are applicable to individuals who are appointed as public members of Federal advisory committees. Individuals appointed to serve as public members of Federal advisory committees are classified as special Government employees (SGEs). SGEs are Government employees for purposes of the conflict of interest laws. Therefore, individuals appointed to serve as public members of NVAC are subject to an ethics review. The ethics review is conducted to determine if the individual has any interests and/or activities in the private sector that may conflict with performance of their official duties as a member of the Committee. Individuals appointed to serve as public members of the

Committee will be required to disclose information regarding financial holdings, consultancies, and research grants and/or contracts.

Dated: October 6, 2008.

Bruce Gellin,

Director, National Vaccine Program Office, Executive Secretary, National Vaccine Advisory Committee.

[FR Doc. E8–24893 Filed 10–17–08; 8:45 am]

BILLING CODE 4150–44–P

DEPARTMENT OF HEALTH AND HUMAN SERVICES

Meeting of the National Biodefense Science Board

AGENCY: Department of Health and Human Services, Office of the Secretary.

ACTION: Notice.

SUMMARY: As stipulated by the Federal Advisory Committee Act, the U.S. Department of Health and Human Services is hereby giving notice that the National Biodefense Science Board (NBSB) will be holding a public meeting. The meeting is open to the public.

DATES: The NBSB will hold a public meeting on November 18, 2008 from 8:30 a.m. to 5 p.m. EST and on November 19, 2008 from 8:30 a.m. to 12:30 p.m.

ADDRESSES: The Sheraton National Hotel, 900 S. Orme Street, Arlington, VA 22204.

Phone: 703–521–1900.

FOR FURTHER INFORMATION CONTACT: CAPT Leigh A. Sawyer, D.V.M., M.P.H., Executive Director, National Biodefense Science Board, Office of the Assistant Secretary for Preparedness and Response, U.S. Department of Health and Human Services, 200 Independence Ave., SW., Room 638G, Washington, DC 20201; 202–205–3815; *fax:* 202–205–0613; *e-mail address: leigh.sawyer@hhs.gov.*

SUPPLEMENTARY INFORMATION: Pursuant to section 319M of the Public Health Service Act (42 U.S.C. 247d–7f) and section 222 of the Public Health Service Act (42 U.S.C. 217a), the Department of Health and Human Services established the National Biodefense Science Board. The Board shall provide expert advice and guidance to the Secretary on scientific, technical, and other matters of special interest to the Department of Health and Human Services regarding current and future chemical, biological, nuclear, and radiological agents, whether naturally occurring, accidental, or deliberate. The Board may also provide advice and guidance to the Secretary on other matters related to public health emergency preparedness and response.

The NBSB will consider recommendations prepared by the Disaster Mental Health Subcommittee. The Subcommittee was established by the NBSB to help fulfill the requirement of HSPD–21, paragraph 31, which directs the Secretary, U.S. Department of Health and Human Services, to convene a committee of subject matter experts and, to submit to the Secretary of Health and Human Services recommendations for protecting, preserving, and restoring individual and community mental health in catastrophic health event settings, including pre-event, intra-event, and post-event education, messaging, and interventions.

Additional topics will be considered during the public meeting. A tentative schedule will be made available on November 1, 2008 at the NBSB Web site, *http://www.hhs.gov/aspr/omsph/nbsb.* This agenda is subject to change as priorities dictate.

Any member of the public interested in presenting oral comments at the meeting may notify the Contact person listed on this notice by November 10, 2008. Interested individuals and representatives of an organization may submit a letter of intent and a brief description of the organization represented. In addition, any interested person may file written comments with the committee. All written comments must be received prior to November 10, 2008 and should be sent by e-mail with ''NBSB Public Comment'' as the subject line or by regular mail to the Contact person listed above. Individuals who plan to attend and need special assistance, such as sign language interpretation or other reasonable accommodations, should notify the designated contact person.

August 8, 2008.

William C. Vanderwagen,

Assistant Secretary for Preparedness and Response, U.S. Department of Health and Human Services.

[FR Doc. E8–24843 Filed 10–17–08; 8:45 am]

BILLING CODE 4150–37–P

DEPARTMENT OF HEALTH AND HUMAN SERVICES

Administration for Children and Families

President's Committee for People With Intellectual Disabilities; Notice of Meeting

AGENCY: President's Committee for People with Intellectual Disabilities (PCPID).

ACTION: Notice of Quarterly Meeting.

DATES: November 19, 2008, from 8:30 a.m. to 5 p.m. EST; and November 20, 2008, from 8 a.m. to 9.a.m. The meeting will be open to the public.

ADDRESSES: The meeting will be held in Room 705A of the Hubert H. Humphrey Building, 200 Independence Ave., SW., Washington, DC 20201. Individuals who would like to participate via conference call may do so by dialing 888–603–6970, *passcode*: PCPID. Individuals who will need accommodations for a disability in order to attend the meeting (e.g., sign language interpreting services, assistive listening devices, materials in alternative formats such as large print or Braille) should notify MJ Karimi via e-mail at *Madjid.KarimieAsl@ACF.hhs.gov*, or via telephone at 202–619–0634, no later than November 12, 2008. PCPID will attempt to meet requests made after that date, but cannot guarantee availability. All meeting sites are barrier free.

Agenda: PCPID will meet to continue work on the 2009 Annual Report to the President.

Additional Information: For further information, please contact Sally D. Atwater, Executive Director, President's Committee for People with Intellectual Disabilities, The Aerospace Center, Second Floor West, 370 L'Enfant Promenade, SW., Washington, DC 20447. *Telephone:* 202–619–0634. *Fax:* 202–205–9591. *E-mail: satwater@acf.hhs.gov.*

SUPPLEMENTARY INFORMATION: PCPID acts in an advisory capacity to the President and the Secretary of Health and Human Services on a broad range of topics relating to programs, services and supports for persons with intellectual disabilities. PCPID, by Executive Order, is responsible for evaluating the adequacy of current practices in programs, services and supports for persons with intellectual disabilities, and for reviewing legislative proposals that impact the quality of life experienced by citizens with intellectual disabilities and their families.

Dated: October 8, 2008.

Sally D. Atwater,

Executive Director, President's Committee for People with Intellectual Disabilities.

[FR Doc. E8–24798 Filed 10–17–08; 8:45 am]

BILLING CODE 4184–01–P

DEPARTMENT OF HEALTH AND HUMAN SERVICES

Food and Drug Administration

[Docket No. FDA–2008–D–0530]

Draft Guidance for Industry on Tropical Disease Priority Review Vouchers; Availability

AGENCY: Food and Drug Administration, HHS.

ACTION: Notice.

SUMMARY: The Food and Drug Administration (FDA) is announcing the availability of a draft guidance for industry entitled ''Tropical Disease Priority Review Vouchers.'' There has been significant outside interest in FDA's interpretation of section 1102 of the Food and Drug Administration Amendments Act (FDAAA), which adds a new section 524 to the Federal Food, Drug, and Cosmetic Act (the act). Section 524 makes provisions for awarding priority review vouchers for future applications to sponsors of tropical disease product applications that meet the criteria specified by the act. This draft guidance explains to internal and external stakeholders how FDA intends to implement the provisions of section 524.

DATES: Although you can comment on any guidance at any time (see 21 CFR 10.115(g)(5)), to ensure that the agency considers your comment on this draft guidance before it begins work on the final version of the guidance, submit written or electronic comments on the draft guidance by December 19, 2008. Submit written comments on the proposed collection of information by December 19, 2008.

ADDRESSES: Submit written requests for single copies of the draft guidance to the Division of Drug Information, Center for Drug Evaluation and Research, Food and Drug Administration, 10903 New Hampshire Ave., Bldg. 51, rm. 2201, Silver Spring, MD 20993–0002, or the Office of Communication, Training, and Manufacturers Assistance (HFM–40), Center for Biologics Evaluation and Research (CBER), Food and Drug Administration, 1401 Rockville Pike, suite 200N, Rockville, MD 20852–1448. Send one self-addressed adhesive label to assist that office in processing your requests. The draft guidance may also be obtained by mail by calling CBER at 1–800–835–4709 or 301–827–1800. Submit written comments on the draft guidance to the Division of Dockets Management (HFA–305), Food and Drug Administration, 5630 Fishers Lane, rm. 1061, Rockville, MD 20852. Submit electronic comments to *http://www.regulations.gov*. See the **SUPPLEMENTARY INFORMATION** section for electronic access to the draft guidance document.

FOR FURTHER INFORMATION CONTACT:

David Roeder, Office of Antimicrobial Products, Center for Drug Evaluation and Research, Food and Drug Administration (WO–22), rm. 6410, 0903 New Hampshire Ave., Silver Spring, MD 20993–0002, 301–796–0799,or

Stephen Ripley, Center for Biologics Evaluation and Research (HFM–17), Food and Drug Administration, 1401 Rockville Pike, suite 200N, Rockville, MD 20852–1448, 301–827–6210.

SUPPLEMENTARY INFORMATION:

I. Background

FDA is announcing the availability of a draft guidance for industry entitled ''Tropical Disease Priority Review Vouchers.'' Section 1102 of FDAAA adds new section 524 to the act. Section 524 is designed to encourage development of new drug or biological products for prevention and treatment of certain tropical diseases affecting millions of people throughout the world. By enacting section 524, Congress intends to stimulate new drug development for drugs to treat certain tropical diseases for which there are no or few available treatments by offering additional incentives for obtaining FDA approval for pharmaceutical treatments for these diseases. Under section 524, a sponsor of a human drug application for a qualified tropical disease may be eligible for a voucher that can be used to obtain a priority review for any application submitted under section 505(b)(1) of the act or section 351 of the Public Health Service (PHS) Act. The draft guidance also provides information on using the priority review vouchers and on transferring priority review vouchers to other sponsors.

This draft guidance is being issued consistent with FDA's good guidance practices regulation (21 CFR 10.115). The draft guidance, when finalized, will represent the agency's current thinking on obtaining tropical disease priority review vouchers. It does not create or confer any rights for or on any person and does not operate to bind FDA or the public. An alternative approach may be used if such approach satisfies the requirements of the applicable statutes and regulations.

II. Paperwork Reduction Act of 1995

Under the Paperwork Reduction Act of 1995 (the PRA) (44 U.S.C. 3501–3520), Federal agencies must obtain approval from the Office of Management and Budget (OMB) for each collection of information that they conduct or sponsor. ''Collection of information'' is defined in 44 U.S.C. 3502(3) and 5 CFR 1320.3(c) and includes agency requests or requirements that members of the public submit reports, keep records, or provide information to a third party. Section 3506(c)(2)(A) of the PRA, 44 U.S.C. 3506(c)(2)(A), requires Federal agencies to provide a 60-day notice in the **Federal Register** for each proposed collection of information before submitting the collection to OMB for approval. To comply with this requirement, FDA is publishing this notice of the proposed collection of information set forth in this document.

With respect to the collection of information associated with this draft guidance, FDA invites comments on the following topics: (1) Whether the proposed information collected is necessary for the proper performance of FDA's functions, including whether the information will have practical utility; (2) the accuracy of FDA's estimated burden of the proposed information collected, including the validity of the methodology and assumptions used; (3) ways to enhance the quality, utility, and clarity of the information collected; and (4) ways to minimize the burden of information collected on the respondents, including through the use of automated collection techniques, when appropriate, and other forms of information technology.

Under the draft guidance, sponsors of certain tropical disease drug product applications submitted under section 505(b)(1) of the act and section 351 of the PHS Act may request a priority review voucher. Based on the inquiries FDA has received on section 524 and related discussions with sponsors, we estimate that we will receive annually approximately five requests from five sponsors, and that each request will take approximately 8 hours to prepare and submit to FDA.

The draft guidance also states that sponsors should notify FDA of their intent to use a priority review voucher, including the date on which the sponsor intends to submit the application, at least 1 year before use. We estimate that we will receive annually approximately five notifications of intent to use a voucher from five sponsors, and that

each notification will take approximately 8 hours to prepare and submit to FDA.

The draft guidance also permits the transfer of a priority review voucher from one sponsor to another, and states that each transfer should be documented with a letter of transfer. We estimate that we will receive approximately two letters indicating the transfer of a voucher from two application holders, and two letters from two new voucher owners acknowledging the transfer, and that it will take approximately 8 hours to prepare and submit each letter to FDA.

FDA estimates the burden of this collection of information as follows:

TABLE 1.—ESTIMATED ANNUAL REPORTING BURDEN[1]

Reporting Under Section 1102 of FDAAA	No. of Respondents	No. responses per Respondent	Total Responses	Hours Per Response	Total Hours
Priority review voucher request	5	1	5	8	40
Notifications of intent to use a voucher	5	1	5	8	40
Letters indicating the transfer of a voucher	2	1	2	8	16
Letters acknowledging the receipt of a transferred voucher.	2	1	2	8	16
Total					112

[1] There are no capital costs or operating and maintenance costs associated with this collection of information.

III. Comments

Interested persons may submit to the Division of Dockets Management (see **ADDRESSES**) written or electronic comments regarding this document. Submit a single copy of electronic comments or two paper copies of any mailed comments, except that individuals may submit one paper copy. Comments are to be identified with the docket number found in brackets in the heading of this document. Received comments may be seen in the Division of Dockets Management between 9 a.m. and 4 p.m., Monday through Friday.

Please note that on January 15, 2008, the FDA Division of Dockets Management Web site transitioned to the Federal Dockets Management System (FDMS). FDMS is a Government-wide, electronic docket management system. Electronic comments or submissions will be accepted by FDA only through FDMS at *http://www.regulations.gov*.

Dated: October 1, 2008.

Jeffrey Shuren,

Associate Commissioner for Policy and Planning.

[FR Doc. E8–24932 Filed 10–17–08; 8:45 am]

BILLING CODE 4160–01–S

DEPARTMENT OF HEALTH AND HUMAN SERVICES

National Institutes of Health

National Cancer Institute; Notice of Closed Meeting

Pursuant to section 10(d) of the Federal Advisory Committee Act, as amended (5 U.S.C. Appendix 2), notice is hereby given of a meeting of the Board of Scientific Counselors for Basic Sciences National Cancer Institute. The meeting will be closed to the public as indicated below in accordance with the provisions set forth in section 552b(c)(6), Title 5 U.S.C., as amended for the review, discussion, and evaluation of individual intramural programs and projects conducted by the National Cancer Institute, including consideration of personnel qualifications and performance, and the competence of individual investigators, the disclosure of which would constitute a clearly unwarranted invasion of personal privacy.

Name of Committee: Board of Scientific Counselors for Basic Sciences National Cancer Institute.

Date: November 18, 2008.

Time: 9 a.m. to 2:30 p.m.

Agenda: To review and evaluate personal qualifications and performance, and competence of individual investigators.

Place: National Institutes of Health, National Cancer Institute, 9000 Rockville Pike, Building 31, Conference Room 6, Bethesda, MD 20892.

Contact Person: Florence E. Farber, PhD, Executive Secretary, Office of the Director, National Cancer Institute, National Institutes of Health, 6116 Executive Boulevard, Room 2205, Bethesda, MD 20892, 301–496–7628, *ff6p@nih.gov.*

In the interest of security, NIH has instituted stringent procedures for entrance onto the NIH campus. All visitor vehicles, including taxicabs, hotel, and airport shuttles will be inspected before being allowed on campus. Visitors will be asked to show one form of identification (for example, a government-issued photo ID, driver's license, or passport) and to state the purpose of their visit.

Information is also available on the Institute's/Center's home page: *http://deainfo.nci.nih.gov/advisory/bsc/bs/bs.htm*, where an agenda and any additional information for the meeting will be posted when available.

(Catalogue of Federal Domestic Assistance Program Nos. 93.392, Cancer Construction; 93.393, Cancer Cause and Prevention Research; 93.394, Cancer Detection and Diagnosis Research; 93.395, Cancer Treatment Research; 93.396, Cancer Biology Research; 93.397, Cancer Centers Support; 93.398, Cancer Research Manpower; 93.399, Cancer Control, National Institutes of Health, HHS)

Dated: October 10, 2008.

Jennifer Spaeth,

Director, Office of Federal Advisory Committee Policy.

[FR Doc. E8–24830 Filed 10–17–08; 8:45 am]

BILLING CODE 4140–01–P

DEPARTMENT OF HEALTH AND HUMAN SERVICES

National Institutes of Health

National Cancer Institute; Notice of Meeting

Pursuant to section 10(d) of the Federal Advisory Committee Act, as amended (5 U.S.C. Appendix 2), notice is hereby given of the meeting of the President's Cancer Panel.

The meeting will be open to the public as indicated below, with attendance limited to space available. Individuals who plan to attend and need special assistance, such as sign language interpretation or other reasonable accommodations, should

notify the Contact Person listed below in advance of the meeting.

The meeting will be closed to the public in accordance with the provisions set forth in section 552b(c)(9)(B), Title 5 U.S.C., as amended, because the premature disclosure of these discussions would be likely to significantly frustrate implementation of recommendations.

Name of Committee: President's Cancer Panel.

Date: December 4, 2008.

Open: December 4, 2008, 8 a.m.–3 p.m.

Agenda: Environmental Factors in Cancer.

Place: Doubletree Guest Suites, 181 Church Street, Charleston, SC 29401.

Closed: December 4, 2008, 4 p.m.–7 p.m.

Agenda: Discussion of testimony given in open session on Environmental Factors in Cancer; consideration of thematic concepts for the 2009/2010 series.

Place: Doubletree Guest Suites, 181 Church Street, Charleston, SC 29401.

Contact Person: Abby Sandler, PhD, Executive Secretary, National Cancer Institute, National Institutes of Health, Building 6116, Room 220, MSC 8349, 6116 Executive Boulevard, Bethesda, MD 20892, 301/451–9399.

Any interested person may file written comments with the committee by forwarding the comments to the Contact Person listed on this notice. The comments should include the name, address, telephone number and, when applicable, the business or professional affiliation of the interested person.

Information is also available on the Institute's/Center's home page: *deainfo.nci.nih.gov/advisory/pcp/pcp.htm*, where an agenda and any additional information for the meeting will be posted when available.

(Catalogue of Federal Domestic Assistance Program Nos. 93.392, Cancer Construction; 93.393, Cancer Cause and Prevention Research; 93.394, Cancer Detection and Diagnosis Research; 93.395, Cancer Treatment Research; 93.396, Cancer Biology Research; 93.397, Cancer Centers Support; 93.398, Cancer Research Manpower; 93.399, Cancer Control, National Institutes of Health, HHS)

Dated: October 10, 2008.

Jennifer Spaeth,

Director, Office of Federal Advisory Committee Policy.

[FR Doc. E8–24832 Filed 10–17–08; 8:45 am]

BILLING CODE 4140–01–P

DEPARTMENT OF HEALTH AND HUMAN SERVICES

National Institutes of Health

National Cancer Institute; Notice of Closed Meeting

Pursuant to section 10(d) of the Federal Advisory Committee Act, as amended (5 U.S.C. Appendix 2), notice is hereby given of a meeting of the Board of Scientific Counselors for Clinical Sciences and Epidemiology National Cancer Institute.

The meeting will be closed to the public as indicated below in accordance with the provisions set forth in section 552b(c)(6), Title 5 U.S.C., as amended for the review, discussion, and evaluation of individual intramural programs and projects conducted by the National Cancer Institute, including consideration of personnel qualifications and performance, and the competence of individual investigators, the disclosure of which would constitute a clearly unwarranted invasion of personal privacy.

Name of Committee: Board of Scientific Counselors for Clinical Sciences and Epidemiology National Cancer Institute.

Date: November 17, 2008.

Time: 9 a.m. to 4 p.m.

Agenda: To review and evaluate personnel qualifications and performance, and competence of individual investigators.

Place: National Institutes of Health, National Cancer Institute, 9000 Rockville Pike, Building 31, Conference Room 10, Bethesda, MD 20892.

Contact Person: Brian E. Wojcik, PhD, Senior Review Administrator, Institute Review Office, Office of the Director, National Cancer Institute, 6116 Executive Boulevard, Room 2201, Bethesda, MD 20892, (301) 496–7628, *wojcikb@mail.nih.gov.*

In the interest of security, NIH has instituted stringent procedures for entrance onto the NIH campus. All visitor vehicles, including taxicabs, hotel, and airport shuttles will be inspected before being allowed on campus. Visitors will be asked to show one form of identification (for example, a government-issued photo ID, driver's license, or passport) and to state the purpose of their visit.

Information is also available on the Institute's/Center's home page: *deainfo.nci.nih.gov/advisory/bsc.htm*, where an agenda and any additional information for the meeting will be posted when available.

(Catalogue of Federal Domestic Assistance Program Nos. 93.392, Cancer Construction; 93.393, Cancer Cause and Prevention Research; 93.394, Cancer Detection and Diagnosis Research; 93.395, Cancer Treatment Research; 93.396, Cancer Biology Research; 93.397, Cancer Centers Support; 93.398, Cancer Research Manpower; 93.399, Cancer Control, National Institutes of Health, HHS)

Dated: October 10, 2008.

Jennifer Spaeth,

Director, Office of Federal Advisory Committee Policy.

[FR Doc. E8–24833 Filed 10–17–08; 8:45 am]

BILLING CODE 4140–01–P

DEPARTMENT OF HEALTH AND HUMAN SERVICES

National Institutes of Health

National Center for Complementary & Alternative Medicine; Notice of Closed Meeting

Pursuant to section 10(d) of the Federal Advisory Committee Act, as amended (5 U.S.C. Appendix 2), notice is hereby given of the following meeting.

The meeting will be closed to the public in accordance with the provisions set forth in sections 552b(c)(4) and 552b(c)(6), Title 5 U.S.C., as amended. The grant applications and the discussions could disclose confidential trade secrets or commercial property such as patentable material, and personal information concerning individuals associated with the grant applications, the disclosure of which would constitute a clearly unwarranted invasion of personal privacy.

Name of Committee: National Center for Complementary and Alternative Medicine Special Emphasis Panel, R21 Conflict Review.

Date: November 17, 2008.

Time: 11 a.m. to 2 p.m.

Agenda: To review and evaluate grant applications.

Place: National Institutes of Health, Democracy Two, 6707 Democracy Boulevard, Room 401, Bethesda, MD 20817. (Telephone conference call)

Contact Person: Laurie Friedman Donze, PhD, Scientific Review Officer, Office of Scientific Review, National Center for Complementary, and Alternative Medicine, NIH, 6707 Democracy Blvd., Suite 401, Bethesda, MD 20892, 301–402–1030, *donzel@mail.nih.gov.*

Dated: October 10, 2008.

Jennifer Spaeth,

Director, Office of Federal Advisory Committee Policy.

[FR Doc. E8–24829 Filed 10–17–08; 8:45 am]

BILLING CODE 4140–01–P

DEPARTMENT OF HEALTH AND HUMAN SERVICES

National Institutes of Health

National Eye Institute; Notice of Closed Meetings

Pursuant to section 10(d) of the Federal Advisory Committee Act, as amended (5 U.S.C. Appendix 2), notice is hereby given of the following meetings.

The meetings will be closed to the public in accordance with the provisions set forth in sections 552b(c)(4) and 552b(c)(6), Title 5 U.S.C.,

as amended. The grant applications and the discussions could disclose confidential trade secrets or commercial property such as patentable material, and personal information concerning individuals associated with the grant applications, the disclosure of which would constitute a clearly unwarranted invasion of personal privacy.

Name of Committee: National Eye Institute Special Emphasis Panel; NEI Cooperative Agreement Applications.

Date: November 5, 2008.

Time: 12:30 p.m. to 1:30 p.m.

Agenda: To review and evaluate cooperative agreement applications.

Place: National Institutes of Health, 5635 Fishers Lane, Bethesda, MD 20892, (Telephone Conference Call).

Contact Person: Anne E Schaffner, PhD, Scientific Review Officer, Division Of Extramural Research, National Eye Institute, 5635 Fishers Lane, Suite 1300, MSC 9300, Bethesda, MD 20892–9300, (301) 451–2020, *aes@nei.nih.gov.*

Name of Committee: National Eye Institute Special Emphasis Panel; NEI Clinical, Epidemiological and Genetics Grant Applications.

Date: November 17, 2008.

Time: 8:30 a.m. to 3 p.m.

Agenda: To review and evaluate grant applications.

Place: Embassy Suites at the Chevy Chase Pavilion, 4300 Military Road, NW., Washington, DC 20015.

Contact Person: Anne E Schaffner, PhD, Scientific Review Officer, Division of Extramural Research, National Eye Institute, 5635 Fishers Lane, Suite 1300, MSC 9300, Bethesda, MD 20892–9300, (301) 451–2020, *aes@nei.nih.gov.*

(Catalogue of Federal Domestic Assistance Program Nos. 93.867, Vision Research, National Institutes of Health, HHS)

Dated: October 3, 2008.

Jennifer Spaeth,

Director, Office of Federal Advisory Committee Policy.

[FR Doc. E8–24055 Filed 10–17–08; 8:45 am]

BILLING CODE 4140–01–P

DEPARTMENT OF HEALTH AND HUMAN SERVICES

National Institutes of Health

National Institute of Neurological Disorders and Stroke; Notice of Closed Meetings

Pursuant to section 10(d) of the Federal Advisory Committee Act, as amended (5 U.S.C. Appendix 2), notice is hereby given of the following meetings.

The meetings will be closed to the public in accordance with the provisions set forth in sections 552b(c)(4) and 552b(c)(6), Title 5 U.S.C., as amended. The grant applications and the discussions could disclose confidential trade secrets or commercial property such as patentable material, and personal information concerning individuals associated with the grant applications, the disclosure of which would constitute a clearly unwarranted invasion of personal privacy.

Name of Committee: National Institute of Neurological Disorders and Stroke Special Emphasis Panel Continuation CT Review.

Date: October 24, 2008.

Time: 1 p.m. to 2:30 p.m.

Agenda: To review and evaluate grant applications.

Place: Gaithersburg Marriott Washingtonian Center, 9751 Washingtonian Boulevard, Gaithersburg, MD 20878.

Contact Person: Shanta Rajaram, PhD, Scientific Review Administrator, Scientific Review Branch, Division of Extramural Research, NINDS/NIH/DHHS/Neuroscience Center, 6001 Executive Blvd., Suite 3208, MSC9529, Bethesda, MD 20852, (301) 435–6033, *rajarams@mail.nih.gov.*

This notice is being published less than 15 days prior to the meeting due to the timing limitations imposed by the review and funding cycle.

Name of Committee: National Institute of Neurological Disorders and Stroke Special Emphasis Panel CT SEP.

Date: October 24, 2008.

Time: 2:30 p.m. to 4 p.m.

Agenda: To review and evaluate grant applications.

Place: Gaithersburg Marriott Washingtonian Center, 9751 Washingtonian Boulevard, Gaithersburg, MD 20878.

Contact Person: Shanta Rajaram, PhD, Scientific Review Administrator, Scientific Review Branch, Division of Extramural Research, NINDS/NIH/DHHS/Neuroscience Center, 6001 Executive Blvd., Suite 3208, MSC9529, Bethesda, MD 20852, (301) 435–6033, *rajarams@mail.nih.gov.*

This notice is being published less than 15 days prior to the meeting due to the timing limitations imposed by the review and funding cycle.

Name of Committee: National Institute of Neurological Disorders and Stroke Special Emphasis Panel, Cerebral Hemorrhage.

Date: October 30, 2008.

Time: 5 p.m. to 7 p.m.

Agenda: To review and evaluate grant applications.

Place: National Institutes of Health, Neuroscience Center, 6001 Executive Boulevard, Rockville, MD 20852. (Telephone conference call)

Contact Person: Richard D. Crosland, PhD, Scientific Review Administrator, Scientific Review Branch, Division of Extramural Research, NINDS/NIH/DHHS/ Neuroscience Center, 6001 Executive Blvd., Suite 3208, MSC9529, Bethesda, MD 20892–9529, 301–594–0635, *rc218u@nih.gov.*

This notice is being published less than 15 days prior to the meeting due to the timing limitations imposed by the review and funding cycle.

(Catalogue of Federal Domestic Assistance Program Nos. 93.853, Clinical Research Related to Neurological Disorders; 93.854, Biological Basis Research in the Neurosciences, National Institutes of Health, HHS)

Dated: *October 9, 2008.*

Jennifer Spaeth,

Director, Office of Federal Advisory Committee Policy.

[FR Doc. E8–24796 Filed 10–17–08; 8:45 am]

BILLING CODE 4140–01–P

DEPARTMENT OF HOMELAND SECURITY

Federal Emergency Management Agency

Compendium of Flood Map Changes

AGENCY: Federal Emergency Management Agency, DHS.

ACTION: Notice of availability.

SUMMARY: The Federal Emergency Management Agency (FEMA) announces the availability of the Compendium of Flood Map Changes, which provides a listing of changes made to the National Flood Insurance Program (NFIP) maps that went into effect from January 1, 2008, through June 30, 2008. Future notices of NFIP map changes will be made available approximately every 6 months.

DATES: The listings include changes to NFIP maps that went into effect from January 1, 2008, through June 30, 2008.

ADDRESSES: The Compendium of Flood Map Changes is available on the Internet at *http://www.fema.gov/plan/prevent/fhm/dl_comp.shtm.*

FOR FURTHER INFORMATION CONTACT: William R. Blanton, Jr., Chief, Engineering Management Branch, Mitigation Directorate, Federal Emergency Management Agency, 500 C Street, SW., Washington, DC 20472, (202) 646–3151.

SUPPLEMENTARY INFORMATION: In accordance with section 1360(i) of the National Flood Insurance Reform Act of 1994, 42 U.S.C. 4101(i), this notice is provided to inform interested parties of the availability of changes made by FEMA to NFIP maps. In the Compendium of Flood Map Changes, the two listings show communities affected by map changes made by letter and communities affected by physical map changes. For each Letter of Map Change, the first listing provides the map panel(s) affected, effective (determination) date of the change, case number, and determination type. For each physical map change, the Map Revision listing provides the map panel(s) affected and the effective date

of the change. The listing also identifies: (1) Those panels on which the Special Flood Hazard Areas have not been changed or have been changed only to incorporate the Letters of Map Change issued before the effective date; and (2) those panels for which a Flood Insurance Rate Map is produced for the first time, resulting only in changes to flood insurance and floodplain management requirements in the affected community. Future notices of changes to NFIP maps will be made available approximately every 6 months.

The Compendium of Flood Map Changes is available on the Internet at *http://www.fema.gov/plan/prevent/fhm/dl_comp.shtm*. The compendia shall be available, free of charge, to Federal entities for lending regulation, Federal agency lenders, and States and communities participating in the National Flood Insurance Program, and at a cost to all other parties. For more information, contact the FEMA Map Service Center at (800) 358–9616 or go to *http://www.msc.fema.gov*.

Authority: 42 U.S.C. 4101(i).

Dated: September 17, 2008.

Michael K. Buckley,

Acting Assistant Administrator, Mitigation Directorate, Department of Homeland Security, Federal Emergency Management Agency.

[FR Doc. E8–24794 Filed 10–17–08; 8:45 am]

BILLING CODE 9110–12–P

DEPARTMENT OF HOMELAND SECURITY

Federal Emergency Management Agency

[FEMA–1800–DR]

Illinois; Major Disaster and Related Determinations

AGENCY: Federal Emergency Management Agency, DHS.

ACTION: Notice.

SUMMARY: This is a notice of the Presidential declaration of a major disaster for the State of Illinois (FEMA–1800–DR), dated October 3, 2008, and related determinations.

DATES: *Effective Date:* October 3, 2008.

FOR FURTHER INFORMATION CONTACT: Peggy Miller, Disaster Assistance Directorate, Federal Emergency Management Agency, 500 C Street, SW., Washington, DC 20472, (202) 646–3886.

SUPPLEMENTARY INFORMATION: Notice is hereby given that, in a letter dated October 3, 2008, the President declared a major disaster under the authority of the Robert T. Stafford Disaster Relief and Emergency Assistance Act, 42 U.S.C. 5121–5207 (the Stafford Act), as follows:

I have determined that the damage in certain areas of the State of Illinois resulting from severe storms and flooding beginning on September 13, 2008, and continuing, is of sufficient severity and magnitude to warrant a major disaster declaration under the Robert T. Stafford Disaster Relief and Emergency Assistance Act, 42 U.S.C. 5121–5207 (the Stafford Act). Therefore, I declare that such a major disaster exists in the State of Illinois.

In order to provide Federal assistance, you are hereby authorized to allocate from funds available for these purposes such amounts as you find necessary for Federal disaster assistance and administrative expenses.

You are authorized to provide Individual Assistance in the designated areas, Hazard Mitigation throughout the State, and any other forms of assistance under the Stafford Act that you deem appropriate. Consistent with the requirement that Federal assistance be supplemental, any Federal funds provided under the Stafford Act for Hazard Mitigation and Other Needs Assistance will be limited to 75 percent of the total eligible costs. If Public Assistance is later requested and warranted, Federal funds provided under that program also will be limited to 75 percent of the total eligible costs, except for any particular projects that are eligible for a higher Federal cost-sharing percentage under the FEMA Public Assistance Pilot Program instituted pursuant to 6 U.S.C. 777.

Further, you are authorized to make changes to this declaration to the extent allowable under the Stafford Act.

The time period prescribed for the implementation of section 310(a), Priority to Certain Applications for Public Facility and Public Housing Assistance, 42 U.S.C. 5153, shall be for a period not to exceed six months after the date of this declaration.

The Federal Emergency Management Agency (FEMA) hereby gives notice that pursuant to the authority vested in the Administrator, under Executive Order 12148, as amended, Elizabeth Turner, of FEMA is appointed to act as the Federal Coordinating Officer for this declared disaster.

The following areas of the State of Illinois have been designated as adversely affected by this declared major disaster:

Cook, DeKalb, DuPage, Grundy, Kane, LaSalle, and Will Counties for Individual Assistance.

All counties within the State of Illinois are eligible to apply for assistance under the Hazard Mitigation Grant Program.

(The following Catalog of Federal Domestic Assistance Numbers (CFDA) are to be used for reporting and drawing funds: 97.030, Community Disaster Loans; 97.031, Cora Brown Fund; 97.032, Crisis Counseling; 97.033, Disaster Legal Services; 97.034, Disaster Unemployment Assistance (DUA); 97.046, Fire Management Assistance Grant; 97.048, Disaster Housing Assistance to Individuals and Households in Presidentially Declared Disaster Areas; 97.049, Presidentially Declared Disaster Assistance—Disaster Housing Operations for Individuals and Households; 97.050, Presidentially Declared Disaster Assistance to Individuals and Households—Other Needs; 97.036, Disaster Grants—Public Assistance (Presidentially Declared Disasters); 97.039, Hazard Mitigation Grant.)

R. David Paulison,

Administrator, Federal Emergency Management Agency.

[FR Doc. E8–24790 Filed 10–17–08; 8:45 am]

BILLING CODE 9111–23–P

DEPARTMENT OF HOMELAND SECURITY

Federal Emergency Management Agency

[FEMA–1795–DR]

Indiana; Amendment No. 3 to Notice of a Major Disaster Declaration

AGENCY: Federal Emergency Management Agency, DHS.

ACTION: Notice.

SUMMARY: This notice amends the notice of a major disaster declaration for the State of Indiana (FEMA–1795–DR), dated September 23, 2008, and related determinations.

DATES: *Effective Date:* October 6, 2008.

FOR FURTHER INFORMATION CONTACT: Peggy Miller, Disaster Assistance Directorate, Federal Emergency Management Agency, 500 C Street, SW., Washington, DC 20472, (202) 646–3886.

SUPPLEMENTARY INFORMATION: Notice is hereby given that the incident period for this disaster is closed effective October 6, 2008.

(The following Catalog of Federal Domestic Assistance Numbers (CFDA) are to be used for reporting and drawing funds: 97.030, Community Disaster Loans; 97.031, Cora Brown Fund; 97.032, Crisis Counseling; 97.033, Disaster Legal Services; 97.034, Disaster Unemployment Assistance (DUA); 97.046, Fire Management Assistance Grant; 97.048, Disaster Housing Assistance to Individuals and Households In Presidentially Declared Disaster Areas; 97.049, Presidentially Declared Disaster Assistance—Disaster Housing Operations for Individuals and Households; 97.050, Presidentially Declared Disaster Assistance to Individuals and Households—Other Needs; 97.036, Disaster Grants—Public Assistance

(Presidentially Declared Disasters); 97.039, Hazard Mitigation Grant.

R. David Paulison,

Administrator, Federal Emergency Management Agency.

[FR Doc. E8–24789 Filed 10–17–08; 8:45 am]

BILLING CODE 9111–23–P

DEPARTMENT OF HOMELAND SECURITY

Federal Emergency Management Agency

[FEMA–1799–DR]

New Hampshire; Major Disaster and Related Determinations

AGENCY: Federal Emergency Management Agency, DHS.

ACTION: Notice.

SUMMARY: This is a notice of the Presidential declaration of a major disaster for the State of New Hampshire (FEMA–1799–DR), dated October 3, 2008, and related determinations.

DATES: *Effective Date:* October 3, 2008.

FOR FURTHER INFORMATION CONTACT: Peggy Miller, Disaster Assistance Directorate, Federal Emergency Management Agency, 500 C Street, SW., Washington, DC 20472, (202) 646–3886.

SUPPLEMENTARY INFORMATION: Notice is hereby given that, in a letter dated October 3, 2008, the President declared a major disaster under the authority of the Robert T. Stafford Disaster Relief and Emergency Assistance Act, 42 U.S.C. 5121–5207 (the Stafford Act), as follows:

I have determined that the damage in certain areas of the State of New Hampshire resulting from severe storms and flooding during the period of September 6–7, 2008, is of sufficient severity and magnitude to warrant a major disaster declaration under the Robert T. Stafford Disaster Relief and Emergency Assistance Act, 42 U.S.C. 5121–5207 (the Stafford Act). Therefore, I declare that such a major disaster exists in the State of New Hampshire.

In order to provide Federal assistance, you are hereby authorized to allocate from funds available for these purposes such amounts as you find necessary for Federal disaster assistance and administrative expenses.

You are authorized to provide Public Assistance in the designated areas, Hazard Mitigation throughout the State, and any other forms of assistance under the Stafford Act that you deem appropriate. Consistent with the requirement that Federal assistance be supplemental, any Federal funds provided under the Stafford Act for Hazard Mitigation will be limited to 75 percent of the total eligible costs. Federal funds provided under the Stafford Act for Public Assistance also will be limited to 75 percent of the total eligible costs, except for any particular projects that are eligible for a higher Federal cost-sharing percentage under the FEMA Public Assistance Pilot Program instituted pursuant to 6 U.S.C. 777. If Other Needs Assistance under Section 408 of the Stafford Act is later requested and warranted, Federal funding under that program also will be limited to 75 percent of the total eligible costs.

Further, you are authorized to make changes to this declaration to the extent allowable under the Stafford Act.

The Federal Emergency Management Agency (FEMA) hereby gives notice that pursuant to the authority vested in the Administrator, under Executive Order 12148, as amended, Mark H. Landry, of FEMA is appointed to act as the Federal Coordinating Officer for this declared disaster.

The following areas of the State of New Hampshire have been designated as adversely affected by this declared major disaster:

Hillsborough County for Public Assistance.

All counties within the State of New Hampshire are eligible to apply for assistance under the Hazard Mitigation Grant Program.

(The following Catalog of Federal Domestic Assistance Numbers (CFDA) are to be used for reporting and drawing funds: 97.030, Community Disaster Loans; 97.031, Cora Brown Fund; 97.032, Crisis Counseling; 97.033, Disaster Legal Services; 97.034, Disaster Unemployment Assistance (DUA); 97.046, Fire Management Assistance Grant; 97.048, Disaster Housing Assistance to Individuals and Households in Presidentially Declared Disaster Areas; 97.049, Presidentially Declared Disaster Assistance—Disaster Housing Operations for Individuals and Households; 97.050, Presidentially Declared Disaster Assistance to Individuals and Households—Other Needs; 97.036, Disaster Grants—Public Assistance (Presidentially Declared Disasters); 97.039, Hazard Mitigation Grant.)

R. David Paulison,

Administrator, Federal Emergency Management Agency.

[FR Doc. E8–24791 Filed 10–17–08; 8:45 am]

BILLING CODE 9111–23–P

DEPARTMENT OF HOMELAND SECURITY

Federal Emergency Management Agency

[FEMA–1798–DR]

Puerto Rico; Amendment No. 1 to Notice of a Major Disaster Declaration

AGENCY: Federal Emergency Management Agency, DHS.

ACTION: Notice.

SUMMARY: This notice amends the notice of a major disaster declaration for the Commonwealth of Puerto Rico (FEMA–1798–DR), dated October 1, 2008, and related determinations.

DATES: *Effective Date:* October 3, 2008.

FOR FURTHER INFORMATION CONTACT: Peggy Miller, Disaster Assistance Directorate, Federal Emergency Management Agency, 500 C Street, SW., Washington, DC 20472, (202) 646–3886.

SUPPLEMENTARY INFORMATION: Notice is hereby given that the incident period for this disaster is closed effective October 3, 2008.

(The following Catalog of Federal Domestic Assistance Numbers (CFDA) are to be used for reporting and drawing funds: 97.030, Community Disaster Loans; 97.031, Cora Brown Fund; 97.032, Crisis Counseling; 97.033, Disaster Legal Services; 97.034, Disaster Unemployment Assistance (DUA); 97.046, Fire Management Assistance Grant; 97.048, Disaster Housing Assistance to Individuals and Households In Presidentially Declared Disaster Areas; 97.049, Presidentially Declared Disaster Assistance—Disaster Housing Operations for Individuals and Households; 97.050, Presidentially Declared Disaster Assistance to Individuals and Households—Other Needs; 97.036, Disaster Grants—Public Assistance (Presidentially Declared Disasters); 97.039, Hazard Mitigation Grant.)

R. David Paulison,

Administrator, Federal Emergency Management Agency.

[FR Doc. E8–24792 Filed 10–17–08; 8:45 am]

BILLING CODE 9111–23–P

DEPARTMENT OF HOMELAND SECURITY

Federal Emergency Management Agency

[FEMA–1798–DR]

Puerto Rico; Amendment No. 2 to Notice of a Major Disaster Declaration

AGENCY: Federal Emergency Management Agency, DHS.

ACTION: Notice.

SUMMARY: This notice amends the notice of a major disaster declaration for the Commonwealth of Puerto Rico (FEMA–1798–DR), dated October 1, 2008, and related determinations.

DATES: *Effective Date:* October 8, 2008.

FOR FURTHER INFORMATION CONTACT: Peggy Miller, Disaster Assistance Directorate, Federal Emergency Management Agency, 500 C Street, SW., Washington, DC 20472, (202) 646–3886.

SUPPLEMENTARY INFORMATION: The notice of a major disaster declaration for the Commonwealth of Puerto Rico is hereby amended to include the following areas among those areas determined to have

been adversely affected by the catastrophe declared a major disaster by the President in his declaration of October 1, 2008.

Arroyo, Cabo Rojo, Guanica, Guayanilla, Gurabo, Juncos, Lajas, Peñuelas, San Lorenzo, Villalba, and Yauco Municipalities for Individual Assistance and Public Assistance.

Guayama, Humacao, Maunabo, Patillas, Santa Isabel, and Yabucoa Municipalities for Public Assistance (already designated for Individual Assistance).

Adjuntas, Las Marias, Las Piedras, Naguabo, Sabana Grande, San German, and Utuado Municipalities for Public Assistance.

(The following Catalog of Federal Domestic Assistance Numbers (CFDA) are to be used for reporting and drawing funds: 97.030, Community Disaster Loans; 97.031, Cora Brown Fund; 97.032, Crisis Counseling; 97.033, Disaster Legal Services; 97.034, Disaster Unemployment Assistance (DUA); 97.046, Fire Management Assistance Grant; 97.048, Disaster Housing Assistance to Individuals and Households in Presidentially Declared Disaster Areas; 97.049, Presidentially Declared Disaster Assistance—Disaster Housing Operations for Individuals and Households; 97.050 Presidentially Declared Disaster Assistance to Individuals and Households—Other Needs; 97.036, Disaster Grants—Public Assistance (Presidentially Declared Disasters); 97.039, Hazard Mitigation Grant.)

R. David Paulison,

Administrator, Federal Emergency Management Agency.

[FR Doc. E8–24793 Filed 10–17–08; 8:45 am]

BILLING CODE 9111–23–P

DEPARTMENT OF HOMELAND SECURITY

Transportation Security Administration

[Docket No. TSA–2005–21866]

Intent To Request Renewal From OMB of One Current Public Collection of Information: Enhanced Security Procedures at Ronald Reagan Washington National Airport

AGENCY: Transportation Security Administration (TSA), DHS.

ACTION: 60 Day Notice.

SUMMARY: The Transportation Security Administration (TSA) invites public comment on one currently approved Information Collection Request (ICR), OMB control number 1652–0035, abstracted below that we will submit to the Office of Management and Budget (OMB) for renewal in compliance with the Paperwork Reduction Act. The ICR describes the nature of the information collection and its expected burden. The collection requires General Aviation (GA) aircraft operators who wish to fly into and/or out of Ronald Reagan Washington National Airport (DCA) to designate a security coordinator and adopt a DCA Access Standard Security Program (DASSP).

DATES: Send your comments by December 19, 2008.

ADDRESSES: Comments may be mailed or delivered to Joanna Johnson, Office of Information Technology, TSA–11, Transportation Security Administration, 601 South 12th Street, Arlington, VA 22202–4220.

FOR FURTHER INFORMATION CONTACT: Joanna Johnson at the above address, or by telephone (571) 227–3651 or facsimile (703) 603–0822.

SUPPLEMENTARY INFORMATION:

Comments Invited

In accordance with the Paperwork Reduction Act of 1995, (44 U.S.C. 3501 *et seq.*), an agency may not conduct or sponsor, and a person is not required to respond to a collection of information, unless it displays a valid OMB control number. Therefore, in preparation for OMB review and approval of the following information collection, TSA is soliciting comments to—

(1) Evaluate whether the proposed information requirement is necessary for the proper performance of the functions of the agency, including whether the information will have practical utility;

(2) Evaluate the accuracy of the agency's estimate of the burden;

(3) Enhance the quality, utility, and clarity of the information to be collected; and

(4) Minimize the burden of the collection of information on those who are to respond, including using appropriate automated, electronic, mechanical, or other technological collection techniques or other forms of information technology.

Information Collection Requirement

OMB Control No. 1652–0035; Enhanced Security Procedures at Ronald Reagan Washington National Airport (DCA), 49 CFR part 1562. TSA is hereby requesting an extension of this information collection.

TSA requires General Aviation (GA) aircraft operators who wish to fly into and/or out of Ronald Reagan Washington National Airport (DCA) to designate a security coordinator and adopt the DCA Access Standard Security Program (DASSP). Once aircraft operators have complied with the DASSP requirements, they may be eligible to apply to the Federal Aviation Administration (FAA) for a reservation, and to TSA for authorization, to fly into and out of DCA.

To receive authorization for a flight, aircraft operators must submit certain information to TSA so that TSA can conduct name-based threat assessments on their crewmembers and passengers, including armed security officers (ASOs) who are required to be onboard. Each ASO must complete specialized training and receive authorization from TSA. The operators' last point of departure must be from a Fixed Base Operator (FBO) that holds a security program issued by TSA, at an airport designated by TSA (gateway airport). An FBO is an airport-based commercial enterprise that provides support services to aircraft operators. Inspection of aircraft and screening of the passengers, their carry-on property, and property carried in the cargo hold occur at each gateway airport before the aircraft departs for DCA.

For each passenger and crewmember onboard an aircraft that operates into or out of DCA, the aircraft operator must submit the following information: (1) Legal name, including first, middle, and last, any applicable suffix, and any other names used; (2) current mailing address, including residential address if different than current mailing address; (3) date and place of birth; (4) Social Security number (submission is voluntary, although recommended); (5) citizenship status and date of naturalization if the individual is a naturalized citizen of the United States; and (6) alien registration number, if applicable. TSA uses this information to perform a name-based security threat assessment in order to determine whether the individuals pose a security threat.

TSA requires the following individuals to submit identifying information and fingerprints for a Criminal History Records Check (CHRC): Individuals designated as security coordinators, ASOs, and flight crewmembers that operate GA aircraft into and out of DCA. For flight crewmembers, TSA uses this information to check their FAA records to determine whether they have violated specific regulations on prohibited or restricted airspace, and to conduct CHRCs on flight crewmembers that have not undergone a CHRC under his or her current employer. As part of the threat assessment process, TSA shares the information with the Federal Bureau of Investigation (FBI) and the FAA. In addition to providing fingerprints and identifying information, ASOs must provide personal history information (employment, criminal, education, training, military, medical, and law enforcement), as well as a photograph and weapon information.

Aircraft operators must provide TSA with the flight plan and registration number of their aircraft that operates to or from DCA. This information is also being shared with FAA for purposes of tracking and identifying approved aircraft. TSA estimates a total of 200 respondents annually. The total number of annual burden hours is estimated to be 227 hours per year (200 respondents × 1.135 hours per respondent = 227 hours annually).

Issued in Arlington, Virginia, on October 15, 2008.

Kurt Guyer,

Acting Program Manager, Business Improvements and Communications, Office of Information Technology.

[FR Doc. E8–24929 Filed 10–17–08; 8:45 am]

BILLING CODE 4910–62–P

DEPARTMENT OF THE INTERIOR

Fish and Wildlife Service

[FWS–R4–R–2008–N0218; 40136–1265–0000–S3]

Lake Woodruff National Wildlife Refuge, Lake and Volusia Counties, FL

AGENCY: Fish and Wildlife Service, Department of the Interior.

ACTION: Notice of availability: Final comprehensive conservation plan and finding of no significant impact.

SUMMARY: We, the U.S. Fish and Wildlife Service (Service), announce the availability of our final comprehensive conservation plan (CCP) and finding of no significant impact (FONSI) for Lake Woodruff National Wildlife Refuge (NWR). In the CCP, we describe how we will manage Lake Woodruff NWR for the next 15 years.

ADDRESSES: A copy of the final CCP may be obtained by visiting the refuge at 2045 Mud Lake Road, DeLeon Springs, FL 32130; by e-mailing *LakeWoodruffCCP@fws.gov*; by calling the Refuge Complex at 321/861–0667; or by writing the Refuge Complex at Lake Woodruff NWR (CCP), P.O. Box 2683, Titusville, FL 32781–2683. The CCP may also be accessed and downloaded from the Service's Internet Site: *http://southeast.fws.gov/planning.*

FOR FURTHER INFORMATION CONTACT: Cheri Ehrhardt; Telephone: 321/861–2368.

SUPPLEMENTARY INFORMATION:

Introduction

With this notice, we finalize the CCP process for Lake Woodruff NWR. We started this process through a notice of intent in the **Federal Register** on July 26, 2006 (71 FR 42412). For more about the process, see that notice.

Established in 1964, Lake Woodruff NWR is located approximately 28 miles west of Daytona Beach, Florida, in Lake and Volusia counties. The 21,574-acre refuge includes a diversity of habitats consisting of open water, freshwater marshes, impounded wetlands, and uplands. These areas support a variety of wildlife and plant species, including waterfowl and other migratory birds, as well as federal- and state-listed species. In addition, the refuge protects historical and archaeological sites and provides a range of visitor services.

We announce our decision and the availability of the final CCP and FONSI for Lake Woodruff NWR in accordance with National Environmental Policy Act (NEPA) [40 CFR 1506.6(b)] requirements. We completed a thorough analysis of impacts on the human environment, which we included in the Draft CCP and Environmental Assessment (Draft CCP/EA).

Background

The National Wildlife Refuge System Improvement Act of 1997 (16 U.S.C. 668dd–668ee) (Improvement Act), which amended the National Wildlife Refuge System Administration Act of 1966, requires us to develop a CCP for each national wildlife refuge. The purpose for developing a CCP is to provide refuge managers with a 15-year plan for achieving refuge purposes and contributing toward the mission of the National Wildlife Refuge System, consistent with sound principles of fish and wildlife management, conservation, legal mandates, and our policies. In addition to outlining broad management direction on conserving wildlife and their habitats, CCPs identify wildlife-dependent recreational opportunities available to the public, including opportunities for hunting, fishing, wildlife observation, wildlife photography, and environmental education and interpretation. We will review and update the CCP at least every 15 years in accordance with the Improvement Act.

Comments

We solicited comments on the Draft CCP/EA for a 30-day period as announced in the **Federal Register** on April 23, 2008 (73 FR 21978). All comments were thoroughly evaluated, and changes were incorporated into the final CCP, where warranted.

Selected Alternative

After considering the comments we received, we have selected Alternative D for implementation. Under this alternative, refuge management will focus on maintaining native wildlife and habitat diversity, restoring habitats, improving conditions for threatened and endangered species and migratory birds, and increasing public use opportunities.

(Authority: This notice is published under the authority of the National Wildlife Refuge System Improvement Act of 1997, Public Law 105–57.)

Dated: August 27, 2008.

Cynthia K. Dohner,

Acting Regional Director.

[FR Doc. E8–24885 Filed 10–17–08; 8:45 am]

BILLING CODE 4310–55–P

DEPARTMENT OF THE INTERIOR

Fish and Wildlife Service

[FWS–R6–R–2008–N0268; 61411–0000–1115–F4]

Proposed Candidate Conservation Agreement With Assurances for the Black-Tailed Prairie Dog, Mountain Plover, Burrowing Owl, and Ferruginous Hawk for the 4W Ranch in Niobrara and Weston Counties, WY

AGENCY: Fish and Wildlife Service, Interior.

ACTION: Notice of availability; receipt of application.

SUMMARY: This notice advises the public that the 4W Ranch, FLP (Applicant) has applied to the U.S. Fish and Wildlife Service (Service) for an enhancement of survival permit (permit) pursuant to section 10(a)(1)(A) of the Endangered Species Act of 1973, as amended (Act). This permit application includes a Candidate Conservation Agreement with Assurances (Agreement) between the Applicant and the Service. The Service requests information, views, and opinions from the public via this notice. Further, the Service is soliciting information regarding the adequacy of the Agreement as measured against the Service's Candidate Conservation Agreement with Assurances policy and the regulations that implement it.

DATES: Written comments on the permit application must be received on or before November 19, 2008.

ADDRESSES: Persons wishing to review the Agreement and permit application may obtain copies by writing to the Wyoming Ecological Services Field Office, U.S. Fish and Wildlife Service, 5353 Yellowstone Road, Suite 308A, Cheyenne, Wyoming 82001. Documents also will be available for public inspection during normal business hours at this office. Documents also may be viewed on the following Web site:

http://www.fws.gov/mountain-prairie/es/wyoming/index.htm. Written data or comments concerning the Agreement or permit application should be addressed to Brian T. Kelly, Field Supervisor, at the above address, to be adequately considered in the Service's decision-making process. Written comments also may be sent by facsimile to (307) 772–2358. Please reference permit number TE184530 in your comments, or in the request of the documents discussed herein.

FOR FURTHER INFORMATION CONTACT: Brian T. Kelly, Field Supervisor, Wyoming Ecological Services Field Office, at the above address; telephone (307) 772–2374. People who use a telecommunications device for the deaf (TDD) may call the Federal Information Relay Service at (800) 877–8339.

SUPPLEMENTARY INFORMATION:

Background

Under a Candidate Conservation Agreement with Assurances, participating landowners voluntarily undertake management activities on their property to enhance, restore, or maintain habitat benefiting species that are proposed for listing under the Act, candidates for listing, or may become candidates. Candidate Conservation Agreements with Assurances, and the subsequent permits that are issued pursuant to section 10(a)(1)(A) of the Act (16 U.S.C. 1531 *et seq.*), encourage private and other non-Federal property owners to implement conservation efforts for species by assuring property owners that they will not be subjected to increased land use restrictions as a result of efforts to attract or increase the numbers or distribution of a listed species on their property, if that species becomes listed under the Act in the future. Application requirements and issuance criteria for permits through the Candidate Conservation Agreement with Assurances are found in 50 CFR 17.22(d) and 17.32(d).

We have worked with the Applicant to develop this proposed Agreement for the conservation of the black-tailed prairie dog (*Cynomys ludovicianus*), mountain plover (*Charadrius montanus*), burrowing owl (*Athene cunicularia*), and ferruginous hawk (*Buteo regalis*) (covered species) on the 4W Ranch, which lies in Niobrara and Weston Counties, Wyoming. Within the 29,000 acres of 4W Ranch owned or leased lands, the landowners have identified 3,370 acres of their privately owned property on which habitat for the covered species will be restored, enhanced, and managed pursuant to the Agreement. The proposed duration of the Agreement and permit is 10 years. The Agreement fully describes the proposed management activities to be undertaken by the Applicant and the conservation benefits expected to be gained for the covered species. We have made a preliminary determination that the Agreement qualifies as a low-effect plan, since it has minor to negligible effects on federally listed, proposed or candidate species and their habitats, and qualifies for a categorical exclusion under the National Environmental Policy Act (NEPA).

Upon approval of this Agreement, and consistent with the Service's Candidate Conservation Agreement with Assurances' policy published in the **Federal Register** on June 17, 1999 (64 FR 32726), the Service would issue a permit to the applicant authorizing take of the covered species by the Applicant associated with the implementation of the management activities specified in the Agreement. To benefit the covered species, the Applicant agrees to undertake site-specific management activities, which are specified in their Agreement.

The black-tailed prairie dog is considered a keystone species, because the effects of its foraging and burrowing behaviors maintain habitat features important to a variety of other species and it serves as a food source for predators. Prairie dog activities result in mixing subsoil with topsoil, which redistributes nutrients and increases water infiltration rates. The resulting soil and moisture conditions consequently increase plant diversity, which in turns attracts a variety of animals to prairie dog colonies. However, prairie dogs can also have significant adverse effects on vegetation communities in localized areas in and near their colonies. Prairie dogs can denude areas of vegetation under prolonged drought and heat conditions. As a result, prairie dogs have often been viewed by landowners as directly competing with livestock for forage resources.

The black-tailed prairie dog was eliminated from much of its historic range as a result of control efforts by both public and private landowners. Control efforts no longer appear to be significantly reducing the range-wide distribution of the species, but continued control efforts by some landowners can have localized effects to prairie dog populations. Due to the perceived conflict of prairie dogs with other land uses, landowners are more inclined to maintain or increase habitat as viable and productive for prairie dog, if doing so can be balanced with other land uses. Because most of the black-tailed prairie dog habitat in the eastern range occurs on private lands, private landowners willing to manage for suitable habitat can play an important role in the long-term conservation of the black-tailed prairie dog. Accordingly, the 4W Ranch agrees to undertake management activities to enhance habitat and protect the ranch's populations of black-tailed prairie dogs, mountain plovers, burrowing owls, and ferruginous hawks. However, the willingness for participation by the property owner depends on the ability to manage these species to allow maintenance of the ranch's economic viability and protection of high-value forage areas for livestock.

Management activities described in the Agreement provide for the restoration, enhancement, and management of native habitats of the covered species on 3,370 acres of the 4W Ranch. The objective of such activities is to enhance populations of the covered species by increasing the amount and quality of suitable habitat on the enrolled properties. Management of black-tailed prairie dogs, outlined in the Agreement, will focus on maintaining colonies within a 3,000-acre core management area. Conservation measures to be implemented by the 4W Ranch under the Agreement include control of prickly pear cactus, range soil aeration, reseeding grasses, and livestock grazing rotation. These measures also would benefit the other covered species, which depend on the prairie dog for suitable habitat and prey. The implementation of these measures, as well as some routine ranching activities, may result in the incidental take of the covered species. Such take would be authorized by the issuance to the property owner of a section 10(a)(1)(A) permit under the authority of 50 CFR 17.22(d) for species federally listed as endangered or 50 CFR 17.32 (d) for species federally listed as threatened.

An incentive for long-term conservation of the black-tailed prairie dog on the 4W Ranch is the assurance that the property owner will be able to maintain economic viability of the ranch by preventing encroachment of prairie dogs onto important ranch production areas (e.g., hay meadows). The property owner would be authorized to use primarily regulated recreational shooting and other measures as necessary to control prairie dogs when populations on the 4W Ranch are above established thresholds. Such regulated take would be authorized by the section 10(a)(1)(A) permit issued to the property owner under the authority of 50 CFR 17.22(a)

for species federally listed as endangered or 50 CFR 17.32 (a) for species federally listed as threatened.

A single section 10(a)(1)(A) permit would be issued with separate authorizations, as cited above, for the incidental take of the covered species and for the intentional take of the black-tailed prairie dog. The permit also would contain separate sets of special terms and conditions for each of the two types of take. The permit would become effective upon Federal listing of any of the covered species.

Annual monitoring, required by the Agreement, will be conducted to determine active burrow densities, which can be used as an index of population levels. Recreational shooting will not occur unless monitoring indicates the population threshold has been exceeded. For example, when plague epizootics have reduced the population below established thresholds, all recreational shooting will be suspended, pending the recovery of the population back to threshold levels. Additionally, ongoing monitoring and adaptive management will allow adjustment of management goals and thresholds should new information indicate populations are decreasing or increasing outside the threshold parameters.

Baseline population and habitat conditions for the covered species are described in the Agreement. Annual monitoring is a key component of the Agreement and is one of the requirements for receiving assurances that no further measures would be required of the property owner and that take of any of the covered species, if federally listed, under the permit would continue to be authorized. Adaptive management provides the plan flexibility, if monitoring indicates changes in management are necessary (e.g., threshold levels need to be raised to meet the conservation goals, as fully described in the Agreement).

Public Review and Comments

The Service has made a preliminary determination that the proposed Agreement and permit issuance are eligible for categorical exclusion under NEPA. We explain the basis for this determination in an Environmental Action Statement, which also is available for public review at the office listed in the **ADDRESSES** section above.

If you wish to comment on the permit application or the Agreement, you may submit your comments to the address listed in the **ADDRESSES** section of this document. Before including your address, phone number, e-mail address, or other personal identifying information in your comment, you should be aware that your entire comment—including your personal identifying information—may be made publicly available at any time. While you can ask us in your comment to withhold your personal identifying information from public review, we cannot guarantee that we will be able to do so.

We will evaluate this permit application, associated documents, and comments submitted thereon to determine whether the permit application meets the requirements of section 10(a) of the Act and NEPA regulations at 40 CFR 1506.6. If we determine that the requirements are met, we will sign the proposed Agreement and issue a permit under section 10(a)(1)(A) of the Act to the Applicants for take of the covered species in accordance with the terms of the Agreement. We will not make our final decision until after the end of the 30-day comment period and will fully consider all comments received during the comment period.

The Service provides this notice under section 10(c) of the Act and implementing regulations for NEPA (40 CFR 1506.6).

Dated: May 20, 2008.

Scott Hicks,

Deputy Field Supervisor, Cheyenne, Wyoming.

[FR Doc. E8–24884 Filed 10–17–08; 8:45 am]

BILLING CODE 4310–55–P

DEPARTMENT OF THE INTERIOR

Fish and Wildlife Service

[FWS–R8–ES–2008–N0262; 81430–1112–0000–F2]

Proposed Low Effect Habitat Conservation for West Colton Terminal Temporary Ethanol Transloading Facility, City of Rialto, County of San Bernardino, CA

AGENCY: Fish and Wildlife Service, Interior.

ACTION: Notice of availability.

SUMMARY: West Colton Rail Terminal, LLC (applicant) has applied to the U.S. Fish and Wildlife Service (Service) for a 3-year incidental take permit for one covered species pursuant to section 10(a)(1)(B) of the Endangered Species Act of 1973, as amended (Act). The application addresses the potential for ''take'' of the endangered Delhi Sands flower-loving fly (*Rhaphiomidas terminatus abdominalis*, ''DSF'') associated with construction of an ethanol unloading facility in the City of Rialto, San Bernardino County, California. A conservation program to mitigate for impacts of the project on the DSF would be implemented as described in the proposed West Colton Terminal Temporary Ethanol Transloading Facility Low-Effect Habitat Conservation Plan (HCP).

We are requesting comments on the permit application and on the preliminary determination that the proposed HCP qualifies as a ''Low-Effect'' Habitat Conservation Plan, eligible for a categorical exclusion under the National Environmental Policy Act (NEPA) of 1969, as amended. The basis for this determination is discussed in the Environmental Action Statement (EAS) and the associated Low Effect Screening Form, which are also available for public review.

DATES: Written comments should be received on or before November 19, 2008.

ADDRESSES: Comments should be addressed to the Field Supervisor, Fish and Wildlife Service, Carlsbad Fish and Wildlife Office, 6010 Hidden Valley Road, Suite 101, Carlsbad, California 92011. Written comments may be sent by facsimile to (760) 918–0638.

FOR FURTHER INFORMATION CONTACT: Ms. Karen Goebel, Assistant Field Supervisor, Carlsbad Fish and Wildlife Office (see **ADDRESSES**); telephone: (760) 431–9440.

SUPPLEMENTARY INFORMATION:

Availability of Documents

Individuals wishing copies of the proposed HCP and EAS should immediately contact the Service by telephone at (760) 431–9440 or by letter to the Carlsbad Fish and Wildlife Office. Copies of the proposed HCP and EAS also are available for public inspection during regular business hours at the Carlsbad Fish and Wildlife Office [see **ADDRESSES**].

Background

Section 9 of the Act and its implementing Federal regulations prohibit the take of animal species listed as endangered or threatened. Take is defined under the Act as to harass, harm, pursue, hunt, shoot, wound, kill, trap, capture or collect listed animal species, or attempt to engage in such conduct (16 U.S.C. 1538). However, under section 10(a) of the Act, the Service may issue permits to authorize incidental take of listed species. ''Incidental take'' is defined by the Act as take that is incidental to, and not the purpose of, carrying out an otherwise lawful activity. Regulations governing incidental take permits for threatened

and endangered species, respectively, are found in the Code of Federal Regulations at 50 CFR 17.22 and 50 CFR 17.32.

The applicant (West Colton Rail Terminal, LLC or WCRT) is seeking a permit for take of the Delhi Sands flower-loving fly during the life of the permit. This species is referred to as the ''DSF'' in the proposed HCP. The DSF is restricted to the Delhi Soils formations within western Riverside and San Bernardino counties in California.

The applicant proposes to construct an ethanol unloading facility on 2.1 acres of land located between the north end of Sycamore Street and South Date Avenue in the City of Rialto, San Bernardino County, California. Approximately 0.21 acre of the project site is considered occupied by the DSF, and we anticipate that all DSF within the 0.21 acre area would be lost during project construction. The purpose of the project is to eliminate truck traffic from local highways currently resulting from trucking the ethanol from the City of Carson to the Colton area gasoline blending terminals. The project will eliminate the over 60-mile truck trip for approximately 40 trucks per day and reduce truck travel to a few thousand yards per load.

The applicant proposes to mitigate impacts to the DSF associated with the covered activities by fully implementing the HCP. The purpose of the proposed HCP's conservation program is to promote biological conservation of the DSF. WCRT proposes to mitigate impacts to DSF by contributing to a habitat management endowment for a conservation parcel known as the ''Owl Property'', which is located northwest of the intersection of Riverside Avenue and Resource Drive in the City of Rialto. WCRT's contribution will fully fund an endowment for DSF habitat management in perpetuity.

The Proposed Action consists of the issuance of an incidental take permit and implementation of the proposed HCP, which includes measures to minimize and mitigate impacts of the project on DSF. Three alternatives to the taking of the listed species under the Proposed Action are considered in the proposed HCP. Under the Original Design Alternative, additional DSF habitat would be impacted at the project site to more efficiently meet the operational goals of the project. Under the Alternate Location Alternative, no DSF habitat would be impacted, but other environmental impacts would be unavoidable. Under the No Action Alternative, no DSF habitat would be impacted or conserved, and truck traffic would not be reduced.

The Service has made a preliminary determination that approval of the proposed HCP qualifies as a categorical exclusion under NEPA, as provided by the Department of the Interior Manual (516 DM8) and as a ''low-effect'' plan as defined by the Habitat Conservation Planning Handbook (November 1996). Determination of Low-effect Habitat Conservation Plans is based on the following three criteria: (1) Implementation of the proposed HCP would result in minor or negligible effects on federally listed, proposed, and candidate species and their habitats; (2) Implementation of the proposed HCP would result in minor or negligible effects on other environmental values or resources; and (3) Impacts of the proposed HCP, considered together with the impacts of other past, present and reasonably foreseeable similarly situated projects, would not result, over time, in cumulative effects to environmental values or resources which would be considered significant.

Based upon this preliminary determination, we do not intend to prepare further NEPA documentation. We will consider public comments in making the final determination on whether to prepare such additional documentation.

Before including your address, phone number, e-mail address, or other personal identifying information in your comment, you should be aware that your entire comment—including your personal identifying information—may be made publicly available at any time. While you can ask us in your comment to withhold your personal identifying information from public review, we cannot guarantee that we will be able to do so.

This notice is provided pursuant to section 10(c) of the Act. We will evaluate the permit application, the proposed HCP, and comments submitted thereon to determine whether the application meets the requirements of section 10(a) of the Act. If the requirements are met, we will issue a permit to West Colton Rail Terminal, LLC for the incidental take of the Delhi Sands flower-loving fly from construction of an ethanol unloading facility in the City of Rialto, San Bernardino County, California.

Dated: October 14, 2008.

Jim A. Bartel,

Field Supervisor, Carlsbad Fish and Wildlife Office, Carlsbad, California.

[FR Doc. E8–24883 Filed 10–17–08; 8:45 am]

BILLING CODE 4310–55–P

DEPARTMENT OF THE INTERIOR

Fish and Wildlife Service

[FWS–R8–ES–2008–0272; 81430–1112–0000–F2]

Proposed Otay Water District Low Effect Habitat Conservation Plan for the Quino Checkerspot Butterfly and Coastal California Gnatcatcher

AGENCY: Fish and Wildlife Service, Interior.

ACTION: Notice of availability.

SUMMARY: We, the U. S. Fish and Wildlife Service (Service), have received an application from the Otay Water District (Applicant) for a 15-year incidental take permit for two covered species pursuant to section 10(a)(1)(B) of the Endangered Species Act of 1973, as amended (Act). The application addresses the potential for ''take'' of the federally endangered Quino checkerspot butterfly (*Euphydryas editha quino*) and the federally threatened coastal California gnatcatcher (*Polioptila californica californica*) associated with the operation and maintenance of the existing recycled water pipeline (the Otay Force Main) and its access road. A conservation program to mitigate for the project activities would be implemented by the Applicant as described in the Otay Water District Low Effect Habitat Conservation Plan for the Quino Checkerspot Butterfly and Coastal California Gnatcatcher (HCP), which would be implemented by the Applicant.

We are requesting comments on the HCP and our preliminary determination that the proposed plan qualifies as a ''low-effect'' Habitat Conservation Plan, eligible for a categorical exclusion under the National Environmental Policy Act (NEPA) of 1969, as amended. The basis for this determination is discussed in the Environmental Action Statement (EAS) and Low Effect Screening Form (Screening Form), which is also available for public review.

DATES: Written comments should be received on or before November 19, 2008.

ADDRESSES: Comments should be addressed to the Field Supervisor, U.S. Fish and Wildlife Service, Carlsbad Fish and Wildlife Office, 6010 Hidden Valley Road, Suite 101, Carlsbad, CA 92011. Written comments may be sent by facsimile to (760) 431–5901.

FOR FURTHER INFORMATION CONTACT: Ms. Karen Goebel, Assistant Field Supervisor, Carlsbad Fish and Wildlife Office (see **ADDRESSES**); telephone (760) 431–9440.

SUPPLEMENTARY INFORMATION:

Availability of Documents

Individuals wishing copies of the proposed HCP and Screening Form, which includes the EAS, should immediately contact the Service by telephone at (760) 431–9440 or by letter to the Carlsbad Fish and Wildlife Office. Copies of the proposed HCP and Screening Form also are available for public inspection during regular business hours at the Carlsbad Fish and Wildlife Office (see **ADDRESSES**).

Background

Section 9 of the Act (16 U.S.C. 1531 *et seq.*) and its implementing Federal regulations prohibit the take of animal species listed as endangered or threatened. Take is defined under the Act as follows, to harass, harm, pursue, hunt, shoot, wound, kill, trap, capture, or collect listed animal species, or to attempt to engage in such conduct (16 U.S.C. 1538). However, under section 10(a) of the Act, the Service may issue permits to authorize incidental take of listed species. ''Incidental take'' is defined by the Act as take that is incidental to, and not the purpose of, carrying out an otherwise lawful activity. Regulations governing incidental take permits for threatened and endangered species, respectively, are found in the Code of Federal Regulations at 50 CFR 17.22 and 50 CFR 17.32.

The Applicant is seeking a permit for take of the Quino checkerspot butterfly and coastal California gnatcatcher during the life of the permit. These species are referred to as the ''Quino'' and ''gnatcatcher,'' respectively, in the proposed HCP.

The Applicant proposes to grade an existing access road located above the Otay Force Main (force main) pipeline and conduct other activities such as replacing valves along the pipeline, resurfacing damaged sections of the access road, clearing vegetation around work areas, and conducting routine inspections and maintenance of the valves and access road. Work areas and the access road are located within a 30-foot easement on the San Diego National Wildlife Refuge. This easement was dedicated prior to the area being incorporated as a national wildlife refuge. All covered activities identified in the low-effect HCP will occur within this easement and new impacts associated with covered activities will not appreciably exceed those currently taking place within the easement. Work areas will be maintained free of vegetation for the life of the permit, thus all initial vegetation clearing activities will be considered permanent impacts. Valve replacement and access road resurfacing will be conducted within the first year of HCP implementation. Activities in subsequent years will entail inspection of the force main, maintenance of work areas, and replacing defective or damaged values. Up to 1.28 acres of gnatcatcher and/or Quino habitat may be lost through implementation of the HCP over 15 years.

The Applicant proposes to mitigate the effects to Quino and gnatcatcher by fully implementing the HCP. The HCP emphasizes protection of habitat through impact avoidance and use of operational protocols, designed to avoid or minimize impacts to Quino and gnatcatcher. The Applicant will supplement these operational protocols, or avoidance and minimization measures, with habitat conservation and management in the San Miguel Habitat Management Area (HMA). To mitigate for permanent impacts, the Applicant will permanently conserve and manage high-quality Quino and gnatcatcher habitat by expending available credits from the San Miguel HMA.

The Proposed Action consists of the issuance of an incidental take permit and implementation of the proposed HCP, which includes measures to mitigate impacts of the proposed activities on Quino and gnatcatcher. Five alternatives to the proposed action are considered in the HCP. Under the No Action Alternative, no permit would be issued and the Applicant would avoid take of Quino and gnatcatcher; however, avoidance of impacts would not be possible for some of the Applicant's activities, which would preclude some critical activities from being completed or require the Applicant to seek individual take authorizations. The other four alternatives address only implementing a single construction component of the proposed activities, eliminating an activity, or deferring the project until a larger, multi-agency multiple species habitat conservation plan could be developed. Most of these alternatives would provide a piecemeal approach to operating and maintaining the force main and would require additional consultation under the ESA. The proposed HCP provides more comprehensive coverage of necessary activities and conservation of Quino and gnatcatcher than either of the other alternatives. In addition, the proposed HCP would be more efficient and timely and would provide the Applicant with long-term predictability concerning the nature of its operations for which incidental takings are permitted, avoiding potential facility-compromising delays.

The Service has made a preliminary determination that approval of the proposed HCP qualifies as a categorical exclusion under NEPA, as provided by the Department of the Interior Manual (516 DM 2, Appendix 1 and 516 DM 6, Appendix 1) and as a ''low-effect'' plan as defined by the Habitat Conservation Planning Handbook (November 1996). Determination of Low-effect Habitat Conservation Plans is based on the following three criteria: (1) Implementation of the proposed HCP would result in minor or negligible effects on federally listed, proposed, and candidate species and their habitats; (2) Implementation of the proposed HCP would result in minor or negligible effects on other environmental values or resources; and (3) Impacts of the proposed HCP, considered together with the impacts of other past, present, and reasonably foreseeable similarly situated projects, would not result, over time, in cumulative effects to environmental values or resources that would be considered significant.

Based upon this preliminary determination, we do not intend to prepare further NEPA documentation. We will consider public comments in making the final determination on whether to prepare such additional documentation.

Public Review

Written comments from interested parties are welcome to ensure that the issues of public concern related to the proposed action are identified. Comments and materials received will be available for public inspection, by appointment, during normal business hours at the office listed in the **ADDRESSES** section of this notice. All comments and materials received, including names and addresses, will become part of the administrative record and may be released to the public.

Our practice is to make comments, including names, home addresses, home phone numbers, and e-mail addresses of respondents, available for public review. Individual respondents may request that we withhold their names and/or home addresses, etc., but if you wish us to consider withholding this information you must state this prominently at the beginning of your comments. In addition, you must present a rationale for withholding this information. This rationale must demonstrate that disclosure would constitute a clearly unwarranted invasion of privacy. Unsupported assertions will not meet this burden. In the absence of exceptional,

documentable circumstances, this information will be released. We will always make submissions from organization or businesses, and from individuals identifying themselves as representatives of or officials of organizations or businesses, available for public inspection in their entirety.

This notice is provided pursuant to section 10(c) of the Act. We will evaluate the permit application, the proposed HCP, and comments submitted thereon to determine whether the application meets the requirements of section 10(a) of the Act. If the requirements are met, we will issue a permit to the Applicant for the incidental take of the Quino checkerspot butterfly and coastal California gnatcatcher associated with the operation and maintenance of the Otay Force Main within the San Diego National Wildlife Refuge located in San Diego County, California.

Dated: October 14, 2008.

Jim A. Bartel,

Field Supervisor, Carlsbad Fish and Wildlife Office, Carlsbad, California.

[FR Doc. E8–24882 Filed 10–17–08; 8:45 am]

BILLING CODE 4310–55–P

DEPARTMENT OF THE INTERIOR

Fish and Wildlife Service

[FWS–R9–EA–2008–N0241; 97600–9424–0000–7e]

TakeMeFishing.org Web Site Advertising Guidelines

AGENCY: U.S. Fish and Wildlife Service, Interior.

ACTION: Notice of availability of proposed guidelines; request for comments.

SUMMARY: The Recreational Boating & Fishing Foundation (RBFF) seeks to sell advertising on its TakeMeFishing.org Web site to help generate revenue from non-Federal funds to expand its outreach program. RBFF has drafted advertising guidelines to determine who can advertise and how the advertising sales will be operated; we invite the general public and other Federal agencies to take this opportunity to comment on these guidelines.

DATES: Your comments must be received or postmarked on or before November 4, 2008.

ADDRESSES: Send your comments on the proposed Web site advertising guidelines to RBFF Project Officer at 4401 N. Fairfax Drive, MS–3103 AEA, Arlington, VA 22203 (U.S. mail or hand delivery) or *Mary_Burke@FWS.gov* (e-mail).

FOR FURTHER INFORMATION CONTACT: RBFF Project Officer *Mary_Burke@fws.gov* (e-mail) or (703) 358–2435.

SUPPLEMENTARY INFORMATION:

Recreational boating and fishing participation rates have declined over the past 5 years. Recreational boating and fishing related activities contribute to conserving aquatic resources through excise taxes collected from sales of fishing equipment and motorboat fuel that fund the Federal Aid in Sport Fish Restoration Program. This program, coupled with fishing license sales, makes up more than 80 percent of the funding for conservation and protection of aquatic resources in the United States. To address the declining participation of recreational boating and fishing, Congress passed the Sportfishing and Boating Safety Act of 1998, which called for Federal appropriations to be used for the National Outreach and Communication Program. The Sport Fishing and Boating Partnership Council developed the ''Strategic Plan for the National Outreach and Communication Program,'' and the Secretary of the Interior approved the Strategic Plan in February 1999.

RBFF is a nonprofit organization created to carry out the National Outreach and Communication Program, whose mission is to increase participation in recreational angling and boating and, through those experiences, increase the public's awareness of and appreciation for the need for conserving and protecting America's aquatic natural resources. RBFF is funded through the Sport Fish Restoration and Boating Trust Fund. This fund is composed of Federal taxes collected on the sale of motorboat fuel and of excise taxes paid by manufacturers of fishing tackle. The U.S. Fish and Wildlife Service (Service) administers RBFF's funding via a cooperative agreement between the Service and RBFF, in the form of a Memorandum of Understanding signed by the Service, the Sport Fishing and Boating Partnership Council, the Association of Fish and Wildlife Agencies, and RBFF.

The plan, which RBFF was created to implement, specifically calls for the implementing organization not to be operated as a ''grants-in-aid'' organization. The plan also calls for RBFF to ''create an industry 'hard dollar' fund mechanism to promote, extend and expand the outreach program.'' In response, RBFF seeks to sell advertising on its TakeMeFishing.org Web site to generate revenue from non-Federal funds to expand its outreach program. RBFF has drafted advertising guidelines to determine who can advertise and how the advertising sales will be operated.

Request for Comments

The U.S. Fish and Wildlife Service is seeking public comment on the draft RBFF advertising guidelines. Comments submitted in response to this notice are a matter of public record. Before including your address, phone number, e-mail address, or other personal identifying information in your comment, you should be aware that your entire comment—including your personal identifying information—may be made publicly available at any time. While you may request that we withhold your personal identifying information from public review, we cannot guarantee that we will be able to do so.

TakeMeFishing.org Proposed Advertising Guidelines

The Recreational Boating & Fishing Foundation (RBFF) strives to make TakeMeFishing.org a valuable resource for its audiences, therefore the user experience is the core of the Web site. This experience is continually reinforced by its distinct look and feel, functionality, personality, and utility. Thus everything that exists within TakeMeFishing.org should conform and contribute to the overall user experience, including the advertising.

Advertising Philosophy

RBFF is committed to protecting our user experience by keeping the site clean, uncluttered, and free from intrusive advertising. We strive to ensure the use of appropriate and tailored messages on our Web site that are based on specific boating and fishing interests and affiliated with the brands, organizations, and businesses that our users value.

RBFF provides the following guidelines to help you communicate more effectively with your desired audience. Please note that all advertising placed within TakeMeFishing.org must adhere to these guidelines, and RBFF reserves the right to reject any advertising that we deem contrary to our advertising philosophy or these guidelines. These guidelines are also subject to change at any time.

These guidelines are not intended as legal advice, but are a general statement of RBFF's advertising standards. RBFF encourages each advertiser and its agency to consult with legal counsel before seeking to place any display advertising on TakeMeFishing.org. Adherence to these guidelines (a) does

not guarantee acceptance of display advertising content for insertion on TakeMeFishing.org, and (b) is not necessarily sufficient to meet the standards of local, State, or Federal laws.

Note: In addition to the guidelines below, all advertising on TakeMeFishing.org must comply with our Privacy Policy (at *http://www.takemefishing.org/general/privacy-policy*) and Disclaimer (at *http://www.takemefishing.org/general/disclaimer*).

1. Content restrictions:

We do not accept advertising from entities debarred or suspended from doing business with the Federal Government (*http://www.epls.gov/*). In addition, we do not accept advertising referencing, facilitating, or promoting the following:

- Liquor, beer, or wine.
- Tobacco products.
- Adult or dating sites with a sexual emphasis.
- Medical or pharmaceutical products and services.
- Drugs or drug paraphernalia.
- Adult products, including adult films, magazines, Web sites, toys, or physical/sexual enhancement products.
- Gambling or gambling portals and educational sites, including without limitation, any online casino, sports books, bingo, or poker.
- Lotteries (other than official State lotteries sponsored by a U.S. State, *e.g.*, Illinois State Lottery).
- Inflammatory religious content.
- Politically religious agendas and/or any known associations with hate, criminal, and/or terrorist activities.
- Political content, political agendas, or political issues for commercial use.
- Hate speech, whether directed at an individual or a group, and whether based upon the race, sex, creed, national origin, religious affiliation, marital status, sexual orientation, or language of such individual or group.
- Web cams or surveillance equipment.
- Web-based non-accredited colleges that offer degrees.
- Ringtones.
- Software downloads, freeware, or shareware.
- Scams, illegal activity, and/or illegal contests, pyramid schemes, or chain letters.
- Loan products that require upfront fees.

2. Advertising language and image content:

- Provocative images will not be accepted.
- Advertising images may not contain, facilitate, or promote adult content, including nudity, sexual terms, or activities that are excessively suggestive or sexual.
- Advertisements may not contain, facilitate, or promote offensive, profane, vulgar, obscene, or inappropriate language.
- Advertisements may not contain, facilitate, or promote defamatory, libelous, slanderous, and/or unlawful content.

3. Copy representation:

- Advertising copy must directly relate to the content on the landing page to which it links.
- Advertising copy must clearly state and represent the company, product, or brand that is being advertised.

4. Copyrights and trademarks:

- Advertisements must not include any content that may be deemed as infringing upon the rights of any third party, including copyright, trademark, privacy, publicity, or other personal or proprietary right, or that is deceptive or fraudulent.
- Advertiser must have intellectual property rights to the advertising copy and images and be permitted to display such copy and images as advertising on TakeMeFishing.org.

5. Downloads:

- No advertisement is permitted to contain a link, whether directly or indirectly, to a site that contains software downloads, freeware, or shareware.
- No advertisement is permitted to facilitate or promote (or contain a link to a site that facilitates or promotes):

(1) Collection of demographic and usage information from a user's computer without the user's expressed consent;

(2) Collection or request of usernames or passwords from any user;

(3) Proxying user names or passwords for the purpose of automating logins to the TakeMeFishing.org Community network;

(4) Any software that (i) ''sneaks'' onto a user's system and performs activities hidden to the user; (ii) may alter, harm, disable or replace any hardware or software installed on the user's computer without express permission from the user; (iii) is bundled as a hidden component of other software whether free or for fee; (iv) automatically downloads without RBFF's express prior approval; (v) presents any download dialog boxes without a user's expressed action; or (vi) may violate or infringe upon the intellectual property rights of any third party, including copyright, trademark, patent, or any other proprietary right.

6. Grammar, spelling, and capitalization:

- Advertising copy must be in logical sentence form and contain grammatically correct spacing.
- Advertisements must use correct spelling.
- Advertisements may not include unnecessary capitalization (such as ''FREE''). Acronyms may be capitalized.
- Advertisements may not include excessive repetition.

7. Incentives:

- No advertisement may offer incentives to viewers for submitting personal information (cell phone numbers, social security numbers, physical addresses, or e-mail addresses), or for performing any other related tasks.

8. Landing pages/Destination URLs:

- Advertisements that contain a URL or domain in the copy must link to that same URL or domain.
- All users must be sent to the same landing page when an advertisement is clicked.
- The advertiser's landing page must match the offer being made in the advertisement and must provide detailed disclosures as appropriate; in particular, full terms and conditions of the offer must be easily accessible.
- Landing pages that generate a pop-up (including ''pop-overs'' and ''pop-unders'') when a user enters or leaves the page are not allowed.
- Advertisements cannot use ''fake'' close behavior (*i.e.*, when a user clicks the ''close'' icon on the page, the page should close down and no other behavior should result).
- Advertisements cannot utilize ''mouse trapping'' whereby the advertiser does not allow users to use their browser ''back button'' and traps them on their site and/or present additional/unexpected behavior (for example: another advertisement or page).
- No advertisement may require viewers clicking on the advertisement to submit personal information (cell phone numbers, physical addresses, or e-mail addresses) on the landing page in order to obtain the information promoted in the advertisement.
- A secure server connection (https) must be used when collecting personal information from users.

9. Prices, discounts, and free offers:

- No advertisement may be deceptive or fraudulent about any offer it makes.
- If an advertisement includes a price, discount, or ''free'' offer, the destination URL that is referenced must link to a page that clearly and accurately offers the exact deal displayed in the advertisement.
- If an advertisement includes a price, discount, or ''free'' offer, the

advertisement must clearly state what action or set of actions is required to qualify for the offer.

10. Punctuation and symbols:

• The use of all symbols, numbers, or letters must adhere to the true meaning of the symbol.

• Repeated and unnecessary punctuation or symbols is not permitted.

• Symbols may not be used to substitute for letters (*e.g.*, ''$ave'' instead of ''save'').

11. Rich Media advertisements:

• All rich media advertisements, including third-party advertisements, must be operationally tested prior to submission for placement on TakeMeFishing.org.

• HTML sniffer code must be implemented in order to detect whether a user's browser is capable of displaying the Shockwave Flash file. A backup banner should be displayed if the user cannot accept Shockwave Flash and is required for all rich media advertisements.

• A banner may not produce audio without user initiation. Once audio begins, there must be a clear ''pause'' or ''stop'' button.

• An advertisement may not display false functionality or contain graphics that simulate interactivity where no such interactivity exists.

12. Spam:

• No advertisement may contain, facilitate or promote ''spam'' or other advertising or marketing content that violates applicable laws, regulations, or industry standards.

13. Take Me Fishing references:

• Advertisements are not permitted to mention or refer to TakeMeFishing.org, its site, or its brand in any manner, including in the title, body, image, or destination URLs.

• Advertisements must not use Take Me Fishing™ logos, trademarks, or site terminology (including Anglers' Legacy and other RBFF graphics, logos, designs, or icons).

• TakeMeFishing.org site features may not be emulated.

Advertiser Responsibilities

It is the advertiser's responsibility to ensure that:

• All advertising it seeks to place on TakeMeFishing.org complies with all applicable Federal, State, and local laws or regulations;

• An advertisement does not violate the intellectual property rights of third parties;

• Offers included in any advertising message include all material terms that an ordinary person would require in making an informed decision about whether to purchase the product or service being offered;

• All claims made in an advertisement have been substantiated before the advertisement is scheduled to appear on TakeMeFishing.org;

• Advertising that includes warranties, guarantees, or other types of assurances to the user complies with all applicable laws, regulations, or guidelines regarding such assurances, including but not limited to those set forth by the Federal Trade Commission (''FTC''); and

• Users are not deceived into providing personal information without the user's knowledge, under false pretenses, or to companies who resell, trade, barter, or otherwise misuse that personal information.

RBFF Rights

RBFF reserves the right, but is not under any obligation to:

• Review or request changes to any advertisement scheduled for insertion on TakeMeFishing.org;

• Accept, retract, or reject, at any time, any advertisement submitted for placement on TakeMeFishing.org, in its sole discretion, whether on the basis of these guidelines, advertising format, targeting criteria, or for any other reason;

• Review any advertisement to determine the appropriateness of the advertisement for the TakeMeFishing.org user audience; or

• Modify these guidelines or their standards governing advertising on TakeMeFishing.org at any time without notice.

Specifically, RBFF reserves the right to reject or retract, at any time, any advertising deemed to, in RBFF's sole opinion:

• Be misleading, deceptive, false, or untrue;

• Use ''bait and switch'' tactics, *i.e.*, advertising that promotes an unavailable product, service, or price as a means of luring the user into purchasing a different product;

• Promote or glorify violence, crime, obscenity, the illegal use of weapons, or to provide instructions on how to ''get away'' with crimes or unlawful activity;

• Promote stereotypes, or inaccurately portray or attack an individual or group on the basis of age, color, national origin, race, religion, sex, sexual orientation, or handicap;

• Be offensive or disturbing to users of TakeMeFishing.org, or likely to cause outrage, general disapproval, or negative opinion within the community; or

• Portray minors (or persons who, in RBFF's opinion, appear to be underage) in a manner that is sexually suggestive or otherwise age-inappropriate.

Dated: September 24, 2008.

Rowan W. Gould,

Acting Director.

[FR Doc. E8–24850 Filed 10–17–08; 8:45 am]

BILLING CODE 4310–55–P

DEPARTMENT OF THE INTERIOR

Bureau of Land Management

[F–14873–A, F–14873–A2; AK–965 1410–KC–P]

Alaska Native Claims Selection

AGENCY: Bureau of Land Management, Interior.

ACTION: Notice of decision approving lands for conveyance.

SUMMARY: As required by 43 CFR 2650.7(d), notice is hereby given that an appealable decision approving the surface and subsurface estates in certain lands for conveyance pursuant to the Alaska Native Claims Settlement Act will be issued to Kasigluk Inc. The lands are in the vicinity of Kasigluk, Alaska, and are located in:

Seward Meridian, Alaska

T. 10 N., R. 75 W.,
Sec. 15.
Containing approximately 162 acres.
T. 11 N., 75 W.,
Secs. 19 to 23, inclusive;
Secs. 28 to 32, inclusive.
Containing approximately 3,164 acres.
T. 11 N., R. 76 W.,
Secs. 19 to 36, inclusive.
Containing approximately 8,472 acres.
T. 7 N., R. 77 W.,
Secs. 5 and 6.
Containing approximately 970 acres.
T. 9 N., R. 77 W.,
Secs. 4 to 9, inclusive;
Secs. 16 to 21, inclusive;
Secs. 28 to 33, inclusive.
Containing approximately 9,808 acres.
T. 10 N., R. 77 W.,
Secs. 3 to 10, inclusive;
Secs. 16 to 21, inclusive;
Secs. 28 to 33, inclusive.
Containing approximately 8,837 acres.
T. 11 N., R. 77 W.,
Secs. 7 and 9;
Secs. 13 to 36, inclusive.
Containing approximately 13,844 acres.
Aggregating approximately 45,297 acres.

The subsurface estate in these lands will be conveyed to Calista Corporation when the surface estate is conveyed to Kasigluk, Inc. Notice of the decision will also be published four times in the Tundra Drums.

DATES: The time limits for filing an appeal are:

1. Any party claiming a property interest which is adversely affected by the decision shall have until November 19, 2008 to file an appeal.

2. Parties receiving service of the decision by certified mail shall have 30 days from the date of receipt to file an appeal.

Parties who do not file an appeal in accordance with the requirements of 43 CFR Part 4, Subpart E, shall be deemed to have waived their rights.

ADDRESSES: A copy of the decision may be obtained from: Bureau of Land Management, Alaska State Office, 222 West Seventh Avenue, #13, Anchorage, Alaska 99513–7504.

FOR FURTHER INFORMATION, CONTACT: The Bureau of Land Management by phone at 907–271–5960, or by e-mail at *ak.blm.conveyance@ak.blm.gov*. Persons who use a telecommunication device (TTD) may call the Federal Information Relay Service (FIRS) at 1–800–877–8330, 24 hours a day, seven days a week, to contact the Bureau of Land Management.

Linda L. Keskitalo,

Land Law Examiner, Land Transfer Adjudication II.

[FR Doc. E8–24839 Filed 10–17–08; 8:45 am]

BILLING CODE 4310–JA–P

DEPARTMENT OF THE INTERIOR

Bureau of Land Management

[LLOROR957000–L14200000–BJ000: HAG09–0003]

Filing of Plats of Survey: Oregon/Washington

AGENCY: U.S. Department of the Interior, Bureau of Land Management.

ACTION: Notice.

SUMMARY: The plats of survey of the following described lands were officially filed in the Bureau of Land Management Oregon/Washington State Office, Portland, Oregon, on June 18, 2008.

Willamette Meridian

Washington

T. 23 N., R. 13 W., accepted May 14, 2008.

Oregon

T. 2 S., R. 6 W., accepted May 21, 2008.

The plats of survey of the following described lands were officially filed in the Bureau of Land Management Oregon/Washington State Office, Portland, Oregon, on August 19, 2008.

Willamette Meridian

Washington

T. 12 N., R. 19 E., accepted July 2, 2008.

The plats of survey of the following described lands were officially filed in the Bureau of Land Management Oregon/Washington State Office, Portland, Oregon, on September 26, 2008.

Willamette Meridian

Washington

T. 33 N., R. 28 E., accepted August 18, 2008.

Oregon

T. 36 S., R. 5 W., accepted August 7, 2008.
T. 33 S., R. 2 E., accepted August 20, 2008.
T. 33 S., R. 1 E., accepted August 20, 2008.
T. 20 S., R. 6 W., accepted August 26, 2008.
T. 40 S., R. 7 W., accepted September 2, 2008.
T. 12 S., R. 43 E., accepted September 2, 2008.

A copy of the plats may be obtained from the Land Office at the Oregon/Washington State Office, Bureau of Land Management, 333 SW. 1st Avenue, Portland, Oregon 97204, upon required payment. A person or party who wishes to protest against a survey must file a notice that they wish to protest (at the above address) with the Oregon/Washington State Director, Bureau of Land Management, Portland, Oregon.

For further information contact: Chief, Branch of Geographic Sciences, Bureau of Land Management, (333 SW. 1st Avenue) P.O. Box 2965, Portland, Oregon 97208.

Dated: October 8, 2008.

Fred O'Ferrall,

Branch of Lands and Minerals Resources.

[FR Doc. E8–24837 Filed 10–17–08; 8:45 am]

BILLING CODE 4310–33–P

DEPARTMENT OF THE INTERIOR

National Park Service

National Register of Historic Places; Notification of Pending Nominations and Related Actions

Nominations for the following properties being considered for listing or related actions in the National Register were received by the National Park Service before October 4, 2008. Pursuant to section 60.13 of 36 CFR Part 60 written comments concerning the significance of these properties under the National Register criteria for evaluation may be forwarded by United States Postal Service to the National Register of Historic Places, National Park Service, 1849 C St., NW., 2280, Washington, DC 20240; by all other carriers, National Register of Historic Places, National Park Service,1201 Eye St., NW., 8th floor, Washington, DC 20005; or by fax, 202–371–6447. Written or faxed comments should be submitted by November 4, 2008.

J. Paul Loether,

Chief, National Register of Historic Places/National Historic Landmarks Program.

ARKANSAS

Cross County

New Hope School, 3762 Hwy. 284, Wynne, 08001037.

Pulaski County

East End Methodist Episcopal Church, 2401 E. Washington Ave., North Little Rock, 08001038.

Yell County

Dardanelle Commercial Historic District, Roughly bounded by Front, Oak, 2nd and Pine Sts., Dardanelle, 08001039.

FLORIDA

Martin County

Cypress Lodge, 18681 SW. Conners Hwy., Port Mayaca, 08001040.

Miami-Dade County

Normandy Isles Historic District (North Beach Community (1919–1963), MPS) Roughly by Normandy Shores Golf Course, Indian Creek, Biscayne Bay, Rue Versailles, 71st., Rue Notre Dame, Miami Beach, 08001041.

IOWA

Fayette County

Hobson Block (Iowa's Main Street Commercial Architecture MPS), 110–114 S. Vine St., West Union, 08001042.

Hancock County

Avery Theater, The, 495 State St., Garner, 08001043.

MARYLAND

Worcester County

Makemie Memorial Presbyterian Church, 103 Market St., Snow Hill, 08001044.

MISSISSIPPI

Leflore County

Greenwood Underpass, Main St. between Jackson St. and W. Taft St., Greenwood, 08001045.

Madison County

Young House, 3463 N. Liberty St., Canton, 08001046.

NEW YORK

Greene County

Tannersville Main Street Historic District, 5898–6144 Main St., 10 Spring St., Tannersville, 08001047.

New York County

General Society of Mechanics and Tradesmen, 20 W. 44th St., New York, 08001048.

TENNESSEE

Bledsoe County

Bledsoe County Jail, 128 Frazier St., Pikeville, 08001049.

VIRGINIA

Charlotte County

Keysville Railroad Station, Railroad Ave., Keysville, 08001050.

Fauquier County

Cromwell's Run Rural Historic District (Boundary Increase), Bounded by Fauquier County line on the N., existing Cromwell's Run Rural Historic District on the E., Atoka, 08001051.

Fredericksburg Independent City

Rowe House, 801 Hanover St., Fredericksburg, 08001052.

Galax Independent City

Galax Commercial Historic District (Boundary Increase), 107 West Oldtown St., Galax, 08001053.

Lynchburg Independent City

Kemper Street Industrial Historic District, 1300–1500 (odd) Kemper St., 1200–1300 (even) Campbell Ave., Lynchburg, 08001054.

Pittsylvania County

Seven Springs Farm, 224 Meadow View Ct., Danville, 08001056.

Prince William County

Camp French (Campaigns for the Control of Navigation on the Lower Potomac River, 1861–1862, Virginia, Maryland, and DC, MPS), Address Restricted, Marine Corps Base, Quantico, 08001055.

Rising Hill Camp (Campaigns for the Control of Navigation on the Lower Potomac River, 1861–1862, Virginia, Maryland, and DC, MPS), Address Restricted, Marine Corps Base, Quantico, 08001057.

Southampton County

Neaton-Powell House, 32142 South Main St., Boykins, 08001058.

Stafford County

Tennessee Camp (Campaigns for the Control of Navigation on the Lower Potomac River, 1861–1862, Virginia, Maryland, and DC, MPS), Address Restricted, Marine Corps Base, Quantico, 08001059.

WISCONSIN

Wood County

Roddis, Hamilton and Catherine, House, 1108 E. 4th St., Marshfield, 08001060.

WYOMING

Weston County

Newcastle Commercial District, Bounded by Burlington Northern Santa-Fe Railroad tracks and West Main St., Newcastle, 08001061.

Toomey's Mills, 500 W. Main St., Newcastle, 08001062.

Request for removal has been made for the following resources:

MISSISSIPPI

Harrison County

Bailey House, 1333 E. Beach Blvd., Biloxi, 84002160.

Biloxi's Tivoli Hotel, 863 E. Beach Dr., Biloxi, 84002167.

Church of the Redeemer, Bellman St., Biloxi, 84002177.

Hermann House, 523 E. Beach Blvd., Biloxi, 84002169.

Randall's Tavern, 919 Beach Blvd., Pascagoula, 91001807.

[FR Doc. E8–24828 Filed 10–17–08; 8:45 am]

BILLING CODE 4310–70–P

DEPARTMENT OF THE INTERIOR

Bureau of Reclamation

Privacy Act of 1974, as Amended; System of Records

AGENCY: Bureau of Reclamation, Interior.

ACTION: Notice of a new system of records and proposal to exempt the system from certain Privacy Act requirements.

SUMMARY: The Department of the Interior (DOI) is issuing public notice of its intent to establish a system of records in its inventory of records systems subject to the Privacy Act of 1974 (5 U.S.C. 552a). The Department is also issuing notice of its intent to exempt the system from specific Privacy Act requirements, as described within the section titled ''Exemptions claimed for the system.'' The system of records is called Interior—WBR–50, Reclamation Law Enforcement Management Information System (RLEMIS).

DATES: Comments received on or before December 1, 2008 will be considered.

ADDRESSES: Comments on this proposed system may be submitted to the Bureau of Reclamation, Attention: Casey Snyder (84–21300), Denver Federal Center, Building 67, or P.O. Box 25007, Denver, CO 80225. Comments may also be submitted by e-mail to *csnyder@do.usbr.gov*.

FOR FURTHER INFORMATION CONTACT: Steven J. Jackson, Threat Manager, Office of Law Enforcement, Bureau of Reclamation, 303–445–2883.

SUPPLEMENTARY INFORMATION: The primary purpose of the system is for the Bureau of Reclamation's (Reclamation) Office of Security, Safety, and Law Enforcement, Office of Law Enforcement to maintain a database in both paper and electronic media relevant to information received and collected as part of investigations, incidents, and suspicious activities involving Reclamation.

Reclamation has taken steps to minimize any impacts on an individual's privacy and to minimize the amount of personal data contained within the system. All information goes through a hierarchical review process to ensure that only relevant data is entered into the system.

The system will be effective as proposed at the end of the comment period unless comments are received which would require a contrary determination. Reclamation will publish a revised notice if changes are made based upon a review of comments received.

Before including your address, phone number, e-mail address, or other personal identifying information in your comment, you should be aware that your entire comment—including your personal identifying information—may be made publicly available at any time. While you can ask us in your comment to withhold your personal identifying information from public review, we cannot guarantee that we will be able to do so.

A copy of the system notice for Interior—WBR–50, Reclamation Law Enforcement Management Information System (RLEMIS), follows.

Dated: September 15, 2008

Dave Achterberg,

Director, Security, Safety and Law Enforcement, Bureau of Reclamation, Denver, Colorado.

INTERIOR—WBR–50

SYSTEM NAME:

Reclamation Law Enforcement Management Information System (RLEMIS).

SYSTEM LOCATION:

Bureau of Reclamation (Reclamation)/ U.S. Fish and Wildlife Service, Offices of Law Enforcement, 755 Parfet, Suite 230, Lakewood, Colorado 80225.

CATEGORIES OF INDIVIDUALS COVERED BY THE SYSTEM:

The categories of individuals covered by the system are: Law enforcement personnel, official foreign visitors, potential and known subjects of incidents and suspicious activities.

CATEGORIES OF RECORDS IN THE SYSTEM:

Records maintained on criminal activity and intelligence information covered by the system include, but are not limited to, the following data fields: Subject name; personal identifiers (such as Social Security number, date of birth, passport number); physical characteristics (such as sex, eye color, weight); contact information (such as address, telephone number, employer);

and information about the incident or investigation (such as case agent, source reliability, activity date, narrative, disposition, vehicle information, impacted Reclamation facilities).

AUTHORITY FOR MAINTENANCE OF THE SYSTEM:

5 U.S.C. 301; 40 U.S.C. 486; 44 U.S.C. 3101; Public Law 107–69; 43 U.S.C. 373b and 373c; Presidential Memorandum on Upgrading Security at Federal Facilities, June 28, 1995; Homeland Security Presidential Directives, HSPD 7 and 12; USA PATRIOT ACT of 2001, USA PATRIOT Improvement Act of 2005, E.O. 1233, as amended, E.O. 13383, DHS MOU Concerning Information Sharing, Homeland Security Act of 2002, National Security Act of 1947 as amended, Intelligence Reform and Terrorism Prevention Act of 2004 and 28 CFR part 23.

PURPOSE(S):

The primary purpose of the system is to ensure the safety and security of Reclamation's employees, the general public, as well as Reclamation facilities, lands, waters, and physical and cyber infrastructure. RLEMIS collects, stores, and allows for retrieval of historical and current information on all incidents/investigations reported at Reclamation facilities, and maintains a record of official foreign visitors to Reclamation facilities. The database maintained is relevant to information received by, and collected as part of, investigations and inquiries conducted by Reclamation's Office of Law Enforcement. RLEMIS is a secure system which is completely independent from other systems.

ROUTINE USES OF RECORDS MAINTAINED IN THE SYSTEM, INCLUDING CATEGORIES OF USERS AND THE PURPOSES OF SUCH USES:

The primary use of records stored in RLEMIS is for investigative/analytical purposes. RLEMIS ensures accountability related to the systematic management, analysis, and reporting of information related to law enforcement. This provides Reclamation's Office of Law Enforcement with an efficient law enforcement reporting and intelligence system.

RLEMIS will enable authorized Reclamation personnel to:

- Capture, integrate, and share law enforcement and related information from multiple sources.
- Meet reporting requirements.
- Assist with analysis and prioritization of protection efforts.

DISCLOSURES:

DISCLOSURES OUTSIDE THE DEPARTMENT OF THE INTERIOR MAY BE MADE WITHOUT THE PERMISSION OF THE SUBJECT OF THE RECORDS IF THE RECORDS WILL BE DISCLOSED:

(1)(a) To any of the following entities or individuals, when the circumstances set forth in paragraph (b) are met:

(i) The U.S. Department of Justice (DOJ);

(ii) A court or an adjudicative or other administrative body;

(iii) A party in litigation before a court or an adjudicative or other administrative body; or

(iv) Any DOI employee acting in his or her individual capacity if DOI or DOJ has agreed to represent that employee or pay for private representation of the employee;

(b) When:

(i) One of the following is a party to the proceeding or has an interest in the proceeding:

(A) DOI or any component of DOI;

(B) Any other Federal agency appearing before the Office of Hearings and Appeals;

(C) Any DOI employee acting in his or her official capacity;

(D) Any DOI employee acting in his or her individual capacity if DOI or DOJ has agreed to represent that employee or pay for private representation of the employee;

(E) The United States, when DOJ determines that DOI is likely to be affected by the proceeding; and

(ii) DOI deems the disclosure to be:

(A) Relevant and necessary to the proceeding; and

(B) Compatible with the purpose for which the records were compiled.

(2) To a congressional office in response to a written inquiry regarding an individual included in the RLEMIS database, or the heir of such individual if the individual is deceased.

(3) To appropriate Federal, State, local, or foreign law enforcement or intelligence agencies responsible for investigating or prosecuting the violation of or for enforcing or implementing a statute, rule, regulation, order or license, when DOI becomes aware of a violation or potential violation of a statute, rule, regulation, order, or license.

(4) To an official of another Federal agency to provide information needed in the performance of official duties related to reconciling or reconstructing data files, in support of the functions for which the records were collected and maintained.

(5) To Federal, State, or local agencies that have requested information relevant or necessary to the hiring, firing, or retention of an employee, contractor, etc., or the issuance of a security clearance, license, contract, grant, or other benefit.

(6) To representatives of the National Archives and Records Administration to conduct records management inspections under the authority of 44 U.S.C. 2903 and 2904.

(7) To State and local governments and tribal organizations to provide information needed in response to court order and/or discovery purposes related to litigation.

(8) To an expert, consultant, or contractor (including employees of the contractor) of DOI that performs, on DOI's behalf, services requiring access to these records.

(9) To appropriate agencies, entities, and persons when:

(a) It is determined that the security or confidentiality of information in the system of records has been compromised; and

(b) DOI has determined that as a result of the suspected or confirmed compromise there is a risk of harm to economic or property interest, identity theft or fraud, or harm to the security or integrity of this system or other systems or programs (whether it is maintained by DOI or another agency or entity) that rely upon the compromised information; and

(c) The disclosure is made to such agencies, entities, and persons who are reasonably necessary to assist in connection with DOI's efforts to respond to the suspected or confirmed compromise and prevent, minimize, or remedy such harm.

(10) Pursuant to 5 U.S.C. 552a(b)(12), records can be disclosed to consumer reporting agencies as they are defined in the Fair Credit Reporting Act.

RELEASE OF INFORMATION:

(a) The release of information under the above circumstances should only occur when it will not:

(i) Interfere with ongoing law enforcement proceedings;

(ii) Risk the health or safety of an individual; or

(iii) Reveal the identity of an informant or witness that has received an explicit assurance of confidentiality from the U.S. Government.

(b) Social Security Numbers should not be released under these circumstances unless the Social Security Number belongs to the individual requester.

POLICIES AND PRACTICES FOR STORING, RETRIEVING, ACCESSING, RETAINING, AND DISPOSING OF RECORDS IN THE SYSTEM:

STORAGE:

Records may be stored both in folders in paper form and in computer systems in electronic form. The main storage for the system will be electronic records contained in the RLEMIS database. The records stored in RLEMIS are maintained on a stand alone server that is provided with physical security and are not retrievable without a username and password. Paper records are stored in locked cabinets in a room requiring both proximity card and pass-code access. After hours, the storage space is locked and alarmed. Law enforcement response is available for both the storage space and server.

RETRIEVABILITY:

Records are retrievable by name, personal identifiers (date of birth, Social Security Number, address, etc.), organization information (name and address), vehicle type and license, incident type and location, case agent, incident/investigation status (open, closed, etc.), date, and foreign visitor trip information (date, citizenship, location, etc.).

SAFEGUARDS:

Records are maintained with safeguards meeting the requirements of 43 CFR 2.51 for manual and computerized records. The records are accessible to Reclamation personnel on a need-to-know basis and to those whose official duties require such access. Disclosure of information through remote terminals is restricted through the use of passwords and username combinations, and sign-on protocols, which are periodically changed. The related Privacy Impact Assessment has been completed on RLEMIS. The Information Security Plan establishes access controls and safeguarded measures to protect the information of individuals. All individuals using the database are required to log off the password protected file server and computers at the end of each day. Manual and electronic records are maintained in conformity with Office of Management and Budget and Departmental Guidelines reflecting the implementation of the Federal Information Security Management Act.

RETENTION AND DISPOSAL:

Records are retained and disposed of according to various law enforcement and security legislation and 28 CFR part 23.

SYSTEM MANAGER(S) AND ADDRESS:

Steven J. Jackson, Threat Manager, Office of Law Enforcement (84–42000), Bureau of Reclamation, P.O. Box 25007, Denver, Colorado 80225–0007.

RECORD SOURCE CATEGORIES:

Incident information is obtained from subjects, complainants, witnesses, official respondents, and investigating officials.

EXEMPTIONS CLAIMED FOR THE SYSTEM:

Under the general exemption authority provided by 5 U.S.C. 552a(j)(2), the DOI has adopted a regulation, 43 CFR 2.79(a), which exempts this system of records from the provisions of 5 U.S.C. 552a. The records and reports contained in RLEMIS are exempted, pursuant to 5 U.S.C. 552a(j)(2), from Privacy Act subsections (c)(3) and (c)(4); (d); (e)(1) through (e)(3), (e)(4)(G) through (e)(4)(I), (e)(5), (e)(8); (f); and (g). This system of records is also exempt from the portions of the regulations in 43 CFR part 2, subpart G, which implement the above 5 U.S.C. 552a subsections.

Reasons for exemptions: Reclamation's RLEMIS systems of records are exempted from the above provisions of the Privacy Act for the following reasons:

(1) 5 U.S.C. 552a(c)(3). This section requires an agency to make the accounting of each disclosure of records available to the individual named in the record upon request. Release of accounting of disclosures would alert the subjects of an investigation to the existence of the investigation and the fact that they are subjects of the investigation. The release of such information to the subjects of an investigation would provide them with significant information concerning the nature of the investigation, and could seriously impede or compromise the investigation, endanger the physical safety of confidential sources, witnesses and their families, and lead to the improper influencing of witnesses, the destruction of evidence, or the fabrication of testimony.

(2) 5 U.S.C. 552a(c)(4); (d); (e)(4)(G) and (e)(4)(H); (f); and (g). Granting access to records in RLEMIS could inform the subject of an investigation of an actual or potential criminal violation of the existence of that investigation, of the nature and scope of the information and evidence obtained, of the identity of confidential sources, witnesses, and law enforcement personnel, and could provide information to enable the subject to avoid detection or apprehension. Granting access to such information could seriously impede or compromise an investigation; endanger the physical safety of confidential sources, witnesses, and law enforcement personnel, as well as their families; lead to the improper influencing of witnesses, the destruction of evidence, or the fabrication of testimony; and disclose investigative techniques and procedures. In addition, granting access to such information could disclose classified, security-sensitive, or confidential information and could constitute an unwarranted invasion of the personal privacy of others.

(3) 5 U.S.C. 552a(e)(1). The application of this provision could impair investigations and law enforcement, because it is not always possible to determine the relevance or necessity of specific information in the early stages of an investigation. Relevance and necessity are often questions of judgment and timing, and it is only after the information is evaluated that the relevance and necessity of such information can be established. In addition, during the course of the investigation, the investigator may obtain information which is incidental to the main purpose of the investigation but which may relate to matters under the investigative jurisdiction of another agency. Such information cannot readily be segregated. Furthermore, during the course of the investigation, an investigator may obtain information concerning the violation of laws outside the scope of the investigator's jurisdiction. In the interest of effective law enforcement, Reclamation investigators should retain this information, since it can aid in establishing patterns of criminal activity and can provide valuable leads for other law enforcement agencies.

(4) 5 U.S.C. 552a(e)(2). The application of this provision could impair investigations and law enforcement by alerting the subject of an investigation of the existence of the investigation, enabling the subject to avoid detection or apprehension, to influence witnesses improperly, to destroy evidence, or to fabricate testimony. In addition, in certain circumstances, the subject of an investigation cannot be required to provide information to investigators, and information must be collected from other sources. Furthermore, it is often necessary to collect information from sources other than the subject of the investigation to verify the accuracy of the evidence collected.

(5) 5 U.S.C. 552a(e)(3). This section requires an agency to inform each person whom it asks to supply information, on a form that can be

retained by the person, of the authority which the information is sought and whether disclosure is mandatory or voluntary; of the principal purposes for which the information is intended to be used; of the routine uses which may be made of the information; and the effects on the person, if any, of not providing all or any part of the requested information. The application of this provision could provide the subject of an investigation with substantial information about the nature of that investigation, which could interfere with the investigation. Moreover, providing such information to the subject of an investigation could seriously impede or compromise an undercover investigation by revealing its existence and could endanger the physical safety of confidential sources, witnesses, and investigators by revealing their identities.

(6) 5 U.S.C. 552a(e)(4)(I). The application of this section could disclose investigative techniques and procedures and cause sources to refrain from giving such information because of fear of reprisal, or fear of breach of promise(s) of anonymity and confidentiality. This could compromise Reclamation's ability to conduct investigations and to identify, detect and apprehend violators.

(7) 5 U.S.C. 552a(e)(5). This section requires an agency to maintain its records with such accuracy, relevance, timeliness, and completeness as is reasonably necessary to assure fairness to the individual in making any determination about the individual. In collecting information for criminal law enforcement purposes, it is not possible to determine in advance what information is accurate, relevant, timely, and complete. Material that may seem unrelated, irrelevant, or incomplete when collected may take on added meaning or significance as the investigation progresses. The restrictions of this provision could interfere with the preparation of a complete investigative report, thereby impeding effective law enforcement.

(8) 5 U.S.C. 552a(e)(8). This section requires an agency to make reasonable efforts to serve notice on an individual when any record on the individual is made available to any person under compulsory legal process when that process becomes a matter of public record. Complying with this provision could prematurely reveal an ongoing criminal investigation to the subject of the investigation.

[FR Doc. E8–24836 Filed 10–17–08; 8:45 am]

BILLING CODE 4310–MN–P

INTERNATIONAL TRADE COMMISSION

[Investigation Nos. 731–TA–394–A & 399–A (Second Review) (Remand)]

Ball Bearings From Japan and the United Kingdom

AGENCY: United States International Trade Commission.

ACTION: Notice of remand proceedings.

SUMMARY: The U.S. International Trade Commission (''Commission'') hereby gives notice of the court-ordered remand of its affirmative determinations in the five-year reviews of the antidumping orders on ball bearings from Japan and the United Kingdom. For further information concerning the conduct of this proceeding and rules of general application, consult the Commission's Rules of Practice and Procedure, part 201, subparts A through E (19 CFR part 201), and part 207, subpart A (19 CFR part 207).

DATES: *Effective Date:* October 8, 2008.

FOR FURTHER INFORMATION CONTACT: Russell Duncan, Office of Investigations, telephone 202–708–4727, or David Goldfine, Office of General Counsel, telephone 202–708–5452, U.S. International Trade Commission, 500 E Street, SW., Washington, DC 20436. Hearing-impaired persons can obtain information on this matter by contacting the Commission's TDD terminal on 202–205–1810. Persons with mobility impairments who will need special assistance in gaining access to the Commission should contact the Office of the Secretary at 202–205–2000. General information concerning the Commission may also be obtained by accessing its Internet server *(http://www.usitc.gov).* The public record of investigation Nos. 731–TA–340 E & H may be viewed on the Commission's electronic docket (''EDIS'') at *http://edis.usitc.gov.*

SUPPLEMENTARY INFORMATION:

Background.—In June 2006, the Commission determined that revocation of the antidumping duty orders on ball bearings from France, Germany, Italy, Japan, and the United Kingdom would be likely to lead to continuation or recurrence of material injury to an industry in the United States within a reasonably foreseeable time. The Commission's determinations for Japan and the United Kingdom were appealed to the Court of International Trade. On September 9, 2008, the Court issued a decision remanding the matter to the Commission for further proceedings. *NSK* v. *United States,* Slip Op. 08–95 (Ct. Int'l Trade, Sept. 9, 2008). In its opinion, the Court issued an order instructing the Commission to (1) ''conduct a *Bratsk* analysis of non-subject imports as outlined in this opinion;''(2) ''reassess supply conditions within the domestic industry,'' *i.e.*, the industry's restructuring efforts during the period of review, and (3) ''reexamine its findings with regard to likely impact and its decision to cumulate imports from the United Kingdom in light of changes in its determinations that may result as a consequence of the foregoing remand instructions.''

Participation in the proceeding.—Only those persons who were interested parties to the reviews (*i.e.*, persons listed on the Commission Secretary's service list) and parties to the appeal may participate in the remand proceeding. Such persons need not make any additional filings with the Commission to participate in the remand proceeding. Business proprietary information (''BPI'') referred to during the remand proceeding will be governed, as appropriate, by the administrative protective order issued in the reviews.

Written submissions.—The Commission is re-opening the record in this proceeding to obtain information to conduct a *Bratsk* analysis of non-subject imports as outlined in the Court's opinion. The Commission will permit the parties to file comments pertaining to the specific issues that are the subject of the Court's remand instructions and, in this regard, may comment on the new information obtained on remand. Comments should be limited to no more than fifteen (15) double-spaced and single-sided pages of textual material. The parties may not themselves submit any new factual information in their comments and may not address any issue other than those that are the subject of the Court's remand instructions. Any such comments must be filed with the Commission no later than November 28, 2008.

All written submissions must conform with the provisions of section 201.8 of the Commission's rules; any submissions that contain BPI must also conform with the requirements of sections 201.6, 207.3, and 207.7 of the Commission's rules. The Commission's rules do not authorize filing of submissions with the Secretary by facsimile or electronic means, except to the extent permitted by section 201.8 of the Commission's rules, as amended, 67 FR 68036 (Nov. 8, 2002).

In accordance with sections 201.16(c) and 207.3 of the Commission's rules, each document filed by a party to the investigation must be served on all other

parties to the investigation (as identified by either the public or BPI service list), and a certificate of service must be timely filed. The Secretary will not accept a document for filing without a certificate of service.

Parties are also advised to consult with the Commission's Rules of Practice and Procedure, part 201, subparts A through E (19 CFR part 201), and part 207, subpart A (19 CFR part 207) for provisions of general applicability concerning written submissions to the Commission.

By order of the Commission.

Issued: October 14, 2008

Marilyn R. Abbott,

Secretary to the Commission.

[FR Doc. E8–24890 Filed 10–17–08; 8:45 am]

BILLING CODE 7020–02–P

INTERNATIONAL TRADE COMMISSION

[Investigation No. 731–TA–1012 (Review)]

Certain Frozen Fish Fillets From Vietnam

AGENCY: United States International Trade Commission.

ACTION: Notice of Commission determination to conduct a full five-year review concerning the antidumping duty order on certain frozen fish fillets from Vietnam.

SUMMARY: The Commission hereby gives notice that it will proceed with a full review pursuant to section 751(c)(5) of the Tariff Act of 1930 (19 U.S.C. 1675(c)(5)) to determine whether revocation of the antidumping duty order on certain frozen fish fillets from Vietnam would be likely to lead to continuation or recurrence of material injury within a reasonably foreseeable time. A schedule for the review will be established and announced at a later date. For further information concerning the conduct of this review and rules of general application, consult the Commission's Rules of Practice and Procedure, part 201, subparts A through E (19 CFR part 201), and part 207, subparts A, D, E, and F (19 CFR part 207).

DATES: *Effective Date:* October 6, 2008.

FOR FURTHER INFORMATION CONTACT: Mary Messer (202–205–3193), Office of Investigations, U.S. International Trade Commission, 500 E Street, SW., Washington, DC 20436. Hearing-impaired persons can obtain information on this matter by contacting the Commission's TDD terminal on 202–205–1810. Persons with mobility impairments who will need special assistance in gaining access to the Commission should contact the Office of the Secretary at 202–205–2000. General information concerning the Commission may also be obtained by accessing its Internet server (*http://www.usitc.gov*). The public record for this review may be viewed on the Commission's electronic docket (EDIS) at *http://edis.usitc.gov.*

SUPPLEMENTARY INFORMATION: On October 6, 2008, the Commission determined that it should proceed to a full review in the subject five-year review pursuant to section 751(c)(5) of the Act. The Commission found that both the domestic and respondent interested party group responses to its notice of institution (73 FR 37487, July 1, 2008) were adequate. A record of the Commissioners' votes, the Commission's statement on adequacy, and any individual Commissioner's statements will be available from the Office of the Secretary and at the Commission's Web site.

Authority: This review is being conducted under authority of title VII of the Tariff Act of 1930; this notice is published pursuant to section 207.62 of the Commission's rules.

By order of the Commission.

Issued: October 14, 2008.

Marilyn R. Abbott,

Secretary to the Commission.

[FR Doc. E8–24894 Filed 10–17–08; 8:45 am]

BILLING CODE 7020–02–P

INTERNATIONAL TRADE COMMISSION

[Investigation No. 731–TA–752 (Second Review)]

Crawfish Tail Meat From China

AGENCY: United States International Trade Commission.

ACTION: Scheduling of an expedited five-year review concerning the antidumping duty order on crawfish tail meat from China.

SUMMARY: The Commission hereby gives notice of the scheduling of an expedited review pursuant to section 751(c)(3) of the Tariff Act of 1930 (19 U.S.C. 1675(c)(3)) (the Act) to determine whether revocation of the antidumping duty order on crawfish tail meat from China would be likely to lead to continuation or recurrence of material injury within a reasonably foreseeable time. For further information concerning the conduct of this review and rules of general application, consult the Commission's Rules of Practice and Procedure, part 201, subparts A through E (19 CFR part 201), and part 207, subparts A, D, E, and F (19 CFR part 207).

DATES: *Effective Date:* October 6, 2008.

FOR FURTHER INFORMATION CONTACT: Olympia DeRosa Hand (202–205–3182), Office of Investigations, U.S. International Trade Commission, 500 E Street, SW., Washington, DC 20436. Hearing-impaired persons can obtain information on this matter by contacting the Commission's TDD terminal on 202–205–1810. Persons with mobility impairments who will need special assistance in gaining access to the Commission should contact the Office of the Secretary at 202–205–2000. General information concerning the Commission may also be obtained by accessing its Internet server (*http://www.usitc.gov*). The public record for this review may be viewed on the Commission's electronic docket (EDIS) at *http://edis.usitc.gov.*

SUPPLEMENTARY INFORMATION:

Background.—On October 6, 2008, the Commission determined that the domestic interested party group response to its notice of institution (73 FR 37489, July 1, 2008) of the subject five-year review was adequate and that the respondent interested party group response was inadequate. The Commission did not find any other circumstances that would warrant conducting a full review.[1] Accordingly, the Commission determined that it would conduct an expedited review pursuant to section 751(c)(3) of the Act.

Staff report.—A staff report containing information concerning the subject matter of the review will be placed in the nonpublic record on October 30, 2008, and made available to persons on the Administrative Protective Order service list for this review. A public version will be issued thereafter, pursuant to section 207.62(d)(4) of the Commission's rules.

Written submissions.—As provided in section 207.62(d) of the Commission's rules, interested parties that are parties to the review and that have provided individually adequate responses to the notice of institution,[2] and any party other than an interested party to the review, may file written comments with the Secretary on what determination the Commission should reach in the review. Comments are due on or before

[1] A record of the Commissioners' votes, the Commission's statement on adequacy, and any individual Commissioner's statements will be available from the Office of the Secretary and at the Commission's Web site.

[2] The Commission has found the responses submitted by the Crawfish Processors Alliance to be individually adequate. Comments from other interested parties will not be accepted (*see* 19 CFR 207.62(d)(2)).

November 5, 2008 and may not contain new factual information. Any person who is neither a party to the five-year review nor an interested party may submit a brief written statement (which shall not contain any new factual information) pertinent to the review by November 5, 2008. However, should the Department of Commerce extend the time limit for its completion of the final results of its review, the deadline for comments (which may not contain new factual information) on Commerce's final results is three business days after the issuance of Commerce's results. If comments contain business proprietary information (BPI), they must conform with the requirements of sections 201.6, 207.3, and 207.7 of the Commission's rules. The Commission's rules do not authorize filing of submissions with the Secretary by facsimile or electronic means, except to the extent permitted by section 201.8 of the Commission's rules, as amended, 67 FR 68036 (November 8, 2002). Even where electronic filing of a document is permitted, certain documents must also be filed in paper form, as specified in section II (C) of the Commission's Handbook on Electronic Filing Procedures, 67 FR 68168, 68173 (November 8, 2002).

In accordance with sections 201.16(c) and 207.3 of the rules, each document filed by a party to the review must be served on all other parties to the review (as identified by either the public or BPI service list), and a certificate of service must be timely filed. The Secretary will not accept a document for filing without a certificate of service.

Authority: This review is being conducted under authority of title VII of the Tariff Act of 1930; this notice is published pursuant to section 207.62 of the Commission's rules.

By order of the Commission.

Issued: October 14, 2008.

Marilyn R. Abbott,

Secretary to the Commission.

[FR Doc. E8–24891 Filed 10–17–08; 8:45 am]

BILLING CODE 7020–02–P

DEPARTMENT OF LABOR

Office of the Secretary

Proposed Collection of Information; Comment Request

ACTION: Notice of an opportunity for public comment.

SUMMARY: The Department of Labor, as part of its continuing effort to reduce paperwork and respondent burden, conducts a pre-clearance consultation program to provide the general public and Federal agencies with an opportunity to comment on proposed and/or continuing collections of information in accordance with the Paperwork Reduction Act of 1995 (PRA) [44 U.S.C. 3505(c)(2)(A)]. The program helps to ensure that requested data can be provided in the desired format, reporting burden (time and financial resources) is minimized, collection instruments are clearly understood, and the impact of the collection requirements on respondents can be properly assessed.

DATES: Written comments must be submitted by December 12, 2008.

ADDRESSES: A copy of the ICR and supporting documentation as submitted to the Office of Management and Budget (OMB) can be obtained by contacting the Department of Labor. To obtain copies, contact Amy Hobby on 202–693–4553 (this is not a toll-free number) or e-mail: *hobby.amy@dol.gov*. Send comments regarding this proposed collection of information, including suggestions for reducing the burden to the U.S. Department of Labor, GovBenefits Office, FPB, Room N–4309, Washington, DC 20210.

SUPPLEMENTARY INFORMATION:

I. Background

The President's Management Agenda for E-Government (February 27, 2002) sets forth a strategy for simplifying the delivery of services to citizens. The President's agenda outlines a Federal EGovernment Enterprise Architecture that will transition the management and delivery of government services from a bureaucracy-centered to a citizen centered paradigm. To this end, the Department of Labor serves as the managing partner of the Administration's ''GovBenefits'' strategy for assisting citizens in identifying and locating information on benefits sponsored by the Federal government and State governments. This tool will greatly reduce the burden on citizens attempting to locate services available from many different government agencies by providing one-stop access to information on obtaining those services. Respondents answer a series of questions to the extent necessary for locating relevant information on Federal benefits. Responses are used by the respondent to expedite the identification and retrieval of sought after information and resources pertaining to the benefits sponsored by the Federal government.

II. Current Action

Pursuant to the PRA implementing regulations at 5 CFR 1320.8(d)(1), this notice requests comments on the proposed information collection request discussed above in the Background section of this notice. OMB approval for this collection of information is currently scheduled to expire on January 31, 2009. This notice requests extended approval from OMB for the collection of information required for locating information on the GovBenefits Web site. Interested parties are encouraged to provide comments to the individual listed in the **ADDRESSES** section above.

III. Desired Focus of Comments

The Department is particularly interested in comments which:

- Evaluate whether the proposed collection of information is necessary for the proper performance of the functions of the agency, including whether the information will have practical utility;
- Evaluate the accuracy of the agency's estimate of the burden of the proposed collection of information, including the validity of the methodology and assumptions used;
- Enhance the quality, utility, and clarity of the information to be collected; and
- Minimize the burden of the collection of information on those who are to respond, including through the use of appropriate automated, electronic, mechanical, or other technological collection techniques or other forms of information technology, e.g., permitting electronic submission of responses.

Agency: Office of the Secretary.

Type of Review: Revision of an existing OMB Control 1290–0003.

Title of Collection: Information Collection Plan for GovBenefits.

OMB Control Number: 1290–0003.

Affected Public: Individuals or households, not for-profit institutions.

Estimated Number of Respondents: 6,345,715.

Frequency: On occasion.

Total Estimated Annual Responses: 6,345,715.

Estimated Average Time per Response: 5.5 minutes.

Estimated Total Annual Burden Hours: 581,691 hours.

Total Estimated Annual Cost Burden: $0.

Comments submitted in response to this notice will be summarized and may be included in the request for OMB approval of the final information collection request. The comments will become a matter of public record.

Signed at Washington, DC, this 14th day of October, 2008.

Edward C. Hugler,

Deputy Assistant Secretary for Administration and Management.

[FR Doc. E8–24787 Filed 10–17–08; 8:45 am]

BILLING CODE 4510–23–P

DEPARTMENT OF LABOR

Office of Job Corps

Advisory Committee on Job Corps; Meeting

AGENCY: Office of Job Corps.

ACTION: Notice of Advisory Committee meeting.

SUMMARY: On August 22, 2006, the Advisory Committee on Job Corps (ACJC) was established in accordance with the provisions of the Workforce Investment Act and the Federal Advisory Committee Act. The Committee was established to advance Job Corps' new vision for student achievement aimed at 21st century high-growth employment. This Committee will also evaluate Job Corps program characteristics, including its purpose, goals, and effectiveness, efficiency, and performance measures in order to address the critical issues facing the provision of job training and education to the youth population that it serves. The Committee may provide other advice and recommendations with regard to identifying and overcoming problems, planning program or center development or strengthening relations between Job Corps and agencies, institutions, or groups engaged in related activities.

DATES: The meeting will be held on November 5–6, 2008 from 12 noon to 4 p.m. on November 5 and from 8 a.m. to 4 p.m. on November 6. The Committee will be discussing the draft recommendations of its two subcommittees—subcommittee on facilities and subcommittee on safety and security.

ADDRESSES: The Advisory Committee meeting will be held at the Westin Arlington Gateway, 801 North Glebe Road, Arlington, Virginia 22203, *Telephone:* (703) 717–6200.

FOR FURTHER INFORMATION CONTACT: Crystal Woodard, Office of Job Corps, 202–693–3000 (this is not a toll-free number).

SUPPLEMENTARY INFORMATION: On August 22, 2006 the Advisory Committee on Job Corps (71 FR 48949) was established in accordance with the provisions of the Workforce Investment Act, and the Federal Advisory Committee Act. The Committee was established to advance Job Corps' new vision for student achievement aimed at 21st century high-growth employment. This Committee will also evaluate Job Corps program characteristics, including its purpose, goals, and effectiveness, efficiency, and performance measures in order to address the critical issues facing the provision of job training and education to the youth population that it serves. The Committee may provide other advice and recommendations with regard to identifying and overcoming problems, planning program or center development or strengthening relations between Job Corps and agencies, institutions, or groups engaged in related activities.

Agenda: The agenda for the meeting will be a discussion of the draft recommendations of the Committee's two subcommittees—subcommittee on facilities and subcommittee on safety and security.

Public Participation: The meeting will be open to the public. Seating will be available to the public on a first-come first-served basis. Seats will be reserved for the media. Individuals with disabilities should contact the Job Corps official listed above, if special accommodations are needed.

Signed at Washington, DC, this 14th day of October 2008.

Esther R. Johnson,

Administrator, Office of Job Corps.

[FR Doc. E8–24758 Filed 10–17–08; 8:45 am]

BILLING CODE 4510–23–P

DEPARTMENT OF LABOR

Employee Benefits Security Administration

Advisory Council on Employee Welfare and Pension Benefit Plans; Notice of Meeting

Pursuant to the authority contained in Section 512 of the Employee Retirement Income Security Act of 1974 (ERISA), 29 U.S.C. 1142, the 144th open meeting of the full Advisory Council on Employee Welfare and Pension Benefit Plans will be held on November 6, 2008.

The meeting will run from 9:30 a.m. to approximately 4:30 p.m., with a break for lunch. The morning session will take place in C5515, Room 3, U.S. Department of Labor, 200 Constitution Avenue, NW., Washington, DC 20210. The afternoon session will take place in Room S–2508 at the same address. The purpose of the open meeting is for the chairpersons of the three Advisory Council Working Groups to submit their findings and recommendations on their individual study topics for the full Advisory Council's review, acceptance, and presentation to the Secretary of Labor.

In addition, the Working Groups assigned by the Advisory Council to study the issues of (1) The ''spend down'' of retirement assets, (2), phased retirement, and (3) hard to value assets/target date funds, will hold a public meeting on November 5, 2008. The meeting will take place in C5515, Room 3, U.S. Department of Labor, 200 Constitution Avenue, NW., Washington, DC 20210. The purpose of the open meeting on November 5, which will start at 1 p.m., is for Working Group members to discuss their recommendations for the reports to be presented by the Advisory Council to the Secretary.

Organizations or members of the public wishing to submit a written statement for any of the meetings may do so by submitting 30 copies on or before October 29, 2008 to Larry Good, Executive Secretary, ERISA Advisory Council, U.S. Department of Labor, Suite N–5623, 200 Constitution Avenue, NW., Washington, DC 20210. Statements also may be submitted electronically to *good.larry@dol.gov.* Statements received on or before October 29 will be included in the record of the relevant meeting. Individuals or representatives of organizations wishing to address the Advisory Council should forward their request to the Executive Secretary by October 29 at the above address or via telephone at (202) 693–8668. Oral presentations will be limited to 10 minutes, time permitting, but an extended statement may be submitted for the record. Individuals with disabilities who need special accommodations should contact Larry Good by October 29 at the address indicated in this notice.

Signed at Washington, DC.

This 14th day of October, 2008.

Bradford P. Campbell,

Assistant Secretary, Employee Benefits Security Administration.

[FR Doc. E8–24765 Filed 10–17–08; 8:45 am]

BILLING CODE 4510–29–P

DEPARTMENT OF LABOR

Employment and Training Administration

[TA–W–63,793]

General Motors Corporation, Vehicle Manufacturing Division, Shreveport Assembly Plant, Including On-Site Leased Workers From Developmental Dimensions International and Premier Manufacturing Support Services, Shreveport, LA; Amended Certification Regarding Eligibility To Apply for Worker Adjustment Assistance and Alternative Trade Adjustment Assistance

In accordance with Section 223 of the Trade Act of 1974 (19 U.S.C. 2273), and Section 246 of the Trade Act of 1974 (26 U.S.C. 2813), as amended, the Department of Labor issued a Certification of Eligibility to Apply for Worker Adjustment Assistance and Alternative Trade Adjustment Assistance on August 27, 2008, applicable to workers of General Motors Corporation, Vehicle Manufacturing Division, Shreveport Assembly Plant, including on-site leased workers of Developmental Dimensions International, Shreveport, Louisiana. The notice was published in the **Federal Register** on September 12, 2008 (73 FR 53045).

At the request of the State agency, the Department reviewed the certification for workers of the subject firm. The workers assemble Chevrolet Colorado, GMC Canyon and Hummer H3 vehicles.

New information shows that leased workers of Premier Manufacturing Support Services were employed on-site at the Shreveport Assembly Plant, Shreveport, Louisiana location of General Motors, Vehicle Manufacturing Division.

The Department has determined that these workers were sufficiently under the control of the subject firm to be considered leased workers.

Based on these findings, the Department is amending this certification to include leased workers of Premier Manufacturing Support Services working on-site at the Shreveport Assembly Plant, Shreveport, Louisiana location of the subject firm.

The intent of the Department's certification is to include all workers employed at General Motors Corporation, Vehicle Manufacturing Division, Shreveport Assembly Plant, Shreveport, Louisiana who were adversely affected by increased imports of Chevrolet Colorado, GMC Canyon and Hummer H3 vehicles.

The amended notice applicable to TA–W–63,793 is hereby issued as follows:

All workers of General Motors Corporation, Vehicle Manufacturing Division, Shreveport Assembly Plant, including on-site leased workers from Developmental Dimensions International and Premier Manufacturing Support Services, Shreveport, Louisiana, who became totally or partially separated from employment on or after August 1, 2007, through August 27, 2010, are eligible to apply for adjustment assistance under Section 223 of the Trade Act of 1974, and are also eligible to apply for alternative trade adjustment assistance under Section 246 of the Trade Act of 1974.

Signed at Washington, DC, this 9th day of October 2008.

Richard Church,

Certifying Officer, Division of Trade Adjustment Assistance.

[FR Doc. E8–24863 Filed 10–17–08; 8:45 am]

BILLING CODE 4510–FN–P

DEPARTMENT OF LABOR

Employment and Training Administration

[TA–W–61,285]

Metrologic Instruments A Business Unit of Honeywell International Corporate Division Blackwood, NJ; Amended Certification Regarding Eligibility To Apply for Worker Adjustment Assistance and Alternative Trade Adjustment Assistance

In accordance with section 223 of the Trade Act of 1974 (19 U.S.C. 2273), and section 246 of the Trade Act of 1974 (26 U.S.C. 2813), as amended, the Department of Labor issued a Certification Regarding Eligibility to Apply for Worker Adjustment Assistance and Alternative Trade Adjustment Assistance on May 14, 2007, applicable to workers of Metrologic Instruments Corporate Division, Blackwood, New Jersey. The notice was published in the **Federal Register** on June 6, 2007 (72 FR 31345).

At the request of a company official, the Department reviewed the certification for workers of the subject firm. The workers are engaged in the production of bar code scanners/imagers.

New information shows that on July 2, 2008, Honeywell International purchased Metrologic Instruments, Corporate Division, Blackwood, New Jersey and is currently known as Metrologic Instruments, A Business Unit of Honeywell International, Corporate Division, Blackwood, New Jersey.

Workers wages at the subject firm are being reported under two Unemployment Insurance (UI) tax accounts; Metrologic Instruments through the end of 2008 and will be paid through Honeywell International beginning in January 2009.

Accordingly, the Department is amending this certification to properly reflect this matter.

The amended notice applicable to TA-W–61,285 is hereby issued as follows:

''All workers of Metrologic Instruments, A Business Unit of Honeywell International, Corporate Division, Blackwood, New Jersey, who became totally or partially separated from employment on or after April 10, 2006, through May 14, 2009, are eligible to apply for adjustment assistance under Section 223 of the Trade Act of 1974, and are also eligible to apply for alternative trade adjustment assistance under Section 246 of the Trade Act of 1974.''

Signed at Washington, DC this 8th day of October 2008.

Linda G. Poole,

Certifying Officer, Division of Trade Adjustment Assistance.

[FR Doc. E8–24861 Filed 10–17–08; 8:45 am]

BILLING CODE 4510–FN–P

DEPARTMENT OF LABOR

Employment and Training Administration

Notice of Determinations Regarding Eligibility To Apply for Worker Adjustment Assistance and Alternative Trade Adjustment Assistance

In accordance with Section 223 of the Trade Act of 1974, as amended (19 U.S.C. 2273) the Department of Labor herein presents summaries of determinations regarding eligibility to apply for trade adjustment assistance for workers (TA–W) number and alternative trade adjustment assistance (ATAA) by (TA–W) number issued during the period of September 29 through October 3, 2008.

In order for an affirmative determination to be made for workers of a primary firm and a certification issued regarding eligibility to apply for worker adjustment assistance, each of the group eligibility requirements of Section 222(a) of the Act must be met.

I. Section (a)(2)(A) all of the following must be satisfied:

A. A significant number or proportion of the workers in such workers' firm, or an appropriate subdivision of the firm, have become totally or partially separated, or are threatened to become totally or partially separated;

B. the sales or production, or both, of such firm or subdivision have decreased absolutely; and

C. increased imports of articles like or directly competitive with articles produced by such firm or subdivision have contributed importantly to such workers' separation or threat of separation and to the decline in sales or production of such firm or subdivision; or

II. Section (a)(2)(B) both of the following must be satisfied:

A. A significant number or proportion of the workers in such workers' firm, or an appropriate subdivision of the firm, have become totally or partially separated, or are threatened to become totally or partially separated;

B. there has been a shift in production by such workers' firm or subdivision to a foreign country of articles like or directly competitive with articles which are produced by such firm or subdivision; and

C. One of the following must be satisfied:

1. The country to which the workers' firm has shifted production of the articles is a party to a free trade agreement with the United States;

2. the country to which the workers' firm has shifted production of the articles to a beneficiary country under the Andean Trade Preference Act, African Growth and Opportunity Act, or the Caribbean Basin Economic Recovery Act; or

3. there has been or is likely to be an increase in imports of articles that are like or directly competitive with articles which are or were produced by such firm or subdivision.

Also, in order for an affirmative determination to be made for secondarily affected workers of a firm and a certification issued regarding eligibility to apply for worker adjustment assistance, each of the group eligibility requirements of Section 222(b) of the Act must be met.

(1) Significant number or proportion of the workers in the workers' firm or an appropriate subdivision of the firm have become totally or partially separated, or are threatened to become totally or partially separated;

(2) the workers' firm (or subdivision) is a supplier or downstream producer to a firm (or subdivision) that employed a group of workers who received a certification of eligibility to apply for trade adjustment assistance benefits and such supply or production is related to the article that was the basis for such certification; and

(3) either—

(A) the workers' firm is a supplier and the component parts it supplied for the firm (or subdivision) described in paragraph (2) accounted for at least 20 percent of the production or sales of the workers' firm; or

(B) a loss or business by the workers' firm with the firm (or subdivision) described in paragraph (2) contributed importantly to the workers' separation or threat of separation.

In order for the Division of Trade Adjustment Assistance to issue a certification of eligibility to apply for Alternative Trade Adjustment Assistance (ATAA) for older workers, the group eligibility requirements of Section 246(a)(3)(A)(ii) of the Trade Act must be met.

1. Whether a significant number of workers in the workers' firm are 50 years of age or older.

2. Whether the workers in the workers' firm possess skills that are not easily transferable.

3. The competitive conditions within the workers' industry (i.e., conditions within the industry are adverse).

Affirmative Determinations for Worker Adjustment Assistance

The following certifications have been issued. The date following the company name and location of each determination references the impact date for all workers of such determination.

The following certifications have been issued. The requirements of Section 222(a)(2)(A) (increased imports) of the Trade Act have been met.

TA–W–63,908; Becker, Inc., Kenosha, WI: August 20, 2007.

The following certifications have been issued. The requirements of Section 222(a)(2)(B) (shift in production) of the Trade Act have been met.

None.

The following certifications have been issued. The requirements of Section 222(b) (supplier to a firm whose workers are certified eligible to apply for TAA) of the Trade Act have been met.

TA–W–64,028; Edinboro Molding, Inc., Edinboro, PA: September 10, 2007.

TA–W–64,048; Rieter Automotive North America, Carpet, Including Workers of Career Adventures, Shreveport, LA: September 12, 2007.

The following certifications have been issued. The requirements of Section 222(b) (downstream producer for a firm whose workers are certified eligible to apply for TAA based on increased imports from or a shift in production to Mexico or Canada) of the Trade Act have been met.

None.

Affirmative Determinations for Worker Adjustment Assistance and Alternative Trade Adjustment Assistance

The following certifications have been issued. The date following the company name and location of each determination references the impact date for all workers of such determination.

The following certifications have been issued. The requirements of Section 222(a)(2)(A) (increased imports) and Section 246(a)(3)(A)(ii) of the Trade Act have been met.

TA–W–64,086; Pope and Talbot, Inc., Corporate Headquarters, Portland, OR: September 19, 2007.

TA–W–63,598; Bemcore Tool, Inc., Dayton, OH: June 20, 2007.

TA–W–63,768; Zagaroli Classics, Inc., Hickory, NC: July 28, 2007.

TA–W–64,047; Shreveport Logistics, Small Business Interchange, Shreveport, LA: September 12, 2007.

The following certifications have been issued. The requirements of Section 222(a)(2)(B) (shift in production) and Section 246(a)(3)(A)(ii) of the Trade Act have been met.

TA–W–63,915; Ingersoll Rand, Thermo King Division, Sheet Metal Department, Arecibo, PR: August 13, 2007.

TA–W–63,990; Whirlpool Corporation, Oxford Division, Oxford, MS: September 4, 2007.

TA–W–64,008; Calsonic Kansei North America, Inc., California Operations Tubes/Hoses Division, Workers of Randstad, Irvine, CA: September 8, 2007.

TA–W–64,085; Whirlpool Corporation, Fort Smith, Arkansas Division, Fort Smith, AR: July 29, 2008.

TA–W–63,862; SPX Corporation, Cleveland, OH: August 12, 2007.

TA–W–63,913; Five Rivers Electronic Innovations, LLC, Greeneville, TN: August 19, 2007.

TA–W–63,966; Honeywell International, Inc., Friction Materials Division, Elberton, GA: August 27, 2007.

TA–W–64,007; LexisNexis, Dayton, OH: September 5, 2007.

TA–W–64,013; Saia Burgess Automotive, Inc., Leased Workers of Aerotek and Westaff, Cary, NC: September 9, 2007.

TA–W–64,019; Whittier Wood Products Company, Eugene, OR: October 20, 2008.

TA–W–64,056; Remy International, Inc. Co., World Wide Automotive, Winchester, VA: September 11, 2007.

The following certifications have been issued. The requirements of Section

222(b) (supplier to a firm whose workers are certified eligible to apply for TAA) and Section 246(a)(3)(A)(ii) of the Trade Act have been met.

TA–W–64,041; A.G. Simpson (USA), Inc., Leased Workers from Career Adventures, Shreveport, LA: September 12, 2007.

TA–W–64,042; Grupo Antolin LA, Inc., Grupo Antolin-Irausa, Career Adventures, Shreveport, LA: September 12, 2007.

TA–W–64,050; Ventra St. Louis LLC, Flex N Gate, Pacific, MO: September 12, 2007.

The following certifications have been issued. The requirements of Section 222(b) (downstream producer for a firm whose workers are certified eligible to apply for TAA based on increased imports from or a shift in production to Mexico or Canada) and Section 246(a)(3)(A)(ii) of the Trade Act have been met.

None.

Negative Determinations for Alternative Trade Adjustment Assistance

In the following cases, it has been determined that the requirements of 246(a)(3)(A)(ii) have not been met for the reasons specified.

The Department has determined that criterion (1) of Section 246 has not been met. The firm does not have a significant number of workers 50 years of age or older.

TA–W–64,028; Edinboro Molding, Inc., Edinboro, PA.

The Department has determined that criterion (2) of Section 246 has not been met. Workers at the firm possess skills that are easily transferable.

TA–W–63,908; Becker, Inc., Kenosha, WI.

TA–W–64,048; Rieter Automotive North America, Carpet, Including Workers of Career Adventures, Shreveport, LA.

The Department has determined that criterion (3) of Section 246 has not been met. Competition conditions within the workers' industry are not adverse.

None.

Negative Determinations for Worker Adjustment Assistance and Alternative Trade Adjustment Assistance

In the following cases, the investigation revealed that the eligibility criteria for worker adjustment assistance have not been met for the reasons specified.

Because the workers of the firm are not eligible to apply for TAA, the workers cannot be certified eligible for ATAA.

The investigation revealed that criteria (a)(2)(A)(I.A.) and (a)(2)(B)(II.A.) (employment decline) have not been met.

TA–W–64,009; Rexnord Industries, LLC, A Subsidiary of Rexnord Corp., West Milwaukee, WI.

The investigation revealed that criteria (a)(2)(A)(I.B.) (Sales or production, or both, did not decline) and (a)(2)(B)(II.B.) (shift in production to a foreign country) have not been met.

None.

The investigation revealed that criteria (a)(2)(A)(I.C.) (increased imports) and (a)(2)(B)(II.B.) (shift in production to a foreign country) have not been met.

TA–W–63,920; Sealy Mattress Company, Clarion, PA.

TA–W–63,924A; Boise Cascade, LLC, Wood Products Division, LA Grande Particleboard, La Grande, OR.

TA–W–63,924; Boise Cascade, LLC, Wood Products Division, LA Grande Lumber Mill, La Grande, OR.

TA–W–64,088; Rexam Closures Systems, Inc., Bowling Green, OH.

TA–W–63,918; Atlantic Wire Company, LLC, Branford, CT.

The workers' firm does not produce an article as required for certification under Section 222 of the Trade Act of 1974.

TA–W–63,848; Capgemini America, Inc., Kansas City Service Center, Lee's Summit, MO.

TA–W–64,005; Havells Sylvania d/b/a SLI Lighting Products, Inc., U.S. Distribution Division, Mullins, SC.

TA–W–64,025; Rail Terminal Service, Dupo, IL.

The investigation revealed that criteria of Section 222(b)(2) has not been met. The workers' firm (or subdivision) is not a supplier to or a downstream producer for a firm whose workers were certified eligible to apply for TAA.

None.

I hereby certify that the aforementioned determinations were issued during the period of September 29 through October 3, 2008. Copies of these determinations are available for inspection in Room C–5311, U.S. Department of Labor, 200 Constitution Avenue, NW., Washington, DC 20210 during normal business hours or will be mailed to persons who write to the above address.

Dated: October 14, 2008.

Erin Fitzgerald,

Director, Division of Trade Adjustment Assistance.

[FR Doc. E8–24860 Filed 10–17–08; 8:45 am]

BILLING CODE 4510–FN–P

DEPARTMENT OF LABOR

Employment and Training Administration

Investigations Regarding Certifications of Eligibility To Apply for Worker Adjustment Assistance and Alternative Trade Adjustment Assistance

Petitions have been filed with the Secretary of Labor under Section 221(a) of the Trade Act of 1974 (''the Act'') and are identified in the Appendix to this notice. Upon receipt of these petitions, the Director of the Division of Trade Adjustment Assistance, Employment and Training Administration, has instituted investigations pursuant to Section 221(a) of the Act.

The purpose of each of the investigations is to determine whether the workers are eligible to apply for adjustment assistance under Title II, Chapter 2, of the Act. The investigations will further relate, as appropriate, to the determination of the date on which total or partial separations began or threatened to begin and the subdivision of the firm involved.

The petitioners or any other persons showing a substantial interest in the subject matter of the investigations may request a public hearing, provided such request is filed in writing with the Director, Division of Trade Adjustment Assistance, at the address shown below, not later than October 30, 2008.

Interested persons are invited to submit written comments regarding the subject matter of the investigations to the Director, Division of Trade Adjustment Assistance, at the address shown below, not later than October 30, 2008.

The petitions filed in this case are available for inspection at the Office of the Director, Division of Trade Adjustment Assistance, Employment and Training Administration, U.S. Department of Labor, Room C–5311, 200 Constitution Avenue, NW., Washington, DC 20210.

Signed at Washington, DC, this 8th day of October 2008.

Erin Fitzgerald,

Director, Division of Trade Adjustment Assistance.

APPENDIX—TAA PETITIONS INSTITUTED BETWEEN 9/29/08 AND 10/3/08

TA–W	Subject Firm (Petitioners)	Location	Date of institution	Date of petition
64124	Certified Metal Finishing (Wkrs)	Benton Harbor, MI	09/29/08	09/25/08
64125	GE Healthcare Bioscience BioProess Corp. (Comp)	Somerset, NJ	09/29/08	09/26/08
64126	Netshape Technologies (Comp)	Falls Creek, PA	09/29/08	09/10/08
64127	Hewlett-Packard, Imaging and Printing Group (Comp)	Vancouver, WA	09/29/08	09/26/08
64128	Biomet (Wkrs)	Parsippany, NJ	09/29/08	09/25/08
64129	Broyhill Furniture Industries, Inc., Plant #5 (Wkrs)	Taylorsville, NC	09/29/08	09/26/08
64130	Sears Holdings (Wkrs)	Columbus, OH	09/29/08	09/24/08
64131	A.H. Schreiber Company (Comp)	Bristol, TN	09/29/08	09/26/08
64132	JDSU SW Data Com Product (State)	Louisville, CO	09/30/08	09/26/08
64133	Cencorp, LLC (Comp)	Boulder, CO	09/30/08	09/29/08
64134	Diebold (IUECWA)	Hebron, OH	09/30/08	09/29/08
64135	Panasonic Electronic Devices Corporation of America (Comp).	Knoxville, TN	09/30/08	09/29/08
64136	Magna Power Train, Inc. (Wkrs)	Sterling Heights, MI	09/30/08	09/08/08
64137	Electro Scientific Industries, Inc. (State)	Portland, OR	09/30/08	09/22/08
64138	Premier Manufacturing Support Services (State)	Shreveport, LA	09/30/08	09/29/08
64139	Fitrona Greensboro, Inc. (Comp)	Greensboro, NC	09/30/08	09/29/08
64140	Wellman, Inc. (Comp)	Johnsonville, SC	09/30/08	09/22/08
64141	Microplane (State)	Russellville, AR	10/01/08	09/30/08
64142	St. Lawrence Zinc Company, LLC (Wkrs)	Governeur, NY	10/01/08	09/27/08
64143	Universal Manufacturing Corporation (UAW)	Zelienople, PA	10/01/08	09/30/08
64144	B & S Hosiery (Comp)	Sylvania, AL	10/01/08	09/29/08
64145	Flakeboard America (State)	Simsboro, LA	10/01/08	09/29/08
64146	Angelo DiMaria, Inc. (Comp)	Providence, RI	10/01/08	09/30/08
64147	Mahle Engine Components USA, Inc. (Comp)	Muskegon, MI	10/01/08	09/30/08
64148	Telect Liberty Lake (Comp)	Liberty Lake, WA	10/01/08	09/22/08
64149	Sanmina-SCI Corporation (Comp)	Pleasant Prairie, WI	10/02/08	10/01/08
64150	Andritz, Inc. (Wkrs)	Muncy, PA	10/02/08	10/01/08
64151	Casey Tool and Machine (State)	Casey, IL	10/02/08	09/30/08
64152	McClatchy Newspapers/The Sacramento Bee (Wkrs)	Sacramento, CA	10/02/08	09/22/08
64153	Thorngate Ltd (UNITE)	Cape Girardeau, MO	10/02/08	09/30/08
64154	Hewlett Packard Company (State)	Corvallis, OR	10/02/08	09/30/08
64155	Window Fashions, Inc. (Wkrs)	Pittsburgh, PA	10/02/08	10/01/08
64156	Boise Cascade (Wkrs)	Kettle Falls, WA	10/02/08	10/01/08
64157	Ben Mar Hosiery (State)	Fort Payne, AL	10/02/08	09/30/08
64158	Metaldyne (UAW)	New Castle, IN	10/02/08	10/01/08
64159	Panasonic Automotive Systems Co of America (Comp)	Peachtree City, GA	10/02/08	09/22/08
64160	Boise Cascade, LLC (AFLCIO)	St. Helens, OR	10/03/08	10/02/08
64161	Titus Tool Co., Inc. (Comp)	Kent, WA	10/03/08	10/01/08
64162	Rock Tenn Company (Comp)	Baltimore, MD	10/03/08	09/22/08
64163	Barnes Aerospace (State)	Windsor, CT	10/03/08	10/02/08
64164	Veka Innovations dba Vinyl Source (Comp)	Youngstown, OH	10/03/08	09/30/08

[FR Doc. E8–24859 Filed 10–17–08; 8:45 am]
BILLING CODE 4510–FN–P

DEPARTMENT OF LABOR

Employment and Training Administration

[TA–W–63,130]

Sea Gull Lighting Products, Riverside, NJ; Notice of Revised Determination on Reconsideration

On September 5, 2008, the Department issued an Affirmative Determination Regarding Application on Reconsideration applicable to workers and former workers of the subject firm. The notice was published in the **Federal Register** on September 18, 2008 (73 FR 54171).

The previous investigation initiated on April 4, 2008, and resulted in a negative determination issued on July 28, 2008, was based on the finding that imports of residential lighting fixtures did not contribute importantly to worker separations at the subject firm and no shift in production to a foreign source occurred. The denial notice was published in the **Federal Register** on August 12, 2008 (73 FR 46924).

In the request for reconsideration, the petitioner provided additional information regarding the subject firm's domestic production of residential lighting fixtures and imports of these products by the subject firm into the United States.

The Department contacted the company official to verify whether the subject firm imported residential lighting fixtures in 2006, 2007 and January through March 2008. The investigation on reconsideration revealed that the subject firm increased their reliance on imported residential lighting fixtures during the relevant period. It was also revealed that employment and sales of residential lighting fixtures declined at Sea Gull Lighting Products LLC, Riverside, New Jersey during the relevant period.

In accordance with Section 246 the Trade Act of 1974 (26 U.S.C. 2813), as amended, the Department of Labor herein presents the results of its investigation regarding certification of eligibility to apply for alternative trade adjustment assistance (ATAA) for older workers.

In order for the Department to issue a certification of eligibility to apply for ATAA, the group eligibility requirements of Section 246 of the Trade Act must be met. The Department has determined in this case that the requirements of Section 246 have been met.

A significant number of workers at the firm are age 50 or over and possess skills that are not easily transferable. Competitive conditions within the industry are adverse.

Conclusion

After careful review of the additional facts obtained on reconsideration, I determine that increased reliance on imports of residential lighting fixtures, produced by Sea Gull Lighting Products, LLC, Riverside, New Jersey contributed importantly to the total or partial separation of workers and to the decline in sales or production at that firm or subdivision. In accordance with the provisions of the Act, I make the following certification:

''All workers of Sea Gull Lighting Products LLC, Riverside, New Jersey, who became totally or partially separated from employment on or after April 3, 2007, through two years from the date of this certification, are eligible to apply for adjustment assistance under Section 223 of the Trade Act of 1974, and are eligible to apply for alternative trade adjustment assistance under Section 246 of the Trade Act of 1974.''

Signed in Washington, DC this 6th day of October 2008.

Elliott S. Kushner,

Certifying Officer, Division of Trade Adjustment Assistance.

[FR Doc. E8–24862 Filed 10–17–08; 8:45 am]

BILLING CODE 4510–FN–P

DEPARTMENT OF LABOR

Employment & Training Administration

[SGA/DFA–PY–08–02]

Solicitation for Grant Applications (SGA); Community-Based Job Training Grants

AGENCY: Employment and Training Administration (ETA, Labor).

ACTION: Notice: Amendment to SGA/DFA-PY–08–02.

SUMMARY: The Employment and Training Administration published a document in the **Federal Register** on October 10, 2008, announcing the availability of funds and solicitation for grant applications (SGA) for Community-Based Job Training Grants to be awarded through a competitive process. This notice is the first amendment to the SGA and it amends the date for the Virtual Prospective Applicant conference that will be posted on ETA's Web site at *http://www.doleta.gov/business/Community-BasedJob TrainingGrants.cfm.*

Supplemental Information Correction: The Virtual Prospective Applicant Conference has been changed from Friday, October 24, 2008 at 1 p.m. Eastern Time to Tuesday, October 28, 2008 at 1 p.m. Eastern Time.

FOR FURTHER INFORMATION CONTACT: Chari Magruder, Grant Officer, Division of Federal Assistance, at (202) 693–3313.

DATES: *Effective Date:* This notice is effective October 20, 2008.

Signed at Washington, DC this 10th day of October, 2008.

Chari A. Magruder,

Grant Officer.

[FR Doc. E8–24867 Filed 10–17–08; 8:45 am]

BILLING CODE 4510–30–P

DEPARTMENT OF LABOR

Employment and Training Administration

[TA–W–63,874]

Northern Technologies, Spokane Valley, WA; Notice of Termination of Investigation

In accordance with Section 221 of the Trade Act of 1974, as amended, an investigation was initiated on August 14, 2008 in response to a petition filed by a company official on behalf of workers of Northern Technologies, Inc., Spokane Valley, Washington.

The petitioner has requested that the petition be withdrawn. Consequently, the investigation has been terminated.

Signed in Washington, DC, this 8th day of October 2008.

Richard Church,

Certifying Officer, Division of Trade Adjustment Assistance.

[FR Doc. E8–24864 Filed 10–17–08; 8:45 am]

BILLING CODE 4510–FN–P

DEPARTMENT OF LABOR

Employment and Training Administration

[TA–W–64,138]

Premier Manufacturing Support Services, Shreveport, LA; Notice of Termination of Investigation

Pursuant to Section 221 of the Trade Act of 1974, as amended, an investigation was initiated on September 18, 2008 in response to a petition filed by the State Workforce Office on behalf of workers of Premier Manufacturing Support Services, Shreveport, Louisiana.

The petitioning group of workers is covered by an active certification, (TA–W–63,793) which expires on September 27, 2010. Consequently, further investigation in this case would serve no purpose, and the investigation has been terminated.

Signed at Washington, DC, this 9th day of October, 2008.

Elliott S. Kushner,

Certifying Officer, Division of Trade Adjustment Assistance.

[FR Doc. E8–24866 Filed 10–17–08; 8:45 am]

BILLING CODE 4510–FN–P

DEPARTMENT OF LABOR

Bureau of Labor Statistics

Proposed Collection, Comment Request

ACTION: Notice.

SUMMARY: The Department of Labor, as part of its continuing effort to reduce paperwork and respondent burden, conducts a pre-clearance consultation program to provide the general public and Federal agencies with an opportunity to comment on proposed and/or continuing collections of information, in accordance with the Paperwork Reduction Act of 1995 (PRA95) [44 U.S.C. 3506(c) (2)(A)]. This program helps to ensure that requested data can be provided in the desired format, reporting burden (time and financial resources) is minimized, collection instruments are clearly understood, and the impact of collection requirements on respondents can be properly assessed. The Bureau of Labor Statistics (BLS) is soliciting comments concerning the proposed extension of the ''Job Openings and Labor Turnover Survey.'' A copy of the proposed information collection request (ICR) can be obtained by contacting the individual listed below in the **ADDRESSES** section of this notice.

DATES: Written comments must be submitted to the office listed in the Addresses section below on or before December 19, 2008.

ADDRESSES: Send comments to Carol Rowan, BLS Clearance Officer, Division of Management Systems, Bureau of Labor Statistics, Room 4080, 2 Massachusetts Avenue, NE., Washington, DC 20212, telephone number 202–691–7628. (This is not a toll free number.)

FOR FURTHER INFORMATION CONTACT: Carol Rowan, BLS Clearance Officer, telephone number 202–691–7628. (See **ADDRESSES** section.)

SUPPLEMENTARY INFORMATION:

I. Background

The Job Openings and Labor Turnover Survey (JOLTS) collects data on job vacancies, labor hires, and labor separations. As the monthly JOLTS time series grow longer, their value in assessing the business cycle, the difficulty that employers have in hiring workers, and the extent of the mismatch between the unused supply of available workers and the unmet demand for labor by employers will increase. The study of the complex relationship between job openings and unemployment is of particular interest to researchers. While these two measures are expected to move in opposite directions over the course of the business cycle, their relative levels and movements depend on the efficiency of the labor market in matching workers and jobs.

Along with the job openings rate, trends in hires and separations may broadly identify which aggregate industries face the tightest labor markets. Quits rates, the number of persons who quit during an entire month as a percentage of total employment, may provide clues about workers' views of the labor market or their success in finding better jobs. In addition, businesses will be able to compare their own turnover rates to the national, regional, and major industry division rates.

The BLS uses the JOLTS form to gather employment, job openings, hires, and total separations from business establishments. The information is collected once a month at the BLS Data Collection Center (DCC) in Atlanta, Georgia. The information is collected using Computer Assisted Telephone Interviewing (CATI), Touch-tone Data Entry (TDE), FAX, and e-mail. An establishment is in the sample for 24 consecutive months.

II. Current Action

Office of Management and Budget clearance is being sought for the JOLTS. The BLS is requesting an extension to the existing clearance for the JOLTS. There are no major changes being made to the forms, procedures, data collection methodology, or other aspects of the survey.

III. Desired Focus of Comments

The Bureau of Labor Statistics is particularly interested in comments that:

- Evaluate whether the proposed collection of information is necessary for the proper performance of the functions of the agency, including whether the information will have practical utility.
- Evaluate the accuracy of the agency's estimate of the burden of the proposed collection of information, including the validity of the methodology and assumptions used.
- Enhance the quality, utility, and clarity of the information to be collected.
- Minimize the burden of the collection of information on those who are to respond, through the use of appropriate automated, electronic, mechanical, or other technological collection techniques or other forms of information technology, e.g., permitting electronic submissions of responses.

Type of Review: Extension of a currently approved collection.

Agency: Bureau of Labor Statistics.

Title: Job Openings and Labor Turnover Survey.

OMB Number: 1220–0170.

Affected Public: Federal Government; State, Local, or Tribal governments; Businesses or other for-profit; Not-for-profit institutions; Small businesses and organizations.

Affected public	Total respondents	Frequency	Total responses	Average time per response	Estimated total burden
Private	9,265	Monthly	111,180	10 min.	18,530
State, Local, & Tribal Gov't	1,422	Monthly	17,064	10 min.	2,844
Federal Gov't	401	Monthly	4,812	10 min.	802
Totals	11,088	Monthly	133,056	10 min.	22,176

Total Burden Cost (capital/startup): $0.

Total Burden Cost (operating/maintenance): $0.

Comments submitted in response to this notice will be summarized and/or included in the request for Office of Management and Budget approval of the information collection request; they also will become a matter of public record.

Signed at Washington, DC, this 10th day of October 2008.

Cathy Kazanowski,

Chief, Division of Management Systems, Bureau of Labor Statistics.

[FR Doc. E8–24730 Filed 10–17–08; 8:45 am]

BILLING CODE 4510–24–P

DEPARTMENT OF LABOR

Bureau of Labor Statistics

Agency Information Collection Activities: Proposed Collection; Comment Request; 60-Day Notice of Information Collection Under Review: Cognitive and Psychological Research

ACTION: Notice; correction.

SUMMARY: The Department of Labor, Bureau of Labor Statistics published a notice in the **Federal Register**. Agency Information Collection Activities: Proposed Collection; Comment Request Action: 30-Day Notice of Information Collection Under Review: Cognitive and Psychological Research. The Department is issuing a correction of the comment date, as this should have been published as a 60-day notice.

Correction

This is to correct the comment date in the **Federal Register** of September 22, 2008, Volume 73, Number 184 on page 54623, in section marked **DATES**, to read:

DATES: Written comments must be submitted to the office listed in the **ADDRESSES** section of this notice on or before November 22, 2008.

Signed at Washington, DC, this 10th day of October 2008.

Cathy Kazanowski,

Division of Management Systems, Bureau of Labor Statistics.

[FR Doc. E8–24729 Filed 10–17–08; 8:45 am]

BILLING CODE 4510–24–P

DEPARTMENT OF LABOR

Occupational Safety and Health Administration

[Docket No. OSHA–2008–0032]

Nationally Recognized Testing Laboratories; Supplier's Declaration of Conformity

AGENCY: Occupational Safety and Health Administration (OSHA), Labor.

ACTION: Request for information.

SUMMARY: The Occupational Safety and Health Administration requests comment on a proposal submitted to OSHA by the European Commission to permit the use of a Supplier's Declaration of Conformity (SDoC) as an alternative to the Nationally Recognized Testing Laboratories (NRTLs) product-approval process.

DATES: You must submit information or comments by the following dates:

- *Hard copy:* postmarked or sent by January 20, 2009.
- *Electronic transmission or facsimile:* sent by January 20, 2009.

ADDRESSES: You may submit comments by any of the following methods:

Electronically: You may submit comments electronically at *http://www.regulations.gov*, which is the Federal eRulemaking Portal. Follow the instructions online for making electronic submissions.

Fax: If your submissions, including attachments, are no longer than 10 pages, you may fax them to the OSHA Docket Office at (202) 693–1648.

Mail, hand delivery, express mail, or messenger or courier service: You must submit three copies of your comments to the OSHA Docket Office, Docket No. OSHA–2008–0032, U.S. Department of Labor, Room N–2625, 200 Constitution Avenue, NW., Washington, DC 20210. Deliveries (hand, express mail, messenger, and courier service) are accepted during the Department of Labor's and Docket Office's normal business hours, 8:15 a.m.–4:45 p.m., e.t.

Instructions: All submissions must include the Agency name and the OSHA docket number (*i.e.* , OSHA–2008–0032). Submissions, including any personal information you provide, are placed in the public docket without change and may be made available online at *http://www.regulations.gov.*

Docket: To read or download submissions or other material in the docket, go to *http://www.regulations.gov* or the OSHA Docket Office at the address above. All documents in the docket are listed in the *http://www.regulations.gov* index; however, some information (*e.g.* , copyrighted material) is not publicly available to read or download through the Web site. All submissions, including copyrighted material, are available for inspection and copying at the OSHA Docket Office.

FOR FURTHER INFORMATION CONTACT: *Press inquiries:* Jennifer Ashley, Director, OSHA Office of Communications, Room N–3647, U.S. Department of Labor, 200 Constitution Avenue, NW., Washington, DC 20210; telephone: (202) 693–1999. *General and technical information:* MaryAnn Garrahan, Director, Office of Technical Programs and Coordination Activities, NRTL Program, Occupational Safety and Health Administration, U.S. Department of Labor, 200 Constitution Avenue, NW., Room N–3655, Washington, DC 20210; telephone: (202) 693–2110. Our Web page includes information about the NRTL Program (see *http://www.osha.gov* and select ''N'' in the site index).

SUPPLEMENTARY INFORMATION:

I. Introduction

OSHA requests information and comments on a proposal it received to permit the use of a Supplier's Declaration of Conformity (SDoC) as an alternative to the Nationally Recognized Testing Laboratories (NRTLs) product-approval process. NRTLs are third-party (*i.e.* , independent) laboratories that have met OSHA's requirements for performing safety testing and certification of electrical and other products used in the workplace. NRTLs test and certify these products to determine whether they conform to appropriate U.S. product-safety testing standards. In contrast, an SDoC is a written statement, produced by an equipment manufacturer or supplier, that a product meets or conforms to a specified test standard or a set of requirements. OSHA is aware of the concept of manufacturer's self-approval and that it is allowed, for certain types of products, in the U.S. (by certain Federal agencies) and other countries. Details on this use are covered later in this RFI.

OSHA is taking this action in response to a request from the European Commission (EC) that OSHA allow an SDoC system for certain electrical products. SDoC is currently accepted for certain electrical products in all European Union (EU) countries. OSHA issued a similar Request for Information (RFI) in 2005 in response to a proposal from an industry trade association for OSHA to convert to an SDoC system for IT-related products. At that time, OSHA considered the responses from the 2005 RFI to be insufficient to justify initiating rulemaking for a change to an SDoC system. Since then, OSHA has obtained more information about SDoC, partially through meetings with the EC, and this information and the EC's proposal raise issues and topics that were not fully explored in the 2005 RFI. The Agency is currently interested in responses specifically related to the issues and topics raised in the EC proposal or otherwise described in this present RFI. *OSHA will examine all responses received from this RFI to determine whether to initiate rulemaking or take any other action with respect to SDoC.* OSHA requests comments from all interested parties on any of the issues raised in this RFI, or any other issues the public feels is relevant for OSHA to consider, and particularly seeks comments that include specific detailed scientific, technical, statistical, or similar data and studies, of a credible nature, supporting any claims made by commenters. OSHA wants to emphasize the importance of receiving such evidentiary information.

The remainder of this notice is divided into several sections. Section II gives background information on OSHA's NRTL system for the approval (also known as conformity assessment) [1] of electrical products. It also provides background information on OSHA's first RFI on SDoC, and then describes events leading to OSHA's current RFI. It also includes background information regarding the World Trade Organization (WTO) Agreement on Technical Barriers to Trade. Next, section III discusses requirements for OSHA rulemaking, section IV summarizes key aspects of the EC's proposal related to SDoC, section V discusses information that OSHA has obtained to date on the European Union's (EU) SDoC system for the approval of electrical products, and section VI describes what OSHA has found to date to be basic elements of an SDoC system, discussing certain topics and issues to provide a foundation for the questions for which OSHA is seeking specific information. Questions for the public's consideration are included in the latter three sections.

[1] While OSHA uses the term ''approval'' to describe the type of testing or certification activities performed by NRTLs, the international community often uses a different term for such activities: Conformity assessment. An international guide, ISO Guide 2, defines ''conformity assessment'' as ''any activity concerned with determining directly or indirectly that requirements are fulfilled.''

II. Background

A. OSHA Approval Requirements and NRTL Program

Many of OSHA's workplace standards require that certain types of equipment be approved by an NRTL. (In this RFI, OSHA refers to these provisions as ''NRTL approval requirements.'') Most of the requirements for NRTL approval of equipment (also called ''products'' herein) used in the workplace are found in the Agency's General Industry standards, 29 CFR part 1910. For example, 29 CFR 1910.303(a) (read together with the definitions of ''approved'' and ''acceptable'' in 29 CFR 1910.399) generally requires electric equipment or products used in the workplace to be approved by NRTLs. A comprehensive list of NRTL approval requirements and the categories of products which must be approved can be found on OSHA's Web site at *www.osha.gov/dts/otpca/nrtl/index.html*.

Since its inception, OSHA has required that electric and other types of equipment be approved by certain qualified organizations as one measure for ensuring the safety of this equipment, thereby continuing the long history in the U.S. of electric equipment safety-testing being performed by third-party (*i.e.* , independent) organizations. Adopting these requirements led eventually to the establishment of the NRTL Program, which ensures that these organizations are qualified to perform the product approvals.

OSHA's NRTL Program recognition process involves a thorough analysis of an NRTL applicant's policies and procedures and a comprehensive on-site review of the applicant's testing and certification facilities to ensure that the applicant meets the requirements of 29 CFR 1910.7. OSHA's staff also conducts annual on-site audits to ensure that existing NRTLs adequately perform their testing and certification activities and maintain the quality of those operations.

OSHA imposes on the NRTLs several requirements found in 29 CFR 1910.7. Three of the requirements set forth the definition for an organization's testing and certification capabilities. The remaining requirement mandates an organization's complete independence from any manufacturers, vendors, and major users of equipment subject to the requirements. This last requirement ensures that organizations within the program are third parties.[2]

NRTLs generally approve products for a manufacturer before the products are sold or shipped. The NRTL performs two major functions in the product-approval process: Testing and certification. For the first function, the NRTL tests a representative unit or prototype of the product to ensure that it has appropriate safety features. For this purpose, the NRTL may control and accept testing performed by parties that the NRTL has qualified. These parties typically include independent testing laboratories and even the product's manufacturer. The testing ensures that the product conforms to the technical requirements specified in test standards. For the second function, the NRTL certifies the product, not only by issuing a certificate and authorizing use of its certification mark, but more broadly through listing and labeling, and follow-up inspection programs. The NRTL may use a contractor under the NRTL's control to conduct the inspections. Inspections must be done on a regular basis at the product manufacturer's factories or assembling facilities to gain assurance that all manufactured units of the product are the same as the unit initially tested and certified.

For more information about the program, see the Web site (*www.osha.gov/dts/otpca/nrtl/index.html*), as well as Ex. OSHA–2008–0032–0004 of this docket and the exhibits under Docket NRTL03–SDOC, the latter pertaining to OSHA's first RFI on SDoC.

B. OSHA's First Request for Information on SDoC

OSHA previously published an RFI on SDoC in response to a proposal from an industry trade association, the Information Technology Industry Council (ITIC). It recommended a change from the NRTL approval to an SDoC system for ensuring the safety of information technology equipment used in the workplace. (Ex. 1, Docket NRTL03–SDOC.) The proposal claimed that SDoC would reduce products' time-to-market delays and would not have a detrimental effect on the safety of affected products. It also claimed that information-technology (IT) equipment had a strong workplace safety record.

ITIC further suggested that all IT equipment should be approved to meet the technical requirements of the IEC 60950 test standard issued by the International Electrotechnical Commission (IEC), a leading organization in the development of international test standards. ITIC advocated the use of this test standard by all countries. (Ex. 1A, Docket NRTL03–SDOC.) OSHA noted that NRTLs already used UL 60950, the corresponding U.S. harmonized version of the IEC 60950 standard, for approving IT equipment. The IEC 60950 standard (or UL 60950 or other harmonized versions) covers not only IT, but also a number of other common products (*e.g.*, printers, copiers, and telephones) and specialized equipment (*e.g.*, communications terminal equipment and mail-sorting machines).

The proposal also included a study by Industry Canada, an agency of the Canadian government, which discussed ways that agencies in various countries use SDoCs for approvals of equipment. (Ex. 1B, Docket NRTL03–SDOC.) The study noted the importance in an SDoC system of having a responsible regulatory agency with audit and enforcement authority after products are sold. In contrast, under current OSHA regulations, NRTLs must perform key functions before products are sold. The study identified only EU countries as allowing use of SDoC for regulating the safety of electric equipment. The study noted the importance of each country's ''market surveillance authority to monitor the products placed on the market.'' (*Id.*, page 28.) As also noted, with respect to EU's enforcement measures, ''[m]any surveillance authorities may use warnings, administrative actions (such as [product] modifications, recall, sales ban, confiscation and publication) and, ultimately, prosecution (fines and imprisonment).'' (*Id.*, page 29.)

OSHA determined, however, that ITIC's proposal lacked information needed to determine whether to initiate rulemaking. To obtain more information and give interested parties an opportunity to comment on the ITIC proposal, OSHA issued an RFI on November 15, 2005 (70 FR 69355). The RFI contained seven questions seeking detailed information related to the operation of an SDoC system, and seven questions related to specific aspects of the ITIC proposal. Twenty-six comments were received in response to the RFI. Commenters in favor (mainly from three product industry associations) claimed that SDoC would reduce product time-to-market and that SDoC systems have similar safety records to OSHA's NRTL Program. Commenters opposed to the proposal (mainly from product industry associations, individuals, and NRTLs) claimed that the competence of different manufacturers varied widely, and that there were no sufficient reasons for OSHA to change its system. These latter commenters claimed that safety would suffer under an SDoC system. Some commenters also stated that OSHA did

[2] NRTLs may be based in the U.S. or in other countries. Currently, there are 15 NRTLs, of which 13 are established in the U.S. and two are foreign-based.

not have the authority to implement an SDoC system. Industry associations opposed to the proposal included the National Electrical Manufacturers Association. Many commenters, both for and against the proposal, stated that adoption of SDoC would require OSHA, at a minimum, to implement a postmarket-surveillance system, which would require monitoring products after they reached the market, thereby leading to potential enforcement actions such as product bans or recalls.

In general, however, commenters did not provide adequate data to support their arguments. For example, parties on both sides of the SDoC question offered little in the way of adequate data to support their positions. With regard to the safety risk of the products, the data or other information were not presented in a manner to ensure validity or to allow for analysis and evaluation. In this regard, the American Council of Independent Laboratories (ACIL) reported results from a survey it conducted, stating that ''50% of IT and Office Equipment products were non-compliant after first submittal to the NRTL,'' and that 50% of these noncompliances were ''major safety and health related.'' (Ex. 2–5, Docket NRTL03–SDOC.) However, ACIL offered no report summarizing all the results of the survey or information about the methodology of the survey, the response rate, or the data upon which respondents relied. Likewise, Underwriters Laboratories (UL) provided no details about how it determined that ''[a]pproximately 50% of the IT equipment'' submitted to it ''initially fails to meet the applicable safety requirements.'' (Ex. 2–4–1, *Id.*) Similarly unsupported were UL's statements that ''[f]ield sampling in the European Union suggests that up to 50% of the IT equipment on the market in the European Union today does not comply with applicable requirements'' and that ''[i]n 2004, electric appliances accounted for 27 percent of RAPEX-posted products and were determined to present a serious risk to consumers' health and safety.'' (Ex. 2–4–1, *Id.*) (RAPEX is formally called the Community Rapid Information System.) The Canadian Standards Association referenced a German study which purported to show that ''certified ('tested') products appeared much less often in accident and fault reports than uncertified products,'' but did not provide the study for OSHA's review or a citation where it might be found. (Ex. 2–7–1, *Id.*)

Similar problems exist with the data submitted by the proponents of SDoC. ITIC calculated a defect rate of 0.2 percent for ''US computer products'' between 1994 and 1999, but did not provide the original sources of the data from which this figure was calculated. (Ex. 1, *id.*) It is also unclear why more recent data were not used. In any event, their approach did not account for a significant confounding factor—that all computer equipment operating from an electric outlet and used in U.S. workplaces is required to be NRTL approved—so ITIC's method did nothing to measure the safety of equipment sold or used only under an SDoC system.

Other data submitted by ITIC address this problem, in part. A graph in a PowerPoint presentation prepared by UNICE (now known as ''BUSINESSEUROPE''), and submitted by ITIC, shows that in 2004, 27% of RAPEX notifications of unsafe products were for products manufactured in the EU, compared with 2% for U.S.-manufactured products. (Ex. 2–9–1, *Id.*) Again, the underlying data are not provided. However, taken at face value, these statistics suggest that an NRTL system may reduce the risk of unsafe products. No firm conclusions may be drawn, however, without more information, such as the percentages and types of U.S.-manufactured goods and EU-manufactured goods sold in the EU. Another UNICE graph showed a relative decrease in electrocutions in Germany compared to the U.S. between 1960 and 1989. (Ex. 2–9–1, *Id.*) However, the source of the data does not appear to be readily available in the U.S., the actual numbers of electrocutions per year and a stratification by causes are not provided in the graph, no reason is given why more recent data were not obtained, and it is unclear whether the data are normalized for the two populations.

In summary, much of the information submitted by commenters lacked the supporting data and details requested in the RFI. In addition, as the above examples demonstrate, some comments provided inadequate support for data, figures, or claims, or provided little or inadequate explanation. OSHA analyzed all of the comments and concluded that the information did not justify a decision to initiate rulemaking to adopt SDoC. Most importantly, OSHA found that the information it received did not provide reasonable assurance that adopting SDoC would provide a high degree of protection for the safety of products used in the workplace. Without such assurance, OSHA found little justification to initiate a rulemaking. Furthermore, OSHA believed that implementation of SDoC might require a change to OSHA's legislative authority in addition to an increase of appropriations. The change in legislative authorization appeared necessary because OSHA lacked authority to adopt many of the enforcement measures for electrical safety noted earlier for the SDoC system implemented by the EU, including product recalls, bans, and confiscation, among other measures. The Agency could not justify such requests from Congress based on the information obtained through the RFI process.

In view of these findings, which summarize only some of the key areas of concern, OSHA decided to take no further action on the proposal and announced its decision in the Spring 2007 Semi-Annual Regulatory Agenda, published on April 30, 2007 (see 72 FR 22870).

C. Events Leading to Second Request for Information on SDoC

On April 30, 2007, President Bush and his EU counterparts signed the Framework for Advancing Transatlantic Economic Integration Between the U.S. and the EU (''Framework Agreement'' or ''Agreement''). (Ex. OSHA–2008–0032–0002.) This is a trade-related agreement that has a number of objectives, foremost of which is ''removing barriers to transatlantic commerce'' (see section II of the Agreement). The Agreement's Annex 1 lists a number of activities affecting different U.S. and EU agencies and sectors, including ''initiating an exchange on conformity-assessment procedures for the safety of electrical equipment.''

The agreement established a Transatlantic Economic Council (TEC) to monitor progress toward meeting the goals of the Framework Agreement. As stated in the Agreement, the TEC is ''co-chaired, on the U.S. side, by a U.S. Cabinet-level official in the Executive Office of the President and on the EU side by a Member of the European Commission, collaborating closely with the EU Presidency.'' Through the TEC, in July 2007, the EC issued a brief statement proposing that OSHA adopt SDoC for all electric equipment, claiming that this action would ''reduce unnecessary costs for transatlantic trade.'' (Ex. OSHA–2008–0032–0003.) Working in part through the TEC, OSHA and the EC arranged a meeting to undertake the Annex 1 activity regarding the exchange of information on the conformity-assessment procedures for the safety of electrical equipment.

On October 11, 2007, representatives of OSHA and two other offices within the Department of Labor met with representatives of the EC to conduct an

exchange of information in furtherance of the Annex 1 activity. A summary of this meeting was produced that captures key aspects of these systems. (Ex. OSHA–2008–0032–0004.) The participants considered the meeting to be productive, but neither side was able to ask all of its questions due to lack of time.

At its first formal meeting, held on November 9, 2007, the TEC issued a joint statement requesting OSHA to report, at the TEC's next meeting, on ''progress made to facilitate trade in electrical products with respect to conformity assessment procedures for the safety of such products.'' (Ex. OSHA–2008–0032–0009.) In March 2008, the EC issued another statement requesting the ''[U.S.] Government to allow the import and sale of any low-risk electrical and electronic product on the basis'' of SDoC.[3] (Ex. OSHA–2008–0032–0005.) At the second formal TEC meeting, held on May 13, 2008, Secretary of Labor Elaine Chao stated that OSHA would issue a second RFI on SDoC. (Ex. OSHA–2008–0032–0006.) Among other things, this RFI allows OSHA to obtain a better understanding regarding SDoC and, as noted earlier, certain related topics and issues not fully explored in the 2005 RFI. In June 2008, at the request of OSHA, the EC submitted a formal rationale for its request that OSHA adopt SDoC for ''electrical and electronic products.'' This rationale is discussed in section IV.

D. World Trade Organization's Agreement on Technical Barriers to Trade

The U.S. and 152 other countries are Members of the World Trade Organization (WTO) and party to the Agreement Establishing the World Trade Organization which includes the Agreement on Technical Barriers to Trade (TBT Agreement) (see Ex. OSHA–2008–0032–0007). The TBT Agreement addresses technical regulations, standards and conformity assessment procedures for products or related processes and production methods. In terms of the TBT Agreement, OSHA's NRTL approval requirements are considered conformity-assessment procedures. The TBT Agreement states Members' desire to ensure that technical regulations, standards, and conformity assessment procedures do not create unnecessary obstacles to trade while recognizing that no Member should be prevented from taking measures that are necessary *inter alia* to protect human health or safety. Article 5 of the TBT Agreement requires Members to ensure that its central-level conformity assessment procedures are not prepared, adopted or applied with a view to or with the effect of creating unnecessary obstacles to international trade and explains that ''this means *inter alia* that conformity assessment procedures shall not be more strict or be applied more strictly than is necessary to give the importing Member adequate confidence that products conform with the applicable technical regulations or standards, taking into account the risk non-conformity would create.''

Congress amended the Trade Agreements Act of 1979, as amended (''TAA''; 19 U.S.C. 2501 *et seq.*) to implement the TBT Agreement. In particular, the TAA indicates that Federal agencies may not ''engage in any standards-related activity that creates unnecessary barriers of trade.'' 19 U.S.C. 2532. A standard is ''necessary'' in this context:

> [I]f the demonstrable purpose of the standards-related activity is to achieve a legitimate domestic objective including, but not limited to, the protection of legitimate health or safety, essential security, environmental, or consumer interests and if such activity does not operate to exclude imported products which fully meet the objectives of such activity.

19 U.S.C. 2531(b).

The TAA also requires Federal agencies to take international standards into account in standards-related activities, and to base their standards on the international standards ''if appropriate.'' 19 U.S.C. 2532(2)(A). However, international standards are not ''appropriate'' if they do not adequately protect ''human health or safety, animal or plant life or health or the environment.'' 19 U.S.C. 2532(2)(B). Likewise, the TAA provides that it may not be construed ''to limit the authority of a Federal agency to determine the level it considers appropriate of safety or of protection of human, animal, or plant life or health, the environment, or consumers.'' 19 U.S.C. 2531(a)(2).

OSHA's NRTL Program and its third-party approval requirements apply to certain equipment or products used in the workplace, regardless of whether they are manufactured within or outside of the U.S. In addition, the NRTL Program is open to both U.S. and foreign-based organizations, which gives them equal opportunity to become an NRTL. OSHA's requirements for approval of electric equipment are necessary measures for protecting employees against electrical shock, electrocution, burns, and fires, and, thus, to protect the safety of the employees. The NRTL Program is necessary to provide assurance that the approvals are performed by qualified organizations. As discussed later in this notice, the EC views OSHA's third-party approval requirements and NRTL Program as unnecessary obstacles to trade. (See, for example, Ex. OSHA–2008–0032–0005.) Although OSHA disagrees with this view, it issues this RFI to gather information bearing on the question that an SDoC system, at least for some categories of equipment, may protect employees sufficiently to satisfy the requirements of the OSH Act.

III. Requirements for OSHA Rulemaking

The primary purpose of the Occupational Safety and Health Act is to assure, so far as possible, safe and healthful working conditions for every American employee. 29 U.S.C. 651(b). To fulfill this purpose, Congress gave the Secretary of Labor the authority to promulgate, modify, or revoke mandatory occupational safety and health standards. 29 U.S.C. 655.[4]

The Act, the case law developed under it, and OSHA regulations establish a number of requirements that the Agency must meet before exercising this authority. Some of these requirements are procedural. For example, the Agency must support its findings with substantial evidence in the record developed through the rulemaking proceedings, and explain the basis for accepting or rejecting all major suggestions for modification of a proposed standard. *See* ''Supplemental Statement of Reasons'' for the final rule on Control of Hazardous Energy Sources, 58 FR 16612 at 16615; *see also* 29 U.S.C. 655(b)(2), (b)(3), and (f). In addition, when OSHA decides to change a standard, it must provide a reasoned basis for the change. *International Union, UAW* v. *OSHA,* 37 F.3d 665, 668–69 (DC Cir. 1994) (''*Lockout/Tagout II*'')

[3] OSHA does not regulate the ''import and sale'' of products, but its rules do affect whether certain products may be used in the workplace, thus affecting whether those products may be sold or imported into the U.S.

[4] In its comments submitted in response to the previous RFI, ITIC argued that OSHA could adopt an SDoC system through an interpretative rule without notice and comment. (Ex. 4–19, pp. 10–12, Docket NRTL03–SDOC.) OSHA disagrees with this assertion. Current rules require NRTLs to be ''completely independent of * * * manufacturers or vendors of equipment or materials being tested. * * *'' 29 CFR 1910.7(b)(3). A change to this requirement would constitute a legislative rule that ''directly governs the conduct of [employers], affecting individual rights and obligations,'' *Long Island Care at Home, Ltd.* v. *Coke,* 511 U.S. __, 127 S. Ct. 2339, 2350 (2007) (internal quotation marks omitted). To guarantee that employers have an opportunity to participate in the formulation of these individual rights and obligations, OSHA must follow the notice, comment, and hearing procedures of the Administrative Procedure Act and the OSH Act.

OSHA also is constrained by substantive rulemaking requirements. Accordingly, the OSH Act requires that safety standards, like the NRTL approval requirements, must ''afford a high degree of protection'' to employees. *Lockout/Tagout II,* 37 F.3d at 669. Thus, for OSHA to adopt an SDoC approval standard and related program, it must find, on the basis of substantial evidence, that the SDoC system provides this high degree of protection to employees who use equipment that would be covered by the standard. In this regard, OSHA has been careful to ensure that changes to its product-conformity program maintain existing levels of employee safety. *See* the final rule on Safety Testing or Certification of Certain Workplace Equipment and Materials, 53 FR 12102 at 12103, April 12, 1988.

IV. EC's formal proposal for OSHA to adopt SDoC

A. Overview of rationale

The EC's proposal to OSHA concerning the adoption of SDoC is captured in its March 2008 statement (Ex. OSHA–2008–0032–0005) and supplemented by its June 2008 rationale (Ex. OSHA–2008–0032–0008).[5] The March 2008 statement formally requests that OSHA ''review its conformity assessment procedures in the area of electrical and electronic products.'' In this statement, the EC also advocated SDoC because it believes third-party conformity assessment of ''low-risk electrical and electronic product[s]'' in the U.S. ''imposes unnecessary additional costs and market-entry barriers on exporters of these goods. * * *'' The statement describes the types of products the EC considers to be outside the scope of ''low-risk electrical and electronic product[s],'' such as ''electrical equipment for use in an explosive atmosphere, * * * for radiology and medical purposes, * * * [and] electricity meters, plugs, and socket outlets for domestic use. * * *'' The EC, therefore, maintains that such products present a level of risk that would make SDoC an inappropriate means of conformity assessment, and the EC requires the use of third-party approvals in such cases.

In its rationale, the EC noted that it has long experience with ''conformity assessment regimes'' that do not require manufacturers to obtain third-party certification. The EC stated that it made ''an assessment of the risk to consumers, workers, and the general interest'' as to whether certain ''non-compliant products [reaching] the market would pose a danger.'' The EC then concluded that for these products ''these risks are at a level that they can be satisfactorily managed'' by requiring manufacturers to demonstrate compliance and retain proof of compliance for inspection by public authorities. It also stated that such rules, along with legal liabilities on manufacturers, consumer-protection legislation, and appropriate enforcement measures would guarantee a high level of safety for European consumers. The EC further stated that it instituted its approach in the area of electrical safety through its ''Low Voltage Directive,'' for products rated ''between 50–1000 volts AC and 75–2500 [sic] volts DC. * * *'' (Note: the actual DC upper limit is 1500 volts.) We will provide some general information about EC directives in the next section of this notice.

The EC contends in its rationale that OSHA's third-party requirements cause an ''imbalance in market access * * * [by manufacturers for] transatlantic trade in electrical products,'' and an ''imbalance in market access for the [EU] certification industry'' because they are subject to OSHA's NRTL approval requirement while U.S. certifiers are not subject to any such comparable EU requirement. The EC also asserts that the requirements increase the likelihood that countries importing products from the U.S. and the EU will establish their own form of testing and approval. The EC further contends that an OSHA change to SDoC ''is justified by the fact that European consumers and workers experience a high if not higher level of electrical safety as their counterparts in the US.'' It attributes this effect in part to ''the high level of safety of electrical and electronic devices.'' Moreover, it contends that ''[s]tatistics furthermore demonstrate that accidents can seldom be attributed to products, but are normally the result of 'live' wires and neglect. Where they can be attributed to products, there are no indications that in the EU there is a relationship between non-compliance and incidents [of accidents].'' Finally the EC claims that ''market mechanisms [in the EU] ensure that most electrical and electronic products and especially high technology products and high volume products follow rigid quality controls and have an excellent record of compliance.''

The EC's rationale also suggests several topics to cover in this RFI, and OSHA is including the questions in section VI, below, to address these topics.

B. OSHA Comments on EC's Rationale

The key part of the EC's rationale is its conclusion that the safety risk associated with noncompliant electrical products can be satisfactorily managed through SDoC. Indeed, this is a threshold determination that OSHA must make before it proposes an SDoC approval standard or related program. As discussed below, however, to date the EC has failed to support this conclusion with the evidence necessary for OSHA to reasonably ensure that SDoC would satisfy the standard-setting requirements of the OSH Act. Such support could include, for example, an explanatory study or report that adequately describes, quantifies, or otherwise specifies the level or characteristics of noncompliance, or the characteristics of the electrical or other safety risk involved. It is clear that the EC would not permit SDoC for particular equipment if it believes that the safety risk of noncompliance is too high. In fact, it justifies the use of SDoC for low-voltage products on the grounds that the safety risk of noncompliance is low. (Ex. OSHA–2008–0032–0008, p. 1.) However, it is unclear from the EC's proposal whether the EU determined that the safety risk from noncompliance was low before it implemented the SDoC for low-voltage products, or determined that the low level of risk resulted through implementation of SDoC. Also, it was unclear from the proposal how the EU made this determination. In addition, the EU believes that this low level of noncompliance and the resulting low level of safety risk is maintained because manufacturers are required to retain ''proof'' of compliance and because manufacturers are subject to legal ''liability, consumer protection legislation and an appropriate enforcement.'' (*Id.*) The EC has not provided evidence to support this conclusion regarding the effectiveness of an SDoC system, and a reliable means of tracking the results of such a system would help to provide the required evidence. OSHA would need to review this evidence before it could reach similar conclusions.

The EC further contends that European consumers and employees ''experience an equally high, if not higher level of electrical safety as their counterparts in the U.S.'' (Ex. OSHA–2008–0032–0008, p. 2.) The EC attributes this ''higher level'' in part to ''the high level of safety of electrical and electronic devices.'' (*Id.*) The EC also claims that ''[s]tatistics furthermore

[5] In August 2008, OSHA received a complementary proposal, jointly submitted by three industry associations, that provides a suggested approach for implementing an OSHA SDoC system. See section VI.G if you wish to comment on this approach.

demonstrate'' that accidents involving equipment are not attributable to ''a relationship between non-compliance and incidents [of accidents].'' (*Id.*) It later notes that ''most electrical and electronic products and especially high technology products * * * have an excellent record of compliance.'' (*Id.*) To date, OSHA has received no data to support any of these statements. OSHA would need to receive such information to determine whether to initiate rulemaking on SDoC.

C. Questions

As noted above, the EC identified a number of issues in its rationale and suggested that the RFI include questions addressing a number of topics. OSHA's comments above also serve as a basis for other questions.

Questions Related to Details and Data Supporting EC's Rationale

IV.1. What information and evidence is available to support the conclusion that the risk of nonconforming products posing a danger was, is, and will be low under SDoC? If possible, describe, quantify, and otherwise specify the level or characteristics of noncompliance, and the characteristics of the electrical or other safety risk involved.

IV.2. What data, documentation, or records exist to demonstrate adequately that European consumers and employees experience a level of electrical safety at least as high as their counterparts in the U.S.?

IV.3. What legal liability, consumer-protection legislation, and enforcement programs exist in the EU to ensure that its SDoC system has maintained and will maintain the risk of danger posed by noncompliant products at a low level, or to ensure that the level of noncompliant products will be low? Are there similar protections in the U.S.?

IV.4. What data or documentation exists to demonstrate adequately that accidents in the EU involving electric equipment are not attributable to product noncompliance, and that most electrical and electronic products, especially high-technology products, have an excellent record of compliance?

V. The EU's SDoC System

A. Background

On June 25, 2008, the EC submitted a formal proposal to OSHA to issue a second RFI on the adoption of an SDoC system for certain ranges of products. (Ex. OSHA–2008–0032–0008.) The proposal states that the RFI would further the TEC's goals of ''promoting transatlantic trade and regulatory convergence.'' It states that obligatory third-party certification of certain products, such as is required by OSHA, can create barriers to trade, and that programs that create such barriers should be justified by the additional benefits they confer. In addition, the proposal points out that the U.S. has implemented SDoC systems for many product categories other than electrical products. The proposal claims that the EC's system is as effective as the U.S.'s for protecting both consumer and employee safety.

The proposal requests that the RFI obtain information for an assessment of the elements that would be necessary to implement an SDoC system, and to obtain data and information about what classes of products such a system would most appropriately regulate. At the time of publication of this RFI, the EU's SDoC system is the only one of which OSHA is aware that exists for the conformity assessment of electrical-product safety. In this section, we review the information we have obtained on this system as a basis for later questions seeking a better understanding of this system.

B. The EU's SDoC system

The summary of the October 11, 2007, information-exchange meeting between OSHA and EC representatives (Ex. OSHA–2008–0032–0003) provides much of the information included in this part. Research by OSHA staff also provided information.

Products covered by the EC's SDoC system for electrical safety are determined by the Low Voltage Directive (LVD) (Ex. OSHA–2008–0032–0017), which was implemented in 1973 to promote the free movement of goods across the EU. (The LVD does not apply to goods intended for export to countries outside the EU.) Such directives constitute laws enacted by the European Council and European Parliament. These laws are generally proposed by the EC. More information on these institutions and their functions is available at *http://europa.eu/index_en.htm* . The LVD covers all equipment between 50 and 1000 volts AC and 75 and 1500 volts DC, except as specifically excluded in its Annex II. This annex lists, among other types of equipment, ''electrical equipment for use in an explosive atmosphere, those for radiology and medical purposes, and those for goods and passenger lifts.'' The lower and upper limits of the LVD were set to exclude electric equipment of the telecommunication industry and electric-power industries, respectively. The EC's proposal asserts that all products covered under the LVD have been demonstrated to be ''low-risk,'' and that electrocutions have become rare in the EU since the LVD was implemented, which the EC argues indicates the effectiveness of the EC's SDoC system. In general, the conformity-assessment approach used in the EU classifies products according to eight categories, with requirements ranging from the least stringent (Module A) to the most stringent (Module H). Module A, covering only the lowest-risk products and formally called ''internal production control,'' is the only system for which SDoC is permitted on its own, *i.e.*, without other and stronger regulatory controls. (See Ex. OSHA–2008–0032–0015 for an illustration of the safety requirements for products covered by each module.)

Enforcement under the LVD is conducted through Member States' postmarket surveillance. The EU countries must enact their own national laws to implement the LVD, and assign at least one agency (called the ''surveillance authority'') to enforce these laws. In the United Kingdom, for example, this role is filled by approximately 250 local government agencies, whereas in other countries, one agency or one part of an agency may fill this role. The surveillance authority's inspections are a critical aspect of its activities. Among the countries, the kinds and number of inspections vary depending on the number of available inspectors, the amount of available funding, and the type and number of problems the EU country is facing. In at least one country, inspections are based primarily on complaints and accidents, and in other countries, inspections are based primarily on a random selection of products. Once a potential deficiency is found, the manufacturer, if known, may be required to submit to the authority a report by an independent testing organization (called a ''notified body'' in the EU) demonstrating that the product conforms to the applicable test standard. For those products that do not conform, the manufacturer must make a risk assessment and propose corrective actions. Ultimately, the country's surveillance authority makes a final decision on risk, which, as noted in the next section, can vary substantially across countries. The authority then decides what remedial action to take, which may include product recall, ban, quarantine, or confiscation; assessing financial penalties; and, in more serious cases, assessing criminal penalties. If the authority cannot locate the manufacturer or its authorized representative, the authority may hold the retailer (or other party placing the

product in that country's market) responsible, and impose the remedial action on that party.

For products posing immediate safety risks, and affecting more than one country, the EU has a rapid alert system (RAPEX). This system is increasingly used for communicating information about noncompliant products. Another notification system, the Information and Communication System for Market Surveillance (ICSMS), also has this purpose, but it is not used by all Member States. Technical files of products covered under the directive must be maintained by the manufacturer for at least 10 years after the products go on the market. Private-sector bodies called ''European Standardisation Organisations'' are responsible for developing and maintaining the technical safety specifications for the products, similar to the role of the American National Standards Institute in the U.S. In addition, a product that complies with the harmonized EU versions of international test standards is assumed to be in compliance with the LVD. If challenged by the Member States' surveillance authority, a manufacturer must prove it has complied with the LVD either by demonstrating compliance with harmonized test standards or by other means. In cases for which the manufacturer cannot be found, the burden passes to the importer, who can be liable for penalties and applicable fines. However, there is no requirement that manufacturers or importers register with any Member States, making it difficult in some cases to identify the responsible party.

While EU Member States cannot add safety-related requirements to the LVD, they can regulate nonsafety-related public-interest requirements. The LVD, like other directives, is binding upon Member States, which are supposed to implement it by transposing it into their own national laws. If the Member States do not implement or do not properly implement the LVD or other product-related directives through their own legislation, they are nonetheless obligated to accept products declared compliant with the LVD unless the products are found to be noncompliant. Fines imposed on manufacturers or importers for noncompliance with the LVD are levied by individual Member States, and may vary between different Member States.

C. Effectiveness of the EU's SDoC system

The EC has stated that its SDoC system has provided European consumers and employees with a high level of safety. It argues that this level is the same or higher than that achieved by the U.S. under its NRTL system. However, the EC did not provide data, in its submissions, to demonstrate its position in a way that would support rulemaking by OSHA. As noted by the EC in its presentation at the October 11, 2007, meeting with OSHA, the lack of harmonization in the EU of methods to collect statistics on electrical accidents hinders any comparison of statistics between the U.S. and the EU, or even among Member States within the EU.

OSHA has obtained information that highlights different aspects of the EU's SDoC system, and provides a gauge of its effectiveness. We are summarizing this information solely to provide a basis for some of our questions in this RFI, and not to draw conclusions from it.

First, we present the reports of the results of two projects that were undertaken by EU market-surveillance authorities, then discuss a relevant report issued by the staff of an office of the EC, and finally describe some aspects of the EU's RAPEX and ICSMS systems.

The Low Voltage Directive Administrative Co-operation (LVD AdCo) is ''an independent Working Group run and chaired by the Member States. The Group is a forum for co-operation and exchange of information between national market surveillance authorities.'' (Ex. OSHA–2008–0032–0010.) In 2006, LVD AdCo organized its first cross-border market-surveillance project, *i.e.* , a multi-country cooperative and coordinated effort, by the surveillance authorities from 15 Member States. In deciding which products to target, the project report notes that consideration was given to the differences in ''infrastructures and funding * * * between member states,'' and the need to ensure ''that cost was minimized and that the technical requirements for the tests were within the possibilities of all potential participants.'' (Ex. OSHA–2008–0032–0011, p. 5.) This approach highlights the technical and financial limitations faced by some Member States in performing their surveillance functions.

The study targeted ''portable luminaries'' (*i.e.* , portable lamps) partly because they ''are relatively cheap to purchase,'' thus making this project feasible for ''member states with small [market-surveillance] budgets.'' These products were selected for study because of the large number of problem notifications found with these products by Member States, as shown in a chart depicting past ''safeguard clauses and RAPEX notifications.'' (Ex. OSHA–2008–0032–0011, p. 6.) For the project, a total of 226 luminaires were evaluated for conformance to applicable administrative and technical requirements. Of this total, 38% originated in the EU, 23% originated from China, 10% originated from other countries outside of the EU, and 29% had no country of origin specified. The project found that 72% (162) of the 226 luminaires failed one or more of the technical requirements, with nearly half (74) containing ''serious'' technical hazards, and 23% (53) of the 226 luminaires had administrative nonconformities (missing ''CE'' marks, missing or incorrect technical files, missing or incorrect declarations of conformity, and other similar problems). (*Id.*, p. 17.) According to the report of the project, sampling was not random. Consequently, the results obtained ''do not give a dependable estimate of the percentages [of] non-compliant luminaires on the market.'' (*Id.*, p. 18.) However, the report indicates that the results of the project match the actual experiences of several EU Member States. A summary of the report states the following:

> Many companies appear to neglect assuring conformity with the administrative requirements in the Directive. Declarations of conformity and technical files were often not available or did not fit the luminaires themselves. The LVD prescribes module A for conformity assessment, which amounts to self-certification by the manufacturer or importer into the EU. The choice for module A was made because of the relatively minor hazards associated with electrical products. However, the new and global approach is based on the assumption that the actors comply with the conformity assessment procedures before CE-marking the product in order to assure safe products on the markets. For fragmented markets like the one for luminaires, this assumption does not appear to be valid, if the results of this and previous national actions are indeed indicative. (*Id.*, p. 19.)

The report lacks any analysis of the underlying causes for the high rate of nonconformities found. It recognizes some difficulties in market surveillance caused by differences between the systems of EU Member States, noting:

> Differences exist between the member states in the grading of shortcomings: the same violation of a specific requirement leads to different assessment of the resulting risk and as a consequence to different interventions. Given the differences in legal systems[,] differences in sanctions imposed in the various member states for similar violations cannot be avoided.

The report states further that ''multinational companies operating in the European union * * * will rightly wonder why it is that the same violation is considered a serious risk in one

member state, while another member state classifies it as a minor risk.'' The report suggests that in this area ''harmonization is urgently needed.'' (*Id.*, p. 23.)

A similar project was conducted on extension cords, and a summary of the results was provided in a press release. (Ex. OSHA–2008–0032–0012.) The press release indicated that 20 EU Member States participated in the study, and 210 extension cords were tested. The results show that only one in six cord-extension sets fully complied with the LVD and the General Product Safety Directive (GPSD) requirements. (The GPSD specifies requirements for general consumer products used in the EU.) Although the noncompliant samples also included those products that exhibited only administrative failures, approximately 58% of the cord-extension sets tested were considered sufficiently unsafe by the authorities to justify a sales ban or product recall.

OSHA also reviewed a document prepared by the EC's staff (Ex. OSHA–2008–0032–0013), which provided details about the EU's market-surveillance system and served as the basis for associated legislation that the EU was considering. This document covers a wide range of issues in a number of areas where the EU's system needed improvement.

Under ''What are the Problems to Tackle,'' the report states, ''Experience with the implementation of [European] Community legislation in the area of free movement of goods has highlighted certain weaknesses and shown that the effectiveness of the system can still be improved.'' (Ex. OSHA–2008–0032–0013, p. 12.) The document also declares that, ''It is generally noted that the enforcement of EU product legislation is unsatisfactory and a considerable number of non-compliant (and potentially dangerous) products reach the market. The share of non-compliant products can only be estimated and the situation differs very much from sector to sector and from Member State to Member State.'' (*Id.*, p. 19.). This statement partially corroborates the findings in the report on luminaires, which indicated that the high level of nonconformities results from difficulties faced by Member States in enforcing the LVD. Further, the staff document notes, ''Currently, market surveillance does not operate effectively throughout the Community. * * *'' (*Id.*, p. 20.) The document notes later, ''In practice market surveillance authorities often experience difficulties in identifying the person who has actually manufactured and/or supplied the products * * *'' (*Id.*, p. 23.) OSHA is aware that the legislation pertaining to this staff document was passed and is due to go into effect in 2010, although OSHA has not obtained the details of the measures adopted to address the problems and recommendations in the staff document.

The staff document states that the number of noncompliant products in the EU is unknown and the reporting systems in the EU lack uniformity. The EU's RAPEX and ICSMS are notification systems used by market-surveillance authorities for enforcement purposes. Formally called the Community Rapid Information System, RAPEX is used for a number of ''non-food consumer products.'' It is not typically used for products that are mainly for industrial or commercial purposes. It also is not used for notification of noncompliant products when ''the effects do not or cannot go beyond the territory of a Member State. * * *'' (Ex. OSHA–2008–0032–0021, p. 7.) As a result, Member States may judge a number of actions to be outside the scope of RAPEX and, thus, not report them. Therefore, RAPEX results may not give an accurate estimate of problems associated with certain products. For example, the 2006 annual report for one Member State authority showed that it had 3,770 queries and complaints related to electrical goods. (Ex. OSHA–2008–0032–0022, p. 29.) The report further states that about 200 investigations were carried out relating to products that may pose a safety risk. (*Id.*, page 20.) The number of RAPEX notifications for that country in 2006 was 14. (Ex., OSHA–2008–0032–0023, p. 15.)

The following questions seek further information and data regarding these studies, as well as information and data pertaining to the effectiveness of the EC's SDoC system.

V.1. The luminaire and cord-extension projects identified substantial noncompliance with the LVD and, if the results are representative of the wider array of products for which an SDoC is acceptable, appear to be inconsistent with the EC's claim regarding the safety of products evaluated under their SDoC system. Is this a valid inference from these studies? Do the data and study methods have limitations that would affect this inference?

V.2. What data and/or record systems exist in each Member State to track the effectiveness of their SDoC system?

V.3. Are other reports and documents available that evaluate whether the SDoC system implemented by each Member State is effective or ineffective in safeguarding product safety? What are the strengths and weaknesses of the RAPEX, ICSMS, or other data or reporting system used in the EU?

VI. Topics and Issues for Consideration in a Possible Rulemaking

As part of this RFI, OSHA is seeking information on the topics and associated issues described below (with the questions for each topic noted parenthetically):

A. Product safety in an SDoC system (VI.1 to VI.5).

B. Product risk and specifications (VI.6 to VI.15).

C. Administration of an SDoC system (VI.16 to VI.26).

D. Costs of an SDoC system (VI.27 to VI.30).

E. Enforcement of an SDoC system (VI.31 to VI.34).

F. Effects on trade (VI.35 to VI.37).

G. Implementation suggestions by certain industries (VI.38).

In responding to the questions in this section, please explain the reasons supporting your views, and identify and provide the relevant information on which you rely, including data, studies, articles, and other materials.

A. Product Safety in an SDoC System

A major purpose of this RFI is to determine whether SDoC approval of certain electrical products would provide employees with a high level of protection (see section III above). OSHA's current NRTL Program meets this standard. NRTLs must first evaluate and test a sample, and then perform follow-up inspections of manufacturing facilities to ensure that they continue to make products that are safe to use. These inspections are critical, and to obtain an adequate level of assurance, NRTLs may, if warranted, inspect 100% of all products in a production batch for this purpose. OSHA has a number of policies that specify controls that NRTLs must have in place to properly accomplish pre-market evaluation. OSHA then audits each NRTL to ensure that they have instituted these controls and that the controls are working properly. NRTLs deficient in these areas must make corrections or face revocation of their recognition. These measures provide the necessary assurance that OSHA's current system provides a high level of protection to employees.

One measure of the effectiveness of OSHA's current system is recalls issued by the Consumer Product Safety Commission (CPSC). The OSHA NRTL Program staff reviews these recalls, and for those involving products that have been certified by an NRTL, the staff has not identified a recall that was due to improper testing by an NRTL. In

addition, the staff knows of no other data showing that such testing caused product-related injuries to employees.

OSHA sought information on SDoC effectiveness during its first RFI on SDoC, but did not receive data or a rationale that demonstrated the effectiveness of SDoC in assuring product safety. Most of the respondents to the specific questions suggested instead that product safety under SDoC needs to be assured through a proper postmarket surveillance system, including marketplace and factory testing, and accreditation of laboratories engaged in the testing, even if they are affiliated with the manufacturer. Also, in its rationale, the EC points to reliance on liability laws and other protection laws for assuring an effective SDoC.

OSHA now requests information or data clearly demonstrating that product approval of electric equipment through SDoC is currently a highly protective approach, as well as a description of the measures currently in place or other measures that would need to be adopted to ensure that an SDoC system for electrical products will be highly protective to employees.

Postmarket surveillance would be a new activity for OSHA. Adequate administrative and enforcement resources and procedures in this area, based on the information obtained to date, would need to be extensive, and are critical in assuring product safety under an SDoC system. Such a system appears to include its infrastructure, along with appropriate rules for assuring SDoC effectiveness, and penalties for breaking those rules.

As indicated by the summary of the EU's SDoC system in section V, postmarket surveillance would require that OSHA have the legal authority to: establish rules requiring manufacturers and other parties to take certain actions related to issuing SDoCs; take enforcement actions such as product recalls, bans, quarantines, and confiscations; and assess financial and criminal penalties on product manufacturers, importers, or their representatives, and, perhaps, on wholesalers and retailers for selling nonconforming or dangerous products. OSHA's authority extends to the U.S. workplace and, thus, its authority regarding SDoC would presumably apply only to products actually used or intended to be used in the U.S. workplace. Further, OSHA does not have explicit authority to issue product recalls and bans, or to quarantine or confiscate nonconforming products, or to assess the sort of criminal and financial penalties described above. We further discuss the issue of authority, below, in part E.

The following questions address issues raised in this part.

VI.1. In determining whether to undertake rulemaking for SDoC, what specific measures and practices should OSHA consider adopting or requiring to provide assurance that product approvals through SDoC will be highly protective to employees? What are the major elements or components needed to assure SDoC effectiveness?

VI.2. Should OSHA rely upon other measures outside its own authority to ensure that product approvals through SDoC will be effective? For example, how should U.S. product-liability laws and consumer-protection programs, as suggested by the EC, be considered in evaluating a conformity-assessment scheme?

VI.3. In determining whether to adopt SDoC, what systems should OSHA consider establishing or using to track the effectiveness of SDoC?

VI.4. Should the U.S. consider entering into agreements with other countries to permit them to enforce SDoC requirements for products originating outside of the U.S.? What should be the minimum requirements under such agreements?

VI.5. What safety objectives and technical requirements should be met by manufacturers and others parties having obligations under an SDoC system? What tests or risk assessments should be conducted by manufacturers or other involved parties?

B. Product Risk and Specifications

The EC has requested that OSHA allow SDoC for certain electrical products, but did not specify the type of equipment or the criteria for defining this equipment. As noted earlier, the EC's system allows SDoC for products rated up to 1000 volts AC (1500 volts DC). In its rationale, the EC suggests that equipment should be eligible for SDoC if it has a low risk of noncompliance with the applicable test standard and thus poses a low risk of danger. (Ex. OSHA–2008–0032–0008, p. 1.) However, the EC provides no explanation for this concept, which raises questions about its exact meaning. It is unclear whether this equipment was determined to have a low risk of noncompliance because low risk was demonstrated by: historical data (including the reasons for noncompliance); technical factors inherent in the equipment or inherent in the test standard; the manufacturers performing the testing (*i.e.* , would they, regardless of their qualifications or actions, manufacture low-risk products); or other factors or analyses. Knowing exactly how the EC made its determination that equipment rated up to 1000 volts AC (1500 volts DC) has a low risk of noncompliance and resulting low safety risk would be helpful to OSHA, as would an explanation as to why equipment must have such low risk to be eligible for approval through SDoC. As explained earlier in section III, OSHA must ensure that equipment is a low-risk hazard to employees. Therefore, the method of conformity assessment must ensure that the hazard associated with equipment is low risk.

OSHA seeks information on the factors that define low risk of noncompliance and on methodologies that could be used to determine whether a category of electric equipment is likely to have such a low risk. We seek information on whether such an analysis has been done, or how one could be done. In this context, a noncompliant product is one that fails to meet the safety-critical elements of a test standard and, thus, would necessarily pose a danger to an employee. Noncompliance with nonsafety-critical elements is not at issue.

Certain industry organizations have argued that SDoC should be limited to products that have ''demonstrated an excellent safety record'' that support their qualification as low risk ''in the workplace.'' (Ex. OSHA–2008–0032–0019.) Although this assertion has been made for information technology products, OSHA has yet to receive the historical data supporting and/or adequately demonstrating the assertion that the safety records of any type of products justify SDoC. Also, it is unclear whether this safety record is due to low risk of nonconformity or an inherently low risk of danger in the equipment. If this claim is based upon historical data of electrical products used in the U.S., then it could be attributable to a number of factors, foremost of which could be the prevalence of third-party testing in the U.S. OSHA requests data that clearly demonstrate the safety record of this equipment, whether favorable or not, as well as information that adequately identifies the underlying reasons for this claim.

OSHA also seeks information on whether certain types of electric equipment have an inherently low risk of posing danger. In the first RFI, OSHA asked whether SDoC should be limited to ''low voltage (for example, 50 volts or less) IT equipment. * * *'' (70 FR 69359, November 15, 2005.) No comments were received addressing this concept, which we again raise here.

Specifically, we seek information on whether certain products have features that would inherently limit the risk of hazard to an employee, which may be the result of the requirements of the product-safety test standards used to evaluate the product. OSHA is aware that some standards limit the available voltage, current, and power (under normal and abnormal operating conditions) in some electrical products, thereby lowering risk to employees and others who may have access to this equipment. In these cases, OSHA seeks information on whether such products would present a low risk of hazard under the worst-case conditions of noncompliance, and thus, whether an SDoC may be an adequate tool for ensuring the safety for such products.

In addition, OSHA seeks information on the possibility of incorporating aspects of other U.S. agencies' SDoC-type systems into any system that OSHA may eventually adopt. Conformity assessment systems administered by the Federal Communications Commission (FCC) include tiered levels of conformity assessment. The FCC determines the conformity assessment procedure required based on the complexity of testing or the telecommunication system or radio-frequency interference risks associated with a nonconforming product. Such tiered systems recognize that different levels of conformity assessment are necessary for different products or standards based on the type of risks posed by noncompliance. Depending on the product or standard for which conformity is being assessed, the FCC may require evaluation and testing by an accredited third-party testing laboratory or by the FCC, or may permit SDoC. The CPSC is another U.S. agency that makes use of a conformity assessment system similar to SDoC. CPSC has used SDoC-type systems for most products under its jurisdiction. In August 2008, Congress approved the Consumer Product Safety Improvement Act (CPSIA); it mandates, among other things, that manufacturers of any children's products certify that their products under CPSC's jurisdiction meet federal requirements for consumer-product safety based on testing by an accredited independent third party. If certain conditions are met, the Act allows the CPSC to permit such testing to be conducted by the manufacturer's ''firewalled'' [6] laboratory. (Ex. OSHA–2008–0032–0018.) The following questions pertain to the issues discussed in this part.

VI.6. What data demonstrate that products sold in the EU (*i.e.* , operating at 1000V AC or 1500V DC or less) have a low risk of nonconformance with applicable standards? How is conformance being determined by the EC, and what requirements or criteria are used to judge conformance?

VI.7. What data demonstrate that products operating at these voltages, current, and power levels present low-risk electrical and fire hazards?

VI.8. In making a determination about rulemaking, how should OSHA determine which products to include under a possible SDoC system? Should OSHA consider a product's risk of harm or injury and the potential severity of harm or injury, as well as its risk of nonconformance with applicable standards? Should OSHA consider production processes (as the EU suggests in their proposal)? What methodology and factors should OSHA consider in determining risk, and what level of risk should OSHA consider acceptable? What mechanism should OSHA consider in evaluating this risk on a continuing basis?

VI.9. In considering whether to adopt SDoC, should OSHA consider only voltage for defining low risk of nonconformance, a low risk of hazard or injury, both of these factors, or other electrical variables?

VI.10. When considering voltage, current, and power as parameters for defining products which present a low risk of nonconformance and a low risk of injury or harm, should OSHA use limits published in product-specific standards (meaning that different products may have different limits), or should a single set of limits be established for all products? If a single set of limits should be established, what value should the limits be and what data are available to support the assertion that these limits would not present a risk of injury or harm to employees?

VI.11. What other types of data related to product risk should OSHA review when considering whether or not to adopt SDoC, and are these data readily available?

VI.12. Should OSHA use the type of manufacturer or industry, or a standard industry classification, in defining the appropriate parameters for products that would be eligible for SDoC?

VI.13. What justification exists for establishing a single class of electrical products for inclusion in an SDoC system? What properties do such electrical products have that distinguish them from other products such as ladders and fire doors that require third-party product certification?

VI.14. Should global test standards be used as a basis for determining conformity assessment of products (with safeguards to adjust for specific U.S. conditions) and, if so, how does this approach differ from current conformity assessment practices in the U.S.?

VI.15. Are there any aspects of other U.S. agencies' SDoC systems (*e.g.*, CPSC's ''firewalling'' authority to designate a manufacturer's lab as a third-party laboratory) that may be useful for OSHA to adopt in an SDoC system for the safety of electrical products used in the workplace? Are there differences between OSHA and these agencies that may impede or prevent adopting aspects of their SDoC system or creating a similar system?

C. Administration of an SDoC system

Information that OSHA has received from the EC and the U.S. government, industry associations, and other concerned parties indicates that an effective SDoC program requires an extensive level of government oversight of product manufacturers, importers, and distributors, and that these entities may number in the thousands. Oversight may include postmarket-surveillance activities, product recall authority, penalty assessment, a complaint-handling system, and testing and inspection of products after they are in the market. A government oversight program may also require developing and overseeing a premarket registration system for manufacturers and importers, and distributors. The EU's experience shows a successful postmarket-surveillance program must have sufficient resources in terms of number of inspectors, expertise in the wide variety of products to be regulated, and the ability to perform the tests necessary to ensure conformity. (See Ex. 1–B, pp. 20–25; Ex. OSHA–2008–0032–0011, pp. 5 and 7.) OSHA's existing budget, staff, and facilities are not adequate for such an effort.

OSHA's current NRTL Program does not include postmarket surveillance, product-recall authority, penalty assessment, postmarket testing and inspection of products, or premarket registration of products. OSHA's oversight of the program consists of recognition and audits of NRTLs, of which there are a limited number (currently 15), and investigation of

[6] According to the CPSIA, a firewalled laboratory is one that is owned, managed, or controlled by a manufacturer or private labeler but which may be accredited as a third party testing laboratory if the Commission makes certain findings that the laboratory is protected from undue influence by the manufacturer or private labeler. In addition, certain measures must be in place to report to the Commission of any attempts by this party to hide or exert undue influence over test results.

complaints. OSHA relies on the NRTLs to exert controls over manufacturers through private-sector mechanisms such as conducting factory inspections and postmarket surveillance. NRTLs conduct premarket testing or rely on other parties (including certain product manufacturers) to conduct this testing if the NRTL determines they are qualified. Thus, OSHA believes it would need to adopt fundamental changes to existing requirements under an SDoC system. In considering an SDoC system, OSHA seeks comment on the following questions that address how to administer such a system.

VI.16. What administrative systems are required to effectively run an SDoC system? How much do they cost? How would these systems interact with OSHA's existing operations? Could OSHA expect to recoup any of the costs of running an SDoC program?

VI.17. In determining whether to undertake rulemaking for SDoC, should OSHA consider accrediting third-party organizations to conduct postmarket testing or surveillance, and, if so, how? What elements of OSHA's current NRTL Program could be used to implement the accreditation process? Should current NRTLs be automatically eligible for conducting postmarket testing and surveillance under an SDoC system?

VI.18. Should OSHA consider requiring manufacturers and importers to register their products in a central database that identifies supplier-approved products? Should OSHA require manufacturers to obtain registration numbers, and require products to bear these registration numbers so that OSHA or its agents can monitor supplier-certified equipment? Should OSHA assess fees to pay for this monitoring?

VI.19. What advantages or disadvantages are there to requiring manufacturers to establish an office in the U.S. or requiring the party executing the SDoC to be located in the U.S?

VI.20. Should OSHA consider adopting SDoC as an alternative to its current third-party approval requirements, as a replacement for these requirements, or as an extension of the requirements? How can the two programs be integrated or perform complementary roles?

VI.21. What responsibilities should importers or employers have to ensure that the products they import have been properly approved under an SDoC system?

VI.22. What responsibilities should employers have to ensure that the SDoC-approved products they use have complete and accurate documentation supporting conformance, and that the product supplier has appropriately registered with OSHA or an organization identified by OSHA?

VI.23. What records or reports should OSHA require from manufacturers, importers, and distributors to ensure conformance with SDoC? Where should these records and reports be maintained? What access would OSHA need to product and production information, including foreign-produced equipment? Should OSHA consider assessing penalties for providing inaccurate or incomplete information?

VI.24. What percentage of manufacturers would continue to use third-party certification systems like the NRTL Program even if they were eligible to use SDoC?

VI.25. For manufacturers that use third-party testing for their SDoC, should OSHA recognize the results of tests performed by any accredited testing laboratory regardless of location without requiring explicit recognition by OSHA? If so, how can OSHA ensure that such laboratories are qualified to perform the testing? What regulatory measures should OSHA consider to encourage the use of accredited tests under an SDoC system?

VI.26. What obligations should manufacturers and others have to ensure that noncompliant products can be traced (*e.g.*, through marking and labeling)?

D. Costs of an SDoC System

OSHA seeks information on the costs to manufacturers associated with administering the SDoC system discussed in this RFI, as well as the cost of OSHA's NRTL Program and the EU's SDoC system. The EC raised the issue of cost in its July 2007 statement (see Ex. OSHA–2008–0032–0003) by claiming that OSHA's NRTL system costs EU exporters 1.3 billion Euros annually. The EC, however, did not provide the basis for this estimate. OSHA does not know the exact resources that would be required to effectively operate an SDoC system. The following discussion illustrates the possible costs of implementing such a system. OSHA has obtained information showing that the cost of postmarket surveillance for one relatively small EU country is 2 million Euros, which is $3 million at an exchange rate of about $1.50 per Euro. (Ex. OSHA–2008–0032–0014.) Extrapolating from this figure to the 50 U.S. states provides a rough draft estimate of approximately $180 million for implementing an SDoC system in the U.S. An estimate of the market-surveillance costs for a larger EU country is 13 million Euros or about $20 million (Ex. OSHA–2008–0032–0016). Extrapolating this figure to the 50 U.S. states for an additional rough draft estimate, implementing SDoC could cost approximately $360 million.[7] As noted above, these estimates are simply illustrative of possible costs, and OSHA is using this extrapolation to approximate the resources needed to implement an SDoC system. The level of these resources would depend on a number of factors, such as the number of manufacturers, importers, or other parties that OSHA would need to regulate; the number and type of products that might enter the workplace; and the sampling techniques and other measures that OSHA would include in an enforcement strategy. OSHA also seeks information on who should pay these costs, *i.e.*, taxpayers or, similar to the NRTL system, manufacturers, importers, or distributors through fees charged for the service.

The NRTL Program currently has an annual operating budget of approximately $1 million, and a portion of which may be reimbursed to the government by the NRTLs. The cost to manufacturers using NRTLs consists of fees charged for initial testing of the product sample, and then fees paid to the NRTLs to cover factory inspection costs and certification-mark licensing. It is difficult to derive an accurate estimate of the total costs to manufacturers from total NRTL revenues because NRTLs often perform other non-NRTL work. Therefore, OSHA seeks adequate and reliable information on the total cost of its NRTL system to manufacturers.

As noted in one of the EC project reports described in section V of this notice, inadequate budgets are a factor driving the level of surveillance performed by some EU countries under their SDoC system. As also noted, the EU has determined that the surveillance and enforcement components of systems in at least some Member States are unsatisfactory. Consequently, current figures from some EU countries may not reflect the true cost of administering an effective SDoC system. OSHA is interested in obtaining adequate and reliable information on these costs for those EU countries that have a well-

[7] The small EU country is Finland, which has a population of approximately 5 million. Using the $3 million postmarket surveillance cost results in a cost of $0.60 per person. The U.S. population is 300 million, and multiplying this figure by $0.60 per person results in a total cost of $180 million. The Netherlands, which is the larger EU country, has a population of approximately 16.5 million, resulting in a $1.20 cost per person. Thus, the estimate of the cost in the U.S., based on the per-person cost in the Netherlands, would be $360 million.

founded and effective postmarket surveillance system. The following questions solicit information on this issue.

VI.27. Are there any available data that show the annual cost to EU Member States of administering their SDoC systems (*e.g.*, number of products inspected, number of inspectors, cost of inspections, costs of inspectors' labor)? If possible, provide any available costs aggregated for the EU as a whole.

VI.28. Who should pay the operating costs, and what means should OSHA use to pay these costs? For example, what are the potential advantages and disadvantages of using appropriations, registration fees assessed to manufacturers, fines assessed against nonconforming products, or other methods to pay these costs?

VI.29. When comparing SDoC and third-party certification (in particular, OSHA's NRTL Program), are initial product-approval costs lower for one system than for the other system? If so, how much money is saved using the less expensive system?

VI.30. When comparing SDoC and third-party certification (in particular OSHA's NRTL Program), are ongoing product-approval costs lower for one system than for the other system? If so, how much money is saved using the less expensive system?

E. Enforcement of an SDoC System

SDoC systems raise a number of issues concerning enforcement schemes required by the OSH Act, including the authority the OSH Act grants to OSHA inspectors. The OSH Act currently allows inspectors the right to inspect ''any factory, plant, establishment, construction site, or other area, workplace or environment where work is performed.'' See 29 U.S.C. 657(a)(1). By way of contrast, the National Highway Transportation Safety Administration (NHTSA), which operates a manufacturer-certification program for motor vehicles, has authority to inspect motor vehicles wherever they are held for sale in interstate commerce, as well as locations where motor vehicle accidents occur. 49 U.S.C. 30166(c)(3). Thus, the NHTSA's inspection authority appears to have a broader geographical scope than OSHA's authority.

The OSH Act's enforcement scheme differs from that typically found in SDoC regimes. Under the Act, OSHA inspectors are authorized to: cite employers for violations of the OSH Act, including its associated standards and regulations; propose an assessment of a civil monetary penalty; and require abatement of the violation within a reasonable time. 29 U.S.C. 658(a). If the employer challenges the citation, abatement is not required until the Occupational Safety and Health Review Commission issues a final order on the citation. 29 U.S.C. 659(b). However, OSHA may apply to a U.S. District Court for an order requiring an employer to correct an ''imminent danger'' pending the enforcement action. 29 U.S.C. 662(a).

Compared to the scope of enforcement action granted to OSHA under the OSH Act, a wider range of enforcement tools is usually available under an SDoC system or to other U.S. government agencies. For example, the EU's General Product Safety Directive allows the responsible national authority (acting in concert with other Member State authorities and with the EC) to issue product bans, withdrawals, and recalls for ''dangerous products'' that pose a ''serious risk.'' See Directive 2001/95/EC of 3 December 2001 on General Product Safety, art. 8 & 11, 2002 O.J. (L11) 10–12; Ex. OSHA–2008–0032–0020, pp. 10–11. The EU also has established the RAPEX and ICSMS systems that advise the public of product-safety risks and nonconformities. (Ex. OSHA–2008–0032–0004, p. 11.) The NHTSA has authority to require automobile manufacturers to notify motor-vehicle purchasers and dealers of defects and nonconformity with motor-vehicle safety standards, and require motor-vehicle manufacturers to remedy defects or noncompliance. 49 U.S.C. 30118. The National Traffic and Motor Vehicle Safety (NTMVS) Act also allows the Department of Justice (DOJ) to seek an injunction in U.S. District Court to enjoin the sale of defective or nonconforming motor vehicles and equipment. 49 U.S.C. 30163(a). The FCC allows a manufacturer to use, for certain products, a declaration of conformity to assure compliance with its electromagnetic-compatibility requirements, and the Federal Communication Act gives the DOJ the authority to seize equipment made, possessed, or sold with the intent to violate the FCC's regulations. 47 U.S.C. 510.

If manufacturers are allowed to take a major role in guaranteeing the safety of their products through an SDoC system, sufficient criminal penalties for substantial violations may be necessary to sustain public confidence in this system. In this regard, a Canadian case study notes that the SDoC systems it analyzed usually had criminal penalties, though these penalties were rarely applied. (Ex. 1–B, p. 9, Docket NRTL03–SDOC.) The OSH Act makes it a crime punishable by a $10,000 fine and six-months imprisonment, on the first offense, for an ''employer who willfully violates'' an OSHA standard when the violation causes an employee's death. 29 U.S.C. 666(e). The OSH Act imposes the same penalties against ''[w]hoever knowingly makes any false statement, representation, or certification'' in documents required to be maintained by the OSH Act. 29 U.S.C. 666(g). By contrast, the NTMVS Act imposes up to 15 years imprisonment for making misrepresentations with the intent to mislead the Secretary of Transportation when complying with certain reporting requirements related to motor-vehicle safety defects that have caused death or serious bodily injury. 49 U.S.C. 30170(a).

OSHA is seeking public comment on the following questions concerning enforcement issues.

VI.31. Would OSHA's current authority grant inspectors performing SDoC postmarket surveillance sufficient geographic scope to conduct the necessary inspections, or are there other areas to which inspectors might need access that are not covered by this authority? Would OSHA inspectors need explicit statutory authority to impound or remove product samples for testing under an effective SDoC program?

VI.32. How should OSHA determine the number of inspections to perform in a given period and how should it target these inspections? What strategies should OSHA use to maximize the effectiveness and minimize the resources needed for such inspections?

VI.33. Is OSHA's current enforcement authority sufficient to support an effective SDoC system in the U.S.? Does OSHA need explicit statutory authority to issue warnings, notifications of defects or nonconformity, and/or product recalls and bans? What procedures should be available to OSHA to enforce these remedies expeditiously while avoiding inappropriate enforcement action? Are other market controls needed?

VI.34. Given the importance of accurate manufacturer declarations to an effective SDoC system, do the OSH Act's current criminal penalties, or any other applicable Federal criminal statutes, serve as a sufficient deterrent to making false declarations?

F. Effects on Trade

One of the primary reasons that the EC requested OSHA to consider SDoC is the EC's belief that the NRTL system is an unnecessary barrier to trade. Although OSHA considers the trade impacts of its requirements when developing them, it is interested in any

information or analysis regarding the effect of its NRTL approval requirements or the NRTL Program on trade.

OSHA believes that its current system facilitates trade. The NRTL Program has optional procedures in place to avoid duplicating conformity-assessment of products. These options permit the NRTLs to accept test results from other parties (including certain product manufacturers) if the NRTL determines that these parties are qualified. Through these options, if an EU manufacturer has the qualifications to do the testing or uses testing performed by a qualified test laboratory, the NRTL can rely on the testing submitted by the manufacturer and avoid retesting products. In Europe, there are 250 laboratories or manufacturers that provide testing to NRTLs. In addition, NRTLs that are members of the internationally recognized International Electrotechnical Commission Certification Body (IEC–CB) system may use testing performed by organizations accredited under that scheme. The IEC–CB system was established in large part to facilitate trade (both export and import) of electrical products. Under this system, a manufacturer in one country has its product tested by one of its country's member laboratories. This laboratory issues a test report that the manufacturer can submit to a member laboratory in another country, which will use the report to determine whether to approve the manufacturer's product for export to that country.

These various options allow NRTLs to rely on other qualified entities to perform testing and certification. These options can reduce the cost and time required to obtain product approvals by NRTLs, which in turn reduces the cost and time to market for products. A NRTL's responsibility is to ensure the accuracy of the data provided by these qualified entities. NRTLs work closely with qualified manufacturers, both large and small, to avoid any unnecessary delays and costs.

Through the following questions, OSHA seeks information on how its NRTL Program and the EU's system of conformity assessment hinders or facilitates trade.

VI.35. In considering impacts on trade, how should OSHA compare SDoC and third-party certification (in particular OSHA's NRTL Program) to determine if one system adds more value to trade than the other system? If such comparisons have been made, what is the increase in value?

VI.36. When comparing SDoC and third-party certification (in particular OSHA's NRTL Program), is there any reduction in product time to market for one system compared to other systems? If so, how much time is saved? Does the time saved vary by product? Is SDoC faster than third-party certification for some products and slower for others?

VI.37. Please provide specific examples of how each system impacts trade. Provide any data, if available, on how each system may be a barrier or a help to trade by affecting product time to market, reduced profits, or other effects.

G. Implementation Suggestions by Certain Industries

In August 2008, OSHA received a submission from three industry associations advocating that OSHA permit ''safety approvals for a limited scope of information and communication technology products to include the use of Supplier's Declaration of Conformity (SDoC) as an option to (not a replacement for) third-party certification.'' (Ex. OSHA–2008–0032–0019.) This submission compliments the EC's proposal by providing specific suggestions on how OSHA should permit and implement SDoC. While the focus of this RFI is the EC's proposal, OSHA seeks, through the following question, comments on the issues and approach outlined in this industry submission.

VI.38. If OSHA were to implement SDoC, should it follow the approach in the industry submission, either partially or completely? If partially, which industry suggestions should OSHA consider? What are the advantages and disadvantages of the industry approach? Would the industry approach affect your response to any of the other questions in this section, and, if yes, how would your response differ? In addition, please provide any comments you want on issues raised by the industry submission that are not covered by the questions in this RFI.

VII. Responding to This RFI

OSHA welcomes information, data, and comment on SDoC generally, and the EC's proposal specifically. OSHA has provided a number of questions above to provide a framework for the public to respond to this RFI. However, you can provide comment or information on any aspect of the broad areas mentioned above, and not limit your answers to the specific questions posed. In responding to the questions in this RFI, please explain the reasons supporting your views, and identify and provide the relevant information on which you rely, including data, studies, articles, and other materials. Respondents are encouraged to address any aspect of the issue on which they believe they can contribute. Please identify any organization you represent and your position with that organization, and you may describe any qualifications which you believe are relevant to your comment. You are free to provide any information that you believe would be useful to OSHA, including any data or supporting documentation. However, as noted in section I, OSHA particularly seeks comments that include specific, detailed, and credible scientific, technical, statistical, and similar data and studies that support claims made by commenters.

OSHA will review all timely comments and determine whether to initiate rulemaking or take other action with respect to SDoC, or to take no further action.

VIII. Authority and Signature

This document was prepared under the direction of Edwin G. Foulke, Jr., Assistant Secretary of Labor for Occupational Safety and Health, 200 Constitution Avenue, NW., Washington, DC 20210. This action is taken pursuant to sections 4, 6, and 8 of the Occupational Safety and Health Act of 1970 (29 U.S.C. 657), Secretary of Labor's Order No. 5–2007 (72 FR 31159), and 29 CFR Part 1911.

Signed at Washington, DC, on October 14, 2008.

Edwin G. Foulke, Jr.

Assistant Secretary of Labor for Occupational Safety and Health.

[FR Doc. E8–24826 Filed 10–17–08; 8:45 am]

BILLING CODE 4510–26–P

MORRIS K. UDALL SCHOLARSHIP AND EXCELLENCE IN NATIONAL ENVIRONMENTAL POLICY FOUNDATION, THE UNITED STATES INSTITUTE FOR ENVIRONMENTAL CONFLICT RESOLUTION

Agency Information Collection Activities; Extension of Currently Approved Information Collection; Comment Request; U.S. Institute for Environmental Conflict Resolution Application for the National Roster of Environmental Dispute Resolution and Consensus Building Professionals

AGENCY: Morris K. Udall Scholarship and Excellence in National Environmental Policy Foundation, U.S. Institute for Environmental Conflict Resolution.

ACTION: Notice.

SUMMARY: In compliance with the Paperwork Reduction Act and

supporting regulations, this document announces that the U.S. Institute for Environmental Conflict Resolution (the Institute), part of the Morris K. Udall Foundation, is submitting to the Office of Management and Budget (OMB) a request for an extension for the currently approved information collection (ICR), OMB control Number 3320–0008: Application for the National Roster of Environmental Dispute Resolution and Consensus Building, currently operating pursuant to OMB clearance issued October 25, 2005 and which expires January 31, 2009 (OMB granted extension from previous expiration date of October 31, 2008). The U.S. Institute published a **Federal Register** Notice on July 30, 2008 (73 FR 44289–44290), to solicit public comments for a 60-day period. The U.S. Institute received no comments. Thus, no changes were made to the application. The purpose of this notice is to allow an additional 30 days for public comments regarding this information collection. *Comments are invited on:* (1) Whether the proposed collection of information is necessary for the proper performance of the functions of the agency, including whether the information has practical utility; (2) the accuracy of the agency's estimate of the time spent completing the application (burden of the proposed collection of information), including the validity of the methodology and assumptions used; (3) ways to enhance the quality, utility, and clarity of the information collected; (4) ways to minimize the burden of the collection of information on those who are to respond, including through the use of appropriate automated electronic, mechanical, or other technological collection techniques or other forms of information technology.

DATES: Comments must be submitted on or before November 19, 2008.

ADDRESSES: Direct comments to: Office of Information and Regulatory Affairs, Office of Management and Budget (OMB), *Attention:* Heidi King, 725 17th Street, NW., Washington, DC 20503, Desk Officer for The Morris K. Udall Scholarship and Excellence in National Environmental Policy Foundation, U.S. Institute for Environmental Conflict Resolution, *Heidi_R._King@omb.eop.gov*.

FOR FURTHER INFORMATION CONTACT: Kathleen Docherty, Roster Manager, U.S. Institute for Environmental Conflict Resolution, 130 South Scott Ave., Tucson, Arizona 85701. *Fax:* 520–670–5530. *Phone:* 520–901–8501. *E-mail: docherty@ecr.gov*.

SUPPLEMENTARY INFORMATION:

Abstract: The U.S. Institute is a federal program established by Congress to assist parties in resolving environmental, natural resource, and public lands conflicts. The U.S. Institute serves as an impartial, non-partisan institution, and accomplishes much of its work by partnering, contracting with, or referral to, experienced practitioners. In addition, the U.S. Institute maintains the National Roster of Environmental Dispute Resolution and Consensus Building Professionals (National ECR Roster or roster). The Application for the National Roster of Environmental Dispute Resolution and Consensus Building Professionals (application) compiles data available from the resumes of environmental neutrals (mediators, facilitators, etc.) into a format that is standardized for efficient and fair eligibility review, database searches, and retrievals. The roster, the application and the related entry criteria, were developed collaboratively and with the support of the Environmental Protection Agency. A professional needs complete the application form one time. Once an application is approved, the roster member has access to update information online. The proposed collection is necessary to support ongoing maintenance of the roster and a continuous, open application process. The application and supplementary information are available from the U.S. Institute's Web site. From *http://www.ecr.gov/Resources/Roster/Roster.aspx*, choose the right-hand navigation bar link to ''Roster Application: Info and Log In''.

Burden Statement: Burden for potentially affected public: environmental dispute resolution and consensus building professionals (new respondents); existing roster members (for updating).

Proposed Frequency of Response: One initial, with voluntary updates approximately once per year.

Annual Number of Respondents: 30 (new response); 125 (update).

Time per Respondent: 2.5 hours (new response); 15 minutes (update).

Total Annual Hours Burden: 106 (new response and update combined).

Annual Cost Burden: $3,359 (new response); $1,399 (update).

Total Annual Cost Burden: $4,758 (new response and update combined); labor costs exclusively; no capital or start-up costs.

Changes in the Estimates: There are no changes in the labor hours in this ICR compared to the previous ICR. The reduction in cost figures from the previous ICR are due to use of current Bureau of Labor Statistics reports for valuing time (civilian workers category of ''professionals and related occupations'': $44.78 per hour) rather than estimated contractor rates.

(Authority: 20 U.S.C. 5601–5609)

Dated the 9th day of October 2008.

Ellen Wheeler,

Executive Director, Morris K. Udall Scholarship and Excellence in National Environmental Policy Foundation, and Federal Register Liaison Officer.

[FR Doc. E8–24835 Filed 10–17–08; 8:45 am]

BILLING CODE 6820–FN–P

NATIONAL ARCHIVES AND RECORDS ADMINISTRATION

Temporary Change in Hours at Central Plains Regional Archives, Kansas City, MO

AGENCY: National Archives and Records Administration (NARA).

ACTION: Notice.

SUMMARY: The Central Plains Regional Archives will be temporarily closed to researchers on Mondays from the week of October 20, 2008, through the week of March 30, 2009, to prepare for relocation to the new Central Plains Regional Headquarters and Regional Archives.

DATES: October 20, 2008 through March 30, 2009.

ADDRESSES: The current address is NARA Central Plains Regional Archives, 2312 East Bannister Road, Kansas City, MO 64131. The new address will be Central Plains Regional Headquarters and Regional Archives, 400 West Pershing Road, Kansas City, MO.

FOR FURTHER INFORMATION CONTACT: Diana Duff at 816–268–8013.

SUPPLEMENTARY INFORMATION: In April 2009, the Central Plains Regional Archives will move to a new facility at the Union Station complex in Kansas City. The new facility will greatly improve public access to archival records and ensure that the archival records are stored under proper environmental conditions. In addition, some of the Region's less frequently used archival holdings are being moved to NARA's Lee's Summit, MO, facility. The temporary, once-weekly closure will allow staff to complete activities necessary for the move, such as reboxing, description, and holdings maintenance. The actual shipping of records will take place through March 2009. During the move, there may be delays in retrieving records that are in transit. A listing of records in transit is

posted and regularly updated on the NARA Web site at *http://www.archives.gov/central-plains/kansas-city/records-unavailable.html.*

Dated: October 14, 2008.

Thomas E. Mills,

Assistant Archivist for Regional Records Services.

[FR Doc. E8–24933 Filed 10–17–08; 8:45 am]

BILLING CODE 7515–01–P

NATIONAL CREDIT UNION ADMINISTRATION

Agency Information Collection Activities: Submission to OMB for a New Collection; Comment Request

AGENCY: National Credit Union Administration (NCUA).

ACTION: Request for comment.

SUMMARY: The NCUA is submitting the following information collection to the Office of Management and Budget (OMB) for review and clearance under the Paperwork Reduction Act of 1995 (Pub. L. 104–13, 44 U.S.C. Chapter 35). This information collection is published to obtain comments from the public.

DATES: Comments will be accepted until November 19, 2008.

ADDRESSES: Interested parties are invited to submit written comments to the NCUA Clearance Officer listed below:

Clearance Officer: Mr. Jeryl Fish, National Credit Union Administration, 1775 Duke Street, Alexandria, VA 22314–3428, Fax No. 703–837–2861, *E-mail: OCIOMail@ncua.gov.*

FOR FURTHER INFORMATION CONTACT: Requests for additional information or a copy of the information collection request should be directed to Tracy Sumpter at the National Credit Union Administration, 1775 Duke Street, Alexandria, VA 22314–3428, or at (703) 518–6444.

SUPPLEMENTARY INFORMATION: Proposal for the following collection of information:

Title: Large Credit Union Financials and Board Packages.

OMB Number: 3133–NEW.

Form Number: None.

Type of Review: New collection.

Description: The region needs the information to effectively monitor financial trends and emerging issues of federally insured credit unions (FICUs) $1 billion or greater between onsite visitations. These institutions present greater risk to the NCUSIF due to their asset size and complexity.

Respondents: Federally insured credit unions (FICUs) with $1 billion or greater in assets.

Estimated No. of Respondents/Record keepers: 30.

Estimated Burden Hours per Response: ½ hour (30 minutes).

Frequency of Response: Monthly.

Estimated Total Annual Burden Hours: 180 hours.

Estimated Total Annual Cost: 0.

By the National Credit Union Administration Board on October 15, 2008.

Mary Rupp,

Secretary of the Board.

[FR Doc. E8–24847 Filed 10–17–08; 8:45 am]

BILLING CODE 7535–01–P

NATIONAL SCIENCE FOUNDATION

Notice of Permit Applications Received Under the Antarctic Conservation Act of 1978 (Pub. L. 95–541)

AGENCY: National Science Foundation.

ACTION: Notice of Permit Applications Received under the Antarctic Conservation Act of 1978, Public Law 95–541.

SUMMARY: The National Science Foundation (NSF) is required to publish notice of permit applications received to conduct activities regulated under the Antarctic Conservation Act of 1978. NSF has published regulations under the Antarctic Conservation Act at Title 45 Part 670 of the Code of Federal Regulations. This is the required notice of permit applications received.

DATES: Interested parties are invited to submit written data, comments, or views with respect to this permit application by November 19, 2008. This application may be inspected by interested parties at the Permit Office, address below.

ADDRESSES: Comments should be addressed to Permit Office, Room 755, Office of Polar Programs, National Science Foundation, 4201 Wilson Boulevard, Arlington, Virginia 22230.

FOR FURTHER INFORMATION CONTACT: Nadene G. Kennedy at the above address or (703) 292–7405.

SUPPLEMENTARY INFORMATION: The National Science Foundation, as directed by the Antarctic Conservation Act of 1978 (Pub. L. 95–541), as amended by the Antarctic Science, Tourism and Conservation Act of 1996, has developed regulations for the establishment of a permit system for various activities in Antarctica and designation of certain animals and certain geographic areas a requiring special protection. The regulations establish such a permit system to designate Antarctic Specially Protected Areas.

The applications received are as follows:

Permit Application No. 2009–021

1. *Applicant:* Michael Bartalos, 30 Ramona Avenue, #2, San Francisco, CA 94103.

Activity for Which Permit Is Requested

Enter Antarctic Specially Protected Areas (ASPA's). The applicant is a participant in the USAP Artists and Writer's Program and plans to visit the historic huts (ASPA 155—Cape Evans, ASPA 157—Backdoor Bay, Cape Royds and ASPA 158 Hut Point, Ross Island) in order to take photographs and videos of the physical materials that comprise the structures and their contents. The applicant will research and report (in a blog) on the extent to which their inhabitants might have re-used and recycled the materials.

Location

McMurdo Sound region, Antarctica.

Dates

December 30, 2008 to January 30, 2009.

Nadene G. Kennedy,

Permit Officer, Office of Polar Programs.

[FR Doc. E8–24846 Filed 10–17–08; 8:45 am]

BILLING CODE 7555–01–P

NATIONAL SCIENCE FOUNDATION

Notice of Permits Issued Under the Antarctic Conservation Act of 1978

AGENCY: National Science Foundation.

ACTION: Notice of permits issued under the Antarctic Conservation Act of 1978, Public Law 95–541.

SUMMARY: The National Science Foundation (NSF) is required to publish notice of permits issued under the Antarctic Conservation Act of 1978. This is the required notice.

FOR FURTHER INFORMATION CONTACT: Nadene G. Kennedy, Permit Office, Office of Polar Programs, Rm. 755, National Science Foundation, 4201 Wilson Boulevard, Arlington, VA 22230.

SUPPLEMENTARY INFORMATION: On August 29, September 2, and September 3, 2008, the National Science Foundation published notices in the **Federal Register** of permit applications received. Permits were issued on October 10, 2008 to:

Permit No. 2009 WM–003

Olav Malver, Explorer's Corner

Permit No. 2009 WM–004

David Rootes, Antarctic Logistics & Expeditions

Permit No. 2009–013

Robert Pittman

Nadene G. Kennedy,

Permit Officer.

[FR Doc. E8–24875 Filed 10–17–08; 8:45 am]

BILLING CODE 7555–01–P

NUCLEAR REGULATORY COMMISSION

[Docket Nos. 52–014–COL and 52–015–COL; ASLBP No. 08–864–02–COL–BD01]

Atomic Safety and Licensing Board Panel; In the Matter of Tennessee Valley Authority (Bellefonte Nuclear Power Plant Units 3 and 4); Notice of Hearing (Application for Combined Operating License)

October 14, 2008.

Before the Licensing Board: G. Paul Bollwerk, III, Chairman; Dr. Anthony J. Baratta; Dr. William W. Sager.

This proceeding concerns the October 30, 2007 application of the Tennessee Valley Authority (TVA) for a 10 CFR Part 52 combined operating license (COL). This TVA COL application seeks approval for the construction and operation of two new nuclear reactors on the existing Bellefonte Nuclear Power Plant site near Scottsboro, Alabama. In response to a February 8, 2008 notice of hearing and opportunity to petition for leave to intervene, 73 FR 7611 (Feb. 8, 2008), as amended by Commission order on April 7, 2008, 73 *id.* 19,904 (Apr. 11, 2008), on June 6, 2008, the Southern Alliance for Clean Energy (SACE), the Blue Ridge Environmental Defense League (BREDL), and BREDL's Bellefonte Efficiency and Sustainability Team (BEST) chapter (collectively Joint Petitioners) filed a request for hearing and petition to intervene contesting the TVA COL application. On June 12, 2008, the Commission referred the petition to the Atomic Safety and Licensing Board Panel to conduct any subsequent adjudication. On June 18, 2008, a three-member Atomic Safety and Licensing Board was established to preside over the contested portion of this COL proceeding. *See* 73 FR 35,714 (June 24, 2008).[1]

On July 30, 2008, the Board conducted a one-day initial prehearing conference in Scottsboro, Alabama, during which it heard oral presentations regarding the standing of each of the Joint Petitioners, the timeliness of their hearing petition, and the admissibility of their twenty-four proffered contentions. Thereafter, in a September 12, 2008 issuance, finding that Joint Petitioners SACE and BREDL had established the requisite standing to intervene in this proceeding and that they had timely submitted four admissible contentions concerning the TVA COL application, the Board admitted these two entities as parties to this proceeding. *See Tennessee Valley Authority* (Bellefonte Nuclear Power Plant Units 3 and 4), LBP–08–16, 68 NRC_____ (Sept. 12, 2008).

In light of the foregoing, please take notice that a hearing will be conducted in this proceeding. Subject to any Board determination regarding any request to utilize formal hearing procedures under 10 CFR Part 2, Subpart G, *see* 10 CFR 2.310(d), the hearing on contested matters will be governed by the informal hearing procedures set forth in 10 CFR Part 2, Subparts C and L, 10 CFR 2.300–2.390, 2.1200–12.1213.

During the course of this contested proceeding, the Board may conduct an oral argument, as provided in 10 CFR 2.331, may hold additional prehearing conferences pursuant to 10 CFR 2.329, and may conduct evidentiary hearings in accordance with 10 CFR 2.327–2.328, 2.1206–2.1208. The public is invited to attend any oral argument, prehearing conference, or evidentiary hearing. Notices of those sessions will be published in the **Federal Register** and/or made available to the public at the NRC Public Document Room (PDR), located at One White Flint North, 11555 Rockville Pike (first floor), Rockville, Maryland, and through the NRC Web site, *http://www.nrc.gov.*

Additionally, as provided in 10 CFR 2.315(a), any person not a party to the proceeding may submit a written limited appearance statement. Limited appearance statements, which are placed in the docket for the hearing, provide members of the public with an opportunity to make the Board and/or the participants aware of their concerns about matters at issue in the proceeding. A written limited appearance statement can be submitted at any time and should be sent to the Office of the Secretary using one of the methods prescribed below:

Mail to: Office of the Secretary, Rulemakings and Adjudications Staff, U.S. Nuclear Regulatory Commission, Washington, DC 20555–0001.

Fax to: (301) 415–1101 (verification (301) 415–1966).

E-mail to: hearingdocket@nrc.gov.

In addition, a copy of the limited appearance statement should be sent to the Licensing Board Chairman using the same method at the address below:

Mail to: Administrative Judge G. Paul Bollwerk, III, Atomic Safety and Licensing Board Panel, Mail Stop T–3F23, U.S. Nuclear Regulatory Commission, Washington, DC 20555–0001.

Fax to: (301) 415–5599 (verification (301) 415–7550).

E-mail to: gpb@nrc.gov.

At a later date, the Board may entertain oral limited appearance statements at a location or locations in the vicinity of the proposed site for Bellefonte Units 3 and 4. Notice of any oral limited appearance sessions will be published in the **Federal Register** and/or made available to the public at the NRC PDR and on the NRC Web site, *www.nrc.gov.*

Documents relating to this proceeding are available for public inspection at the Commission's PDR or electronically from the publicly available records component of NRC's document system (ADAMS). ADAMS is accessible from the NRC Web site at *http://www.nrc.gov/reading-rm/adams.html* (the Public Electronic Reading Room). Persons who do not have access to ADAMS, or who encounter problems in accessing the documents located in ADAMS, should contact the NRC PDR Reference staff by telephone at 1–800–397–4209, 301–415–4737, or by e-mail to *pdr@nrc.gov.*

It is so *ordered.*

For the Atomic Safety and Licensing Board.[2]

[1] Consistent with section 189a.(1)(A) of the Atomic Energy Act, 42 U.S.C. 2239(a)(1)(A), in connection with the TVA Bellefonte COL application the agency also must conduct a ''mandatory'' or ''uncontested'' hearing in which it will receive evidence from TVA and the NRC staff regarding matters raised by the presiding officer concerning the conduct of the staff's safety and environmental reviews. During that mandatory hearing, the presiding officer will explore issues associated with the Bellefonte COL application that are not the subject of this ''contested'' proceeding regarding the Joint Petitioners contentions admitted for litigation, and will make a determination concerning the adequacy of the staff's safety and environmental reviews, as well as certain independent National Environmental Policy Act findings. *See* 10 CFR 52.97(a)(1). Current Commission policy calls for the Commission itself to conduct the mandatory hearing for the Bellefonte Units 3 and 4 COL application. *See* Memorandum to Luis A. Reyes, Executive Dir. for Operations, Karen D. Cyr, General Counsel, Frank P. Gillespie, Executive Dir., Advisory Comm. on Reactor Safeguards, from Annette L. Vietti-Cook, Secretary of the Comm'n, Staff Requirements—COMDEK–07–0001/COMJSM–07–0001—Report of the Combined License Review Task Force at 1 (June 22, 2007) (ADAMS Accession No. ML071760109).

[2] Copies of this notice of hearing were sent this date by the agency's E-Filing system to the counsel/representatives for (1) Applicant TVA; (2) Joint Intervenors SACE and BREDL; and (3) the staff.

Dated: October 14, 2008.

G. Paul Bollwerk, III,

Chairman, Rockville, Maryland.

[FR Doc. E8–24892 Filed 10–17–08; 8:45 am]

BILLING CODE 7590–01–P

NUCLEAR REGULATORY COMMISSION

[Docket No. 50–346]

FirstEnergy Nuclear Operating Company; Davis-Besse Nuclear Power Station, Unit No. 1; Environmental Assessment and Finding of No Significant Impact

The U.S. Nuclear Regulatory Commission (the Commission, NRC) is considering issuance of an amendment for Facility Operating License No. NPF–3, issued to FirstEnergy Nuclear Operating Company (the licensee, FENOC), for operation of the Davis-Besse Nuclear Power Station, Unit No. 1 (DBNPS) located in Ottawa County, Ohio. Pursuant to Title 10 of the *Code of Federal Regulations* (10 CFR) Sections 51.21 and 51.32, the NRC is issuing this environmental assessment and finding of no significant impact. The Notice of Consideration of Issuance of Amendment was published in the **Federal Register** (FR) on May 22, 2008 (73 FR 29787).

Environmental Assessment

Identification of the Proposed Action

The proposed action would be a full conversion from the current technical specifications (CTS) to the improved technical specifications (ITS) consistent with improved standard technical specifications as described in ''Standard Technical Specifications Babcock and Wilcox Plants,'' Revision 3.0 (STS) (Agencywide Documents Access and Management System (ADAMS) Accession No. ML041800598). STS Revision 3.0 consists of the following NRC approved TS Task Force Travelers (TSTFS) TSTF–369 Revision 1, TSTF–372 Revision 4, TSTF–400 Revision 1, TSTF–439 Revision 2, TSTF–449 Revision 4, TSTF–479 Revision 0, TSTF–482 Revision 0, and TSTF–485 Revision 0. The proposed action also encompasses the beyond scope issues included in the Notice of Consideration of Issuance of Amendment.

The proposed action is in accordance with the licensee's application dated August 3, 2007 (ADAMS Accession No. ML072200448), as supplemented by letters dated May 16, 2008 (2 letters) (ADAMS Accession Nos. ML081480464 and ML081430105), July 23, 2008 (ADAMS Accession No. ML082070079), August 7, 2008 (ADAMS Accession No. ML082270658), August 26, 2008 (ADAMS Accession No. ML082600594), and September 3, 2008 (ADAMS Accession No. ML082490154). The information provided to the Nuclear Regulatory Commission (NRC) staff through the joint NRC-FirstEnergy Nuclear Operating Company improved technical specifications (ITS) conversion web page hosted by Excel Services Corporation can be found in these supplements. To expedite its review of the application, the NRC staff issued its requests for additional information (RAI) through the DBNPS ITS Conversion web page and the licensee addressed the RAI by providing responses on the web page. Entry into the database is protected so that only the licensee and NRC reviewers can enter information into the database to add RAIs (NRC) or provide responses to the RAIs (licensee); however, the public can enter the database to read the questions asked and the responses provided. To be in compliance with the regulations for written communications for license amendment requests, and to have the database on the DBNPS dockets before the amendment is issued, the licensee will submit a copy of the database in a submittal to the NRC after there are no further RAIs and before the amendment is issued. The public can access the Web site by going to *http://www.excelservices.com.* Once at the Web site, click on ''Davis Besse'' on the left side of the screen. Upon clicking the link, the Web site will inform you that ''you are about to enter the DAVIS BESSE Improved Technical Specification Licensing On-Line Question and Answer Database.'' At this point, click on ''Click Here to continue.'' This will bring you to the ITS Licensing Database. The RAIs and responses to RAIs are organized by ITS Sections 1.0, 2.0, 3.0, 3.1 through 3.9, 4.0, and 5.0. For every listed ITS section, there is a RAI which can be read by clicking on the ITS section number. The RAI question(s) and the licensee's response(s) are contained on the same web page.

The Need for the Proposed Action

The Commission's ''Proposed Policy Statement on Technical Specifications Improvements for Nuclear Power Reactors'' (52 FR 3788), dated February 6, 1987, contained an Interim Policy Statement that set forth objective criteria for determining which regulatory requirements and operating restrictions should be included in the technical specifications (TS). When it issued the Interim Policy Statement, the Commission also requested comments on it. Subsequently, to implement the Interim Policy Statement, each reactor vendor owners group and the NRC staff began developing STS for reactors supplied by each vendor. The Commission then published its ''Final Policy Statement on Technical Specifications Improvements for nuclear Power reactors'' (58 FR 39132), dated July 22, 1993, in which it addressed comments received on the Interim Policy Statement, and incorporated experience in developing the STS. The Final Policy Statement formed the basis for a revision to 10 CFR 50.36 (60 FR 36953), dated July 19, 1995, that codified the criteria for determining the content of TS. The NRC Committee to Review Generic Requirements reviewed the STS, made note of their safety merits, and indicated its support of conversion by operating plants to the STS. For DBNPS, NUREG–1430 Revision 3.0 and the following NRC approved TSTF–369 Revision 1, TSTF–372 Revision 4, TSTF–400 Revision 1, TSTF–439 Revision 2, TSTF–449 Revision 4, TSTF–479 Revision 0, TSTF–482 Revision 0, and TSTF–485 Revision 0, document the STS and form the basis for DBNPS conversion to the ITS.

The proposed changes to the CTS are based on NUREG–1430 and the guidance provided in the Final Policy Statement. The objective of this action is to rewrite, reformat, and streamline the CTS (i.e., to convert the CTS to the ITS). Emphasis was placed on human factors principles to improve clarity and understanding. The ITS Bases section has been significantly expanded to clarify and better explain the purpose and foundation of each specification. In addition to NUREG–1430, portions of the CTS were also used as the basis for the development of the DBNPS ITS. The NRC staff discussed plant-specific issues (i.e., unique design features, requirements, and operating practices) with the licensee.

Relocated specifications include those changes to the CTS that relocate certain requirements which do not meet the 10 CFR 50.36 selection criteria. These requirements may be relocated to the Bases section, updated safety analysis report, core operating limits report, operational quality assurance plan, plant procedures, or other licensee-controlled documents. Relocating requirements to licensee-controlled documents does not eliminate them, but rather, places them under more appropriate regulatory controls (i.e., 10 CFR 50.54(a)(3), and 10 CFR 50.59) to manage their implementation and future changes.

The proposed action is necessary to allow the licensee to implement the ITS. The ITS are based on standard Babcock and Wilcox TSs. They are considered an improvement over the CTS.

Environmental Impacts of the Proposed Action

The NRC has completed its safety evaluation of the proposed action and concludes that the proposed TS conversion would not increase the probability or consequences of accidents previously analyzed and would not affect facility radiation levels or facility radiological effluents due to the fact that no physical facility is being affected. The details of the staff's safety evaluation will be provided in the license amendment. Specifically, the proposed TS changes will not increase the probability or consequences of accidents. No changes are being made in the types or amounts of any effluent that may be released offsite, and there is no significant increase in the allowable individual or cumulative occupational radiation exposure. Therefore, there are no significant radiological environmental impacts associated with the proposed action.

With regard to potential nonradiological impacts, the proposed action does not have a potential to affect any historic sites because no previously undisturbed area will be affected by the proposed TS changes. It does not affect nonradiological plant effluents and has no other environmental impact. No physical facility is being affected by this change. Therefore, there are no significant nonradiological environmental impacts associated with the proposed action. Accordingly, the NRC concludes that there are no significant environmental impacts associated with the proposed action and, thus, the proposed action will not have any significant impact to the human environment.

Environmental Impacts of the Alternatives to the Proposed Action

As an alternative to the proposed action, the staff considered denial of the proposed action (i.e., the ''no-action'' alternative). Denial of the application would result in no change in current environmental impacts. The environmental impacts of the proposed action and the alternative action are similar.

Alternative Use of Resources

The action does not involve the use of any different resources than those previously considered in the Final Environmental Statement for the DBNPS, dated October 31, 1975.

Agencies and Persons Consulted

On July 14, 2008, the NRC staff consulted with the Ohio State official, Carol O'Claire of the Department of Public Safety, regarding the environmental impact of the proposed action. The State official had no comments.

Finding of No Significant Impact

On the basis of the environmental assessment, the NRC concludes that the proposed action will not have a significant effect on the quality of the human environment. Accordingly the NRC has determined not to prepare an environmental impact statement for the proposed action.

For further details with respect to the proposed action, see the licensee's letter dated August 3, 2007 (ADAMS Accession No. ML072200448), as supplemented by letters dated May 16, 2008 (2 letters) (ADAMS Accession Nos. ML081480464 and ML081430105), July 23, 2008 (ADAMS Accession No. ML082070079), August 7, 2008 (ADAMS Accession No. ML082270658), August 26, 2008 (ADAMS Accession No. ML082600594), and September 3, 2008 (ADAMS Accession No. ML082490154). The information provided to the Nuclear Regulatory Commission (NRC) staff through the joint NRC-FirstEnergy Nuclear Operating Company improved technical specifications (ITS) conversion web page hosted by Excel Services Corporation can be found in these supplements. Documents may be examined, and/or copied for a fee, at the NRC's Public Document Room (PDR), located at One White Flint North, Public File Area O1 F21, 11555 Rockville Pike (first floor), Rockville, Maryland. Publicly available records will be accessible electronically from the ADAMS Public Electronic Reading Room on the Internet at the NRC Web site, *http://www.nrc.gov/reading-rm/adams.html.* Persons who do not have access to ADAMS or who encounter problems in accessing the documents located in ADAMS should contact the NRC PDR Reference staff by telephone at 1–800–397–4209 or 301–415–4737, or send an e-mail to *pdr@nrc.gov.*

Dated at Rockville, Maryland, this 8th day of October 2008.

For the Nuclear Regulatory Commission.

Cameron S. Goodwin,

Project Manager, Plant Licensing Branch III–2, Division of Operating Reactor Licensing, Office of Nuclear Reactor Regulation.

[FR Doc. E8–24899 Filed 10–17–08; 8:45 am]

BILLING CODE 7590–01–P

SECURITIES AND EXCHANGE COMMISSION

[Release No. 34–58765; File No. 4–551]

Program for Allocation of Regulatory Responsibilities Pursuant to Rule 17d–2; Notice of Filing and Order Approving and Declaring Effective an Amendment to the Plan for the Allocation of Regulatory Responsibilities Among the American Stock Exchange LLC, Boston Stock Exchange, Inc., Chicago Board Options Exchange, Incorporated, International Securities Exchange, LLC, Financial Industry Regulatory Authority, Inc., The NASDAQ Stock Market LLC, NYSE Arca, Inc., and NASDAQ OMX PHLX, Inc., Relating to Options Market Surveillance

October 9, 2008.

Notice is hereby given that the Securities and Exchange Commission (''Commission'') has issued an Order, pursuant to Section 17(d) of the Securities Exchange Act of 1934 (''Act''),[1] approving and declaring effective an amendment to the plan for allocating regulatory responsibility (''Plan'') filed pursuant to Rule 17d–2 of the Act,[2] by the American Stock Exchange LLC (''Amex''), Boston Stock Exchange, Inc. (''BSE''), Chicago Board Options Exchange, Incorporated (''CBOE''), International Securities Exchange, LLC (''ISE''), Financial Industry Regulatory Authority, Inc. (''FINRA''), The NASDAQ Stock Market LLC (''NASDAQ''), NYSE Arca, Inc. (''NYSE Arca''), and NASDAQ OMX PHLX, Inc. (''Phlx'') (collectively, ''SRO Participants'') concerning options-related market surveillance.

I. Introduction

Section 19(g)(1) of the Act,[3] among other things, requires every self-regulatory organization (''SRO'') registered as either a national securities exchange or national securities association to examine for, and enforce compliance by, its members and persons associated with its members with the Act, the rules and regulations thereunder, and the SRO's own rules, unless the SRO is relieved of this responsibility pursuant to Section 17(d)[4] or Section 19(g)(2)[5] of the Act. Without this relief, the statutory obligation of each individual SRO could result in a pattern of multiple examinations of broker-dealers that

[1] 15 U.S.C. 78q(d).
[2] 17 CFR 240.17d–2.
[3] 15 U.S.C. 78s(g)(1).
[4] 15 U.S.C. 78q(d).
[5] 15 U.S.C. 78s(g)(2).

maintain memberships in more than one SRO (''common members''). Such regulatory duplication would add unnecessary expenses for common members and their SROs.

Section 17(d)(1) of the Act[6] was intended, in part, to eliminate unnecessary multiple examinations and regulatory duplication.[7] With respect to a common member, Section 17(d)(1) authorizes the Commission, by rule or order, to relieve an SRO of the responsibility to receive regulatory reports, to examine for and enforce compliance with applicable statutes, rules, and regulations, or to perform other specified regulatory functions.

To implement Section 17(d)(1), the Commission adopted two rules: Rule 17d–1 and Rule 17d–2 under the Act.[8] Rule 17d–1 authorizes the Commission to name a single SRO as the designated examining authority (''DEA'') to examine common members for compliance with the financial responsibility requirements imposed by the Act, or by Commission or SRO rules.[9] When an SRO has been named as a common member's DEA, all other SROs to which the common member belongs are relieved of the responsibility to examine the firm for compliance with the applicable financial responsibility rules. On its face, Rule 17d–1 deals only with an SRO's obligations to enforce member compliance with financial responsibility requirements. Rule 17d–1 does not relieve an SRO from its obligation to examine a common member for compliance with its own rules and provisions of the federal securities laws governing matters other than financial responsibility, including sales practices and trading activities and practices.

To address regulatory duplication in these and other areas, the Commission adopted Rule 17d–2 under the Act.[10] Rule 17d–2 permits SROs to propose joint plans for the allocation of regulatory responsibilities with respect to their common members. Under paragraph (c) of Rule 17d–2, the Commission may declare such a plan effective if, after providing for notice and comment, it determines that the plan is necessary or appropriate in the public interest and for the protection of investors, to foster cooperation and coordination among the SROs, to remove impediments to, and foster the development of, a national market system and a national clearance and settlement system, and is in conformity with the factors set forth in Section 17(d) of the Act. Commission approval of a plan filed pursuant to Rule 17d–2 relieves an SRO of those regulatory responsibilities allocated by the plan to another SRO.

II. The Plan

On December 11, 2007, the Commission declared effective the SRO Participants' Plan for allocating regulatory responsibilities pursuant to Rule 17d–2.[11] On April 11, 2008, the Commission approved an amendment to the Plan to include NASDAQ as a participant.[12] The Plan is designed to reduce regulatory duplication for common members by allocating regulatory responsibility for certain options-related market surveillance matters among the SRO Participants.[13] Generally, under the current Plan, an SRO Participant will serve as the Designated Options Surveillance Regulator (''DOSR'') for each common member assigned to it and will assume regulatory responsibility with respect to that common member's compliance with applicable common rules for certain accounts. When an SRO has been named as a common member's DOSR, all other SROs to which the common member belongs will be relieved of regulatory responsibility for that common member, pursuant to the terms of the Plan, with respect to the applicable common rules specified in Exhibit A to the Plan.

III. Proposed Amendment to the Plan

On October 1, 2008, the SRO Participants submitted a proposed amendment to the Plan. The purpose of the amendment is to clarify that the term Regulatory Responsibility for options position limits includes examination responsibilities for the delta hedging exemption. Specifically, the SRO Participants intend that FINRA will conduct examinations for the delta hedging exemption for all common members that are members of FINRA notwithstanding the fact that FINRA's position limit rule is, in some cases, limited to only firms that are not members of an options exchange (*i.e.*, access members). In such cases, FINRA's examinations for the delta hedging exemption will be for the position limit rule(s) of the other SRO Participant(s). Examinations for the delta hedging exemption for common members that are non-FINRA members will be conducted by the same SRO Participant conducting position limit surveillance as provided in Exhibit B to the Plan. In addition, Exhibit A to the Plan has been updated to reflect the addition of options position limit rules as common rules. Accordingly, regulatory responsibility for a common member's compliance with the options position limit rules included in Exhibit A to the Plan will be allocated to the applicable DOSR as provided by the amended Plan. The amended agreement replaces the previous agreement in its entirety. The text of the proposed amended 17d–2 Plan is as follows (additions are italicized; deletions are [bracketed]):

* * * * *

Agreement by and Among the American Stock Exchange LLC, the Boston Stock Exchange, Inc., the Chicago Board Options Exchange, Incorporated, the International Securities Exchange LLC, Financial Industry Regulatory Authority, Inc., Nyse Arca, Inc., The Nasdaq Stock Market LLC, and [the Philadelphia Stock Exchange] *NASDAQ OMX PHLX*, Inc., Pursuant to Rule 17d–2 Under the Securities Exchange Act of 1934

This agreement (this ''Agreement''), by and among the American Stock Exchange LLC (''Amex''), the Boston Stock Exchange, Inc. (''BSE''), the Chicago Board Options Exchange, Incorporated (''CBOE''), the International Securities Exchange LLC (''ISE''), Financial Industry Regulatory Authority, Inc. (''FINRA''), NYSE Arca, Inc. (''Arca''), The NASDAQ Stock Market LLC (''Nasdaq''), and the [Philadelphia Stock Exchange] *NASDAQ OMX PHLX*, Inc. (''PHLX''), is made this 10th day of October, 2007, and as amended [this] *the* 31st day of March, 2008, *and this 1st day of October, 2008*, pursuant to Section 17(d) of the Securities Exchange Act of 1934, as amended (the ''Exchange Act''), and Rule 17d–2 thereunder (''Rule 17d–2''),

[6] 15 U.S.C. 78q(d)(1).

[7] *See* Securities Act Amendments of 1975, Report of the Senate Committee on Banking, Housing, and Urban Affairs to Accompany S. 249, S. Rep. No. 94–75, 94th Cong., 1st Session 32 (1975).

[8] 17 CFR 240.17d–1 and 17 CFR 240.17d–2, respectively.

[9] *See* Securities Exchange Act Release No. 12352 (April 20, 1976), 41 FR 18808 (May 7, 1976).

[10] *See* Securities Exchange Act Release No. 12935 (October 28, 1976), 41 FR 49091 (November 8, 1976).

[11] *See* Securities Exchange Act Release No. 56941 (December 11, 2007), 72 FR 71723 (December 18, 2007) (File No. 4–551).

[12] *See* Securities Exchange Act Release No. 57649 (April 11, 2008), 73 FR 20976 (April 17, 2008) (File No. 4–551).

[13] The Plan is wholly separate from the multiparty options agreement made pursuant to Rule 17d–2 by and among Amex, BSE, CBOE, ISE, FINRA, New York Stock Exchange LLC, NASDAQ, NYSE Arca, and Phlx involving the allocation of regulatory responsibilities with respect to common members for options-related sales practice matters relating to the conduct of broker-dealers of accounts for listed options or index warrants. *See* Securities Exchange Act Release Nos. 57987 (June 18, 2008), 73 FR 36156 (June 25, 2008) (File No. S7–966).

which allows for a joint plan among self-regulatory organizations (''SROs'') to allocate regulatory obligations with respect to brokers or dealers that are members of two or more of the parties to this Agreement (''Common Members''). The Amex, BSE, CBOE, ISE, FINRA, Arca, Nasdaq, and PHLX are collectively referred to herein as the ''Participants'' and individually, each a ''Participant.'' This Agreement shall be administered by a committee known as the Options Surveillance Group (the ''OSG'' or ''Group''), as described in Section V hereof. Unless defined in this Agreement or the context otherwise requires, the terms used herein shall have the meanings assigned thereto by the Exchange Act and the rules and regulations thereunder.

Whereas, the Participants desire to eliminate regulatory duplication with respect to SRO market surveillance of Common Member [11] activities with regard to certain common rules relating to listed options (''Options''); and

Whereas, for this purpose, the Participants desire to execute and file this Agreement with the Securities and Exchange Commission (the ''SEC'' or ''Commission'') pursuant to Rule 17d–2.

Now, Therefore, in consideration of the mutual covenants contained in this Agreement, the Participants agree as follows:

I. Except as otherwise provided in this Agreement, each Participant shall assume Regulatory Responsibility (as defined below) for the Common Members that are allocated or assigned to such Participant in accordance with the terms of this Agreement and shall be relieved of its Regulatory Responsibility as to the remaining Common Members. For purposes of this Agreement, a Participant shall be considered to be the Designated Options Surveillance Regulator (''DOSR'') for each Common Member that is allocated to it in accordance with Section VII.

II. As used in this Agreement, the term ''Regulatory Responsibility'' shall mean surveillance, investigation and enforcement responsibilities relating to compliance by the Common Members with such Options rules of the Participants as the Participants shall determine are substantially similar and shall approve from time to time, insofar as such rules relate to market surveillance (collectively, the ''Common Rules''). For the purposes of this Agreement the list of Common Rules is attached as Exhibit A hereto, which may only be amended upon unanimous written agreement by the Participants. The DOSR assigned to each Common Member shall assume Regulatory Responsibility with regard to that Common Member's compliance with the applicable Common Rules for certain accounts.[12] A DOSR may perform its Regulatory Responsibility or enter an agreement to transfer or assign such responsibilities to a national securities exchange registered with the SEC under Section 6(a) of the Exchange Act or a national securities association registered with the SEC under Section 15A of the Exchange Act. A DOSR may not transfer or assign its Regulatory Responsibility to an association registered for the limited purpose of regulating the activities of members who are registered as brokers or dealers in security futures products.

The term ''Regulatory Responsibility'' does not include, and each Participant shall retain full responsibility with respect to:

(a) surveillance, investigative and enforcement responsibilities other than those included in the definition of Regulatory Responsibility;

(b) any aspects of the rules of a Participant that are not substantially similar to the Common Rules or that are allocated for a separate surveillance purpose under any other agreement made pursuant to Rule 17d–2. Any such aspects of a Common Rule will be noted as excluded on Exhibit A.

With respect to options position limits, the term Regulatory Responsibility shall include examination responsibilities for the delta hedging exemption. Specifically, the Participants intend that FINRA will conduct examinations for delta hedging for all Common Members that are members of FINRA notwithstanding the fact that FINRA's position limit rule is, in some cases, limited to only firms that are not members of an options exchange (i.e., access members). In such cases, FINRA's examinations for delta hedging options position limit violations will be for the identical or substantively similar position limit rule(s) of the other Participant(s). Examinations for delta hedging for Common Members that are non-FINRA members will be conducted by the same Participant conducting position limit surveillance. The allocation of Common Members to DOSRs for surveillance of compliance with options position limits and other agreed to Common Rules is provided in Exhibit B. The allocation of Common Members to DOSRs for examinations of the delta hedging exemption under the options position limits rules is provided in Exhibit C.

III. Each year within 30 days of the anniversary date of the commencement of operation of this Agreement, or more frequently if required by changes in the rules of a Participant, each Participant shall submit to the other Participants, through the Chair of the OSG, an updated list of Common Rules for review. This updated list may add Common Rules to Exhibit A, shall delete from Exhibit A rules of that Participant that are no longer identical or substantially similar to the Common Rules, and shall confirm that the remaining rules of the Participant included on Exhibit A continue to be identically or substantially similar to the Common Rules. Within 30 days from the date that each Participant has received revisions to Exhibit A from the Chair of the OSG, each Participant shall confirm in writing to the Chair of the OSG whether that Participant's rules listed in Exhibit A are Common Rules.

IV. Apparent violation of another Participant's rules discovered by a DOSR, but which rules are not within the scope of the discovering DOSR's Regulatory Responsibility, shall be referred to the relevant Participant for such action as is deemed appropriate by that Participant.

Notwithstanding the foregoing, nothing contained herein shall preclude a DOSR in its discretion from requesting that another Participant conduct an investigative or enforcement proceeding (''Proceeding'') on a matter for which the requesting DOSR has Regulatory Responsibility. If such other Participant agrees, the Regulatory Responsibility in such case shall be deemed transferred to the accepting Participant and confirmed in writing by the Participants involved. Additionally, nothing in this Agreement shall prevent another Participant on whose market potential violative activity took place from conducting its own Proceeding on a matter. The Participant conducting the Proceeding shall advise the assigned DOSR. Each Participant agrees, upon request, to make available promptly all relevant files, records and/or witnesses necessary to assist another Participant in a Proceeding.

V. The OSG shall be composed of one representative designated by each of the Participants (a ''Representative''). Each Participant shall also designate one or more persons as its alternate representative(s) (an ''Alternate Representative''). In the absence of the Representative, the Alternate

[11] In the case of the BSE, members are those persons who are Options Participants (as defined in the Boston Options Exchange LLC Rules).

[12] Certain accounts shall include customer (''C'' as classified by the Options Clearing Corporation (''OCC'')) and firm (''F'' as classified by OCC) accounts, as well as other accounts, such as market maker accounts as the Participants shall, from time to time, identify as appropriate to review.

Representative shall assume the powers, duties and responsibilities of the Representative. Each Participant may at any time replace its Representative and/or its Alternate Representative to the Group.[13] A majority of the OSG shall constitute a quorum and, unless otherwise required, the affirmative vote of a majority of the Representatives present (in person, by telephone or by written consent) shall be necessary to constitute action by the Group. The Group will have a Chair, Vice Chair and Secretary. A different Participant will assume each position on a rotating basis for a one-year term. In the event that a Participant replaces a Representative who is acting as Chair, Vice Chair or Secretary, the newly appointed Representative shall assume the position of Chair, Vice Chair, or Secretary (as applicable) vacated by the Participant's former Representative. In the event a Participant cannot fulfill its duties as Chair, the Participant serving as Vice Chair shall substitute for the Chair and complete the subject unfulfilled term. All notices and other communications for the OSG are to be sent in care of the Chair and, as appropriate, to each Representative.

VI. The OSG shall determine the times and locations of Group meetings, provided that the Chair, acting alone, may also call a meeting of the Group in the event the Chair determines that there is good cause to do so. To the extent reasonably possible, notice of any meeting shall be given at least ten business days prior to the meeting date. Representatives shall always be given the option of participating in any meeting telephonically at their own expense rather than in person.

VII. No less frequently than every two years, in such manner as the Group deems appropriate, the OSG shall allocate Common Members that conduct an Options business among the Participants (''Allocation''), and the Participant to which a Common Member is allocated will serve as the DOSR for that Common Member. Any Allocation shall be based on the following principles, except to the extent all affected Participants consent to one or more different principles:

(a) The OSG may not allocate a Common Member to a Participant unless the Common Member is a member of that Participant.

(b) To the extent practicable, Common Members that conduct an Options business shall be allocated among the Participants of which they are members in such manner as to equalize as nearly as possible the allocation among such Participants, provided that no Common Members shall be allocated to FINRA. For example, if sixteen Common Members that conduct an Options business are members only of three Participants, none of which is FINRA, those Common Members shall be allocated among the three Participants such that no Participant is allocated more than six such members and no Participant is allocated less than five such members. If, in the previous example, one of the three Participants is FINRA, the sixteen Common Members would be allocated evenly between the remaining Participants, so that the two non-FINRA Participants would be allocated eight Common Members each.

(c) To the extent practicable, Allocation shall take into account the amount of Options activity conducted by each Common Member in order to most evenly divide the Common Members with the largest amount of activity among the Participants of which they are members. Allocation will also take into account similar allocations pursuant to other plans or agreements to which the Common Members are party to maintain consistency in oversight of the Common Members.[14]

(d) To the extent practicable, Allocation of Common Members to Participants will be rotated among the applicable Participants such that a Common Member shall not be allocated to a Participant to which that Common Member was allocated within the previous two years. The assignment of DOSRs pursuant to the Allocation is attached as Exhibit B hereto, and will be updated from time to time to reflect Common Member Allocation changes.

(e) The Group may reallocate Common Members from time-to-time, as it deems appropriate.

(f) Whenever a Common Member ceases to be a member of its DOSR, the DOSR shall promptly inform the Group, which shall review the matter and allocate the Common Member to another Participant.

(g) A DOSR may request that a Common Member to which it is assigned be reallocated to another Participant by giving 30 days written notice to the Chair of the OSG. The Group, in its discretion, may approve such request and reallocate the Common Member to another Participant.

(h) All determinations by the Group with respect to Allocation shall be made by the affirmative vote of a majority of the Participants that, at the time of such determination, share the applicable Common Member being allocated; a Participant shall not be entitled to vote on any Allocation relating to a Common Member unless the Common Member is a member of such Participant.

VIII. Each DOSR shall conduct routine surveillance reviews to detect violations of the applicable Common Rules by each Common Member allocated to it with a frequency (daily, weekly, monthly, quarterly, semi-annually or annually as noted on Exhibit A) not less than that determined by the Group. The other Participants agree that, upon request, relevant information in their respective files relative to a Common Member will be made available to the applicable DOSR. *In addition, each Participant shall provide, to the extent not otherwise already provided, information pertaining to its surveillance program that would be relevant to FINRA or the Participant(s) conducting routine examinations for the delta hedging exemption.*

At each meeting of the OSG, each Participant shall be prepared to report on the status of its surveillance program for the previous quarter and any period prior thereto that has not previously been reported to the Group. In the event a DOSR believes it will not be able to complete its Regulatory Responsibility for its allocated Common Members, it will so advise the Group in writing promptly. The Group will undertake to remedy this situation by reallocating the subject Common Members among the remaining Participants. In such instance, the Group may determine to impose a regulatory fee for services provided to the DOSR that was unable to fulfill its Regulatory Responsibility.

IX. Each Participant will, upon request, promptly furnish a copy of the report or applicable portions thereof relating to any investigation made pursuant to the provisions of this Agreement to each other Participant of which the Common Member under investigation is a member.

X. Each Participant will routinely populate a common database, to be accessed by the Group relating to any formal regulatory action taken during the course of a Proceeding with respect to the Common Rules concerning a Common Member.

XI. Any written notice required or permitted to be given under this Agreement shall be deemed given if sent by certified mail, return receipt requested, to any Participant to the attention of that Participant's Representative, to the Participant's principal place of business or by e-mail at such address as the Representative

[13] A Participant must give notice to the Chair of the Group of such a change.

[14] For example, if one Participant was allocated a Common Member by another regulatory group that Participant would be assigned to be the DOSR of that Common Member, unless there is good cause not to make that assignment.

shall have filed in writing with the Chair.

XII. The costs incurred by each Participant in discharging its Regulatory Responsibility under this Agreement are not reimbursable. However, any of the Participants may agree that one or more will compensate the other(s) for costs incurred.

XIII. The Participants shall notify the Common Members of this Agreement by means of a uniform joint notice approved by the Group. Each Participant will notify the Common Members that have been allocated to it that such Participant will serve as DOSR for that Common Member.

XIV. This Agreement shall be effective upon approval of the Commission. This Agreement may only be amended in writing duly approved by each Participant. All amendments to this Agreement, excluding changes to Exhibits A, *B* and [B]*C*, must be filed with and approved by the Commission.

XV. Any Participant may manifest its intention to cancel its participation in this Agreement at any time upon providing written notice to (i) the Group six months prior to the date of such cancellation, or such other period as all the Participants may agree, and (ii) the Commission. Upon receipt of the notice the Group shall allocate, in accordance with the provisions of this Agreement, those Common Members for which the canceling Participant was the DOSR. The canceling Participant shall retain its Regulatory Responsibility and other rights, privileges and duties pursuant to this Agreement until the Group has completed the reallocation as described above, and the Commission has approved the cancellation.

XVI. The cancellation of its participation in this Agreement by any Participant shall not terminate this Agreement as to the remaining Participants. This Agreement will only terminate following notice to the Commission, in writing, by the then Participants that they intend to terminate the Agreement and the expiration of the applicable notice period. Such notice shall be given at least six months prior to the intended date of termination, or such other period as all the Participants may agree. Such termination will become effective upon Commission approval.

XVII. Participation in the Group shall be strictly limited to the Participants and no other party shall have any right to attend or otherwise participate in the Group except with the unanimous approval of all Participants. Notwithstanding the foregoing, any national securities exchange registered with the SEC under Section 6(a) of the Act or any national securities association registered with the SEC under section 15A of the Act may become a Participant to this Agreement provided that: (i) Such applicant has adopted rules substantially similar to the Common Rules, and received approval thereof from the SEC; (ii) such applicant has provided each Participant with a signed statement whereby the applicant agrees to be bound by the terms of this Agreement to the same effect as though it had originally signed this Agreement and (iii) an amended agreement reflecting the addition of such applicant as a Participant has been filed with and approved by the Commission.

XVIII. This Agreement is wholly separate from the multiparty Agreement made pursuant to Rule 17d-2 by and among the Amex, BSE, CBOE, ISE, NASD, the New York Stock Exchange, LLC, Arca and PHLX involving the allocation of regulatory responsibilities with respect to common members for compliance with common rules relating to the conduct by broker-dealers of accounts for listed options or index warrants entered into on December 1, 2006, and as may be amended from time to time.

Limitation of Liability

No Participant nor the Group nor any of their respective directors, governors, officers, employees or representatives shall be liable to any other Participant in this Agreement for any liability, loss or damage resulting from or claimed to have resulted from any delays, inaccuracies, errors or omissions with respect to the provision of Regulatory Responsibility as provided hereby or for the failure to provide any such Regulatory Responsibility, except with respect to such liability, loss or damages as shall have been suffered by one or more of the Participants and caused by the willful misconduct of one or more of the other Participants or its respective directors, governors, officers, employees or representatives. No warranties, express or implied, are made by the Participants, individually or as a group, or by the OSG with respect to any Regulatory Responsibility to be performed hereunder.

Relief From Responsibility

Pursuant to Section 17(d)(1)(A) of the Exchange Act and Rule 17d-2, the Participants join in requesting the Commission, upon its approval of this Agreement or any part thereof, to relieve the Participants that are party to this Agreement and are not the DOSR as to a Common Member of any and all Regulatory Responsibility with respect to the matters allocated to the DOSR.

This Agreement may be executed in any number of counterparts, each of which shall be deemed to be an original, but all such counterparts shall together constitute one and the same Agreement.

In Witness Whereof, the Participants hereto have executed this Agreement as of the date and year first above written.

* * * * *

OPTIONS SURVEILLANCE GROUP
17d–2

Exhibit A

COMMON RULES

SRO	Description of rule	Exchange rule number	Frequency of review
Violation I: Expiring Exercise Declarations (EED)—For Listed Equity Options Expiring: the Third Saturday Following the Third Friday of a Month, Quarterly, AND for Listed FLEX Options			
Amex	Exercise of Options Contracts	[Amex] Rule 980	At Expiration.
BOX	Exercise of Options Contracts	[BOX] Rule 7.1	At Expiration.
CBOE	Exercise of Options Contracts	[CBOE] Rule 11.1	At Expiration.
FINRA	Exercise of Options Contracts	NASD Rule 2860	At Expiration.
ISE	Exercise of Options Contracts	[ISE] Rule 1100	At Expiration.
Nasdaq	Exercise of Options Contracts	Nasdaq Chapter VIII, Sec.1	At Expiration.
NYSEArca	Exercise of Options Contracts	[NYSEArca] Rule 6.24	At Expiration.
PHLX	Exercise of Equity Options Contracts	[PHLX] Rule 1042	At Expiration.
Violation II: Position Limits. (PL)—For Listed Equity Options Expiring: The Third Saturday Following The Third Friday of a Month, Quarterly			

COMMON RULES—Continued

SRO	Description of rule	Exchange rule number	Frequency of review
Amex	Position Limits.	Rule 904	Daily.
	Liquidating Positions.	Rule 907	As Needed.
BOX	Position Limits.	Chapter III, Section 7	Daily.
	Exemptions from Position	Chapter III, Section 8	As Needed.
	Liquidation Positions.	Chapter III, Section 11	As Needed.
CBOE	Position Limits.	Rule 4.11	Daily.
	Liquidation of Positions.	Rule 4.14	As Needed.
FINRA	Position Limits.	NASD Rule 2860(b)(3)	Daily.
	Liquidation of Positions. and Restrictions on Access	NASD Rule 2860(b)(6)	As Needed.
ISE	Position Limits.	Rule 412	Daily.
	Exemptions from Position Limits.	Rule 413	As Needed.
	Liquidating Positions.	Rule 416	As Needed.
Nasdaq	Position Limits.	Nasdaq Rule Chapter III Section 7.	Daily.
	Exemptions from Position Limits.	Nasdaq Rule Chapter III Section 8.	As Needed.
	Liquidating Positions.	Nasdaq Rule Chapter III Section 11.	As Needed.
NYSEArca	Position Limits.	Rule 6.8	Daily.
	Liquidation of Position	Rule 6.7	As Needed.
PHLX	Position Limits.	Rule 1001	Daily.
	Liquidation of Positions.	Rule 1004	As Needed.

* * * * *

IV. Solicitation of Comments

Interested persons are invited to submit written data, views, and arguments concerning the foregoing. Comments may be submitted by any of the following methods:

Electronic Comments

- Use the Commission's Internet comment form (*http://www.sec.gov/rules/other.shtml*); or
- Send an e-mail to *rule-comments@sec.gov*. Please include File Number 4–551 on the subject line.

Paper Comments

- Send paper comments in triplicate to Secretary, Securities and Exchange Commission, Station Place, 100 F Street, NE., Washington, DC 20549–1090.

All submissions should refer to File Number 4–551. This file number should be included on the subject line if e-mail is used. To help the Commission process and review your comments more efficiently, please use only one method. The Commission will post all comments on the Commission's Internet Web site (*http://www.sec.gov/rules/other.shtml*). Copies of the submission, all subsequent amendments, all written statements with respect to the proposed plan that are filed with the Commission, and all written communications relating to the proposed plan between the Commission and any person, other than those that may be withheld from the public in accordance with the provisions of 5 U.S.C. 552, will be available for inspection and copying in the Commission's Public Reference Room, on official business days between the hours of 10 a.m. and 3 p.m. Copies of the plan also will be available for inspection and copying at the principal offices of Amex, BSE, CBOE, ISE, FINRA, NASDAQ, NYSE Arca, and Phlx. All comments received will be posted without change; the Commission does not edit personal identifying information from submissions. You should submit only information that you wish to make available publicly. All submissions should refer to File Number 4–551 and should be submitted on or before November 10, 2008.

V. Discussion

The Commission continues to believe that the Plan, as proposed to be amended, is an achievement in cooperation among the SRO Participants, and will reduce unnecessary regulatory duplication by allocating to the designated SRO the responsibility for certain options-related market surveillance matters that would otherwise be performed by multiple SROs. The Plan promotes efficiency by reducing costs to firms that are members of more than one of the SRO Participants. In addition, because the SRO Participants coordinate their regulatory functions in accordance with the Plan, the Plan promotes, and will continue to promote, investor protection.

Under paragraph (c) of Rule 17d–2, the Commission may, after appropriate notice and comment, declare a plan, or any part of a plan, effective. In this instance, the Commission believes that appropriate notice and comment can take place after the proposed amendment is effective. The Commission notes that the SRO Participants have separately determined to add options position limit rules to the list of common rules included in Exhibit A to the Plan.[14] To cover the full scope of regulatory responsibilities associated with these new position limit common rules, the SRO Participants have proposed to add language to the Plan to clarify the allocation of examination responsibilities with respect to the delta hedging exemption from options position limits. The amended Plan allocates to FINRA the examination responsibilities with respect to the delta hedging exemption for all common members that are members of FINRA, and allocates to the applicable DOSR the examination responsibilities with respect to the delta hedging exemption for common members that are not members of FINRA. In addition, to facilitate the ability of FINRA or a DOSR to perform examination responsibilities with regard to the position limit rules, the amended Plan states that each SRO Participant shall provide information pertaining to its surveillance program that would be relevant to FINRA or the applicable DOSR conducting routine examinations for the delta hedging exemption. By declaring it effective today, the amended Plan can become effective and be implemented without undue delay.

[14] *See* Section XIV of the Plan (regarding amendments to the Plan).

VI. Conclusion

This order gives effect to the amended Plan submitted to the Commission that is contained in File No. 4–551.

It is therefore ordered, pursuant to Section 17(d) of the Act,[15] that the Plan, as amended, made by and between Amex, BSE, CBOE, ISE, FINRA, NASDAQ, NYSE Arca, and Phlx filed with the Commission pursuant to Rule 17d–2 on October 1, 2008 is hereby approved and declared effective.

It is further ordered that those SRO Participants that are not the DOSR as to a particular common member are relieved of those regulatory responsibilities allocated to the common member's DOSR under the amended Plan to the extent of such allocation.

It is further ordered that the SRO Participants are relieved of the examination responsibilities with respect to the delta hedging exemption from options position limits for all common members allocated to FINRA under the amended Plan to the extent of such allocation.

For the Commission, by the Division of Trading and Markets, pursuant to delegated authority.[16]

Florence E. Harmon,

Acting Secretary.

[FR Doc. E8–24740 Filed 10–17–08; 8:45 am]

BILLING CODE 8011–01–P

[15] 15 U.S.C. 78q(d).

[16] 17 CFR 200.30–3(a)(34).

SECURITIES AND EXCHANGE COMMISSION

[Release No. 34–58771; File No. SR–CBOE–2008–101]

Self-Regulatory Organizations; Chicago Board Options Exchange, Incorporated; Notice of Filing and Immediate Effectiveness of Proposed Rule Change to Delete Chapter XXX and References to Chapter XXX Throughout the CBOE Rulebook

October 10, 2008.

Pursuant to Section 19(b)(1) of the Securities Exchange Act of 1934 (the ''Act'')[1] and Rule 19b–4 thereunder,[2] notice is hereby given that on October 6, 2008, the Chicago Board Options Exchange, Incorporated (''Exchange'' or ''CBOE'') filed with the Securities and Exchange Commission (the ''Commission'') the proposed rule change as described in Items I and II below, which Items have been prepared by the Exchange. The Exchange filed the proposal as a ''non-controversial'' proposed rule change pursuant to Section 19(b)(3)(A)(iii) of the Act[3] and Rule 19b–4(f)(6) thereunder.[4] The Commission is publishing this notice to solicit comments on the proposed rule change from interested persons.

I. Self-Regulatory Organization's Statement of the Terms of Substance of the Proposed Rule Change

CBOE proposes to delete Chapter XXX (Trading in Stocks, Warrants and Other Securities) from the CBOE Rulebook. In addition, CBOE proposes to delete references to Chapter XXX rules throughout the CBOE Rulebook. The text of the rule proposal is available on the Exchange's Web site (*http://www.cboe.org/legal*), at the Exchange's Office of the Secretary and at the Commission.

II. Self-Regulatory Organization's Statement of the Purpose of, and Statutory Basis for, the Proposed Rule Change

In its filing with the Commission, the self-regulatory organization included statements concerning the purpose of and basis for the proposed rule change and discussed any comments it received on the proposed rule change. The text of those statements may be examined at the places specified in Item IV below. The Exchange has prepared summaries, set forth in sections A, B, and C below, of the most significant parts of such statements.

A. Self-Regulatory Organization's Statement of the Purpose of, and Statutory Basis for, the Proposed Rule Change

1. Purpose

The purpose of this proposed rule change is to delete Chapter XXX (Trading in Stocks, Warrants and Other Securities) from the CBOE Rulebook.[5] In addition, CBOE proposes to delete references to Chapter XXX rules throughout the CBOE Rulebook. Chapter XXX governed the trading of non-option securities traded on CBOE's stand-alone stock platform in an open-outcry environment. All non-option securities that previously traded under Chapter XXX now trade pursuant to Chapters L through LIV.[6] Consequently, it is no longer necessary to include Chapter XXX in the CBOE Rulebook, and the chapter will be deleted in its entirety, along with all references to Chapter XXX rules throughout the CBOE Rulebook.[7]

2. Statutory Basis

The Exchange believes that the proposed rule change is consistent with the requirements provided under Section 6(b)(5)[8] of the Act, that the rules of an exchange be designed to promote just and equitable principles of trade, to prevent fraudulent and manipulative acts and, in general, to protect investors and the public interest.

B. Self-Regulatory Organization's Statement on Burden on Competition

CBOE does not believe that the proposed rule change will impose any burden on competition not necessary or appropriate in furtherance of the purposes of the Act.

C. Self-Regulatory Organization's Statement on Comments on the Proposed Rule Change Received From Members, Participants or Others

No written comments were solicited or received with respect to the proposed rule change.

III. Date of Effectiveness of the Proposed Rule Change and Timing for Commission Action

Because the foregoing proposed rule change does not: (1) Significantly affect the protection of investors or the public interest; (2) impose any significant burden on competition; and (3) become operative for 30 days from the date on which it was filed, or such shorter time as the Commission may designate if consistent with the protection of investors and the public interest, it has become effective pursuant to Section 19(b)(3)(A) of the Act[9] and Rule 19b-4(f)(6) thereunder.[10] At any time within

[1] 15 U.S.C. 78s(b)(1).

[2] 17 CFR 240.19b–4.

[3] 15 U.S.C. 78s(b)(3)(A)(iii).

[4] 17 CFR 240.19b-4(f)(6).

[5] Chapter XXX was adopted in 1990. *See* Securities Exchange Act Release No. 28556 (October 19, 1990), 55 FR 43233 (October 26, 1990) (SR–CBOE–90–08).

[6] Chapters L through LIV govern the trading of non-option securities on the CBOE Stock Exchange (CBSX), a screen-based facility of CBOE.

[7] The Exchange is also proposing to amend the Introduction paragraph to Chapter L, which references Chapter XXX. In addition, the Exchange is replacing references to Chapter 55 with Chapter 54 in the Introduction paragraph for Chapter L and in the Appendix A to Chapters 50 to 54, since Chapter 55 was previously deleted. *See* Securities Exchange Act Release No. 55034 (December 29, 2006), 72 FR 1350 (January 11, 2007) (notice for SR–CBOE–2006–112) (filing, among other things, deleted all rules (Chapter LV) regarding the Intermarket Trading Systems); *see* also Securities Exchange Act Release No. 55392 (March 2, 2007), 73 FR 10572 (March 8, 2007) (approval order for SR–CBOE–2006–112).

[8] 15 U.S.C. 78s(b)(5).

[9] 15 U.S.C. 78s(b)(3)(A).

[10] 17 CFR 240.19b–4(f)(6). In addition, when filing a proposed rule change pursuant to Rule 19b–4(f)(6) under the Act, an Exchange is required to give the Commission written notice of its intent to file the proposed rule change, along with a brief description and text of the proposed rule change, at least five business days prior to the date of filing

60 days of the filing of such proposed rule change, the Commission may summarily abrogate such rule change if it appears to the Commission that such action is necessary or appropriate in the public interest, for the protection of investors, or otherwise in furtherance of the purposes of the Act.

IV. Solicitation of Comments

Interested persons are invited to submit written data, views, and arguments concerning the foregoing, including whether the proposed rule change is consistent with the Act. Comments may be submitted by any of the following methods:

Electronic Comments

- Use the Commission's Internet comment form (*http://www.sec.gov/rules/sro.shtml*); or
- Send an e-mail to *rule-comments@sec.gov*. Please include File Number SR-CBOE–2008–101 on the subject line.

Paper Comments

- Send paper comments in triplicate to Secretary, Securities and Exchange Commission, 100 F Street, NE., Washington, DC 20549–1090.

All submissions should refer to File Number SR–CBOE–2008–101. This file number should be included on the subject line if e-mail is used. To help the Commission process and review your comments more efficiently, please use only one method. The Commission will post all comments on the Commission's Internet Web site (*http://www.sec.gov/rules/sro.shtml*). Copies of the submission, all subsequent amendments, all written statements with respect to the proposed rule change that are filed with the Commission, and all written communications relating to the proposed rule change between the Commission and any person, other than those that may be withheld from the public in accordance with the provisions of 5 U.S.C. 552, will be available for inspection and copying in the Commission's Public Reference Room, 100 F Street, NE., Washington, DC 20549, on official business days between the hours of 10 a.m. and 3 p.m. Copies of the filing also will be available for inspection and copying at the principal office of the CBOE. All comments received will be posted without change; the Commission does not edit personal identifying information from submissions. You should submit only information that you wish to make available publicly. All submissions should refer to File Number SR–CBOE–2008–101 and should be submitted on or before November 10, 2008.

For the Commission, by the Division of Trading and Markets, pursuant to delegated authority.[11]

Florence E. Harmon,

Acting Secretary.

[FR Doc. E8–24738 Filed 10–17–08; 8:45 am]

BILLING CODE 8011–01–P

of the proposed rule change, or such shorter time as designated by the Commission. The Exchange provided such notice to the Commission.

[11] 17 CFR 200.30–3(a)(12).

SECURITIES AND EXCHANGE COMMISSION

[Release No. 34–58763; File No. SR–CBOE–2008–106]

Self-Regulatory Organizations; Chicago Board Options Exchange, Incorporated; Notice of Filing and Immediate Effectiveness of Proposed Rule Change To Increase the Class Quoting Limit in One Option Class

October 9, 2008.

Pursuant to Section 19(b)(1) of the Securities Exchange Act of 1934 (the ''Act''),[1] and Rule 19b–4 thereunder,[2] notice is hereby given that on October 8, 2008, the Chicago Board Options Exchange, Incorporated (''CBOE'' or ''Exchange'') filed with the Securities and Exchange Commission (''Commission'') the proposed rule change as described in Items I, II, and III below, which Items have been prepared by the CBOE. The Exchange has designated this proposal as one constituting a stated policy, practice, or interpretation with respect to the meaning, administration, or enforcement of an existing rule under Section 19(b)(3)(A)(i) of the Act, and Rule 19b–4(f)(1) thereunder, which renders the proposal effective upon filing with the Commission. The Commission is publishing this notice to solicit comments on the proposed rule change from interested persons.

I. Self-Regulatory Organization's Statement of the Terms of Substance of the Proposed Rule Change

The Exchange proposes to increase the class quoting limit in one option class. The text of the proposed rule change is available on CBOE's Web site (*http://www.cboe.org/legal*), at the CBOE's Office of the Secretary, and at the Commission's public reference room.

[1] 15 U.S.C. 78s(b)(1).

[2] 17 CFR 240.19b–4.

II. Self-Regulatory Organization's Statement of the Purpose of, and Statutory Basis for, the Proposed Rule Change

In its filing with the Commission, the Exchange included statements concerning the purpose of and basis for the proposed rule change and discussed any comments it received on the proposed rule change. The text of these statements may be examined at the places specified in Item IV below. The Exchange has prepared summaries, set forth in sections (A), (B), and (C) below, of the most significant parts of such statements.

A. Self-Regulatory Organization's Statement of the Purpose of, and Statutory Basis for, the Proposed Rule Change

1. Purpose

CBOE Rule 8.3A, Maximum Number of Market Participants Quoting Electronically per Product, establishes class quoting limits (''CQLs'') for each class traded on the Hybrid Trading System.[3] A CQL is the maximum number of quoters that may quote electronically in a given product and Rule 8.3A, Interpretation .01(a) provides that the current levels are generally established at 50.

In addition, Rule 8.3A, Interpretation .01(b) provides a procedure by which the President of the Exchange may increase the CQL for an existing or new product. In this regard, the President of the Exchange may increase the CQL in a particular product when he deems it appropriate. The effect of an increase in the CQL is procompetitive in that it increases the number of market participants that may quote electronically in a product. The purpose of this filing is to increase the CQL in the option class Wachovia Corp. (WB) from its current limit of 50 to 65.

Given the unusual market conditions in the past several weeks, CBOE's President has determined that it would be appropriate to increase the CQL in WB. Increasing the CQL to 65 will accommodate Market-Makers that are currently on the wait-list to be appointed to the option class, and will enable the Exchange to enhance the liquidity offered, thereby offering deeper and more liquid markets. Lastly, CBOE represents that it has the systems capacity to support this increase in the CQL.

2. Statutory Basis

CBOE believes the proposed rule change is consistent with the Act and

[3] See Rule 8.3A.01.

the rules and regulations under the Act applicable to a national securities exchange and, in particular, the requirements of section 6(b) of the Act.[4] Specifically, the Exchange believes the proposed rule change is consistent with the Section 6(b)(5)[5] requirements that the rules of an exchange be designed to promote just and equitable principles of trade, to prevent fraudulent and manipulative acts and, in general, to protect investors and the public interest. As indicated above, the Exchange believes that increasing the CQL in this option class will enable the Exchange to enhance the liquidity offered, thereby offering deeper and more liquid markets.

B. Self-Regulatory Organization's Statement on Burden on Competition

CBOE does not believe that the proposed rule change will impose any burden on competition not necessary or appropriate in furtherance of the purposes of the Exchange Act.

C. Self-Regulatory Organization's Statement on Comments on the Proposed Rule Change Received From Members, Participants, or Others

The Exchange neither received nor solicited written comments on the proposal.

III. Date of Effectiveness of the Proposed Rule Change and Timing for Commission Action

The foregoing proposed rule change will take effect upon filing with the Commission pursuant to Section 19(b)(3)(A)(i) of the Act[6] and Rule 19b–4(f)(1) thereunder,[7] because it constitutes a stated policy, practice, or interpretation with respect to the meaning, administration, or enforcement of an existing rule.

At any time within 60 days of the filing of the proposed rule change, the Commission may summarily abrogate such rule change if it appears to the Commission that such action is necessary or appropriate in the public interest, for the protection of investors, or otherwise in furtherance of the purposes of the Act.

IV. Solicitation of Comments

Interested persons are invited to submit written data, views, and arguments concerning the foregoing, including whether the proposed rule change is consistent with the Act. Comments may be submitted by any of the following methods:

Electronic Comments

- Use the Commission's Internet comment form (*http://www.sec.gov/rules/sro.shtml*); or
- Send an e-mail to *rule-comments@sec.gov*. Please include File Number SR–CBOE–2008–106 on the subject line.

Paper Comments

- Send paper comments in triplicate to Secretary, Securities and Exchange Commission, 100 F Street, NE., Washington, DC 20549–1090.

All submissions should refer to File Number SR–CBOE–2008–106. This file number should be included on the subject line if e-mail is used. To help the Commission process and review your comments more efficiently, please use only one method. The Commission will post all comments on the Commission's Internet Web site (*http://www.sec.gov/rules/sro.shtml*). Copies of the submission, all subsequent amendments, all written statements with respect to the proposed rule change that are filed with the Commission, and all written communications relating to the proposed rule change between the Commission and any person, other than those that may be withheld from the public in accordance with the provisions of 5 U.S.C. 552, will be available for inspection and copying in the Commission's Public Reference Room, 100 F Street, NE., Washington, DC 20549, on official business days between the hours of 10 a.m and 3 p.m. Copies of such filing also will be available for inspection and copying at the principal office of the CBOE. All comments received will be posted without change; the Commission does not edit personal identifying information from submissions. You should submit only information that you wish to make available publicly.

All submissions should refer to File Number SR–CBOE–2008–106 and should be submitted on or before November 10, 2008.

For the Commission, by the Division of Trading and Markets, pursuant to delegated authority.[8]

Florence E. Harmon,

Acting Secretary.

[FR Doc. E8–24752 Filed 10–17–08; 8:45 am]

BILLING CODE 8011–01–P

[4] 15 U.S.C. 78(f)(b).

[5] 15 U.S.C. 78(f)(b)(5).

[6] 15 U.S.C. 78s(b)(3)(A)(i).

[7] 17 CFR 240.19b–4(f)(1).

[8] 17 CFR 200.30–3(a)(12).

SECURITIES AND EXCHANGE COMMISSION

[Release No. 34–58758; File No. SR–NYSE–2008–100]

Self-Regulatory Organizations; New York Stock Exchange LLC; Notice of Filing and Immediate Effectiveness of a Proposed Rule Change To Amend NYSE Rule 123B.30 (Exchange Automated Order Routing System) To Align the Rule Governing Sponsored Access to the Exchange With the Current Industry Standard

October 8, 2008.

Pursuant to Section 19(b)(1) of the Securities Exchange Act of 1934 (''Act'')[1] and Rule 19b–4 thereunder,[2] notice is hereby given that on October 2, 2008, the New York Stock Exchange LLC (''NYSE'' or ''Exchange'') filed with the Securities and Exchange Commission (''Commission'') the proposed rule change as described in Items I and II below, which Items have been prepared by the Exchange. The Exchange has designated the proposed rule change as a ''non-controversial'' rule change pursuant to Section 19(b)(3)(A) of the Act[3] and Rule 19b–4(f)(6) thereunder,[4] which renders the proposed rule change effective upon filing with the Commission. The Commission is publishing this notice to solicit comments on the proposed rule change from interested persons.

I. Self-Regulatory Organization's Statement of the Terms of Substance of the Proposed Rule Change

The Exchange proposes to amend NYSE Rule 123B.30 (Exchange Automated Order Routing System) to align its rule governing sponsored access to the Exchange with the current industry standard. The text of the proposed rule change is available at NYSE, the Commission's Public Reference Room, and *http://www.nyse.com*.

II. Self-Regulatory Organization's Statement of the Purpose of, and Statutory Basis for, the Proposed Rule Change

In its filing with the Commission, the self-regulatory organization included statements concerning the purpose of, and basis for, the proposed rule change and discussed any comments it received on the proposed rule change. The text of those statements may be examined at the places specified in Item IV below.

[1] 15 U.S.C. 78s(b)(1).

[2] 17 CFR 240.19b–4.

[3] 15 U.S.C. 78s(b)(3)(A).

[4] 17 CFR 240.19b–4(f)(6).

The Exchange has prepared summaries, set forth in sections A, B, and C below, of the most significant aspects of such statements.

A. Self-Regulatory Organization's Statement of the Purpose of, and Statutory Basis for, the Proposed Rule Change

1. Purpose

The Exchange proposes to amend NYSE Rule 123B.30 (Exchange Automated Order Routing System) to align its rule governing sponsored access to the Exchange with the current industry standard.

Background and Current NYSE Rule 123B.30

The Exchange recently adopted NYSE Rule 123B.30, which sets forth the requirements for a member or member organization (''Sponsoring Member Organization'') to provide a non-member firm or customer (''Sponsored Participant'') with sponsored access to Exchange systems and facilities.[5] The Exchange modeled NYSE Rule 123B.30 on the industry standard sponsored access rules of its affiliate exchange, NYSE Arca, Inc. (''NYSE Arca''), and those of other exchanges, including NASDAQ Stock Market LLC, subject to one key distinction.[6]

Unlike other sponsored access rules, NYSE Rule 123B.30 requires agreements between (i) a Sponsoring Member Organization and a Sponsored Participant, and (ii) the Sponsoring Member Organization and the Exchange.[7] A Sponsored Participant must enter into a sponsored access agreement containing specific provisions governing use and access of Exchange systems and facilities that establishes a proper customer relationship and account(s) with a Sponsoring Member Organization through which the Sponsored Participant may trade on the Exchange. The Sponsoring Member Organization must enter into an agreement with the Exchange designating its Sponsored Participant(s) and acknowledging its responsibilities thereto.[8]

Pursuant to the above agreements, the Sponsored Participant and the Sponsoring Member Organization agree to comply with the rules and procedures of the Exchange. In addition, the Sponsoring Member Organization must file a notice of consent and must agree to be responsible for the conduct of the Sponsored Participant and/or any person acting on its behalf, and any and all orders entered by, or executions of, the Sponsored Participant or its employees or agents (including unauthorized transactions) are binding on the Sponsoring Member Organization. The Sponsoring Member must also have adequate procedures and controls to provide oversight of Authorized Traders who enter orders on behalf of Sponsored Participants and to prevent the improper use of or access to Exchange systems or facilities.[9]

Sponsored Participants are required to establish adequate procedures and controls to monitor the use and access of Exchange systems and facilities by their employees, agents, and customers. The Sponsored Participant must also agree to compensate the Sponsoring Member Organization, the Exchange, or any other third party, for any amounts due arising out of the Sponsored Participant's access to and the use of Exchange systems and facilities.[10]

Proposed Amendments

In order to better align its sponsored access rule with the current industry standard the Exchange proposes to amend NYSE Rule 123B.30. First, the Exchange proposes to amend Rule 123B.30(c)(2)(A) to provide for agreements (i) between a Sponsoring Member Organization and a Sponsored Participant, and (ii) among the Sponsoring Member Organization, the Sponsored Participant and the Exchange.

In addition, the Exchange proposes to amend the language contained in subparagraph (d)(4) to refer to access ''to the Exchange'', as opposed to Exchange facilities or NYSE systems. Throughout NYSE Rule 123B.30, with the exception of (d)(4), the provisions governing sponsored participation reference access ''to the Exchange''. NYSE believes that these inconsistent references within Rule 123B.30(d)(4) could cause confusion unless it is amended to track the other provisions of the Rule.

Insofar as the amendments proposed herein have been previously determined by the Commission to be consistent with the protection of investors and the public interest, the Exchange believes that the proposed amendments to NYSE Rule 123B.30 are necessary to further align it with the industry standard for sponsored access.

2. Statutory Basis

The Exchange believes the proposed rule change is consistent with and furthers the objectives of Section 6(b)(5) of the Act,[11] in that it is designed to prevent fraudulent and manipulative practices, to promote just and equitable principles of trade, to remove impediments to, and perfect the mechanisms of, a free and open market and a national market system, and, in general, to protect investors and the public interest. The proposed rule change also supports the principles of Section 11A(a)(1)[12] of the Act in that it seeks to ensure economically efficient execution of securities transactions and fair competition among brokers and dealers and among exchange markets. The Exchange believes the proposed amendments to NYSE Rule 123B.30 will provide a procedure for sponsored access to the Exchange consistent with the current industry standard and the Act.

B. Self-Regulatory Organization's Statement on Burden on Competition

The Exchange does not believe that the proposed rule change will impose any burden on competition that is not necessary or appropriate in furtherance of the purposes of the Act.

C. Self-Regulatory Organization's Statement on Comments on the Proposed Rule Change Received From Members, Participants, or Others

No written comments were solicited or received with respect to the proposed rule change.

III. Date of Effectiveness of the Proposed Rule Change and Timing for Commission Action

Because the foregoing rule change does not: (1) Significantly affect the protection of investors or the public interest; (2) impose any significant burden on competition; and (3) become operative for 30 days after the date of this filing, or such shorter time as the Commission may designate, it has become effective pursuant to Section

[5] *See* Securities Exchange Release No. 58429 (August 27, 2008), 73 FR 51676 (September 4, 2008) (SR–NYSE–2008–71).

[6] *See* Securities Exchange Act Release No. 53615 (April 7, 2006), 71 FR 19226 (April 13, 2006) (SR–PCX–2006–24) (adopting NYSE Arca Equities Rules 7.29 and 7.30). *See also* Securities Exchange Act Release No. 55550 (March 28, 2007), 72 FR 16389 (April 4, 2007) (SR–NASDAQ–2007–010) (amending NASDAQ Rule 4611(d) to conform its requirements to NYSE Arca Rules 7.29 and 7.30).

[7] Other sponsored access rules require both the Sponsoring Member Organization and the Sponsored Participant to enter into agreements with the Exchange governing the use of and access to Exchange systems and facilities. *See, e.g.*, NYSE Rules 86(o)(2)(A) and 1500(g)(3)(B)(ii), concerning sponsored access to NYSE Bonds and NYSE MatchPoint, respectively.

[8] *See* NYSE Rule 123B.30, paragraphs (c)(1)–(3).

[9] *See* NYSE Rule 123B.30(c)(2), (d).

[10] *See* NYSE Rule 123B.30(c)(2).

[11] 15 U.S.C. 78f(b)(5).

[12] 15 U.S.C. 78k–1(a)(1).

19(b)(3)(A) of the Act[13] and Rule 19b–4(f)(6) thereunder.[14]

A proposed rule change filed under 19b–4(f)(6) normally may not become operative prior to 30 days after the date of filing.[15] However, Rule 19b–4(f)(6)(iii)[16] permits the Commission to designate a shorter time if such action is consistent with the protection of investors and the public interest. The Exchange has requested that the Commission waive the 30-day operative delay so that the proposal may become operative upon filing. The Commission believes that waiving the 30-day operative delay is consistent with the protection of investors and the public interest. The Commission hereby grants the Exchange's request and designates the proposal operative upon filing.[17]

At any time within 60 days of the filing of such proposed rule change the Commission may summarily abrogate such rule change if it appears to the Commission that such action is necessary or appropriate in the public interest, for the protection of investors or otherwise in furtherance of the purposes of the Act.

IV. Solicitation of Comments

Interested persons are invited to submit written data, views and arguments concerning the foregoing, including whether the proposed rule change is consistent with the Act. Comments may be submitted by any of the following methods:

Electronic Comments

- Use the Commission's Internet comment form (*http://www.sec.gov/rules/sro.shtml*); or
- Send an e-mail to *rule-comments@sec.gov.* Please include File Number SR–NYSE–2008–100 on the subject line.

Paper Comments

- Send paper comments in triplicate to Secretary, Securities and Exchange Commission, 100 F Street, NE., Washington, DC 20549–1090.

All submissions should refer to File Number SR–NYSE–2008–100. This file number should be included on the subject line if e-mail is used. To help the Commission process and review your comments more efficiently, please use only one method. The Commission will post all comments on the Commission's Internet Web site (*http://www.sec.gov/rules/sro.shtml*). Copies of the submission, all subsequent amendments, all written statements with respect to the proposed rule change that are filed with the Commission, and all written communications relating to the proposed rule change between the Commission and any person, other than those that may be withheld from the public in accordance with the provisions of 5 U.S.C. 552, will be available for inspection and copying in the Commission's Public Reference Room, on official business days between the hours of 10 a.m. and 3 p.m. Copies of the filing also will be available for inspection and copying at the principal office of the Exchange. All comments received will be posted without change; the Commission does not edit personal identifying information from submissions. You should submit only information that you wish to make available publicly. All submissions should refer to File Number SR–NYSE–2008–100 and should be submitted on or before November 10, 2008.

For the Commission, by the Division of Trading and Markets, pursuant to delegated authority.[18]

Florence E. Harmon,

Acting Secretary.

[FR Doc. E8–24753 Filed 10–17–08; 8:45 am]

BILLING CODE 8011–01–P

[13] 15 U.S.C. 78s(b)(3)(A).

[14] 17 CFR 240.19b–4(f)(6).

[15] 17 CFR 240.19b–4(f)(6)(iii). In addition, Rule 19b–4(f)(6)(iii) requires that a self-regulatory organization submit to the Commission written notice of its intent to file the proposed rule change, along with a brief description and text of the proposed rule change, at least five business days prior to the date of filing of the proposed rule change, or such shorter time as designated by the Commission. The Exchange has requested the Commission to waive this five-day pre-filing notice requirement. The Commission hereby grants this request.

[16] *Id.*

[17] For the purposes only of waiving the 30-day operative delay, the Commission has considered the proposed rule's impact on efficiency, competition, and capital formation. *See* 15 U.S.C. 78c(f).

[18] 17 CFR 200.30–3(a)(12).

SECURITIES AND EXCHANGE COMMISSION

[Release No. 34–58748; File No. SR–NYSEArca–2008–102]

Self-Regulatory Organizations; NYSE Arca, Inc.; Notice of Filing and Immediate Effectiveness of Proposed Rule Change Amending NYSE Arca Rules Governing Doing Business With the Public

October 8, 2008.

Pursuant to Section 19(b)(1)[1] of the Securities Exchange Act of 1934 (''Act'')[2] and Rule 19b–4 thereunder,[3] notice is hereby given that, on September 25, 2008, NYSE Arca, Inc. (''NYSE Arca'' or ''Exchange'') filed with the Securities and Exchange Commission (''Commission'') the proposed rule change as described in Items I and II below, which Items have been substantially prepared by the Exchange. The Exchange has designated the proposed rule change as constituting a ''non-controversial'' rule change under paragraph (f)(6) of Rule 19b–4 under the Act,[4] which renders the proposal effective upon receipt of this filing by the Commission. The Commission is publishing this notice to solicit comments on the proposed rule change from interested persons.

I. Self-Regulatory Organization's Statement of the Terms of Substance of the Proposed Rule Change

The Exchange proposes to amend certain rules that govern an Exchange member's conduct in doing business with the public. The proposed rule change would require member organizations to integrate the responsibility for supervision of a member organization's public customer options business into its overall supervisory and compliance program. In addition, the Exchange proposes to amend certain rules to strengthen member organizations' supervisory procedures and internal controls as they relate to a member's public customer options business. The text of the proposed rule is available on the Exchange's Web site at *http://www.nyse.com*, at the Exchange's principal office, and at the Commission's Public Reference Room.

II. Self-Regulatory Organization's Statement of the Purpose of, and Statutory Basis for, the Proposed Rule Change

In its filing with the Commission, the Exchange included statements concerning the purpose of, and basis for, the proposed rule change and discussed any comments it received on the proposed rule change. The text of those statements may be examined at the places specified in Item IV below. The Exchange has prepared summaries, set forth in sections A, B, and C below, of the most significant parts of such statements.

A. Self-Regulatory Organization's Statement of the Purpose of, and the Statutory Basis for, the Proposed Rule Change

1. Purpose

The purpose of the proposed rule change is to create a supervisory structure for options that is similar to

[1] 15 U.S.C. 78s(b)(1).

[2] 15 U.S.C. 78a.

[3] 17 CFR 240.19b–4.

[4] 17 CFR 240.19b–4(f)(6).

that required by New York Stock Exchange (''NYSE'') and Financial Industry Regulatory Authority (''FINRA'') (f/k/a the National Association of Securities Dealers (''NASD'')) rules.[5] The proposed rule change would eliminate the requirement that member organizations qualified to do a public customer business in options must designate a single person to act as Senior Registered Options Principal (''SROP'') for the member organization and that each such member organization designate a specific individual as a Compliance Registered Options Principal (''CROP''). Instead member organizations would be required to integrate the SROP and CROP functions into their overall supervisory and compliance programs.

The SROP concept was first introduced by the Chicago Board Options Exchange (''CBOE'') during the early years of the development of the listed options market. Previously, under CBOE rules, member organizations were required to designate one or more persons qualified as ROPs having supervisory responsibilities in respect to the member organization's options business. As the number of ROPs at larger member organizations began to increase, options exchanges imposed an additional requirement that member organizations designate one of their ROPs as the SROP. This was intended to eliminate confusion as to where the compliance and supervisory responsibilities lay by centralizing in a single supervisory officer overall responsibility for the supervision of a member organization's options activities.[6] Subsequently, following the recommendation of the Commission's Options Study, options exchanges required member organizations to designate a CROP to be responsible for the member organization's overall compliance program in respect to its options activities.[7] The CROP may be the same person who is designated as SROP.

Since the SROP and CROP requirements were first imposed, the supervisory function in respect to the options activities of most securities firms has been integrated into the matrix of supervisory and compliance functions in respect to the firms' other securities activities. This not only reflects the maturity of the options market, but also recognizes the ways in which the uses of options themselves have become more integrated with other securities in the implementation of particular strategies. Thus, the current requirement for a separately designated senior supervisor in respect to all aspects of a member organization's options activities, rather than clarifying the allocation of supervisory responsibilities within the member organization, may have just the opposite effect by failing to take into account the way in which these responsibilities are actually assigned. In addition, by permitting supervision of a member organization's options activities to be handled in the same manner as the supervision of its other securities activities as well as its futures activities, the proposed rule change is designed to ensure that supervisory responsibility over each segment of the member organization's business is assigned to the best qualified persons in the member organization, thereby enhancing the overall quality of supervision. The same holds true for the compliance function.

For example, most member organizations have designated one person to have supervisory responsibility over the application of margin requirements and other matters pertaining to the extension of credit. The proposed rule change would enable a member organization to include within the scope of such a person's duties the supervision over the proper margining of options accounts, thereby assuring that the most qualified person is charged with this responsibility and at the same time eliminating any uncertainty that might now exist as to whether this responsibility lies with the senior credit supervisor or with the SROP.

Similarly, the proposed rule change would allow a member organization to specifically designate one or more individuals as being responsible for approving a ROP's acceptance of discretionary accounts[8] and exceptions to a member organization's suitability standards for trading uncovered short options.[9] The proposed rule change would allow member organizations the flexibility to assign such responsibilities, which formerly rested with the SROP and/or CROP, to more than one ROP-qualified individual where the member organization believes it advantageous to do so to enhance its supervisory or compliance structure. Typically, a member organization may wish to divide these functions on the basis of geographic region or functional considerations. The proposed amendment to Rule 9.26 would clarify the qualification requirements for individuals designated as ROPs.[10]

The proposed rule change would require options discretionary accounts, the acceptance of which must be approved by a ROP-qualified individual (other than the ROP who accepted the account), to be supervised in the same manner as the supervision of other securities accounts that are handled on a discretionary basis. The proposed rule change would also eliminate the requirement that discretionary options orders be approved on the day of entry by a ROP (with one exception, as described below). This requirement predates the Options Study and is not consistent with the use of supervisory tools in computerized format or exception reports generated after the close of a trading day. No similar requirement exists for supervision of other securities accounts that are handled on a discretionary basis.[11] Discretionary orders must be reviewed in accordance with a member organization's written supervisory procedures. The proposed rule change would ensure that supervisory responsibilities are assigned to specific ROP-qualified individuals, thereby enhancing the quality of supervision.

The proposed rule change would revise Exchange Rule 9.18(e) by adding, as Commentary .02, a requirement that any member organization that does not utilize computerized surveillance tools for the frequent and appropriate review of discretionary account activity must establish and implement procedures to require ROP-qualified individuals who have been designated to review discretionary accounts to approve and initial each discretionary order on the day entered. The Exchange believes that any member organization that does not utilize computerized surveillance tools to monitor discretionary account activity should continue to be required to perform the daily manual review of discretionary orders.

Under the proposed rule change, options discretionary accounts would continue to receive frequent appropriate supervisory review by designated ROP-qualified individuals. Additionally, member organizations would continue to be required to designate ROP-qualified individuals to review and approve the acceptance of options discretionary accounts in order to determine whether the ROP accepting the account had a reasonable basis for believing that the customer was able to

[5] *See* NYSE Rule 342 and NASD Rule 3010.

[6] *See* Securities and Exchange Commission, 96th Cong., 1st Sess., Report of the Special Study of the Options Markets (Comm. Print 1978) 316 fn. 11 (''Options Study'').

[7] *Id.* at p. 335.

[8] *See* proposed Rule 9.18(e).

[9] *See* proposed Rule 9.18(b)(6)(C).

[10] *See* commentaries .02 and .04 to proposed Rule 9.26.

[11] *See e.g.*, NYSE Rule 408.

understand and bear the risks of the proposed strategies or transactions. This requirement would provide an additional level of supervisory audit over options discretionary accounts that do not exist for other securities discretionary accounts.

In addition, the proposed rule change would require that each member organization submit to the Exchange a written report by April 1 of each year that details the member organization's supervision and compliance effort, including its options compliance program, during the preceding year and reports on the adequacy of the member organization's ongoing compliance processes and procedures.[12]

Proposed Rule 9.18(d)(2)(H) would require that each member organization submit, by April 1 of each year, a copy of the Rule 9.18(d)(2)(G) annual report to one or more of its control persons or, if the member organization has no control person, to the audit committee of its board of directors or its equivalent committee or group.[13]

Proposed Rule 9.18(d)(2)(G) would provide that a member organization that specifically includes its options compliance program in a report that complies with substantially similar requirements of NYSE and NASD rules will be deemed to have satisfied the requirements of Rules 9.18(d)(2)(G) and 9.18(d)(2)(H).

Although the proposed rule change would eliminate entirely the positions and titles of the SROP and CROP, member organizations would still be required to designate a single general partner or executive officer to assume overall authority and responsibility for internal supervision, control of the member organization and compliance with securities laws and regulations.[14] Member organizations would also be required to designate specific qualified individuals as having supervisory or compliance responsibilities over each aspect of the member organization's options activities and to set forth the names and titles of these individuals in their written supervisory procedures.[15] This is consistent with the integration of options supervision into the overall supervisory and compliance structure of a member organization. In connection with the approval of the proposed rule change, the Exchange intends to review member organizations' written supervisory and compliance procedures in the course of the Exchange's routine examination of member organizations to ensure that supervisory and compliance responsibilities are adequately defined.

The Exchange believes that the proposed rule change recognizes that options are no longer in their infancy, have become more integrated with other securities in the implementation of particular strategies, and thus should not continue to be regulated as though they are a new and experimental product. The Exchange believes that the proposed rule change is appropriate and does not materially alter the supervisory operations of member organizations. The Exchange believes the supervisory and compliance structure in place for non-options products at most member organizations is not materially different from the structure in place for options.

Supervisory Procedures and Internal Controls

The Exchange also proposes to amend certain rules to strengthen member and member organizations' supervisory procedures and internal controls as they relate to a member's public customer options business. The proposed rule changes described below are modeled after NYSE, NASD and CBOE rules approved by the Commission in 2004 [16] and in 2007,[17] respectively. The Exchange believes the following proposal to strengthen member supervisory procedures and internal controls is appropriate and consistent with the preceding proposal to integrate options and non-options sales practice supervision and compliance functions.

The proposed revisions to Exchange Rule 9.18(d)(1)(C) would require the development and implementation of written policies and procedures reasonably designed to supervise sales managers and other supervisory personnel who service customer options accounts (i.e., who act in the capacity of a registered representative).[18] This requirement would apply to branch office managers, sales managers, regional/district sales managers, or any person performing a similar supervisory function. Such policies and procedures are expected to encompass all options sales-related activities. Proposed Rule 9.18(d)(1)(C)(i) would require that supervisory reviews of producing sales managers be conducted by a qualified ROP who is either senior to, or otherwise ''independent of,'' the producing manager under review.[19] This provision is intended to ensure that all options sales activity of a producing manager is monitored for compliance with applicable regulatory requirements by persons who do not have a personal interest in such activity.

Proposed Rule 9.18(d)(1)(C)(ii) would provide a limited exception for members so limited in size and resources that there is no qualified person senior to, or otherwise independent of, the producing manager to conduct the review. In this case, the reviews may be conducted by a qualified ROP to the extent practicable. Under proposed Rule 9.18(d)(1)(C)(iii), a member relying on the limited size and resources exception would be required to document the factors used to determine that compliance with each of the ''senior'' or ''otherwise independent'' standards of Rule 9.18(d)(1)(C)(i) is not possible, and that the required supervisory systems and procedures in place with respect to any producing manager comply with the provisions of Rule 9.18(d)(1)(C)(i) to the extent practicable.

Proposed paragraph (d)(1)(C)(iv) of Rule 9.18 would provide that a member organization that complies with requirements of NYSE or NASD rules that are substantially similar to the requirements in Rules 9.18(d)(1)(C)(i), (d)(1)(C)(ii) and (d)(1)(C)(iii) will be deemed to have met such requirements.

Under proposed Rule 9.18(d)(2)(A), a member, upon a customer's written instructions, may hold mail for a customer who will not be at his or her usual address for no longer than two months if the customer is on vacation or traveling, or three months if the customer is going abroad. This

[12] *See* proposed Rule 9.18(d)(2)(G) which is modeled after NYSE Rule 342.30.

[13] Proposed Rule 9.18(d)(2)(H) is modeled after NYSE Rule 354.

[14] *See* proposed Rule 9.18(d)(1).

[15] *See* commentary .01 to proposed Rule 9.18(d).

[16] *See* Securities Exchange Act Release No. 49882 (June 17, 2004), 69 FR 35108 (June 23, 2004) (SR–NYSE–2002–36), and Securities Exchange Act Release No. 49883 (June 17, 2004), 69 FR 35092 (June 23, 2004) (SR–NASD–2002–162).

[17] *See* Securities Exchange Act Release No. 56492 (September 21, 2007), 72 FR 54952 (September 27, 2007) (SR–CBOE–2007–106).

[18] Proposed Rule 9.18(d)(1)(C) is modeled after NYSE Rule 342.19.

[19] An ''otherwise independent'' person is defined in proposed Rule 9.18(d)(1)(C)(i) as one who: Is either senior to, or otherwise independent of, the producing manager under review. For purposes of this Rule, an ''otherwise independent'' person: May not report either directly or indirectly to the producing manager under review; must be situated in an office other than the office of the producing manager; must not otherwise have supervisory responsibility over the activity being reviewed; and must alternate such review responsibility with another qualified person every two years or less. Further, if a person designated to review a producing manager receives an override or other income derived from that producing manager's customer activity that represents more than 10% of the designated person's gross income derived from the member organization over the course of a rolling twelve-month period, the member organization must establish alternative senior or otherwise independent supervision of that producing manager to be conducted by a qualified Registered Options Principal other than the designated person receiving the income.

provision would help ensure that members that hold mail for customers who are away from their usual addresses, do so only pursuant to the customer's written instructions and for a specified, relatively short period of time.[20]

Proposed Rule 9.18(d)(2)(B) would require that, before a customer options order is executed, the account name or designation must be placed upon the memorandum for each transaction. In addition, only a qualified ROP would be permitted to approve any changes in account names or designations. The ROP also would be required to document the essential facts relied upon in approving the changes and maintain the record in a central location. A member would be required to preserve any account designation change documentation for a period of not less than three years, with the documentation preserved for the first two years in an easily accessible place, as the term ''easily accessible place'' is used in Rule 17a–4 of the Act.[21] The Exchange believes the proposed rule would help to protect account name and designation information from possible fraudulent activity.[22]

Proposed Rule 9.18(d)(2)(C) would require member organizations to develop and maintain adequate controls over each of their business activities. The proposed rule further would require that such controls include the establishment of procedures to independently verify and test the supervisory systems and procedures for those business activities. Member organizations would be required to include in the annual report prepared pursuant to Rule 9.18(d)(2)(G) a review of the member organization's efforts in this regard, including a summary of the tests conducted and significant exceptions identified. The Exchange believes proposed Rule 9.18(d)(2)(C)(i) would enhance the quality of member organizations' supervision.[23]

Proposed Rule 9.18(d)(2)(C)(ii) would provide that a member organization that complies with requirements of NYSE or NASD rules that are substantially similar to the requirements in Rule 9.18(d)(2)(C)(i) will be deemed to have met such requirements.

Proposed Rule 9.18(d)(2)(D)(1) would establish requirements for branch office inspections similar to the requirements of NYSE Rule 342.24. Specifically, proposed Rule 9.18(d)(2)(D)(2) would require a member organization to inspect each supervisory branch office at least annually and each non-supervisory branch office at least once every three years.[24] The proposed rule further would require that persons who conduct a member organization's annual branch office inspection must be independent of the direct supervision or control of the branch office (i.e., not the branch office manager, or any person who directly or indirectly reports to such manager, or any person to whom such manager directly reports). The Exchange believes that requiring branch office inspections be conducted by someone who has no significant financial interest in the success of a branch office should lead to more objective and vigorous inspections.

Under proposed Rule 9.18(d)(2)(E), any member organization seeking an exemption, pursuant to Rule 9.18(d)(2)(D)(ii), from the annual branch office inspection requirement would be required to submit to the Exchange written policies and procedures for systematic risk-based surveillance of its branch offices, as defined in Rule 9.18(d)(2)(E). Proposed Rule 9.18(d)(2)(F) would require that annual branch office inspection programs include, at a minimum, testing and verification of specified internal controls.[25] Proposed Rule 9.18(d)(2)(D)(3) would provide that a member organization that complies with requirements of NYSE or NASD rules that are substantially similar to the requirements in Rules 9.18(d)(2)(D), (E) and (F) will be deemed to have met such requirements.

In conjunction with the proposed changes to Rules 9.18(d)(2)(D), (E) and (F), the Exchange proposes to amend Rule 9.18(m) Commentary .01 to define ''branch office'' in a way that is substantially similar to the definition of branch office in NYSE Rule 342.10.

Proposed Rule 9.18(d)(2)(G)(4) would require a member organization to designate a Chief Compliance Officer (''CCO''). Proposed Rule 9.18(d)(2)(G)(5) would require each member organization's Chief Executive Officer (''CEO''), or equivalent, to certify annually that the member organization has in place processes to: (1) Establish and maintain policies and procedures reasonably designed to achieve compliance with applicable Exchange rules and federal securities laws and regulations; (2) modify such policies and procedures as business, regulatory, and legislative changes and events dictate; and (3) test the effectiveness of such policies and procedures on a periodic basis, the timing of which is reasonably designed to ensure continuing compliance with Exchange rules and federal securities laws and regulations.

Proposed Rule 9.18(d)(2)(G)(5) further would require the CEO to attest that the CEO has conducted one or more meetings with the CCO in the preceding 12 months to discuss the compliance processes in proposed Rule 9.18(d)(2)(G)(5)(ii), that the CEO has consulted with the CCO and other officers to the extent necessary to attest to the statements in the certification, and the compliance processes are evidenced in a report, reviewed by the CEO, CCO, and such other officers as the member organization deems necessary to make the certification, that is provided to the member organization's board of directors and audit committee (if such committee exists).[26]

Rule 9.18(e) allows member organizations to exercise time and price discretion on orders for the purchase or sale of a definite number of options contracts in a specified security. The Exchange proposes to amend Rule 9.18(e) to limit the duration of this discretionary authority to the day it is granted, absent written authorization to the contrary. In addition, the proposed rule would require any exercise of time and price discretion to be reflected on the customer order ticket. The proposed one-day limitation would not apply to time and price discretion exercised for orders affected with or for an institutional account pursuant to valid Good-Till-Cancelled instructions issued on a ''not held'' basis. The Exchange believes that investors will receive greater protection by clarifying the time such discretionary orders remain pending.[27]

[20] Proposed Rule 9.18(d)(2)(A) is modeled after NASD Rule 3110(i).

[21] 17 CFR 240.17a–4.

[22] Propose Rule 9.18(d)(2)(B) is modeled after NASD Rule 3110(j).

[23] Proposed Rule 9.18(d)(2)(C)(i) is modeled after NYSE Rule 342.23. Paragraph (C)(ii) would provide that a member organization that complies with requirements of NYSE or the NASD that are substantially similar to the requirements in Rule 9.18(d)(2)(C)(i) will be deemed to have met such requirements.

[24] Proposed Rules 9.18(d)(2)(D)(1)(i) and (ii) would provide members with two exceptions from the annual branch office inspection requirement; a member may demonstrate to the satisfaction of the Exchange that other arrangements may satisfy the Rule's requirements for a particular branch office, or based upon a member organization's written policies and procedures providing for a systematic risk-based surveillance system, the member organization submits a proposal to the Exchange and receives, in writing, an exemption from this requirement pursuant to Rule 9.18(d)(2)(E).

[25] Proposed Rules 9.18(d)(2)(E) and (d)(2)(F) are modeled after NYSE Rules 342.25 and 342.26.

[26] Proposed Rule 9.18(d)(2)(G)(5) is modeled after NASD Rule 3013 and NYSE Rule 342.30(e).

[27] Proposed Rule 9.18(e)(i) is modeled after NASD Rule 2510(d)(l).

The proposed rule changes listed above are substantially similar to changes already implemented by the NYSE, NASD (n/k/a FINRA) and CBOE.[28]

2. Statutory Basis

The proposed rule change would integrate the supervision and compliance functions relating to member organizations' public customer option activities into the overall supervisory structure of a member organization, thereby eliminating any uncertainty over where supervisory responsibilities lies. The proposed rule change would also foster the strengthening of member organizations' internal controls and supervisory systems. As such, the proposed rule changes are consistent with, and further the objectives of, Section 6(b)(5)[29] of the Act, in that they are designed to promote just and equitable principles of trade, to prevent fraudulent and manipulative acts and practices, to remove impediments to and perfect the mechanisms of a free and open market and a national market system, and in general, to protect investors and public interest.

B. Self-Regulatory Organization's Statement on Burden on Competition

The Exchange does not believe that the proposed rule change will impose any burden on competition that is not necessary or appropriate in furtherance of the purposes of the Act. This rule change is consistent with the regulatory framework maintained by the NYSE, FINRA and CBOE and as such does not impose any burden on competition or significantly affect the protection of investors.

C. Self-Regulatory Organization's Statement on Comments on the Proposed Rule Change Received From Members, Participants, or Others

No written comments were solicited or received with respect to the proposed rule change.

III. Date of Effectiveness of the Proposed Rule Change and Timing for Commission Action

Pursuant to Section 19(b)(3)(A) of the Act[30] and Rule 19b–4(f)(6)[31] thereunder, NYSE Arca has designated this proposed rule change as one that does not:

(i) Significantly affect the protection of investors or the public interest;

(ii) impose any significant burden on competition; and

(iii) become operative for 30 days from the date on which it was filed, or such shorter time as the Commission may designate, if consistent with the protection of investors and the public interest.

The Exchange notes that the proposed amendment does not propose any new policies or provisions that are unique or unproven and is substantially similar to NYSE, FINRA, and CBOE rules. For the foregoing reasons, the Exchange believes that this rule filing qualifies for expedited effectiveness as a ''non-controversial'' rule change under paragraph (f)(6) of Rule 19b–4 of the Act.

The Exchange provided the Commission with written notice of its intent to file this proposed rule change at least five business days prior to the date of the filing.[32] The Exchange requests that the Commission waive the 30-day operative delay contained in Rule 19b–4(f)(6) of the Act so that certain Exchange Rules that govern an Exchange member's conduct in doing business with the public can come immediately inline with those of the NYSE, FINRA, and CBOE, thereby providing simplicity and clarity for cross-member firms. The Commission believes that waiving the 30-day operative delay is consistent with the protection of investors and the public interest. The Commission therefore grants the Exchange's request and designates the proposal to be operative upon filing.[33]

At any time within 60 days of the filing of the proposed rule change, the Commission may summarily abrogate such rule change if it appears to the Commission that such action is necessary or appropriate in the public interest, for the protection of investors, or otherwise in furtherance of the purposes of the Act.

IV. Solicitation of Comments

Interested persons are invited to submit written data, views, and arguments concerning the foregoing, including whether the proposed rule change is consistent with the Act. Comments may be submitted by any of the following methods:

Electronic Comments

- Use the Commission's Internet comment form (*http://www.sec.gov/rules/sro.shtml*); or
- Send an e-mail to *rule-comments@sec.gov*. Please include File Number SR–NYSEArca–2008–102 on the subject line.

Paper Comments

- Send paper comments in triplicate to Secretary, Securities and Exchange Commission, 100 F Street, NE., Washington, DC 20549–1090.

All submissions should refer to File Number SR–NYSEArca–2008–102. This file number should be included on the subject line if e-mail is used. To help the Commission process and review your comments more efficiently, please use only one method. The Commission will post all comments on the Commission's Internet Web site (*http://www.sec.gov/rules/sro.shtml*). Copies of the submission, all subsequent amendments, all written statements with respect to the proposed rule change that are filed with the Commission, and all written communications relating to the proposed rule change between the Commission and any person, other than those that may be withheld from the public in accordance with the provisions of 5 U.S.C. 552, will be available for inspection and copying in the Commission's Public Reference Section, 100 F Street, NE., Washington, DC 20549, on official business days between the hours of 10 a.m. and 3 p.m. Copies of the filing will also be available for inspection and copying at NYSE Arca's principal office and on its Internet Web site at *http://www.nyse.com*. All comments received will be posted without change; the Commission does not edit personal identifying information from submissions. You should submit only information that you wish to make available publicly. All submissions should refer to File Number SR–NYSEArca–2008–102 and should be submitted on or before November 10, 2008.

For the Commission, by the Division of Trading and Markets, pursuant to delegated authority.[34]

Florence E. Harmon,

Acting Secretary.

[FR Doc. E8–24754 Filed 10–17–08; 8:45 am]

BILLING CODE 8011–01–P

[28] *See supra* notes 16 and 17.

[29] 15 U.S.C. 78f(b)(5).

[30] 15 U.S.C. 78s(b)(3)(A).

[31] 17 CFR 240.19b–4(f)(6).

[32] *Id.* Rule 19b–4(f)(6)(iii) requires a self-regulatory organization to give the Commission written notice of its intent to file a proposed rule change at least five business days prior to the date of the filing of the proposed rule, or such shorter time as designated by the Commission. The Exchange has satisfied this requirement.

[33] For purposes only of waiving the 30-day operative delay, the Commission has considered the proposed rule's impact on efficiency, competition and capital formation. *See* 15 U.S.C. 78c(f).

[34] 17 CFR 200.30–3(a)(12).

SMALL BUSINESS ADMINISTRATION

[Disaster Declaration #11472 and #11473]

Oklahoma Disaster #OK–00024

AGENCY: U.S. Small Business Administration.

ACTION: Notice.

SUMMARY: This is a notice of an Administrative declaration of a disaster for the State of Oklahoma dated 10/09/2008.

Incident: Severe Storms, Tornadoes, and Flooding.

Incident Period: 09/11/2008 through 09/18/2008.

Effective Date: 10/09/2008.

Physical Loan Application Deadline Date: 12/08/2008.

Economic Injury (EIDL) Loan Application Deadline Date: 07/08/2009.

ADDRESSES: Submit completed loan applications to: U.S. Small Business Administration, Processing and Disbursement Center, 14925 Kingsport Road, Fort Worth, TX 76155.

FOR FURTHER INFORMATION CONTACT: A. Escobar, Office of Disaster Assistance, U.S. Small Business Administration, 409 3rd Street, SW., Suite 6050, Washington, DC 20416.

SUPPLEMENTARY INFORMATION: Notice is hereby given that as a result of the Administrator's disaster declaration, applications for disaster loans may be filed at the address listed above or other locally announced locations.

The following areas have been determined to be adversely affected by the disaster:

Primary Counties: Kay.

Contiguous Counties:

Oklahoma: Garfield, Grant, Noble, Osage.

Kansas: Cowley, Sumner.

The Interest Rates are:

	Percent
Homeowners With Credit Available Elsewhere	5.750
Homeowners Without Credit Available Elsewhere	2.875
Businesses With Credit Available Elsewhere	8.000
Businesses & Small Agricultural Cooperatives Without Credit Available Elsewhere	4.000
Other (Including Non-Profit Organizations) With Credit Available Elsewhere	5.250
Businesses and Non-Profit Organizations Without Credit Available Elsewhere	4.000

The number assigned to this disaster for physical damage is 11472 6 and for economic injury is 11473 0. The States which received an EIDL Declaration # are Oklahoma, Kansas.

(Catalog of Federal Domestic Assistance Numbers 59002 and 59008)

Dated: October 9, 2008.

Sandy K. Baruah,

Acting Administrator.

[FR Doc. E8–24876 Filed 10–17–08; 8:45 am]

BILLING CODE 8025–01–P

SMALL BUSINESS ADMINISTRATION

[Disaster Declaration # 11464 and # 11465]

Puerto Rico Disaster Number PR–00003

AGENCY: U.S. Small Business Administration.

ACTION: Amendment 2.

SUMMARY: This is an amendment of the Presidential declaration of a major disaster for the Commonwealth of Puerto Rico (FEMA–1798–DR), dated 10/01/2008.

Incident: Severe Storms and Flooding.

Incident Period: 09/21/2008 through 10/03/2008.

Effective Date: 10/08/2008.

Physical Loan Application Deadline Date: 12/01/2008.

EIDL Loan Application Deadline Date: 07/01/2009.

ADDRESSES: Submit completed loan applications to: U.S. Small Business Administration, Processing and Disbursement Center, 14925 Kingsport Road, Fort Worth, TX 76155.

FOR FURTHER INFORMATION CONTACT: A. Escobar, Office of Disaster Assistance, U.S. Small Business Administration, 409 3rd Street, SW., Suite 6050, Washington, DC 20416.

SUPPLEMENTARY INFORMATION: The notice of the Presidential disaster declaration for the Commonwealth of Puerto Rico, dated 10/01/2008 is hereby amended to include the following areas as adversely affected by the disaster:

Primary Counties: (*Physical Damage and Economic Injury Loans*): Arroyo, Cabo Rojo, Guanica, Guayanilla, Gurabo, Juncos, Lajas, Penuelas, San Lorenzo, Villalba, Yauco.

Contiguous Counties: (*Economic Injury Loans Only*): Puerto Rico: Caguas, Canovanas, Carolina, Hormigueros, Lares, Maricao, Mayaguez, Orocovis, Sabana Grande, San German, Trujillo Alto.

All other information in the original declaration remains unchanged.

(Catalog of Federal Domestic Assistance Numbers 59002 and 59008)

Herbert L. Mitchell,

Associate Administrator for Disaster Assistance.

[FR Doc. E8–24869 Filed 10–17–08; 8:45 am]

BILLING CODE 8025–01–P

DEPARTMENT OF STATE

[Public Notice 6412]

60-Day Notice of Proposed Renewal Information Collection: Form DS–0071, Affidavit of Identifying Witness, 1405–0088

ACTION: Notice of request for public comments.

SUMMARY: The Department of State is seeking Office of Management and Budget (OMB) approval for the renewal of information collection described below. The purpose of this notice is to allow 60 days for public comment in the **Federal Register** preceding submission to OMB. We are conducting this process in accordance with the Paperwork Reduction Act of 1995.

- *Title of Information Collection:* Affidavit of Identifying Witness.
- *OMB Control Number:* 1405–0088.
- *Type of Request:* Revision of a Currently Approved Collection.
- *Originating Office:* Department of State, Bureau of Consular Affairs, Passport Services, Office of Field Operations, Field Coordination Division. CA/PPT/FO/FC.
- *Form Number:* DS–0071.
- *Respondents:* Individuals or Households.
- *Estimated Number of Respondents:* 336,000.
- *Estimated Number of Responses:* 336,000.
- *Average Hours Per Response:* 5 minutes.
- *Total Estimated Burden:* 28,000 hours.
- *Frequency:* On occasion.
- *Obligation to Respond:* Required To Obtain or Retain a Benefit.

DATES: The Department will accept comments from the public up to 60 days from December 19, 2008.

ADDRESSES: You may submit comments by any of the following methods:

- *E-mail: agnewam@state.gov.*
- *Mail (paper, disk, or CD–ROM submissions):* Andrina Agnew, U.S. Department of State, CA/PPT/FO/FC, 2100 Pennsylvania Avenue, NW., 3rd Floor/Room 3040/SA–29, Washington, DC 20037.

You must include the DS form number (if applicable), information

collection title, and OMB control number in any correspondence.

FOR FURTHER INFORMATION CONTACT: Direct requests for additional information regarding the collection listed in this notice, including requests for copies of the proposed information collection and supporting documents, to Andrina Agnew, U.S. Department of State, CA/PPT/FO/FC, 2100 Pennsylvania Avenue, NW., 3rd Floor/Room 3040/SA–29, Washington, DC 20037, who may be reached at (202) 663–2445 or at *agnewam@state.gov.*

SUPPLEMENTARY INFORMATION: We are soliciting public comments to permit the Department to:

- Evaluate whether the proposed information collection is necessary for the proper performance of our functions.
- Evaluate the accuracy of our estimate of the burden of the proposed collection, including the validity of the methodology and assumptions used.
- Enhance the quality, utility, and clarity of the information to be collected.
- Minimize the reporting burden on those who are to respond, including the use of automated collection techniques or other forms of technology.

Abstract of Proposed Collection

The Affidavit of Identifying Witness, Form DS–0071, is used by the Department of State in making a determination of the applicant's eligibility to be documented as a citizen or a non-citizen national of the United States. The form is used by Acceptance Agents and Consular Officers to collect information for the purpose of establishing the identity of a passport applicant who has not submitted adequate evidence with his/her passport application. The primary purpose for soliciting the information is to establish identity and entitlement to issuance of a United States passport, and to properly administer and enforce the laws pertaining to issuance thereof. Lack of identity information may result in the application for a United States passport being denied. Inaccurate identity evidence could possibly result in issuance of a passport to a non-U.S. citizen or to someone using an assumed identity.

Methodology

The Affidavit of Identifying Witness, Form DS–0071, is used in conjunction with the Application for a U.S. Passport, Form DS–0011. This affidavit is required to be included with a passport application only when the applicant for a passport is unable to establish his or her identity to the satisfaction of a person authorized to accept passport applications. The identifying witness must complete and sign this form in the presence of the person authorized to accept passport applications.

Dated: October 10, 2008.

Brenda S. Sprague,

Deputy Assistant Secretary for Passport Services, Bureau of Consular Affairs, Department of State.

[FR Doc. E8–24906 Filed 10–17–08; 8:45 am]

BILLING CODE 4710–06–P

DEPARTMENT OF STATE

[Public Notice: 6410]

60-Day Notice of Proposed Renewal of Information Collection: Form DS–0064, Statement Regarding a Lost or Stolen Passport, 1405–0014

ACTION: Notice of request for public comments.

SUMMARY: The Department of State is seeking Office of Management and Budget (OMB) approval for the information collection renewal described below. The purpose of this notice is to allow 60 days for public comment in the **Federal Register** preceding submission to OMB. We are conducting this process in accordance with the Paperwork Reduction Act of 1995.

- *Title of Information Collection:* Statement Regarding a Lost or Stolen Passport.
- *OMB Control Number:* 1405–0014.
- *Type of Request:* Revision of a Currently Approved Collection.
- *Originating Office:* CA/PPT/FO/FC.
- *Form Number:* DS–0064.
- *Respondents:* Individuals or Households.
- *Estimated Number of Respondents:* 300,000.
- *Estimated Number of Responses:* 300,000.
- *Average Hours per Response:* 5 minutes.
- *Total Estimated Burden:* 25,000 hours.
- *Frequency:* On occasion.
- *Obligation to Respond:* Required to Obtain a Benefit.

DATES: The Department will accept comments from the public up to 60 days from October 20, 2008.

ADDRESSES: You may submit comments by any of the following methods:

- *E-mail: agnewam@state.gov.*
- *Mail (paper, disk, or CD-ROM submissions):* Andrina Agnew, U.S. Department of State, CA/PPT/FO/FC, 2100 Pennsylvania Ave., NW., 3rd Floor/Room 3040/SA–29, Washington, DC 20037.

You must include the DS form number (if applicable), information collection title, and OMB control number in any correspondence.

FOR FURTHER INFORMATION CONTACT: Direct requests for additional information regarding the collection listed in this notice, including requests for copies of the proposed renewal of information collection and supporting documents, to Andrina Agnew, U.S. Department of State, CA/PPT/FO/FC, 2100 Pennsylvania Ave., NW., 3rd Floor/Room 3040/SA–29, Washington, DC 20037, who may be reached on 202–663–2445 or at *agnewam@state.gov.*

SUPPLEMENTARY INFORMATION: We are soliciting public comments to permit the Department to:

- Evaluate whether the proposed information collection is necessary for the proper performance of our functions.
- Evaluate the accuracy of our estimate of the burden of the proposed collection, including the validity of the methodology and assumptions used.
- Enhance the quality, utility, and clarity of the information to be collected.
- Minimize the reporting burden on those who are to respond, including the use of automated collection techniques or other forms of technology.

Abstract of proposed collection: The form is used prior to passport issuance and solicits information relating to the loss or theft of a valid U.S. passport. The information is used by the United States Department of State to ensure that no person shall bear more than one valid or potentially valid U.S. passport book and passport card at any one time, except as authorized by the Department, and is also used to combat passport fraud and misuse.

Methodology: This form is used in conjunction with the Form DS–11, Application for a U.S. Passport, or submitted separately to report loss or theft of a U.S. passport. Passport Services collects the information when a U.S. citizen or non-citizen national applies for a new U.S. passport and has been issued a previous, still valid U.S. passport that has been lost or stolen, or when a passport holder independently reports it lost or stolen. Passport applicants can either download the form from the Internet or pick one up at any Passport Agency or Acceptance Facility.

Dated: October 10, 2008.

Brenda S. Sprague,

Deputy Assistant Secretary for Passport Services, Bureau of Consular Affairs, Department of State.

[FR Doc. E8–24907 Filed 10–17–08; 8:45 am]

BILLING CODE 4710–06–P

DEPARTMENT OF STATE

[Public Notice: 6411]

60-Day Notice of Proposed Renewal Information Collection: Form DS–0086, Statement of Non-Receipt of a Passport, 1405–0146.

ACTION: Notice of request for public comments.

SUMMARY: The Department of State is seeking Office of Management and Budget (OMB) approval for the renewal of an information collection described below. The purpose of this notice is to allow 60 days for public comment in the **Federal Register** preceding submission to OMB. We are conducting this process in accordance with the Paperwork Reduction Act of 1995.

- *Title of Information Collection:* Statement of Non-Receipt of a Passport.
- *OMB Control Number:* 1405–0146.
- *Type of Request:* Revision of a Currently Approved Collection.
- *Originating Office:* Bureau of Consular Affairs, CA/PPT/FO/FC.
- *Form Number:* DS–0086.
- *Respondents:* Individuals or Households.
- *Estimated Number of Respondents:* 60,000.
- *Estimated Number of Responses:* 60,000.
- *Average Hours per Response:* 5 minutes.
- *Total Estimated Burden:* 5,000 hours.
- *Frequency:* On occasion.
- *Obligation To Respond:* Required to Obtain or Retain a Benefit.

DATES: The Department will accept comments from the public up to 60 days from October 20, 2008.

ADDRESSES: You may submit comments by any of the following methods:

- *E-mail: agnewam@state.gov.*
- *Mail (paper, disk, or CD–ROM submissions):* Andrina Agnew, U.S. Department of State, CA/PPT/FO/FC, 2100 Pennsylvania Ave, NW., 3rd Floor/Room 3040/SA–29, Washington, DC 20037.

You must include the DS form number (if applicable), information collection title, and OMB control number in any correspondence.

FOR FURTHER INFORMATION CONTACT: Direct requests for additional information regarding the collection listed in this notice, including requests for copies of the proposed information collection and supporting documents, to Andrina Agnew, U.S. Department of State, CA/PPT/FO/FC, 2100 Pennsylvania Ave, NW., 3rd Floor/Room 3040/SA–29, Washington, DC 20037, who may be reached at 202–663–2445 or at *agnewam@state.gov.*

SUPPLEMENTARY INFORMATION: We are soliciting public comments to permit the Department to:

- Evaluate whether the proposed information collection is necessary for the proper performance of our functions.
- Evaluate the accuracy of our estimate of the burden of the proposed collection, including the validity of the methodology and assumptions used.
- Enhance the quality, utility, and clarity of the information to be collected.
- Minimize the reporting burden on those who are to respond, including the use of automated collection techniques or other forms of technology.

Abstract of Proposed Collection

The Statement of Non-Receipt of a Passport, Form DS–0086, is used by Consular Officers, Passport Specialists, and Acceptance Agents to collect information for the purpose of issuing a second passport to customers who have not received the passport for which they originally applied.

The information is used by the Department of State to ensure that no person shall bear more than one valid or potentially valid U.S. passport book and U.S. passport card at any one time, except as authorized by the Department, and also aids in combating passport fraud and misuse.

Methodology

Passport applicants who do not receive their passports are required to complete a Statement of Non-Receipt of a Passport, Form DS–0086. Passport applicants can either download the form from the Internet or pick one up from an Acceptance Facility/Passport Agency. The form must be completed, signed, and then submitted to the Acceptance Facility/Passport Agency for passport re-issuance.

Dated: October 10, 2008.

Brenda S. Sprague,

Deputy Assistant Secretary for Passport Services, Bureau of Consular Affairs, Department of State.

[FR Doc. E8–24908 Filed 10–17–08; 8:45 am]

BILLING CODE 4710–06–P

DEPARTMENT OF STATE

[Delegation of Authority No. 318]

Delegation by the Secretary of State to the Under Secretary for Arms Control and International Security of Authorities in Section 2(b)(4) of the Export-Import Bank Act

By virtue of the authority vested in me as Secretary of State, including Section 1 of the State Department Basic Authorities Act, as amended (22 U.S.C. 2651a), I hereby delegate to the Under Secretary for Arms Control and International Security the functions conferred on the Secretary of State by Section 2(b)(4) of the Export-Import Bank Act.

Any act, executive order, regulation, or procedure subject to, or affected by, this delegation shall be deemed to be such act, executive order, regulation, or procedure as amended from time to time.

Notwithstanding this delegation of authority, the Secretary or the Deputy Secretary may at any time exercise any authority or function delegated by this delegation of authority.

This delegation of authority shall be published in the **Federal Register**.

Dated: October 1, 2008.

Condoleezza A. Rice,

Secretary of State, Department of State.

[FR Doc. E8–24914 Filed 10–17–08; 8:45 am]

BILLING CODE 4710–10–P

DEPARTMENT OF STATE

[Delegation of Authority No. 317]

Delegation by the Secretary of State to the Under Secretary for Arms Control and International Security of Authorities in Section 821 of the Nuclear Proliferation Prevention Act

By virtue of the authority vested in me as Secretary of State, including Section 1 of the State Department Basic Authorities Act, as amended (22 U.S.C. 2651a) and the Presidential Memorandum for the Secretary of State, the Secretary of the Treasury, the Secretary of Defense, the Secretary of Commerce, and the Director of National Intelligence—Assignment of Certain Functions Relating to Procurement Sanctions on Persons Engaging in Export Activities that Contribute to Proliferation, dated March 5, 2007 (72 FR 11283), I hereby delegate to the Under Secretary for Arms Control and International Security, the functions conferred on the Secretary of State by said Presidential Memorandum under section 821 of the Nuclear Proliferation

Prevention Act, FY 94–95 Foreign Relations Authorization Act (Pub. L. 103–236) (the Act), relating to sanctions for nuclear proliferation.

All functions assigned under the Act shall be exercised utilizing the appropriate interagency groups prior to exercising the sanction authority delegated herein.

Any act, executive order, regulation, or procedure subject to, or affected by, this delegation shall be deemed to be such act, executive order, regulation, or procedure as amended from time to time.

Notwithstanding this delegation of authority, the Secretary or the Deputy Secretary may at any time exercise any authority or function delegated by this delegation of authority.

This delegation of authority shall be published in the **Federal Register**.

Dated: October 1, 2008.

Condoleezza A. Rice,

Secretary of State, Department of State.

[FR Doc. E8–24916 Filed 10–17–08; 8:45 am]

BILLING CODE 4710–10–P

DEPARTMENT OF TRANSPORTATION

Federal Highway Administration

[FHWA Docket No. FHWA–2006–26383]

Publication of Final Guidance on the Congestion Mitigation and Air Quality Improvement (CMAQ) Program

AGENCY: Federal Highway Administration (FHWA), DOT.

ACTION: Notice of publication of final guidance.

SUMMARY: The purpose of this notice is to announce the publication of CMAQ final guidance. Sections 1101, 1103 and 1808 of the Safe, Accountable, Flexible, Efficient Transportation Equity Act: A Legacy for Users (SAFETEA–LU) (Pub. L. 109–59, Aug. 10, 2005) [1] amend the Congestion Mitigation and Air Quality Improvement (CMAQ) Program, and authorize $8.6 billion to support the CMAQ program in 2005–2009. The interim guidance went into effect October 31, 2006; however, we solicited comments on the interim guidance on December 19, 2006, at 71 FR 76038. This notice describes and discusses comments we received and announces the publication of the final CMAQ guidance. The notice also describes the effect of a provision of the Energy Independence and Security Act of 2007, Pub. L. 110–140 that affects CMAQ funding. This provision became effective on December 20, 2007, beyond the time for submitting comments on the interim guidance.

FOR FURTHER INFORMATION CONTACT: Mike Koontz, Office of Natural and Human Environment, (202) 366–2076, *michael.koontz@dot.gov*; or Diane Liff (202) 366–6203, *diane.liff@dot.gov*, or Harold Aikens (202) 366–1373, *harold.aikens@dot.gov*, Office of the Chief Counsel, Federal Highway Administration, 1200 New Jersey Avenue, SE., Washington, DC 20590. Office hours are from 7:45 a.m. to 4:15 p.m., e.t., Monday through Friday, except Federal holidays.

SUPPLEMENTARY INFORMATION:

Electronic Access

Internet users may access this document, the notice of interim guidance and request for comment, and all comments received by the U.S. Department of Transportation (DOT) by using the Federal eRulemaking portal at *http://www.regulations.gov*. It is available 24 hours each day, 365 days each year. Electronic submission and retrieval help and guidelines are available under the help section of the Web site.

An electronic copy of this document may also be downloaded by accessing the Office of the Federal Register's home page at: *http://www.archives.gov* or the Government Printing Office's Web page at *http://www.gpoaccess.gov/nara*.

An electronic version of the final CMAQ guidance may be downloaded from the FHWA Web page at: *http://www.fhwa.dot.gov/environment/cmaq06gm.htm*. It is also attached for reference below.

Background

The CMAQ program was created by the Intermodal Surface Transportation Efficiency Act of 1991 (ISTEA) (Pub. L. 102–240, Dec. 18, 1991) and continued under the Transportation Equity Act for the 21st Century (TEA–21) (Pub. L. 105–178; Oct. 1998). Through 2005, the program supported nearly 16,000 transportation projects across the country. In SAFETEA–LU, the most recent authorization of the Federal-aid highway program, Congress amended the CMAQ program and authorized funding to support the CMAQ program in 2005–2009 (see sections 1101, 1103 and 1808 of SAFETEA–LU). More than $8.6 billion are authorized over the 5-year program (2005–2009), with annual authorization amounts increasing each year during this period.

This final guidance updates and replaces previous program guidance issued in 1999. It focuses primarily on project eligibility provisions and identifies the types of projects that are eligible for CMAQ support. It also provides information on how CMAQ apportionments are calculated and the geographic areas where CMAQ funds can be used; discusses the project selection process and requirements for analyzing emissions benefits from potential projects as part of the selection process; and examines Federal, State and Metropolitan Planning Organization (MPO) program administration responsibilities.

This final guidance includes discussions and directions on new or highlighted CMAQ topics under SAFETEA–LU and, in particular, emphasizes diesel engine retrofits and cost-effective congestion mitigation activities as priorities for CMAQ expenditures. It also provides relative cost-effectiveness data on various eligible project types to help inform the CMAQ project selection process.

Discussion of Comments Received to the Notice of Interim Guidance

The FHWA published its Notice of Interim Guidance and Request for Comment on December 19, 2006 (71 FR 76038). In response to the notice, the FHWA received 42 comments. Of the 42 comments, 11 were submitted by or on behalf of transportation advocacy organizations, 9 were submitted by metropolitan planning organizations (MPO) or other similar regional governmental entities, 5 were received from State departments of transportation or other State government agencies, 3 were received from county governments, 2 from counsel representing transportation organizations, 2 from environmental advocacy organizations, and 1 comment was submitted by a private citizen. It should be noted that the total does not sum to the 42 docket entries due to duplication associated with edited and resent documents and separate submittals for attachments. The FHWA considered each of these comments in adopting this final guidance. Following is a section-by-section analysis of the docketed comments and the FHWA's conclusions regarding issues raised:

Section-by-Section Discussion of Comments

Section IV. Priority for Use of CMAQ Funds

A total of 14 comments were received about the guidance's treatment of project prioritization and selection for cost-effective CMAQ funded programs and activities, specifically diesel retrofits. The only comment received

[1] 23 U.S.C. 149 (2005).

regarding the priority of congestion relief projects (see comment below regarding the eligibility of single-occupant vehicle (SOV) capacity increases) pertained to items that are beyond the scope of this guidance.

Respondents suggested a spectrum of possibilities. Some, noting the flexibility of CMAQ as its biggest asset, recommended leaving the priority and selection to the local decision makers. In particular, many State and local agencies, and organizations representing State and local governments, pointed to the SAFETEA–LU savings language, which states that the CMAQ program is not intended to disturb the existing authorities and roles of governmental agencies in making final project selections.

Others suggested making cost effectiveness the sole reason to support project or program selection and sought mandatory set-asides for diesel retrofit projects. Some diesel retrofit manufacturers and related trade and air quality associations proposed new language for the guidance that would more strongly emphasize the priority of diesel retrofits. One group favoring priority of diesel retrofits proposed a number of ways that this could be done including: (1) Developing a point system for the award of CMAQ dollars to give (a higher) weight to retrofit projects; (2) utilizing an overmatch where the State share of funding would be greater for diesel retrofit projects, thereby necessitating less than a 20 percent match by project sponsors; (3) dedicating a specific percentage of total CMAQ funds to diesel retrofits; and (4) requiring States and MPOs, in situations where projects other than diesel retrofits are selected, to justify their rationale for choosing other less cost effective projects.

There were other comments proposing variations on the theme of putting more emphasis on the benefits of diesel retrofit projects through a ratio or weighting formula, such as those used in California's Carl Moyer grant program. Some commenters also suggested that since some diesel retrofit projects reduced both particulate matter (PM) and ozone precursors, the final guidance should make these projects eligible for CMAQ funding in ozone nonattainment and maintenance areas as well.

In general, the comments received supported a balanced approach by maintaining the guidance language that promotes the idea that cost effectiveness evaluations should guide the program prioritization and project selection, with a special focus on diesel retrofit and congestion reduction, while also continuing to recognize that successfully improving air quality and reducing congestion depends on a diverse mixture of activities and efforts.

We believe that the existing language in the interim guidance provides adequate emphasis related to project priority and selection for use of CMAQ funds. Therefore, no changes were made to this section. Our decision not to change this section was based on our understanding of Congress' intent in this matter. Section 1808 of SAFETEA–LU includes a ''savings clause'' that states, ''[t]his paragraph is not intended to disturb the existing authorities and roles of governmental agencies in making final project selections.'' [2] The savings clause demonstrates, in our view, Congress' understanding that many factors go into program funding decisions, and Congress' intention that the statutory diesel retrofit priority not disturb existing authorities and roles in project selection. Thus, under the final guidance, State and local authorities remain responsible for the selection and prioritization of projects under the CMAQ program that will best reduce air pollution and congestion, while, at the same time, fit the local fiscal, transportation, environment, and political landscape.

Our conclusion regarding this legislative intent is further supported by the relevant legislative history. In addressing funding priority, the Conference Report on H.R. 3 (SAFETEA–LU) states: ''The priority is further clarified to ensure that governmental agencies retain existing authorities and roles in making final project selections. These clarifications to the original Senate priority language are intended to retain needed flexibility in utilizing CMAQ funds while providing States with direction to focus on cost-effectiveness as an important consideration in distributing program funds.'' H.R. Rep. No. 109–203, at H7462 (July 28, 2005)(Conf. Rep.). In addition, a subsequent section of the Conference Report, Priorities Provision in Diesel Retrofit, further expands on this point: ''Conferees expect that other priorities can still be pursued with applicable funds. Priority is not absolute and exclusive. That is one reason why the paragraph also includes language establishing that this paragraph is not intended to disturb existing authorities and roles in project selections.'' H.R. Rep. No. 109–203, at H7467 (July 28, 2005) (Conf. Rep.).

The statutory language and legislative history also support the FHWA's decision declining to make changes proposed in a September 19, 2007, letter to the Office of Management and Budget (OMB) by Senators Carper, Clinton, Isakson, and Voinovich, which we have placed in the docket. The letter requests that additional language be inserted in the final guidance to create a presumption requiring diesel retrofit projects to be funded first, and, further, requiring States and MPOs funding other than diesel retrofit projects to publish written justification for their selections. In addition, the letter requests revision of the definition of ''cost effective'' in the final guidance, by limiting that term to the cost per ton of emission reductions by pollutant.

In our view, the requested changes would remove or greatly diminish the authority of States and MPOs to make final project selections. The plain language of the ''savings clause,'' as well as that provision's legislative history, discussed above, do not support additional limits on project selection or the imposition of a publication burden on States or MPOs. Adoption of the requested presumption would also limit the variety of eligible CMAQ projects and programs permitted under the statute (see 23 U.S.C. 149(c)). In addition, the requested revision of the definition of ''cost-effective'' would diminish the authority of States and MPOs to select a mix of project and program activities that best reflect the air quality and congestion challenges in their local areas.

The final guidance does, however, encourage States and local agencies to take the priority language into account when selecting and funding their CMAQ projects. One good example of how this might be undertaken is an outreach effort initiated by Oregon's Rogue Valley Metropolitan Planning Organization (RVMPO), which sent a letter to 10 private companies within the Rogue Valley community to initiate a conversation about using Federal funding for diesel retrofits by inviting them to a diesel retrofit workshop to discuss how retrofits could benefit the various companies and improve air quality in the area.

Section V. Annual Apportionments of CMAQ Funds to States

Two comments called for a set-aside of CMAQ funds for diesel retrofit projects. Citing the importance of diesel retrofit projects, the respondents contended that a predetermined amount or percentage share of CMAQ apportionments should be reserved solely for diesel retrofits.

The FHWA has neither the statutory authority nor the administrative discretion to establish or enforce such a

[2] 23 U.S.C. 149(f)(3)(B) (2005).

set-aside. Funding under the CMAQ program is apportioned to the States after a limited number of takedowns (*e.g.*, 2 percent for State Planning and Research (SP&R)). Other than this very limited amount of CMAQ set-aside, the vast majority of remaining apportioned funds is available to the States at their discretion, provided general project eligibility requirements are met.

Two comments were received supporting a change in the final guidance that would allow a 100 percent Federal share for diesel projects. Respondents asserted that the additional Federal-aid funding would serve as a financial incentive to generate greater interest in diesel retrofit projects. As with the creation of new set-asides, the FHWA lacked statutory authority to increase the Federal match on CMAQ projects when these comments were received. However, subsequent enactment of the Energy Independence and Security Act of 2007, Public Law 110–140 (December 20, 2007) authorizes an increase in the Federal share of CMAQ funding up to 100 percent, at the discretion of the State for CMAQ projects obligated in FY 2008 and FY 2009.[3]

Section VI. Geographic Areas That Are Eligible To Use CMAQ Funds

Several respondents requested clarification of the definition of ozone nonattainment areas, largely preferring removal of the qualifiers ''one-hour'' and ''eight-hour'' ozone. These comments were submitted in apparent anticipation of possible changes arising from recent court decisions that may or may not reinstate some of the requirements attributed to former one-hour ozone areas. In view of the uncertainties surrounding this matter, we have decided not to revise the definitions at this time.

In addition, similar comments were submitted in favor of consolidating the references to the two particulate matter terms. We have consolidated the terms in a few sections of the final guidance to avoid confusion between the two qualifiers for designated ozone nonattainment areas. However, we have done so only where the qualifier was not necessary, *i.e.*, where the plain term ''ozone nonattainment area'' was sufficient. References to both one-hour and eight-hour ozone in other sections were included by necessity. For example, in outlining our treatment of CMAQ eligibility for the former one-hour areas where eight-hour ozone designations were not forthcoming, we discussed the areas separately and, in turn, used the two distinct terms. We have retained this discussion in the final guidance. As for the treatment of the two terms for particulate matter—PM–2.5 and PM–10—the interim guidance did not make a distinction between the two levels of the pollutant, and we will retain use of the singular term ''particulate matter'' or ''PM'' in the final guidance.

One respondent made a case for modifying CMAQ geographic eligibility to include attainment areas, based on the need to provide resources to areas so they might avoid slipping into nonattainment status (*i.e.*, use of the program as a preventive measure). While the commenter provides a compelling argument for application of CMAQ funding in attainment areas, and while there may be merit to such an extension of the program, the statute is clear that CMAQ funding is restricted to areas that are or were designated as nonattainment for ozone, carbon monoxide, or particulate matter (23 U.S.C. 149(a)). FHWA does not have the authority to make such a discretionary modification to fundamental, statutory eligibility requirements. Only those areas attaining the National Ambient Air Quality Standards (NAAQS) that are identified by Environmental Protection Agency (EPA) as maintenance areas or required to file maintenance plan documentation are eligible for CMAQ investments.

Section VII. Project Eligibility Provisions

A number of respondents commented on the continuation of the 3-year limit on using CMAQ funds for operating costs, with responses both favoring the limit and calling for an end to this aspect of program eligibility.

The 3-year limit on operating costs has been retained in the final guidance. The FHWA discussed our preference for a limitation on using CMAQ funds for operational support in the interim guidance. We continue to look upon long-term, limitless, operational support as a practice contrary to 23 U.S.C. 116, which places the responsibility for maintenance of transportation resources on States. Ending the 3-year limit for operational support would be akin to shifting this maintenance role to the Federal level. The focus of the CMAQ program is to provide new or expanded transportation resources that provide an air quality benefit, not the long-term continuation and support of existing services.

One respondent called for the establishment of CMAQ eligibility for transit station rehabilitations. The commenter discussed the benefits of projects that seek to renovate or restore transit stations and terminals in need of repair, citing the corresponding increase in ridership that may ensue.

The FHWA and Federal Transit Administration (FTA) have a longstanding policy on transit station projects. Those endeavors that involve existing facilities must expand the carrying capacity of the station or terminal. This policy—written into the interim guidance—has been retained in the final guidance. The agencies are aware of the capital-intensive nature of these projects. No project that attempts to rebuild, renovate, or restore a major transit hub will be completed inexpensively. However, given the air quality goals of the CMAQ program, it is unlikely that restoration projects that leave system capacity at status quo levels will have any impact on network ridership and, hence, on clean air efforts. Both FHWA and FTA addressed this question in a January 2003 memorandum that elaborated on this policy.[4]

There were a few comments calling for the clarification of eligibility for projects that targeted reductions in pollutant precursors. We have reviewed the interim guidance with such clarification in mind and have retained the language as written in the final guidance. The eligibility of ozone and particulate matter precursors is discussed in a number of areas of the guidance document, most notably in part A.3., entitled ''Emission Reduction,'' in Section VII. ''Project Eligibility.''

One respondent called for the further extension of eligibility guidelines to include capacity expansions for SOV highways. The commenter asserted that the congestion mitigation aspects of the CMAQ program provide a rationale for such an expansion of eligibility. Use of CMAQ funding for the provision of additional capacity available to SOVs is prohibited by 23 U.S.C. 149(b). This prohibition was part of the Intermodal Surface Transportation Efficiency Act of 1991, which created the CMAQ program and has been carried forward with each reauthorization of transportation legislation, including SAFETEA–LU. The sole exception allowed is for construction of high-occupancy vehicle (HOV) facilities available to SOVs only at off-peak times of the day. The

[3] ''CMAQ PROJECTS—The Federal share payable on account of a project or program carried out under section 149 with funds obligated in fiscal year 2008 or 2009, or both, shall be not less than 80 percent and, at the discretion of the State, may be up to 100 percent of the cost thereof.'' Sec. 1131(2).

[4] This memorandum is available at: *http://www.fhwa.dot.gov/environment/cmaqpgs/stationm.htm.*

exception includes HOV facilities that are available to High Occupancy Toll (HOT), low-emission, and other vehicles as authorized under 23 U.S.C. 166.

Several commenters objected to the interim guidance's change in policy disallowing operating assistance for the initial 3 years of operations of major transit capital investment projects (New Starts). As stated in the interim guidance, this change was made to be consistent with FTA's requirement that project sponsors establish long-term, dedicated sources of non-Federal funds for operating and maintaining New Starts. The point was made in the comments, however, that short-term, initial funding with CMAQ has never been a substitute for the development of long-term, non-Federal sources of funding, but rather has served as an important supplementary funding source, while farebox revenue is growing at the start of system operations. FTA acknowledges that transit agencies that used CMAQ funds for this purpose in the past also went on to establish sources of non-Federal funding to support operations for the long term.

Another reason for the proposed change in policy was to return to the original intent in providing operating assistance under the CMAQ program. The original intent was to fund demonstrations of new types of service that could be easily terminated if they were not successful; it was not to provide operating assistance for permanent infrastructure projects. However, a review of the types of projects that have received operating assistance in the recent past indicated a number of projects that are not ''demonstrations.'' Some were major transit capital investment projects that did not involve Federal New Starts funding. The review showed there is a history of supporting permanent infrastructure as well as the demonstration-type projects that were originally envisioned. In light of this, it would be inconsistent for such non-Federal projects to continue receiving CMAQ operating assistance while the same type of project, if federally funded, was denied CMAQ operating assistance. Therefore, FTA has decided to return to the previous policy of allowing operating assistance for New Starts. The wording in the interim guidance disallowing operating assistance for New Start projects has been removed.

One respondent suggested language that would prohibit States from using CMAQ funds to compete with services provided by the private sector. The Federal-aid highway program is a federally assisted State program. Consequently, the States exercise sovereignty in their project selection for all the Federal-aid highway program categories, including the CMAQ program. Under 23 U.S.C. 145, ''Federal-State Relationship,'' the States' role in determining transportation projects is protected. Given this statutory support for the States' position, the FHWA has no authority to amend the guidance with such a restriction, although we have retained our policy discouraging the use of CMAQ support for projects which may compete directly with private business services.

Section IX. Program Administration

Several responders commented that the burden of preparing and submitting the annual reports required for the CMAQ program is understated and that the schedule for submittals is somewhat aggressive.

We have outlined the burden or staff time requirements for the annual reports, as required under the Paperwork Reduction Act, 44 U.S.C. 3501–3520, in a separate **Federal Register** notice, 71 FR 67420 (November 21, 2006), and in our associated report to OMB. In view of the comments and further study of the issue, the FHWA has increased the time estimates for annual reports from the initial 6 hours for filing the report to a more representative 125 hours, which better reflects the necessary workload associated with compiling the information for State DOTs, metropolitan planning organizations, and other units of government. The final guidance incorporates this change.

As to the schedule for submittals, we have extended the due date from February to March. This change was included in the interim guidance; we will retain the extension in the final guidance.

Appendix 4: Comparative Cost-Effectiveness of Potential CMAQ-Funded Retrofits

There were 16 comments on the treatment of cost-effectiveness data, specifically as they appeared in Appendix 4 of the interim guidance.

Diesel retrofits manufacturers and related trade and air quality associations made several recommendations for changes to Appendix 4. First, they suggested weighing the cost-effectiveness data for activities that reduce PM with those that reduce NO_X and volatile organic compounds (VOCs) so that the data can be directly compared to each other. Second, they suggested that we include the diesel retrofit technologies in Figures A and D along with the projects that reduce NO_X and VOCs. One commenter commissioned a study indicating that reducing a ton of NO_X has health benefits 14.2 times that of VOCs, while reducing a ton of PM has health benefits of 117.5 times that of VOCs.

State and local agencies and national associations commented that the data presented in Appendix 4 were based on a dated study of project types that does not account for improvements in emission reduction technologies and that includes assumptions that may alter the cost-effectiveness of projects. Specifically, commenters suggested that the data for inspection and maintenance programs were no longer accurate. Commenters also noted that cost-effectiveness is only one of the selection criteria and should not be the sole basis for decision-making.

Since the release of the interim guidance, the EPA has released its own analysis of the cost-effectiveness of diesel engine retrofit technologies and other mobile source emission reduction activities as required by the SAFETEA–LU. As such, we have removed Appendix 4 from our guidance and have instead provided an electronic link to the EPA guidance document providing this research (*http://www.epa.gov/otaq/stateresources/policy/general/420b07006.pdf*). We intend to rely on the EPA data in determining cost effectiveness.

Authority: Sections 1101, 1103 and 1808 of Pub. L. 109–59)

Issued on: October 7, 2008.

Thomas J. Madison, Jr.,

Federal Highway Administrator.

The Congestion Mitigation and Air Quality (CMAQ) Improvement Program Under the Safe, Accountable, Flexible, Efficient Transportation Equity Act: A Legacy for Users; Final Program Guidance

October, 2008

The guidance contained in this document is intended to be nonbinding, except insofar as it references existing statutory requirements. In this guidance document, the use of mandatory language such as ''shall,'' ''must,'' ''required,'' or ''requirement'' is only used to reflect statutory or regulatory mandates and does not create new requirements. This guidance does not create or confer any rights for or on any person and should not be construed as rules of general applicability and legal effect.

I. Introduction

The CMAQ program was created under the Intermodal Surface Transportation Efficiency Act (ISTEA)

of 1991, continued under the Transportation Equity Act for the 21st Century (TEA–21), and reauthorized by the Safe, Accountable, Flexible, Efficient Transportation Equity Act: A Legacy for Users (SAFETEA–LU).[5] Over $8.6 billion is authorized over the five-year program (2005–2009), with annual authorization amounts increasing each year during this period. Through 2005, the program has supported nearly 16,000 transportation projects across the country.

This guidance replaces the April 1999 version and provides information on the CMAQ program, including:

- Authorization levels and apportionment factors specific to the SAFETEA–LU.
- Flexibility and transferability provisions available to States.
- Geographic area eligibility for CMAQ funds.
- Project eligibility information.
- Project selection processes.
- Program administration.

Appendices 1–3 provide updated statutory language relating to the CMAQ program. Appendix 4 provides supplemental information on diesel retrofit projects.

Information on the current annual apportionment to each State and an electronic version of this guidance are available at *http://www.fhwa.dot.gov/environment/cmaqpgs/index.htm.*

This guidance document has been prepared by the Air Quality Team in FHWA's Office of Environment and Planning.

II. Program Purpose

The purpose of the CMAQ program is to fund transportation projects or programs that will contribute to attainment or maintenance of the national ambient air quality standards (NAAQS) for ozone, carbon monoxide (CO), and particulate matter (PM).

The CMAQ program supports two important goals of the Department of Transportation: Improving air quality and relieving congestion. While these goals are not new elements of the program, they are strengthened in a new provision added to the CMAQ statute by SAFETEA–LU, establishing priority consideration for cost-effective emission reduction and congestion mitigation activities when using CMAQ funding.[6]

Reducing pollution and other adverse environmental effects of transportation projects and transportation system inefficiency have been long-standing objectives of the Department of Transportation. The strategic plans for the Department of Transportation and for the Federal Highway Administration both include performance measures specifically focused on reducing air pollution from transportation facilities. The CMAQ program provides funding for a broad array of tools to accomplish these goals. By choosing to fund a CMAQ project, a State or local government can improve air quality and make progress towards achieving attainment status and ensuring compliance with the transportation conformity provisions of the Clean Air Act.[7]

Reducing congestion is also a key objective of the Department of Transportation, and one that has gained increasing attention in the past several years. The cost of congestion, which negatively affects the U.S. economy, quality of life, and air quality, has risen dramatically in the last 25 years despite record levels of transportation investment. Some economists estimate that the overall cost of congestion to the U.S. economy approaches $200 billion a year. As a result, in May 2006, the Department of Transportation announced its *National Strategy to Reduce Congestion on America's Transportation Network* (the Congestion Initiative) that aims to meaningfully reduce the economic and social costs of congestion on our nation's highways and in other transportation facilities.[8] This strategy can be found at: *http://isddc.dot.gov/OLPFiles/OST/012988.pdf.*

Since congestion relief projects also reduce idling, the negative emissions impacts of ''stop and go'' driving, and the number of vehicles on the road, they have a corollary benefit of improving air quality. Based on their emissions reductions, these types of projects, including investments in improved system pricing and operations, are eligible for CMAQ funding.[9] The Department believes State and local governments can simultaneously reduce the costly impacts of congestion while also improving air quality.

III. Authorization Levels Under the SAFETEA–LU

A. Authorization Levels

Table 1 shows the SAFETEA–LU CMAQ authorization levels by fiscal year. The CMAQ funds will be apportioned to States each year based upon the apportionment factors discussed in Section V.

TABLE 1—SAFETEA–LU CMAQ AUTHORIZATION LEVELS

Fiscal year authorization	Amount authorized
FY 2005	$1,667,255,304
FY 2006	$1,694,101,866
FY 2007	$1,721,380,718
FY 2008	$1,749,098,821
FY 2009	$1,777,263,247

B. Equity Bonus

Similar to the minimum guarantee under the TEA–21, the Equity Bonus in SAFETEA–LU provides additional funding beyond the authorized levels so that each State receives a minimum percentage of its gas tax receipts back in the form of Federal-aid funds.[10]

C. Transferability of CMAQ Funds

Since transportation and environmental program priorities fluctuate, States may choose to transfer a limited portion of their CMAQ apportionment to the following Federal-aid highway programs: Surface Transportation Program (STP), National Highway System (NHS), Highway Bridge Program (HBP), Interstate Maintenance (IM), Recreational Trails Program (RTP), and the Highway Safety Improvement Program (HSIP).

States may transfer CMAQ funds according to the following provision: An amount not to exceed 50 percent of the quantity of the State's annual apportionment less the amount the State would have received if the CMAQ program had been authorized at $1,350,000,000.[11] For example, if the annual national apportionment is $1.75 billion and a State receives $10 million more than it would have received if the national apportionment had been $1.35 billion, the State can transfer up to $5 million to other programs. Any transfer of such funds must still be obligated in nonattainment and maintenance areas.[12] The amount of transferable funds will differ each year and by State, depending on overall authorization levels. Each year, the FHWA will inform States how much, if any, CMAQ funding is

[5] Public Law 109–59, 119 Stat. 1144 (Aug. 10, 2005).

[6] 23 U.S.C. 149(f)(3) (SAFETEA–LU § 1808(d)).

[7] 42 U.S.C. 7506 Section 176(c).

[8] Speaking before the National Retail Federation's annual conference on May 16, 2006, in Washington, DC, former U.S. Transportation Secretary Norman Mineta unveiled a new plan to reduce congestion plaguing America's roads, rails, and airports. *The National Strategy to Reduce Congestion on America's Transportation Network* includes a number of initiatives designed to reduce transportation congestion. The transcript of these remarks is available at the following URL: *http://www.dot.gov/affairs/minetasp051606.htm.*

[9] 23 U.S.C. 149(b)(5).

[10] 23 U.S.C. 105 (SAFETEA–LU § 1104).

[11] 23 U.S.C. 126(c).

[12] 23 U.S.C. 149(b).

transferable and will track this movement of CMAQ funds. States also may transfer CMAQ funds to other Federal agencies. The SAFETEA–LU provides additional flexibility to complete such transfers when the receiving Federal agency has entered into an agreement with the State to undertake an eligible Federal-aid project.[13] These opportunities apply to projects that have met all CMAQ eligibility requirements prior to the transfer.

D. CMAQ and Innovative Finance: State Infrastructure Bank (SIB) and Section 129 Loans

Projects with dedicated repayment streams, i.e., a consistent source of revenue, may be financed with loans through DOT's innovative finance program as an alternative or supplement to CMAQ funding.

State Infrastructure Banks are State-directed programs that allow Federal-aid funds to be lent to sponsors of eligible Federal-aid projects (any project under Title 23 or capital projects, as defined by 49 U.S.C. 5302, are eligible). SIBs may be capitalized with several Federal-aid highway apportionments including the National Highway System Program, the Surface Transportation Program, the Highway Bridge Program, the Interstate Maintenance Program, and the Equity Bonus program. (**Note:** CMAQ may not be used to *capitalize* a SIB, but SIB funds may be used to *finance* CMAQ projects). State funds also may be used to capitalize the SIB. The State then receives repayments over time that can be directed toward other transportation projects. For example, New York State was successful in utilizing its SIB to implement two truck stop electrification projects along the New York State Thruway.

Section 129 loans (23 U.S.C. 129(a)(7)) allow States to use Federal-aid highway apportionments to make loans for projects with dedicated revenue streams (this is only applicable to highway, bridge, tunnel, ferry boat, and ferry terminal projects). A Section 129 loan may be used to construct a truck stop electrification facility if the facility is located on the Interstate right-of-way.[14]

The SAFETEA–LU establishes a new SIB program under which all States are authorized to enter into cooperative agreements with the U.S. DOT to establish infrastructure revolving-funds eligible to be capitalized with Federal transportation funds.[15] The key difference between a Section 129 loan and a SIB is that a Section 129 loan usually provides financing to an individual project and funding a SIB capitalizes a financial entity that can assist multiple projects. The two loan programs have similar maximum allowable terms established by Federal law:

- Both public and private entities are eligible to be project sponsors.
- Repayments begin within 5 years of project completion.
- Maximum loan term is 30 years after project authorization (Section 129) or 30 years after first repayment (SIB).
- Interest rate may be set by State, at or below market rates.
- Loans can only be made up to 80 percent of eligible project costs (Section 129). For SIBs, loans can be made up to 80 percent of eligible project costs (although the non-Federal share can be reduced under 23 U.S.C. 120(b) if the sliding scale rate is used).

These innovative loan programs can increase the efficiency of States' transportation investments and significantly leverage Federal resources by attracting non-Federal public and private investment, and provide greater flexibility to the States by allowing other types of project assistance in addition to grant assistance. This type of financing is important for new technologies or start-up businesses that may have difficulty finding financing in the private capital markets. In addition to SIBs and section 129 loans, the FHWA also administers the Transportation Infrastructure Finance and Innovation Act (TIFIA) program, which provides Federal credit assistance to large-scale projects greater than $50 million.

The following example illustrates how a Section 129 loan could work to construct an idle-reduction facility on an Interstate right-of-way. A private party intends to build a stationary idle-reduction facility, and seeks grant funding for it from the State DOT. The idle reduction facility will eventually earn a profit by charging user fees, but since the capital costs are high, the private party needs assistance with financing the initial construction. Instead of providing an outright grant, the State could offer a loan of Federal-aid funds with flexible repayment terms. If the facility required $1 million for initial construction, the State could make a loan at 5 percent over 15 years. The State could accelerate the payments if the facility was more successful than expected, and delay repayment if the facility failed to meet revenue targets. The State could also build in credits for additional emissions reductions, providing incentives for additional loans or grants to idle reduction projects. More information on the DOT's innovative finance program is available at *http://www.fhwa.dot.gov/innovativefinance/.*

IV. Priority for Use of CMAQ Funds

The SAFETEA–LU directs States and MPOs to give priority to two categories of funding. First, priority is for diesel retrofits, particularly where necessary to facilitate contract compliance, and other cost-effective emission reduction activities, taking into consideration air quality and health effects. Second, priority is to be given to cost-effective congestion mitigation activities that provide air quality benefits.[16] Other projects also may be cost-effective. The priority provisions in the statute apply to the portion of CMAQ funds derived from the application of sections 104(b)(2)(B) and 104(b)(2)(C) of SAFETEA–LU, i.e., the CMAQ apportionment formula. They do not apply to areas where CMAQ funding has been derived from the minimum apportionment provisions.

In accordance with the SAFETEA–LU,[17] the EPA has released a guidance document, *The Cost Effectiveness of Heavy-Duty Diesel Retrofits and Other Mobile Source Emission Reduction Projects and Programs,* which provides cost-effectiveness data on diesel engine retrofit technologies and other CMAQ-eligible activities. It is available online at: *http://www.epa.gov/cleandiesel/publications.htm.*

In addition, the Transportation Research Board published *The Congestion Mitigation and Air Quality Improvement Program: Assessing 10 Years of Experience* in 2002, providing a number of effectiveness measures for both emissions and travel activity.

Though SAFETEA–LU establishes these CMAQ investment priorities, it also retains State and local agencies' authority in project selection. The law maintains the existing roles and authorities of public agencies, and substantial shifts in local procedures are not required by the SAFETEA–LU.[18] However, project selection should reflect the positive cost-effectiveness relationships highlighted in the EPA guidance. State and local transportation programs that implement a broad array of these cost-effective measures may record a more rapid rate of progress toward their clean air goals, since many of these endeavors generate immediate benefits. Local procedures that elevate

[13] 23 U.S.C. 132(a) (SAFETEA–LU § 1119).

[14] 23 U.S.C. 111(d) (SAFETEA–LU § 1412).

[15] 23 U.S.C. 190 (SAFETEA–LU § 1602).

[16] 23 U.S.C. 149(f)(3) (SAFETEA–LU § 1808(d)).

[17] 23 U.S.C. 149(f)(2)(c) (SAFETEA–LU § 1808(d)).

[18] 23 U.S.C. 149(f)(3)(B) (SAFETEA–LU § 1808(d)).

the importance of these efforts in project selection—and rate them accordingly—may accelerate the drive to air quality attainment.[19]

In addition to the SAFETEA–LU priority on cost-effectiveness, Section 176(c) of the Clean Air Act[20] requires that the FHWA and FTA ensure timely implementation of transportation control measures (TCMs) in applicable State Implementation Plans (SIPs). These and other CMAQ-eligible projects identified in approved SIPs should receive funding priority.

The FHWA recommends that States and MPOs develop their transportation/air quality programs using complementary measures that provide alternatives to single-occupant vehicle (SOV) travel while improving traffic flow through operational strategies and balancing supply and demand through pricing, parking management, regulatory, or other means.

V. Annual Apportionments of CMAQ Funds to States

A. CMAQ Apportionments

Federal CMAQ funds are apportioned annually to each State according to the severity of its ozone and CO problem (see Appendix 2). The population of each county (based upon Census Bureau data) that is in a nonattainment or maintenance area for ozone and/or CO is weighted by multiplying by the appropriate factor listed in Table 2. PM nonattainment and maintenance areas and former 1-hour areas, except those few 1-hour maintenance areas participating in Early Action Compacts, are not included in the apportionments.

Note: CMAQ apportionments and CMAQ eligibility are two different things. Some areas in which CMAQ funds may be spent are not included in the apportionments (see Section VI.).

TABLE 2—SAFETEA–LU CMAQ APPORTIONMENT FACTORS[21]

Pollutant	Classification at the time of annual apportionment	Weighting factor
Ozone (O_3) or (CO)	Maintenance (these areas had to be previously eligible as nonattainment areas—See Section VI.).	1.0
Ozone	Subpart 1 (“Basic”)	1.0
Ozone	Marginal	1.0
Ozone	Moderate	1.1
Ozone	Serious	1.2
Ozone	Severe	1.3
Ozone	Extreme	1.4
CO	Nonattainment	1.0
Ozone and CO	Ozone nonattainment or maintenance and CO nonattainment or maintenance.	1.2 × O_3 factor
All States—minimum apportionment	1/2 of 1 percent total annual apportionment of CMAQ funds	N/A

[21] 23 U.S.C. § 104(b)(2) (SAFETEA–LU 1103(d)).

CMAQ apportionments are calculated based on the nonattainment and maintenance areas that exist at the time of apportionment. Generally, apportionments are calculated prior to the beginning of each fiscal year.

B. Area Designations: Attainment vs. Nonattainment

Each State is guaranteed a minimum apportionment of one-half percent of the year’s total program funding, regardless of whether the State has any nonattainment or maintenance areas. These flexible funds or minimum apportionment funds can be used anywhere in the State for projects eligible for either CMAQ or the STP.[22]

The FHWA Budget Division identifies annual apportionments of CMAQ funds as either mandatory or flexible. All funding is considered mandatory for States with weighted populations yielding one-half percent or more of the authorized funds (based on the table above). Annual CMAQ funding apportioned through the application of sections 104(b)(2)(B) and 104(b)(2)(C) must be used for projects in nonattainment/maintenance areas.[23]

States with weighted populations yielding at least some apportioned value but less than one-half percent of the authorized funds receive both mandatory and flexible funds to reach the minimum apportionment. For example, if a State’s weighted population yields two tenths of one percent of the authorized funds, it would receive two tenths of one percent of the national funds as mandatory funds, and three tenths of one percent as flexible funds. Thus, 40 percent of the State’s funds would be mandatory and 60 percent would be flexible.

For States with no areas applicable to the apportionment table, their minimum apportionment, one-half percent, is all flexible funding. The FHWA reports the breakdown of mandatory and flexible funds by State in its fiscal year apportionment tables.

C. Apportionments and State Allocation

Notwithstanding the statutory formula for determining the apportionment amount, the State may use its CMAQ funds in any ozone, CO, or PM nonattainment or maintenance area. A State is under no statutory obligation to allocate CMAQ funds in the same way they are apportioned. States are encouraged to consult affected MPOs to determine regional and local CMAQ priorities and work with them to allocate funds accordingly.

D. Federal Share and State/Local Match Requirements

The Federal share for most CMAQ projects, generally, has been 80 percent. However, under the Energy Independence and Security Act of 2007,[24] the Federal share for eligible CMAQ projects carried out with funds obligated in fiscal year 2008 or 2009, or both, may be, at the discretion of the State, up to 100 percent of the cost of the project or program.

VI. Geographic Areas That Are Eligible To Use CMAQ Funds

A. Eligible Areas

CMAQ funds may be invested in all ozone, CO, and PM nonattainment and maintenance areas. Funds also may be

[19] U.S. House, *Safe, Accountable, Flexible, Efficient Transportation Equity Act, a Legacy for Users, Conference Report* (to accompany H.R. 3) (109 H. Rpt. 203), Section 1938, *Priorities Provision in Diesel Retrofit.*

[20] 42 U.S.C. 7506 Section 176(c)(2)(B).

[22] 23 U.S.C. 149(c) (SAFETEA–LU § 1808(c)).

[23] 23 U.S.C. 149(b).

[24] Pub. L. 110–140, Sect. 1131 (December 20, 2007).

spent in the few remaining 1-hour ozone maintenance areas (these counties also have Early Action Compacts in place), since the 1-hour standard remains in effect for these areas.

Funds also may be used for projects in proximity to nonattainment and maintenance areas if the benefits will be realized primarily within the nonattainment or maintenance area. The delineation of an area considered ''in proximity'' should be discussed with the FHWA and FTA field offices and elevated to headquarters if necessary.

B. Maintenance Areas

CMAQ funds may be invested in maintenance areas that have approved maintenance plans under CAA section 175A. In States with ozone or CO maintenance areas but no nonattainment areas, mandatory CMAQ funds must be used in the maintenance areas.[25]

C. Maintenance Plan Requirement, SAFETEA–LU

CMAQ funds may be invested in former 1-hour ozone areas that were not designated under the 8-hour standard but where the 1-hour standard has been revoked. Since these areas are required to file maintenance plans, they are considered eligible for CMAQ funding under provisions of the SAFETEA–LU.[26]

D. Flexible Funds in PM Areas

While States may use flexible CMAQ funding anywhere and for any CMAQ- or STP-eligible project (see V.B. on minimum apportionment), the FHWA encourages States and MPOs to evaluate the cost-effectiveness and benefits to public health of targeting flexible CMAQ funding to projects that reduce PM. Examples of such projects include implementing a diesel retrofit or idle reduction program, constructing freight/intermodal transfer facilities, traffic signalization, or ITS projects that reduce congestion, paving dirt roads, and purchasing street sweeping equipment.

VII. Project Eligibility Provisions

A. Project Eligibility: General Conditions

To be eligible for CMAQ funds, a project must be included in the MPO's current transportation plan and TIP (or the current STIP in areas without an MPO). In nonattainment and maintenance areas, the project also must meet the conformity provisions contained in section 176(c) of the Clean Air Act and the transportation conformity regulations.[27] In addition, all CMAQ-funded projects need to complete National Environmental Policy Act (NEPA) requirements and meet basic eligibility requirements for funding under titles 23 and 49 of the United States Code.

The following should guide CMAQ eligibility decisions:

1. Capital Investment

CMAQ funds may be used to establish new or expanded transportation projects or programs that reduce emissions, including capital investments in transportation infrastructure, congestion relief efforts, diesel engine retrofits, or other capital projects.

2. Operating Assistance

There are several general conditions that must be met for operating assistance to be eligible under the CMAQ program:

a. Operating assistance is limited to new transit services, intermodal facilities, and travel demand management strategies (including traffic operation centers); and the incremental cost of expanding existing transit services.

b. In using CMAQ funds for operating assistance, the intent is to help start up viable new transportation services that can demonstrate air quality benefits and eventually cover their costs as much as possible. Other funding sources should supplement and ultimately replace CMAQ funds for operating assistance, as these projects no longer represent additional, net air quality benefits but have become part of the baseline transportation network.

c. Operating assistance includes all costs of providing new transportation services, including, but not limited to, labor, fuel, administrative costs, and maintenance.

d. When CMAQ funds are used for operating assistance, non-Federal share requirements still apply.

e. With the focus on start-up costs only, operating assistance under the CMAQ program is limited to three years. The provisions in 23 U.S.C. 116 place responsibilities for maintenance on States.[28] Since facility maintenance is akin to operations, three years of CMAQ assistance provides adequate incentive and flexibility while not creating a pattern of excessive or even perpetual support. Exceptions are listed below under VII.D.7 Travel Demand Management, VII.D.8 Public Education, and VII.D.10 Carpooling and Vanpooling.

3. Emission Reduction

Air quality improvement is defined by several distinct terms in 23 U.S.C. § 149. These terms include contribution to attainment, reduction in pollution, air quality benefits, and others. For purposes of this guidance, the FHWA uses *emission reduction* to represent this group of terms. CMAQ-invested projects or programs must reduce CO, ozone precursor (NO_X and VOCs), PM, or PM precursor (e.g., NO_X) emissions from transportation; these reductions must contribute to the area's overall clean air strategy and can be demonstrated by the assessment that is required under this guidance.[29] States and MPOs also may consider the ancillary benefits of eligible projects, including greenhouse gas reductions, congestion relief, safety, or other elements, when programming CMAQ funds, though such benefits do not alone establish eligibility.

4. Planning and Project Development

Activities in support of eligible projects also may be appropriate for CMAQ investments. Studies that are part of the project development pipeline (e.g., preliminary engineering) under NEPA are eligible for CMAQ support, as are FTA's Alternatives Analyses. General studies that fall outside specific project development do not qualify for CMAQ funding. Examples of such efforts include major investment studies, commuter preference studies, modal market polls or surveys, transit master plans, and others. These activities are eligible for Federal planning funds.

B. Projects Ineligible for CMAQ Funding

The following projects are ineligible for CMAQ funding:

1. Light-duty vehicle scrappage programs.[30]

2. Projects that add new capacity for SOVs are ineligible for CMAQ funding unless construction is limited to high-occupancy vehicle (HOV) lanes.[31] This HOV lane eligibility includes the full range of HOV facility uses authorized under 23 U.S.C. 166, such as high-occupancy toll (HOT) and low-emission vehicles.

3. Routine maintenance and rehabilitation projects (e.g., replacement-in-kind of track or other equipment, reconstruction of bridges, stations, and other facilities, and

[25] 23 U.S.C. 149(b).

[26] 23 U.S.C. 149(b) (SAFETEA–LU § 1808(a)).

[27] 40 CFR Parts 51 and 93

[28] 23 U.S.C. § 116.

[29] 23 U.S.C. 149(b).

[30] 23 U.S.C. 149(b).

[31] 23 U.S.C. 149(b).

repaving or repairing roads) are ineligible for CMAQ funding as they only maintain existing levels of highway and transit service, and therefore do not reduce emissions.[32] Other funding sources, such as STP and FTA's Section 5307 program, are available for such activities.

4. Administrative costs of the CMAQ program may not be defrayed with program funds, e.g., support for a State's ''CMAQ Project Management Office'' is not eligible.

5. Projects that do not meet the specific eligibility requirements of titles 23 and 49 U.S.C. are ineligible for CMAQ funds.

6. Stand-alone projects to purchase fuel. One exception is listed below in Section VII.D.3.[33]

C. Public-Private Partnerships (PPPs)

In a PPP, a private or non-profit entity's resources replace or supplement State or local funds and possibly a portion of the Federal-aid in a selected project. The PPP elements of the program have been refined over the last two transportation reauthorizations, and these partnerships have become a critical part of CMAQ.[34]

Partnerships should have a legally-binding written agreement in place between the public agency and the private or non-profit entity before a CMAQ-funded project may be implemented. These agreements should be developed under relevant Federal and State law and should specify the intended use for CMAQ funding; the roles and responsibilities of the participating entities; and how the disposition of land, facilities, and equipment will be carried out should the original terms of the agreement be altered (e.g., due to insolvency, change in ownership, or other changes in the structure of the PPP).

Public funds should not be invested where a strong public benefit cannot be demonstrated. Consequently, CMAQ funds should be devoted to PPPs that benefit the general public by clearly reducing emissions, not for financing marginal projects. Consistent with the planning and project selection provisions of the Federal-aid highway program, the FHWA considers it essential that all interested parties have full, open, and timely access to the project selection process.

There are several other statutory restrictions and special provisions on the use of CMAQ funds in PPPs. Eligible costs under this section should not include costs to fund an obligation imposed on private sector or non-profit entities under the CAA or any other Federal law.[35] However, if the private or non-profit entity is clearly exceeding its obligations under Federal law, CMAQ funds may be used for that incremental portion of the project.

Eligible non-monetary activities that satisfy the non-Federal match requirements under the partnership provisions include the following:

- Ownership or operation of land, facilities, or other physical assets
- Construction or project management
- Other forms of participation approved by the U.S. DOT.

Sharing of total project costs, both capital and operating, is a critical element of a successful public-private venture, particularly if the private entity is expected to realize profits as part of the joint venture. State and local officials are urged to consider a full range of cost-sharing options when developing a PPP, including a larger State/local match. For detailed information on cost principles beyond the scope of this guidance, please consult *OMB Circular A–87,* which focuses on determining allowable costs for State, local, and tribal governments; and 49 CFR part 18, which provides direction on administering Federal grants to State and local governments.

D. Eligible Projects and Programs

Eligibility information is provided below. Not all possible requests for CMAQ funding are covered—this section provides examples of activities eligible for CMAQ funds.

1. Transportation Control Measures (TCMs)

Most of the TCMs included in Section 108 of the CAA, listed below, are eligible for CMAQ funding. One CAA TCM, programs to encourage removal of pre-1980 light-duty vehicles, is specifically excluded from CMAQ eligibility.[36]

i. Programs for improved public transit;

ii. Restriction of certain roads or lanes to, or construction of such roads or lanes for use by, passenger buses or HOV;

iii. Employer-based transportation management plans, including incentives;

iv. Trip-reduction ordinances;

v. Traffic flow improvement programs that reduce emissions;

vi. Fringe and transportation corridor parking facilities serving multiple-occupancy vehicle programs or transit service;

vii. Programs to limit or restrict vehicle use in downtown areas or other areas of emission concentration particularly during periods of peak use;

viii. Programs for the provision of all forms of high-occupancy, shared-ride services;

ix. Programs to limit portions of road surfaces or certain sections of the metropolitan area to the use of non-motorized vehicles or pedestrian use, both as to time and place;

x. Programs for secure bicycle storage facilities and other facilities, including bicycle lanes, for the convenience and protection of bicyclists, in both public and private areas;

xi. Programs to control extended idling of vehicles;

xii. Reducing emissions from extreme cold-start conditions;

xiii. Employer-sponsored programs to permit flexible work schedules;

xiv. Programs and ordinances to facilitate non-automobile travel, provision and utilization of mass transit, and to generally reduce the need for SOV travel, as part of transportation planning and development efforts of a locality, including programs and ordinances applicable to new shopping centers, special events, and other centers of vehicle activity; and

xv. Programs for new construction and major reconstructions of paths, tracks, or areas solely for the use by pedestrian or other non-motorized means of transportation when economically feasible and in the public interest.

2. Extreme Low-Temperature Cold Start Programs

Projects intended to reduce emissions from extreme cold-start conditions are eligible for CMAQ funding. Such projects include retrofitting vehicles and fleets with water and oil heaters and installing electrical outlets and equipment in publicly-owned garages or fleet storage facilities (See Section VII.C. for a possible expansion to privately-owned equipment and facilities).

3. Alternative Fuels and Vehicles

Fuel

With the exception of Missouri, Iowa, Minnesota, Wisconsin, Illinois, Indiana, and Ohio, fuel costs are not an eligible expense as a stand-alone project.[37] Only these seven States may use CMAQ funds to purchase the alternative fuels defined in section 301 of the 1992 Energy Policy Act (natural gas, ethanol, etc.) or biodiesel, assuming such projects meet

[32] 23 U.S.C. 116.

[33] 23 U.S.C. 149(k).

[34] 23 U.S.C. 149(e).

[35] 23 U.S.C. 149(e)(5).

[36] 23 U.S.C. 149(b)(1)(A)(i).

[37] SAFETEA–LU, § 1808(k).

other applicable eligibility requirements noted in Section VII.B. above.

Establishing publicly-owned fueling facilities and other infrastructure needed to fuel alternative-fuel vehicles is an eligible expense, unless privately-owned fueling stations are in place and reasonably accessible. Additionally, CMAQ funds may support converting a private fueling facility to support alternative fuels through a public-private partnership agreement (See Section VII.C.).

Non-Transit Vehicles

CMAQ funds may be used to purchase publicly-owned alternative fuel vehicles, including passenger vehicles, refuse trucks, street cleaners, and others. Costs associated with converting fleets to run on alternative fuels are also eligible. When private vehicles are purchased, only the cost difference between the alternative fuel vehicles and comparable conventional fuel vehicles is eligible. Such vehicles should be fueled by one of the alternative fuels identified in section 301 of the 1992 Energy Policy Act or biodiesel. Eligible projects also include alternatives to diesel engines and vehicles.

Hybrid Vehicles

Although not defined by the Energy Policy Act of 1992 as alternative fuel vehicles, certain hybrid vehicles that have lower emissions rates than their non-hybrid counterparts may be eligible for CMAQ investment. Hybrid passenger vehicles must meet EPA's low emissions and energy efficiency requirements for certification under the HOV exception provisions of the SAFETEA–LU to be eligible for CMAQ funding.[38]

Projects involving heavier vehicles, including refuse haulers and delivery trucks, also may be appropriate for program support. Eligibility should be based on a comparison of the emissions projections of these larger candidate vehicles and other comparable models.

4. Congestion Reduction & Traffic Flow Improvements

Traffic flow improvements may include the following:

a. Traditional Improvements

Traditional traffic flow improvements, such as the construction of roundabouts, HOV lanes, left-turn or other managed lanes, are eligible for CMAQ funding provided they demonstrate net emissions benefits.

b. Intelligent Transportation Systems

Intelligent Transportation Systems (ITS) projects, such as traffic signal synchronization projects, traffic management projects, and traveler information systems, can be effective in relieving traffic congestion, enhancing transit bus performance, and improving air quality. The following have the greatest potential for improving air quality:

- Regional multi-modal traveler information systems.
- Traffic signal control systems.
- Freeway management systems.
- Electronic toll-collection systems.
- Transit management systems.
- Incident management programs.

A lengthier discussion of the benefits associated with various operational improvements can be found at: *http://ops.fhwa.dot.gov/program_areas/programareas.htm*.

c. Value/Congestion Pricing

As part of its Congestion Initiative referenced above, the Department broadly promotes highway congestion pricing and is also seeking an area-wide demonstration of the effectiveness of congestion pricing (along with other elements). Congestion pricing is a market-based mechanism that allows tolls to rise and fall depending on available capacity and demand. It has gained increasing attention and popularity in recent years following several highly successful facility demonstrations in the U.S. and several network wide demonstrations abroad. Tolls can be charged electronically, thereby eliminating the need for tollbooths. In addition to the benefits associated with reducing congestion, revenue is generated that can be used to pay for a wide range of transportation improvements, including Title 23—eligible transit services in the newly tolled corridor.

Parking pricing can include time-of-day parking charges that reflect congested conditions. These strategies should be designed to influence trip-making behavior and may include charges for using a parking facility at peak periods, or a range of employer-based parking cash-out policies that provide financial incentives to avoid parking or driving alone. Parking pricing integrated with other pricing strategies is encouraged.

Pricing encompasses a variety of market-based approaches such as:

- HOT lanes, or High Occupancy Toll lanes, on which variable tolls are charged to drivers of low-occupancy vehicles using HOV lanes, such as the ''FasTrak'' Lanes on I–15 in San Diego and the recently converted I–394 in Minneapolis in which prices vary dynamically every two minutes based on traffic conditions
- New variably tolled express lanes on existing toll-free facilities, such as the ''91 Express Lanes'' on State Route 91 in Orange County, CA
- Variable tolls on existing or new toll roads, such as on the bridges and tunnels operated by the Port Authority of New York and New Jersey
- Network-wide or cordon pricing, such as implemented in Stockholm, London and Singapore
- Usage-based vehicle pricing, such as mileage-based vehicle taxation being explored by the State of Oregon, or pay-per-mile car insurance

As with any eligible CMAQ project, value pricing should generate an emissions reduction. Marketing and outreach efforts to expand and encourage the use of eligible pricing measures may be funded indefinitely. Eligible expenses for reimbursement include, but are not limited to: Tolling infrastructure, such as transponders and other electronic toll or fare payment systems; small roadway modifications to enable tolling, marketing, public outreach, and support services, such as transit in a newly tolled corridor. Innovative pricing approaches yet to be deployed in the U.S. also may be supported through the *Value Pricing Pilot Program*. A more complete discussion of projects currently underway in the U.S. can be found at: *http://ops.fhwa.dot.gov/tolling_pricing/value_pricing/index.htm*.

Operating expenses for traffic flow improvements are eligible for CMAQ funding for three years if they can be shown to produce air quality benefits, if the expenses are incurred from new or additional services, and if previous funding mechanisms, such as fares or fees for services, are not displaced.

Projects or programs that involve the purchase of integrated, interoperable emergency communications equipment are eligible for CMAQ funding.[39]

5. Transit Improvements

Many transit projects are eligible for CMAQ funds. The general guideline for determining eligibility is whether the project increases capacity and would likely result in an increase in transit ridership and a potential reduction in congestion. As with other types of CMAQ projects, there should be a quantified estimate of the project's

[38] 23 U.S.C. 166(e) (SAFETEA–LU § 1121(a)). The required rulemaking developed by EPA has been published in the **Federal Register** at 72 FR 29102, *http://www.epa.gov/fedrgstr/EPA-AIR/2007/May/Day-24/a9821.htm*.

[39] 23 U.S.C. 149(b)(6) (SAFETEA–LU § 1808(b)(4)).

emissions benefits accompanying the proposal.

The FTA administers most transit projects. Once the FTA determines a project eligible, CMAQ funds will be transferred from the FHWA to the FTA, and the project will be administered according to the requirements of the FTA's Urbanized Area Formula Grant Program.[40] Certain types of transit projects for which the FTA lacks statutory authority, such as diesel retrofit equipment for public school bus fleets, are administered by the FHWA.

a. Facilities

New transit facilities (e.g., lines, stations, terminals, transfer facilities) are eligible if they are associated with new or enhanced mass transit service. Routine maintenance or rehabilitation of existing facilities is not eligible, as it does not reduce emissions. However, rehabilitation of a facility may be eligible if the vast majority of the project involves physical improvements that will increase capacity. In such cases there should be supporting documentation showing an increase in transit ridership that is more than minimal. If the vast majority of the project involves capacity enhancements, other elements involving refurbishment and replacement-in-kind also are eligible.

b. Vehicles and Equipment

New transit vehicles (bus, rail, or van) to expand the fleet or replace existing vehicles are eligible. Transit agencies are encouraged to purchase vehicles that are most cost-effective in reducing emissions. Diesel engine retrofits, such as replacement engines and exhaust after-treatment devices, are eligible if certified or verified by the EPA or California Air Resources Board (CARB). Routine preventive maintenance for vehicles is not eligible as it only returns the vehicles to baseline conditions. Besides diesel engine retrofits, other transit equipment may be eligible if it represents a major system-wide upgrade that will significantly improve speed or reliability of transit service, such as advanced signal and communications systems.

c. Fuel

Fuel, whether conventional or alternative fuel, is an eligible expense only as part of a project providing operating assistance for new or expanded transit service under the CMAQ program. This includes fuels and fuel additives considered diesel retrofit technologies by the EPA or CARB. See Section VII.D.3 for statutory exceptions for certain states regarding the purchase of alternative fuel with CMAQ funds.

d. Operating Assistance

Operating assistance to introduce new transit service or expand existing service is eligible. It may be a new type of service, service to a new geographic area, or an expansion of existing service providing additional hours of service or reduced headways. For a service expansion, only the operating costs of the new increment of service are eligible. Eligible operating costs include labor, fuel, maintenance, and related expenses. Operating assistance may be CMAQ-funded for a maximum of three years. The intent is to support the demonstration of new services that may prove successful enough to sustain with other funding sources, and to free up CMAQ funds to generate new air quality benefits.

e. Transit Fare Subsidies

CMAQ funds may be used to subsidize regular transit fares in an effort to prevent the NAAQS from being exceeded, but only under the following conditions: The reduced or free fare should be part of a comprehensive area-wide program to prevent the NAAQS from being exceeded. ''Ozone Action'' programs vary in scope around the country, but they generally include actions that individuals and employers can take and they are aimed at all major sources of air pollution, not just transportation. The subsidized fare should be available to the general public and may not be limited to specific groups. It may only be offered during periods of elevated pollution when the threat of exceeding the NAAQS is greatest; it is not intended for the entire high-ozone season. Finally, the fare subsidy proposal should demonstrate that the responsible local agencies will combine the reduced or free fare with a robust marketing program to inform SOV drivers of other transportation options. Because the fare subsidy is not strictly a form of operating assistance, it would not be subject to the three-year limit.

6. Bicycle and Pedestrian Facilities and Programs

Bicycle and pedestrian facilities and programs are included as a TCM in section 108(f)(1)(A) of the CAA. The following are eligible projects:

- Constructing bicycle and pedestrian facilities (paths, bike racks, support facilities, etc.) that are not exclusively recreational and reduce vehicle trips;
- Non-construction outreach related to safe bicycle use;
- Establishing and funding State bicycle/pedestrian coordinator positions for promoting and facilitating nonmotorized transportation modes through public education, safety programs, etc. (Limited to one full-time position per State)[41]

7. Travel Demand Management

Travel demand management (TDM) encompasses a diverse set of activities that focuses on physical assets and services that provide real-time information on network performance and support better decision-making for travelers choosing modes, times, routes, and locations. Such projects can help ease congestion and reduce SOV use—contributing to mobility, while enhancing air quality and saving energy resources. Similar to ITS and Value Pricing, today's TDM programs seek to optimize the performance of local and regional transportation networks. The following activities are eligible if they are explicitly aimed at reducing SOV travel and associated emissions:

- Fringe parking.
- Traveler information services.
- Shuttle services.
- Guaranteed ride home programs.
- Market research and planning in support of TDM implementation.
- Carpools, vanpools (see item 10 below).
- Traffic calming measures.
- Parking pricing.
- Variable road pricing.
- Telecommuting.
- Employer-based commuter choice programs.

CMAQ funds may support capital expenses and up to three years of operating assistance to administer and manage new or expanded TDM programs.

Marketing and outreach efforts to expand use of TDM measures may be funded indefinitely, but only if they are broken out as distinct line items (see Section VII.D.8. below).

Eligible telecommuting activities include planning, preparing technical and feasibility studies, and training. Construction of telecommuting centers and computer and office equipment purchases should not be supported with CMAQ funds.

8. Public Education and Outreach Activities

The goal of CMAQ-funded public education and outreach activities is to educate the public, community leaders, and potential project sponsors about connections among trip making and transportation mode choices, traffic

[40] 49 U.S.C. 5307.

[41] 23 U.S.C. 217(d).

congestion, and air quality. Public education and outreach can help communities reduce emissions and congestion by inducing drivers to change their transportation choices. More important, an informed public is likely to support larger regional measures necessary to reduce congestion and meet CAA requirements.

A wide range of public education and outreach activities is eligible for CMAQ funding, including activities that promote new or existing transportation services, developing messages and advertising materials (including market research, focus groups, and creative), placing messages and materials, evaluating message and material dissemination and public awareness, technical assistance, programs that promote the Tax Code provision related to commute benefits,[42] transit ''store'' operations, and any other activities that help forward less-polluting transportation options.

Using CMAQ funds, communities have disseminated many transportation and air quality public education messages, including maintain your vehicle; curb SOV travel by trip chaining, telecommuting and using alternate modes; fuel properly; observe speed limits; don't idle your vehicle for long durations; eliminate ''jack-rabbit'' starts and stops, and others.

The *It All Adds Up to Cleaner Air* public education messages and materials (regarding vehicle maintenance, proper fueling, trip chaining, and alternate modes) have been successful in raising awareness, garnering funds and in-kind support, and building coalitions of diverse groups across the country. These commercial-quality materials, which were developed in response to requests by State and local transportation and air agencies, are free and communities are encouraged to use and build on them. More information is available at *http://www.italladdsup.gov/.*

Long-term public education and outreach can be effective in raising awareness that can lead to changes in travel behavior and ongoing emissions reductions; therefore, these activities may be funded indefinitely.

9. Transportation Management Associations

Transportation Management Associations (TMAs) are groups of citizens, firms, or employers that organize to address the transportation issues in their immediate locale by promoting rideshare programs, transit, shuttles, or other measures. TMAs can play a useful role in brokering transportation services to private employers.

CMAQ funds may be used to establish TMAs provided that they reduce emissions. Eligible expenses include TMA start-up costs and up to three years of operating assistance. Eligibility of specific TMA activities is addressed throughout this guidance.

10. Carpooling and Vanpooling

Eligible activities can be divided into two types of costs: *Marketing* (which applies to both carpools and vanpools) and *vehicle* (which applies to vanpools only). a. Carpool/vanpool marketing covers existing, expanded, and new activities designed to increase the use of carpools and vanpools, and includes purchase and use of computerized matching software and outreach to employers. Guaranteed ride home programs are also considered marketing tools. Marketing costs may be funded indefinitely. b. Vanpool vehicle capital costs include purchasing or leasing vans for use in vanpools. Eligible operating costs, limited to three years, include empty-seat subsidies, maintenance, insurance, administration, and other related expenses.

CMAQ funds should not be used to buy or lease vans that would directly compete with or impede private sector initiatives. States and MPOs should consult with the private sector prior to using CMAQ funds to purchase vans, and if private firms have definite plans to provide adequate vanpool service, CMAQ funds should not be used to supplant that service.

Carpooling and vanpooling activities may be funded with up to 100% federal funding, with certain limitations.[43]

11. Freight/Intermodal

Projects and programs targeting freight capital costs—rolling stock or ground infrastructure—are eligible provided that air quality benefits can be demonstrated.[44] Freight projects that reduce emissions fall generally into two categories: Primary efforts that target emissions directly or secondary projects that reduce net emissions.

Successful primary projects could include new diesel engine technology or retrofits of vehicles or engines. Eligibility is not confined to highway projects, but also applies to nonroad mobile freight projects, such as rail.[45] See Section VII.D.12. below on diesel retrofit technology—examples of primary freight projects—and for information on EPA's guidance and model rule for emissions reduction credit in the SIP and conformity processes.

Secondary projects reduce emissions through shifts in or additions to infrastructure. Support for an intermodal container transfer facility may be eligible if the project demonstrates reduced diesel engine emissions when balancing the drop in truck VMT against the increase in locomotive or other non-highway activity. Intermodal facilities, such as inland transshipment ports or near/on-dock rail, may generate substantial emissions reductions through the decrease in miles traveled for pre-1986 heavy-duty diesel trucks. This secondary, indirect effect on truck traffic and the ensuing drop in diesel emissions help demonstrate eligibility.

The transportation function of these freight/intermodal projects should be emphasized. Marginal projects that support freight operations in a very tangential manner are not eligible for CMAQ funding. Warehouse handling equipment, for example, is not an eligible investment of program funds. However, equipment that provides a transportation function or directly supports this function is eligible, such as railyard switch locomotives or shunters.

12. Diesel Engine Retrofits & Other Advanced Truck Technologies

The SAFETEA–LU places a new emphasis on diesel engine retrofits and the various types of projects that fall under this broad category.[46] These efforts are defined as vehicle replacement, repowering (replacing an engine with a cleaner diesel engine, alternative fuels, etc.), rebuilding an engine, or other technologies determined by the EPA as appropriate for reducing emissions from diesel engines.[47] This latter point, highlighting developing technologies, establishes a degree of flexibility and a need for periodic adjustment in the definition by the EPA. The legislation defines retrofit projects as applicable to both on-road motor vehicles and nonroad

[42] Section 132(f) of the Internal Revenue Code allows employers to pay their employees, as of November 5, 2007, up to $115 per month for transit and vanpool expenses and up to $215 per month for qualified parking. 26 U.S.C. 132(f). Each of these benefits is subject to annual increases based on changes to the Consumer Price Index. 26 U.S.C. 1(f)(3). Alternately, employers may allow employees to use their pre-tax income to purchase these commuter benefits. Employers may also provide a combination of these employer-paid and employee paid tax-free benefits. For more information, please visit *http://www.commuterchoice.com/.*

[43] 23 U.S.C. 120(c).

[44] 23 U.S.C. 149(b)(3).

[45] 23 U.S.C. 149(b)(3).

[46] 23 U.S.C. 149(f)(3) (SAFETEA–LU § 1808(d)).

[47] 23 U.S.C. 149(f)(2) (SAFETEA–LU § 1808(d)).

construction equipment; the latter must be used in Title 23 projects based in nonattainment or maintenance areas for either PM or ozone.[48]

There are a number of project types in the diesel retrofit area for which CMAQ funds are eligible. Assuming all other CMAQ criteria are met, eligible projects include diesel engine replacement; full engine rebuilding and reconditioning; and purchase and installation of after-treatment hardware, including particulate matter traps and oxidation catalysts, and other technologies; and support for heavy-duty vehicle retirement programs. Project agreements involving replacements of either engine or full vehicle should include a provision for disposal of the engine block and a process to verify the retirement of this equipment.[49]

CMAQ funds may be used to purchase and install emission control equipment on school buses. (Such projects, generally, should be administered by FHWA; see VII.D.5, Transit Improvements, above.) In addition, although CMAQ funds should not be used for the initial purchase of airport parking lot shuttles, funds may be used for purchase and installation of after treatment hardware or repowering (with a hybrid drive train, for example).

Refueling is not eligible as a stand-alone project, but is eligible if it is required to support the installation of emissions control equipment, repowering, rebuilding, or other retrofits of non-road engines.[50] For example, ultra-low sulfur diesel (ULSD) may be purchased as part of a project to install diesel particulate filters on nonroad construction equipment because these devices need ULSD to function properly. Costs associated with ULSD are eligible for CMAQ funding only until the standards are effective and the fuel becomes commonly available through the regional supply and logistics chain, effectively rendering ULSD the only remaining diesel fuel distributed. Eligible costs are limited to the difference between standard nonroad diesel fuel and ULSD.

In addition to equipment and technology, outreach activities that provide information exchange and technical assistance to diesel owners and operators on retrofit options are eligible investments. These projects could include the actual education and outreach program, construction or acquisition of appropriate buildings, and other efforts to promote the use of retrofit technologies. Please see Appendix 4 for more detail on diesel retrofits and the various strategies available in this developing air quality field.

The FHWA acknowledges that diesel retrofit projects may include nonroad mobile source endeavors, which traditionally have been outside the Federal-aid process. However, the SAFETEA–LU clarifies CMAQ eligibility for nonroad diesel retrofit projects.[51] Areas that fund these projects are not required to take credit for the projects in the transportation conformity process. For areas that want to take credit, the EPA developed guidance for estimating diesel retrofit emission reductions and for applying the credit in the SIP and transportation conformity processes. The guidance can be found at *http://www.epa.gov/otaq/stateresources/transconf/policy.htm#retrofit.*

In addition to retrofit projects, upgrading long-haul heavy-duty diesel trucks with advanced technologies, such as idle reduction devices, cab and trailer aerodynamic fixtures, and single-wide or other efficient tires, has been demonstrated by the EPA's *Smart Way Transport Partnership Program* to reduce NO_X emissions and save fuel. These strategies also are eligible for CMAQ support. Such projects funded directly by CMAQ that involve the private sector should be part of a Public-Private Partnership, as discussed in Section VII.C.

13. Idle Reduction

Idle reduction projects that reduce emissions and are located within, or in proximity to and primarily benefiting, a nonattainment or maintenance area are eligible for CMAQ investment (The geographic requirement mainly applies to off-board projects, i.e., truck stop electrification (TSE) efforts). However, if CMAQ funding is used for an on-board project (i.e., auxiliary power units, direct fired heaters, etc.) the vehicle—usually a heavy-duty truck—should travel within, or in proximity to and primarily benefiting, a nonattainment or maintenance area.

There have been several instances where operating assistance funds have been requested for TSE services. CMAQ funding to date for TSE projects has been limited to capital costs (i.e. deployment of TSE infrastructure). Operating assistance for TSE projects should not be funded under the CMAQ program because TSE projects generate their own revenue stream and therefore should be able to cover all operating expenses from the accumulated revenue. See Section III.D for information on innovative financing opportunities available for these efforts.

The SAFETEA–LU also permits electrification or other idling reduction facilities and equipment to be constructed or located on rights-of-way of the Interstate system.[52] Prior to the enactment of the SAFETEA–LU, this activity was prohibited.

The EPA issued guidance in January 2004 on methods for calculating emissions reduction credits in SIPs and in the transportation conformity process for long-haul truck idle reduction projects. The guidance can be found at *http://www.epa.gov/smartway/idlingimpacts.htm.*

14. Training

The SAFETEA–LU provides that States and MPOs may use Federal-aid funds to support training and educational development for the transportation workforce.[53] The FHWA encourages State and local officials to weigh the air quality benefits of such training against other cost-effective strategies detailed elsewhere in this guidance before using CMAQ funds for this purpose. Training funded with CMAQ dollars should be directly related to implementing air quality improvements and be approved in advance by the FHWA Division office.

15. Inspection/Maintenance (I/M) Programs

Funds under the CMAQ program may be used to establish either publicly or privately owned I/M facilities. Eligible activities include construction of facilities, purchase of equipment, I/M program development, and one-time start-up activities, such as updating quality assurance software or developing a mechanic training curriculum. The I/M program must constitute new or additional efforts,[54] existing funding (including inspection fees) should not be displaced, and operating expenses are eligible for three years.

Privately Owned I/M Facilities

In States that rely on privately owned I/M facilities, State or local I/M program-related administrative costs may be funded under the CMAQ program as in States that use public I/M facilities. However, CMAQ support to establish I/M facilities at privately owned stations, such as service stations

[48] 23 U.S.C. 149(b)(7) (SAFETEA–LU § 1808(b)).

[49] Reimbursement of costs for full-vehicle replacement may be limited to those elements that lead to emission reductions.

[50] 23 U.S.C. 149(f) (SAFETEA–LU § 1808(d)).

[51] 23 U.S.C. 149(b)(7) (SAFETEA–LU § 1808(b)).

[52] 23 U.S.C. 111(d) (SAFETEA–LU § 1412).

[53] 23 U.S.C. 504(e) (SAFETEA–LU § 5204(e)).

[54] 23 U.S.C. 149(b).

that own the equipment and conduct emission test-and-repair services, requires a public-private partnership (See Section VII.C.).

The establishment of ''portable'' I/M programs, including remote sensing, is also eligible under the CMAQ program, provided that they are public services, reduce emissions, and do not conflict with statutory I/M requirements or EPA regulations.

16. Experimental Pilot Projects

State and local organizations have experimented with various types of transportation services to better meet the travel needs of their constituents. These ''experimental'' projects may show promise in reducing emissions, but do not yet have supporting data. The FHWA has supported and funded some of these projects as demonstrations to determine their benefits and costs. These experimental pilots are not intended to bypass the definition of basic project eligibility but seek to better define the projects' future role in strategies to reduce emissions.

For a project or program to qualify as an experimental pilot, it should be defined as a transportation project and be expected to reduce emissions by decreasing vehicle miles traveled (VMT), fuel consumption, congestion, or by other factors. The FHWA encourages States and MPOs to creatively address their air quality problems and to experiment with new services, innovative financing arrangements, public-private partnerships, and complementary approaches that use transportation strategies to reach clean air goals. The CMAQ program may be used to support a well-conceived project even if the proposal may not fully meet the eligibility criteria of this guidance.

Given the untried nature of these pilot projects, before-and-after studies should be completed to determine actual project impacts on air quality as measured by net emissions reduced. These assessments should document the project's immediate impacts in addition to long-term benefits. A schedule for completing the study should be a part of the project agreement. Completed studies should be submitted to the FHWA Division office within three years of implementation of the project or one year after the project's completion, whichever is sooner.

VIII. Project Selection Process—General Conditions

Proposals for CMAQ funding should include a precise description of the project, providing information on its size, scope, location, and timetable. Also, an assessment of the project's expected emission reduction benefits should be completed prior to project selection to better inform the selection of CMAQ projects (See Below).

A. Air Quality Analysis

1. Quantitative Analyses

Quantified emissions benefits (i.e., emissions reductions) and disbenefits (i.e., emissions increases) should be included in all project proposals, except where it is not possible to quantify emissions benefits (see Qualitative Assessment, below). Benefits and disbenefits should be included for all pollutants for which the area is in nonattainment or maintenance status and should include appropriate precursor emissions. Benefits should be listed in a consistent fashion (i.e., kg/day) across projects to allow accurate comparison during the project selection process. Net benefits from all emissions sources involved should be included in the analysis. For example, in analyzing a commuter rail project, net benefits would include emissions reductions from the auto trips avoided, and emissions increases tied to locomotive operation.

State and local transportation and air quality agencies conduct CMAQ-project air quality analyses with different approaches, analytical capabilities, and technical expertise. The SAFETEA–LU encourages State DOTs and MPOs to consult with State and local air quality agencies about the estimated emission reductions from CMAQ proposals.[55] However, while no single method is specified, every effort must be taken to ensure that determinations of air quality benefits are credible and based on a reproducible and logical analytical procedure.[56]

2. Qualitative Assessment

Although quantitative analysis of air quality impacts is expected for almost all project types, an exception will be made when it is not possible to accurately quantify emissions benefits. In these cases, qualitative assessments based on reasoned and logical determinations that the projects or programs will decrease emissions and contribute to attainment or maintenance of a NAAQS are acceptable.

Public education, marketing, and other outreach efforts, which can include advertising alternatives to SOV travel, employer outreach, and public education campaigns, may fall into this category. The primary benefit of these activities is enhanced communication and outreach that is expected to influence travel behavior, and thus air quality.

3. Analyzing Groups of Projects

In some situations, it may be more appropriate to examine the impacts of comprehensive strategies to improve air quality by grouping projects. For example, transit improvements coupled with demand management to reduce SOV use in a corridor might best be analyzed together. Other examples include linked signalization projects, transit improvements, marketing and outreach programs, and ridesharing programs that affect an entire region or corridor.

4. Tradeoffs

As noted above, emissions benefits should be calculated for all pollutants for which an area is in nonattainment or maintenance status. Some potential projects may lead to benefits for one pollutant and increased emissions for another, especially when the balance involves precursors such as NO_X and VOC. States and MPOs should consult with relevant air agencies to weigh the net benefits of the project.

IX. Program Administration

A. Project Selection—MPO and State Responsibilities

CMAQ projects are selected by the State or the MPO. MPOs, State DOTs, and transit agencies should develop CMAQ project selection processes in accordance with the metropolitan and/or statewide planning process. The selection process should involve State and/or local transportation and air quality agencies. This selection process provides an opportunity for States and/or local agencies to present a case for the selection of eligible projects that will best use CMAQ funding to meet the requirements and advance the goals of the Clean Air Act.

The CMAQ project selection process should be transparent, in writing, and publicly available. The process should identify the agencies involved in rating proposed projects, clarify how projects are rated, and name the committee or group responsible for making the final recommendation to the MPO board or other approving body. The selection process should also clearly identify the basis for rating projects, including emissions benefits, cost effectiveness, and any other ancillary selection factors such as congestion relief, greenhouse gas reductions, safety, system preservation, access to opportunity, sustainable development and freight, reduced SOV reliance, multi-modal benefits, and others. At a minimum,

[55] 23 U.S.C. 149(e) (SAFETEA–LU § 1808(e)).

[56] 23 U.S.C. 149(b)(1); (SAFETEA–LU § 1808(b)).

projects should be identified by year and proposed funding source.

Close coordination is encouraged between the State and MPO to ensure that CMAQ funds are used appropriately and to maximize their effectiveness in meeting the CAA requirements. While the program of projects is being developed, the State or MPO should consult with FHWA and FTA to resolve any questions about eligibility. This will ensure that the projects programmed for CMAQ funding in the TIP are all eligible.

States and MPOs should fulfill this responsibility so that nonattainment and maintenance areas are able to make good-faith efforts to attain and maintain the NAAQS by the prescribed deadlines. State DOTs and MPOs should consult with State and local air quality agencies to develop an appropriate project list of CMAQ programming priorities that will have the greatest impact on air quality. In developing this list, MPOs and States should evaluate the cost-effectiveness of the projects and give priority consideration to those that will create the greatest emissions reductions for the least cost. The SAFETEA–LU calls out diesel retrofits as one type of cost-effective project to which priority consideration shall be given. The EPA has conducted a study of the cost-effectiveness of diesel retrofits in reducing PM, NO_X, and VOC emissions.[57] In addition, the National Academy of Science's Transportation Research Board has evaluated the cost-effectiveness of other CMAQ eligible projects, with a focus on NO_X and HC reductions. This study can be found at *http://www.fhwa.dot.gov/environment/cmaqpgs/index.htm.* Information on the cost-effectiveness of CMAQ-eligible projects can be used as a guidepost in evaluating the different types of projects under consideration by an MPO or State. However, cost-effectiveness ultimately will depend on local conditions and project specific factors that affect emission reductions and costs.

B. Federal Agency Responsibilities and Coordination

1. Eligibility Determinations

The FTA determines the eligibility of transit projects, and the FHWA determines the eligibility of all other projects. The FHWA, FTA, and EPA field offices should establish and maintain a consultation and coordination process to review CMAQ funding proposals as needed. While the eligibility determination is not made jointly, every effort should be made to satisfy the concerns raised by the agencies' field offices. The FHWA or FTA field offices may request additional information from the State or MPO to help determine eligibility. The consultation process should provide for timely review and handling of CMAQ funding proposals. The FHWA and FTA headquarters offices are available to consult with their field offices on eligibility determinations.

2. Program Administration

The FHWA Division offices and the FTA Regional offices are responsible for administering the CMAQ program. In general, the FHWA transfers funds to the FTA to administer CMAQ-funded transit projects. In cases where the FTA lacks statutory authority (e.g., school bus fleets), the FHWA will administer the transit project. For projects that involve transit and non-transit elements, such as park-and-ride lots and intermodal passenger projects, the administering agency is decided on a case-by-case basis. All other projects are administered by the FHWA.

3. Tracking Mandatory/Flexible Funds

The FHWA Division office is responsible for tracking obligation of mandatory and flexible CMAQ funds in appropriate areas (See Section V.B.).

C. Annual Reports

States should prepare annual reports detailing how CMAQ funds have been invested. CMAQ reporting is not only useful for the FHWA, the FTA, and the general public, but maintenance of a cumulative database of all CMAQ projects is required by SAFETEA–LU. In addition, the annual reports will be key in developing the CMAQ Evaluation and Assessment, a major research effort designed to gauge the impact of the program, and also required by the statute.[58]

CMAQ annual reports should be submitted through the Web-based CMAQ Tracking System. More information on the CMAQ system is available at: *http://www.fhwa.dot.gov/environment/cmaqpgs/usersguidemail.htm.*

The FHWA Division offices, State DOTs, and MPOs should develop a process for entering and approving the data in a timely manner. This report should be approved by the FHWA Division office by the first day of March following the end of the previous Federal fiscal year (September 30) and cover all CMAQ obligations for that fiscal year. Thus, State DOTs and MPOs should report the data early enough that the Division office has time to review and comment on the report. The report as entered into the CMAQ Tracking System should include:

1. A list of projects funded under CMAQ, in seven main project categories:

- *Transit:* Facilities, vehicles, and equipment, operating assistance for new transit service, etc. Include all transit projects whether administered by the FTA or the FHWA.
- *Shared Ride:* Vanpool and carpool programs and parking for shared-ride services.
- *Traffic Flow Improvements:* Traffic management and control services, signalization projects, ITS projects, intersection improvements, and construction or dedication of HOV lanes.
- *Demand Management:* Trip reduction programs, transportation management plans, flexible work schedule programs, vehicle restriction programs.
- *Pedestrian/Bicycle:* Bikeways, storage facilities, promotional activities.
- *I/M and other TCMs:* Projects not covered by the above categories.
- *STP/CMAQ:* Projects funded with flexible funds.

For reporting purposes, obligations for all CMAQ-eligible phases (beginning with the NEPA process) should be reported for the project they support.

2. The amount of CMAQ funds obligated or deobligated for each project during the Federal fiscal year. Enter deobligations as a negative number. (Do not include Advance Construct funds, as these are not obligations of federal CMAQ funds. Such projects should be reported later when converted to CMAQ funds.)

3. Emissions benefits (and disbenefits) for each project developed from project-level analyses. Report projected emissions benefits expected to occur in the first year that a project is fully operational, in kilograms reduced per day. Benefits should be reported the first time a project is entered into the system, and only then to avoid double counting of benefits. (Because funds may be obligated for a project over several years, an individual CMAQ project may show up in reports for multiple years.) Additionally, address all pollutants for which the area is in nonattainment or maintenance status. Do not enter emissions benefits for deobligations or projects funded with flexible funds (STP/CMAQ).

4. Public-private partnerships and experimental pilot projects should be identified in the system. Transmit electronic versions of completed before-

[57] More information is available at *http://www.epa.gov/cleandiesel/publications.htm.*

[58] 23 U.S.C. 149(h) (SAFETEA–LU § 1808(f)).

and-after studies for experimental pilot projects to the Division offices (*See* Section VII.D.16., Experimental Pilot Projects).

5. Other required information: MPO, nonattainment/maintenance area, project description.

6. Optional information: TIP, State and/or FMIS project numbers—highly recommended. Other optional information includes: Greenhouse gas emission reductions, cost effectiveness, safety, congestion relief, and other ancillary benefits.

Appendix 1: 23 U.S.C. 149

SAFETEA–LU Changes in Underlined Italics

§ 149. Congestion mitigation and air quality improvement program

(a) Establishment.—The Secretary shall establish and implement a congestion mitigation and air quality improvement program in accordance with this section.

(b) Eligible Projects.—Except as provided in subsection (c), a State may obligate funds apportioned to it under section 104 (b)(2) for the congestion mitigation and air quality improvement program only for a transportation project or program if the project or program is for an area in the State that is or was designated as a nonattainment area for ozone, carbon monoxide, or particulate matter under section 107(d) of the Clean Air Act (42 U.S.C. 7407 (d)) and classified pursuant to section 181(a), 186(a), 188(a), or 188(b) of the Clean Air Act (42 U.S.C. 7511 (a), 7512 (a), 7513 (a), or 7513 (b)) or is or was designated as a nonattainment area under such section 107 (d) after December 31, 1997, *or is required to prepare, and file with the Administrator of the Environmental Protection Agency, maintenance plans under the Clean Air Act (42 U.S.C. 7401 et seq.*) and—

(1)(A)(i) if the Secretary, after consultation with the Administrator determines, on the basis of information published by the Environmental Protection Agency pursuant to section 108(f)(1)(A) of the Clean Air Act (other than clause (xvi)) that the project or program is likely to contribute to—

(I) The attainment of a national ambient air quality standard; or

(II) the maintenance of a national ambient air quality standard in a maintenance area; and

(ii) a high level of effectiveness in reducing air pollution, in cases of projects or programs where sufficient information is available in the database established pursuant to subsection (h) to determine the relative effectiveness of such projects or programs; or,

(B) in any case in which such information is not available, if the Secretary, after such consultation, determines that the project or program is part of a program, method, or strategy described in such section 108(f)(1)(A);

(2) if the project or program is included in a State implementation plan that has been approved pursuant to the Clean Air Act and the project will have air quality benefits;

(3) the Secretary, after consultation with the Administrator of the Environmental Protection Agency, determines that the project or program is likely to contribute to the attainment of a national ambient air quality standard, whether through reductions in vehicle miles traveled, fuel consumption, or through other factors;

(4) to establish or operate a traffic monitoring, management, and control facility or program if the Secretary, after consultation with the Administrator of the Environmental Protection Agency, determines that the facility or program, *including advanced truck stop electrification systems,* is likely to contribute to the attainment of a national ambient air quality standard; (removed ''or'')

(5) if the program or project improves traffic flow, including projects to improve signalization, construct high occupancy vehicle lanes, improve intersections, *improve transportation systems management and operations that mitigate congestion and improve air quality,* and implement intelligent transportation system strategies and such other projects that are eligible for assistance under this section on the day before the date of enactment of this paragraph;

(6) if the project or program involves the purchase of integrated, interoperable emergency communications equipment; or

(7) if the project or program is for—

(A) the purchase of diesel retrofits that are—

(i) for motor vehicles (as defined in section 216 of the Clean Air Act (42 U.S.C. 7550)); or

(ii) published in the list under subsection (f)(2) for non-road vehicles and non-road engines (as defined in section 216 of the Clean Air Act (42 U.S.C. 7550)) that are used in construction projects that are—

(I) located in nonattainment or maintenance areas for ozone, PM_{10}, or $PM_{2.5}$ (as defined under the Clean Air Act (42 U.S.C. 7401 et seq.)); and

(II) funded, in whole or in part, under this title; or

(B) the conduct of outreach activities that are designed to provide information and technical assistance to the owners and operators of diesel equipment and vehicles regarding the purchase and installation of diesel retrofits.

No funds may be provided under this section for a project which will result in the construction of new capacity available to single occupant vehicles unless the project consists of a high occupancy vehicle facility available to single occupant vehicles only at other than peak travel times. In areas of a State which are nonattainment for ozone or carbon monoxide, or both, and for PM–10 resulting from transportation activities, the State may obligate such funds for any project or program under paragraph (1) or (2) without regard to any limitation of the Department of Transportation relating to the type of ambient air quality standard such project or program addresses.

(c) States Receiving Minimum Apportionment.—

(1) States without a nonattainment area.—If a State does not have, and never has had, a nonattainment area designated under the Clean Air Act (42 U.S.C. 7401 et seq.), the State may use funds apportioned to the State under section 104 (b)(2) *for any project in the State that—*

(A) would otherwise be eligible under this section as if the project were carried out in a nonattainment or maintenance area; or

(B) is eligible under the surface transportation program under section 133.

(2) States with a nonattainment area.—If a State has a nonattainment area or maintenance area and receives funds under section 104 (b)(2)(D) above the amount of funds that the State would have received based on its nonattainment and maintenance area population under subparagraphs (B) and (C) of section 104 (b)(2), the State may use that portion of the funds not based on its nonattainment and maintenance area population under subparagraphs (B) and (C) of section 104 (b)(2) *for any project in the State that—*

(A) would otherwise be eligible under this section as if the project were carried out in a nonattainment or maintenance area; or

(B) is eligible under the surface transportation program under section 133.

(d) Applicability of Planning Requirements.—Programming and expenditure of funds for projects under this section shall be consistent with the requirements of sections 134 and 135 of this title.

(e) Partnerships With Nongovernmental Entities.—

(1) In general.—Notwithstanding any other provision of this title and in accordance with this subsection, a metropolitan planning organization, State transportation department, or other project sponsor may enter into an agreement with any public, private, or nonprofit entity to cooperatively implement any project carried out under this section.

(2) Forms of participation by entities.—Participation by an entity under paragraph (1) may consist of—

(A) Ownership or operation of any land, facility, vehicle, or other physical asset associated with the project;

(B) cost sharing of any project expense;

(C) carrying out of administration, construction management, project management, project operation, or any other management or operational duty associated with the project; and

(D) any other form of participation approved by the Secretary.

(3) Allocation to entities.—A State may allocate funds apportioned under section 104 (b)(2) to an entity described in paragraph (1).

(4) Alternative fuel projects.—In the case of a project that will provide for the use of alternative fuels by privately owned vehicles or vehicle fleets, activities eligible for funding under this subsection—

(A) May include the costs of vehicle refueling infrastructure, including infrastructure that would support the development, production, and use of emerging technologies that reduce emissions of air pollutants from motor vehicles, and other capital investments associated with the project;

(B) shall include only the incremental cost of an alternative fueled vehicle, as compared to a conventionally fueled vehicle, that would otherwise be borne by a private party; and

(C) shall apply other governmental financial purchase contributions in the calculation of net incremental cost.

(5) Prohibition on federal participation with respect to required activities.—A Federal participation payment under this subsection may not be made to an entity to fund an obligation imposed under the Clean Air Act (42 U.S.C. 7401 *et seq.*) or any other Federal law.

(f) Cost-Effective Emission Reduction Guidance.—

(1) Definitions.—In this subsection, the following definitions apply:

(A) Administrator.—The term 'Administrator' means the Administrator of the Environmental Protection Agency.

(B) Diesel retrofit.—The term 'diesel retrofit' means a replacement, repowering, rebuilding, after treatment, or other technology, as determined by the Administrator.

(2) Emission reduction guidance.—The Administrator, in consultation with the Secretary, shall publish a list of diesel retrofit technologies and supporting technical information for—

(A) Diesel emission reduction technologies certified or verified by the Administrator, the California Air Resources Board, or any other entity recognized by the Administrator for the same purpose;

(B) diesel emission reduction technologies identified by the Administrator as having an application and approvable test plan for verification by the Administrator or the California Air Resources Board that is submitted not later that 18 months of the date of enactment of this subsection;

(C) available information regarding the emission reduction effectiveness and cost effectiveness of technologies identified in this paragraph, taking into consideration air quality and health effects.

(3) Priority.—

(A) In general.—States and metropolitan planning organizations shall give priority in distributing funds received for congestion mitigation and air quality projects and programs from apportionments derived from application of sections 104(b)(2)(B) and 104(b)(2)(C) to—

(i) diesel retrofits, particularly where necessary to facilitate contract compliance, and other cost-effective emission reduction activities, taking into consideration air quality and health effects; and

(ii) cost-effective congestion mitigation activities that provide air quality benefits.

(B) Savings.—This paragraph is not intended to disturb the existing authorities and roles of governmental agencies in making final project selections.

(4) No effect on authority or restrictions.—Nothing in this subsection modifies or otherwise affects any authority or restriction established under the Clean Air Act (42 U.S.C. 7401 et seq.) or any other law (other than provisions of this title relating to congestion mitigation and air quality).

(g) Interagency Consultation.—The Secretary shall encourage States and metropolitan planning organizations to consult with State and local air quality agencies in nonattainment and maintenance areas on the estimated emission reductions from proposed congestion mitigation and air quality improvement programs and projects.

(h) Evaluation and Assessment of Projects.—

(1) In general.—The Secretary, in consultation with the Administrator of the Environmental Protection Agency, shall evaluate and assess a representative sample of projects funded under the congestion mitigation and air quality program to—

(A) determine the direct and indirect impact of the projects on air quality and congestion levels; and

(B) ensure the effective implementation of the program.

(2) Database.—Using appropriate assessments of projects funded under the congestion mitigation and air quality program and results from other research, the Secretary shall maintain and disseminate a cumulative database describing the impacts of the projects.

(3) Consideration.—The Secretary, in consultation with the Administrator, shall consider the recommendations and findings of the report submitted to Congress under section 1110(e) of the Transportation Equity Act for the 21st Century (112 Stat. 144), including recommendations and findings that would improve the operation and evaluation of the congestion mitigation and air quality improvement program.

SAFETEA–LU Section 1808: Additional Provisions

The following provisions were included in the SAFETEA-LU Section 1808. These provisions do not amend 23 U.S.C. and therefore sunset when the SAFETEA-LU expires. To avoid confusion, they are presented here separate from the rest of the statutory text.

(g) Flexibility in the State of Montana.—The State of Montana may use funds apportioned under section 104(b)(2) of title 23, United States Code, for the operation of public transit activities that serve a nonattainment or maintenance area.

(h) Availability of Funds for State of Michigan.—The State of Michigan may use funds apportioned under section 104(b)(2) of such title for the operation and maintenance of intelligent transportation system strategies that serve a nonattainment or maintenance area.

(i) Availability of Funds for the State of Maine.—The State of Maine may use funds apportioned under section 104(b)(2) of such title to support, through September 30, 2009, the operation of passenger rail service between Boston, Massachusetts, and Portland, Maine.

(j) Availability of Funds for Oregon.—The State of Oregon may use funds apportioned on or before September 30, 2009, under section 104(b)(2) of such title to support the operation of additional passenger rail service between Eugene and Portland.

(k) Availability of Funds for Certain Other States.—The States of Missouri, Iowa, Minnesota, Wisconsin, Illinois, Indiana, and Ohio may use funds apportioned under section 104(b)(2) of such title to purchase alternative fuel (as defined in section 301 of the Energy Policy Act of 1992 (42 U.S.C. 13211)) or biodiesel.

Appendix 2: 23 U.S.C. 104(b)(2) Apportionment

(2) Congestion mitigation and air quality improvement program.—

(A) In general.—For the congestion mitigation and air quality improvement program, in the ratio that—

(i) the total of all weighted nonattainment and maintenance area populations in each State; bears to

(ii) the total of all weighted nonattainment and maintenance area populations in all States.

(B) Calculation of weighted nonattainment and maintenance area population.-Subject to subparagraph (C), for the purpose of subparagraph (A), the weighted nonattainment and maintenance area population shall be calculated by multiplying the population of each area in a State that was a nonattainment area or maintenance area as described in section 149(b) for ozone or carbon monoxide by a factor of—

(i) 1.0 if, at the time of apportionment, the area is a maintenance area;

(ii) 1.0 if, at the time of the apportionment, the area is classified as a marginal ozone nonattainment area under subpart 2 of part D of title I of the Clean Air Act (42 U.S.C. 7511 et seq.);

(iii) 1.1 if, at the time of the apportionment, the area is classified as a moderate ozone nonattainment area under such subpart;

(iv) 1.2 if, at the time of the apportionment, the area is classified as a serious ozone nonattainment area under such subpart;

(v) 1.3 if, at the time of the apportionment, the area is classified as a severe ozone nonattainment area under such subpart;

(vi) 1.4 if, at the time of the apportionment, the area is classified as an extreme ozone nonattainment area under such subpart;

(vii) 1.0 if, at the time of the apportionment, the area is not a nonattainment or maintenance area as described in section 149(b) for ozone, but is classified under subpart 3 of part D of title I of such Act (42 U.S.C. 7512 et seq.) as a nonattainment area described in section 149(b) for carbon monoxide; *or*

(viii) 1.0 if, at the time of apportionment, an area is designated as nonattainment for ozone under subpart 1 of part D of title I of such Act (42 U.S.C. 7512 et seq.).

(C) Additional Adjustment for Carbon Monoxide Areas.—If, in addition to being designated as a nonattainment or maintenance are for ozone as described in section 149(b), any county within the area was also classified under subpart 3 of part D of title I of the Clean Air Act (42 U.S.C. 7512 et seq.) as a nonattainment or maintenance area described in section 149(b) for carbon monoxide, the weighted nonattainment or maintenance area population of the county, as determined under clauses (i) through (vi) or clause (viii) of subparagraph (B), shall be further multiplied by a factor of 1.2.

(D) Minimum apportionment.—Notwithstanding any other provision of this paragraph, each State shall receive a minimum of ½ of 1 percent of the funds apportioned under this paragraph.

(E) Determinations of population.—In determining population figures for the

purposes of this paragraph, the Secretary shall use the latest available annual estimates prepared by the Secretary of Commerce.

Appendix 3: Considerations for Diesel Retrofit Projects

The term diesel retrofit includes any technology or system that achieves emission reductions beyond that required by the EPA regulations at the time of engine certification. Assuming all other criteria are met, eligible diesel retrofit projects include the replacement of high-emitting vehicles/equipment with cleaner vehicles/equipment (including hybrid or alternative fuel models), repowering or engine replacement, rebuilding the engine to a cleaner standard, the purchase and installation of advanced emissions control technologies (such as particulate matter traps or oxidation catalysts) or the use of a cleaner fuel to support eligible nonroad devices. The legislation defines retrofit projects as applicable to both on-road motor vehicles and nonroad construction equipment. Retrofit strategies include:

Emissions Control Technologies

The EPA and the California Air Resources Board (CARB) have retrofit technology verification programs that evaluate the performance of advanced emissions control technologies and engine rebuild kits. CMAQ-funded diesel retrofit projects must use retrofit technologies that are verified under the EPA's Voluntary Diesel Retrofit Program or CARB.[59] A list of EPA-verified technologies is available at *http://www.epa.gov/otaq/retrofit/retroverifiedlist.htm.* CARB's verification program can be found at *http://www.arb.ca.gov/diesel/verdev/home/home.htm.* In addition, for more detailed information on the cost-effectiveness of various diesel retrofit technologies, the EPA's study, ''*The Cost-Effectiveness of Heavy-Duty Diesel Retrofits and Other Mobile Source Emission Reduction Projects and Programs*'' can be found at: *http://www.epa.gov/cleandiesel/publications.htm.*

Refueling

Refueling is eligible when combined with an overall diesel retrofit project for which the cleaner fuel is required. For example, ultra-low sulfur diesel (ULSD) may be purchased as part of a project to install diesel particulate filters on highway construction equipment only because these devices require ULSD to function properly.

Fuel-related technologies identified in EPA's list of retrofit strategies are eligible only until standards for such clean fuel are effective. For example, ULSD is eligible for CMAQ only until the standard is effective. For on-road use, ULSD is mandated for use in October 2006. According to EPA's regulatory development calendar, low sulfur diesel (500 ppm of sulfur) will be required for nonroad use in 2007, while ULSD (15 ppm of sulfur) will be required for nonroad use in 2010.

Vehicle/Equipment Replacement Projects

Replacement projects occur when older vehicles/equipment are replaced with cleaner vehicles/equipment before they would have been removed through normal fleet turnover or attrition. The vehicle or equipment being replaced should be scrapped or the engine remanufactured to a cleaner standard. For areas that want to take credit in the SIP and transportation conformity processes for these projects, see the EPA's retrofit guidance at: *http://www.epa.gov/otaq/stateresources/transconf/policy.htm#retrofit.*

Generally, the replacement vehicle or equipment would perform the same function as the vehicle or equipment that is being replaced (e.g., an excavator used to dig pipelines or utility trenches would be replaced by an excavator that continues these duties).

In addition, the vehicle or equipment being replaced would be in good working order and able to perform the duties of the new vehicle or equipment. Removing vehicles that no longer function or are at the end or their useful life will not lead to an emissions reduction.

Repower or Engine Replacement Projects

Engine replacement projects involve the replacement of an older, higher emitting engine with a newer, cleaner engine. Engine replacements can also be combined with emission control technologies. The engines being replaced should be scrapped or remanufactured to a cleaner standard. As noted above, for areas that want to take credit in the SIP and transportation conformity processes for these projects, see EPA's retrofit guidance at: *http://www.epa.gov/otaq/stateresources/transconf/policy.htm#retrofit.*

New engines also must be EPA-certified.[60] For a complete list of all EPA certified large highway and nonroad engines, please consult the list at *http://www.epa.gov/otaq/certdata.htm.*

For more information on diesel retrofits, please see the EPA's National Clean Diesel Campaign Web site at *http://www.epa.gov/cleandiesel/.*

[FR Doc. E8–24704 Filed 10–17–08; 8:45 am]

BILLING CODE 4910–22–P

[59] 23 U.S.C. 149(b)(7) (SAFETEA–LU § 1808(b)).

[60] 23 U.S.C. 149(b)(7) (SAFETEA–LU § 1808(b)).

DEPARTMENT OF TRANSPORTATION

Maritime Administration

Reports, Forms and Recordkeeping Requirements; Agency Information Collection Activity Under OMB Review

AGENCY: Maritime Administration, DOT.

ACTION: Notice and request for comments.

SUMMARY: In compliance with the Paperwork Reduction Act of 1995 (44 U.S.C. 3501 *et seq.*), this notice announces that the Information Collection abstracted below has been forwarded to the Office of Management and Budget (OMB) for review and approval. The nature of the information collection is described as well as its expected burden. The **Federal Register** Notice with a 60-day comment period soliciting comments on the following collection of information was published on August 8, 2008, and comments were due by October 7, 2008.

No comments were received.

DATES: Comments should be submitted on or before November 19, 2008.

FOR FURTHER INFORMATION CONTACT: Thomas Harrelson, Maritime Administration, 1200 New Jersey Avenue, SE., Washington, DC 20590. Telephone: 202–366–5515; or E-Mail: *tom.harrelson@dot.gov.* Copies of this collection also can be obtained from that office.

SUPPLEMENTARY INFORMATION: Maritime Administration (MARAD).

Title: Monthly Report of Ocean Shipments Moving under Export-Import Bank Financing.

OMB Control Number: 2133–0013.

Type of Request: Extension of currently approved collection.

Affected Public: Shippers subject to Export/Import Bank financing.

Form Numbers: MA–518.

Abstract: 46 U.S.C. 55304, requires MARAD to monitor and enforce the U.S.-flag shipping requirements relative to the loans/guarantees extended by the Export-Import Bank (EXIMBANK) to foreign borrowers. Public Resolution 17 requires that shipments financed by EXIMBANK and that move by sea, must be transported exclusively on U.S.-flag registered vessels unless a waiver is obtained from MARAD.

Annual Estimated Burden Hours: 169 hours.

Addresses: Send comments to the Office of Information and Regulatory Affairs, Office of Management and Budget, 725 17th Street, NW., Washington, DC 20503, Attention MARAD Desk Officer.

Comments Are Invited on: (a) Whether the proposed collection of information is necessary for the proper performance of the functions of the agency, including whether the information will have practical utility; (b) the accuracy of the agency's estimate of the burden of the proposed information collection; (c) ways to enhance the quality, utility and clarity of the information to be collected; and (d) ways to minimize the burden of the collection of information on respondents, including the use of automated collection techniques or other forms of information technology. A comment to OMB is best assured of having its full effect if OMB receives it within 30 days of publication.

(Authority: 49 CFR 1.66.)

Issued in Washington, DC on October 14, 2008.

Leonard Sutter,

Secretary, Maritime Administration.

[FR Doc. E8–24909 Filed 10–17–08; 8:45 am]

BILLING CODE 4910–81–P

DEPARTMENT OF TRANSPORTATION

Surface Transportation Board

[STB Ex Parte No. 670 (Sub-No. 1)]

Notice of Rail Energy Transportation Advisory Committee Meeting

AGENCY: Surface Transportation Board.

ACTION: Notice of Rail Energy Transportation Advisory Committee meeting.

SUMMARY: Notice is hereby given of a meeting of the Rail Energy Transportation Advisory Committee (RETAC), pursuant to section 10(a)(2) of the Federal Advisory Committee Act, Public Law No. 92–463, as amended (5 U.S.C., App. 2).

DATES: The meeting will be held on Tuesday, December 2, 2008, beginning at 9 a.m., E.S.T.

ADDRESSES: The meeting will be held in the Hearing Room on the first floor of the Surface Transportation Board's headquarters at Patriot's Plaza, 395 E Street, SW., Washington, DC 20423–0001.

FOR FURTHER INFORMATION CONTACT: Scott M. Zimmerman (202) 245–0202. [Assistance for the hearing impaired is available through the Federal Information Relay Service (FIRS) at: (800) 877–8339].

SUPPLEMENTARY INFORMATION: RETAC arose from a proceeding instituted by the Board, in *Establishment of a Rail Energy Transportation Advisory Committee*, STB Ex Parte No. 670. RETAC was formed to provide advice and guidance to the Board, and to serve as a forum for discussion of emerging issues regarding the transportation by rail of energy resources, particularly, but not necessarily limited to, coal, ethanol, and other biofuels. The purpose of this meeting is to continue discussions regarding issues such as rail performance, capacity constraints, infrastructure planning and development, and effective coordination among suppliers, carriers, and users of energy resources.

The meeting, which is open to the public, will be conducted pursuant to RETAC's charter and Board procedures. Further communications about this meeting may be announced through the Board's Web site at *http://www.stb.dot.gov*.

This action will not significantly affect either the quality of the human environment or the conservation of energy resources.

Decided: October 14, 2008.

By the Board, Anne K. Quinlan, Acting Secretary.

Anne K. Quinlan,

Acting Secretary.

[FR Doc. E8–24840 Filed 10–17–08; 8:45 am]

BILLING CODE 4915–01–P

DEPARTMENT OF THE TREASURY

Office of Thrift Supervision

Management Official Interlocks

AGENCY: Office of Thrift Supervision (OTS), Treasury.

ACTION: Notice and request for comment.

SUMMARY: The proposed information collection request (ICR) described below has been submitted to the Office of Management and Budget (OMB) for review and approval, as required by the Paperwork Reduction Act of 1995. OTS is soliciting public comments on the proposal.

DATES: Submit written comments on or before November 19, 2008. A copy of this ICR, with applicable supporting documentation, can be obtained from RegInfo.gov at *http://www.reginfo.gov/public/do/PRAMain.*

ADDRESSES: Send comments, referring to the collection by title of the proposal or by OMB approval number, to OMB and OTS at these addresses: Office of Information and Regulatory Affairs, Attention: Desk Officer for OTS, U.S. Office of Management and Budget, 725 17th Street, NW., Room 10235, Washington, DC 20503, or by fax to (202) 395–6974; and Information Collection Comments, Chief Counsel's Office, Office of Thrift Supervision, 1700 G Street, NW., Washington, DC 20552, by fax to (202) 906–6518, or by e-mail to *infocollection.comments@ots.treas.gov.* OTS will post comments and the related index on the OTS Internet Site at *http://www.ots.treas.gov.* In addition, interested persons may inspect comments at the Public Reading Room, 1700 G Street, NW., by appointment. To make an appointment, call (202) 906–5922, send an e-mail to *public.info@ots.treas.gov,* or send a facsimile transmission to (202) 906–7755.

FOR FURTHER INFORMATION CONTACT: For further information or to obtain a copy of the submission to OMB, please contact Ira L. Mills at *ira.mills@ots.treas.gov,* (202) 906–6531, or facsimile number (202) 906–6518, Regulations and Legislation Division, Chief Counsel's Office, Office of Thrift Supervision, 1700 G Street, NW., Washington, DC 20552.

SUPPLEMENTARY INFORMATION: OTS may not conduct or sponsor an information collection, and respondents are not required to respond to an information collection, unless the information collection displays a currently valid OMB control number. As part of the approval process, we invite comments on the following information collection.

Title of Proposal: Management Official Interlocks.

OMB Number: 1550–0051.

Form Number: N/A.

Description: The purpose of the Depository Institution Management Interlocks Act is to foster competition by generally prohibiting a management official from serving two unaffiliated depository organizations in situations where the management interlock would likely have an anticompetitive effect. 12 U.S.C. 3201–3208. This applies to service as a management official of an institution, savings and loan association, and affiliates of either.

OTS regulations set forth several interlocking relationships that are prohibited. 12 CFR part 563f. Generally, a management official of a depository institution or depository holding company may not serve as a management official of an unaffiliated depository institution or depository holding company if the entities in question (or a depository institution affiliate thereof) have offices in the same community or metropolitan statistical area or are of a certain asset size.

Type of Review: Extension of a currently approved collection.

Affected Public: Business or other for-profit.

Estimated Number of Respondents: 3.

Estimated Number of Responses: 3.

Estimated Burden Hours per Response: 4 hours.

Estimated Frequency of Response: Other; per transaction.

Estimated Total Burden: 12 hours.

Clearance Officer: Ira L. Mills, (202) 906–6531, Office of Thrift Supervision, 1700 G Street, NW., Washington, DC 20552.

Dated: October 14, 2008.

Deborah Dakin,

Senior Deputy Chief Counsel, Regulations and Legislation Division.

[FR Doc. E8–24776 Filed 10–17–08; 8:45 am]

BILLING CODE 6720–01–P

DEPARTMENT OF THE TREASURY

Office of Thrift Supervision

Capital Distribution

AGENCY: Office of Thrift Supervision (OTS), Treasury.

ACTION: Notice and request for comment.

SUMMARY: The proposed information collection request (ICR) described below has been submitted to the Office of Management and Budget (OMB) for review and approval, as required by the Paperwork Reduction Act of 1995. OTS is soliciting public comments on the proposal.

DATES: Submit written comments on or before November 19, 2008. A copy of this ICR, with applicable supporting documentation, can be obtained from RegInfo.gov at *http://www.reginfo.gov/public/do/PRAMain*.

ADDRESSES: Send comments, referring to the collection by title of the proposal or by OMB approval number, to OMB and OTS at these addresses: Office of Information and Regulatory Affairs, Attention: Desk Officer for OTS, U.S. Office of Management and Budget, 725 17th Street, NW., Room 10235, Washington, DC 20503, or by fax to (202) 395–6974; and Information Collection Comments, Chief Counsel's Office, Office of Thrift Supervision, 1700 G Street, NW., Washington, DC 20552, by fax to (202) 906–6518, or by e-mail to *infocollection.comments@ots.treas.gov*. OTS will post comments and the related index on the OTS Internet Site at *http://www.ots.treas.gov*. In addition, interested persons may inspect comments at the Public Reading Room, 1700 G Street, NW., by appointment. To make an appointment, call (202) 906–5922, send an e-mail to *public.info@ots.treas.gov*, or send a facsimile transmission to (202) 906–7755.

FOR FURTHER INFORMATION CONTACT: For further information or to obtain a copy of the submission to OMB, please contact Ira L. Mills at *ira.mills@ots.treas.gov* (202) 906–6531, or facsimile number (202) 906–6518, Regulations and Legislation Division, Chief Counsel's Office, Office of Thrift Supervision, 1700 G Street, NW., Washington, DC 20552.

SUPPLEMENTARY INFORMATION: OTS may not conduct or sponsor an information collection, and respondents are not required to respond to an information collection, unless the information collection displays a currently valid OMB control number. As part of the approval process, we invite comments on the following information collection.

Title of Proposal: Capital Distribution.

OMB Number: 1550–0059.

Form Number: 1583.

Description: The OTS reviews the information to determine whether the request of savings associations is in accordance with existing statutory and regulatory criteria. In addition, the information provides the OTS with a mechanism for monitoring capital distributions since these distributions can reduce an association's capital and perhaps place it at risk.

Type of Review: Extension of a currently approved collection.

Affected Public: Business or other for-profit.

Estimated Number of Respondents: 495.

Estimated Number of Responses: 495.

Estimated Burden Hours per Response: Between 16 minutes and 4 hours.

Estimated Frequency of Response: Other; as required.

Estimated Total Burden: 546 hours.

Clearance Officer: Ira L. Mills, (202) 906–6531, Office of Thrift Supervision, 1700 G Street, NW., Washington, DC 20552.

Dated: October 14, 2008.

Deborah Dakin,

Senior Deputy Chief Counsel, Regulations and Legislation Division.

[FR Doc. E8–24778 Filed 10–17–08; 8:45 am]

BILLING CODE 6720–01–P

DEPARTMENT OF THE TREASURY

Office of Thrift Supervision

Application Processing Fees

AGENCY: Office of Thrift Supervision (OTS), Treasury.

ACTION: Notice and request for comment.

SUMMARY: The proposed information collection request (ICR) described below has been submitted to the Office of Management and Budget (OMB) for review and approval, as required by the Paperwork Reduction Act of 1995. OTS is soliciting public comments on the proposal.

DATES: Submit written comments on or before November 19, 2008. A copy of this ICR, with applicable supporting documentation, can be obtained from RegInfo.gov at *http://www.reginfo.gov/public/do/PRAMain*.

ADDRESSES: Send comments, referring to the collection by title of the proposal or by OMB approval number, to OMB and OTS at these addresses: Office of Information and Regulatory Affairs, *Attention:* Desk Officer for OTS, U.S. Office of Management and Budget, 725 17th Street, NW., Room 10235, Washington, DC 20503, or by fax to (202) 395–6974; and Information Collection Comments, Chief Counsel's Office, Office of Thrift Supervision, 1700 G Street, NW., Washington, DC 20552, by fax to (202) 906–6518, or by e-mail to *infocollection.comments@ots.treas.gov*. OTS will post comments and the related index on the OTS Internet Site at *http://www.ots.treas.gov*. In addition, interested persons may inspect comments at the Public Reading Room, 1700 G Street, NW., by appointment. To make an appointment, call (202) 906–5922, send an e-mail to *public.info@ots.treas.gov*, or send a facsimile transmission to (202) 906–7755.

FOR FURTHER INFORMATION CONTACT: For further information or to obtain a copy of the submission to OMB, please contact Ira L. Mills at *ira.mills@ots.treas.gov,* (202) 906–6531, or facsimile number (202) 906–6518, Regulations and Legislation Division, Chief Counsel's Office, Office of Thrift Supervision, 1700 G Street, NW., Washington, DC 20552.

SUPPLEMENTARY INFORMATION: OTS may not conduct or sponsor an information collection, and respondents are not required to respond to an information collection, unless the information collection displays a currently valid OMB control number. As part of the approval process, we invite comments on the following information collection.

Title of Proposal: Application Processing Fees.

OMB Number: 1550–0053.

Form Number: N/A.

Description: Pursuant to Section 9 of the Home Owners' Loan Act, 12 U.S.C. 1467, the Director of the OTS is authorized to charge assessments to recover the costs of examining savings associations and their affiliates, to charge fees to recover the costs of processing applications and other filings, and to charge fees to cover OTS's direct and indirect expenses in regulating savings associations and their affiliates.

An institution must submit a fee with certain applications, including Securities and Exchange Act of 1934 filings, notices, and requests (hereafter collectively referred to as ''applications''), before such applications will be accepted for processing by OTS. 12 CFR Part 502.5. The institution is required to state how it calculates the appropriate fee, in accordance with OTS's schedule. 12

CFR Part 502.70. The most recent fee schedule was published in Thrift Bulletin TB 48–21 dated May 28, 2004.

Type of Review: Extension of a currently approved collection.

Affected Public: Business or other for-profit.

Estimated Number of Respondents: 1,477.

Estimated Number of Responses: 1,477.

Estimated Burden Hours per Response: 2 minutes.

Estimated Frequency of Response: Other; as required.

Estimated Total Burden: 49 hours.

Clearance Officer: Ira L. Mills, (202) 906–6531, Office of Thrift Supervision, 1700 G Street, NW., Washington, DC 20552.

Dated: October 14, 2008.

Deborah Dakin,

Senior Deputy Chief Counsel, Regulations and Legislation Division.

[FR Doc. E8–24779 Filed 10–17–08; 8:45 am]

BILLING CODE 6720–01–P

DEPARTMENT OF THE TREASURY

Office of Thrift Supervision

Application for Issuance of Subordinated Debt Securities/Notice of Issuance of Subordinated Debt or Mandatorily Redeemable Preferred Stock

AGENCY: Office of Thrift Supervision (OTS), Treasury.

ACTION: Notice and request for comment.

SUMMARY: The proposed information collection request (ICR) described below has been submitted to the Office of Management and Budget (OMB) for review and approval, as required by the Paperwork Reduction Act of 1995. OTS is soliciting public comments on the proposal.

DATES: Submit written comments on or before November 19, 2008. A copy of this ICR, with applicable supporting documentation, can be obtained from RegInfo.gov at *http://www.reginfo.gov/public/do/PRAMain*.

ADDRESSES: Send comments, referring to the collection by title of the proposal or by OMB approval number, to OMB and OTS at these addresses: Office of Information and Regulatory Affairs, Attention: Desk Officer for OTS, U.S. Office of Management and Budget, 725 17th Street, NW., Room 10235, Washington, DC 20503, or by fax to (202) 395–6974; and Information Collection Comments, Chief Counsel's Office, Office of Thrift Supervision, 1700 G Street, NW., Washington, DC 20552, by fax to (202) 906–6518, or by e-mail to *infocollection.comments@ots.treas.gov*. OTS will post comments and the related index on the OTS Internet Site at *http://www.ots.treas.gov*. In addition, interested persons may inspect comments at the Public Reading Room, 1700 G Street, NW., by appointment. To make an appointment, call (202) 906–5922, send an e-mail to *public.info@ots.treas.gov*, or send a facsimile transmission to (202) 906–7755.

FOR FURTHER INFORMATION CONTACT: For further information or to obtain a copy of the submission to OMB, please contact Ira L. Mills at *ira.mills@ots.treas.gov*, (202) 906–6531, or facsimile number (202) 906–6518, Regulations and Legislation Division, Chief Counsel's Office, Office of Thrift Supervision, 1700 G Street, NW., Washington, DC 20552.

SUPPLEMENTARY INFORMATION: OTS may not conduct or sponsor an information collection, and respondents are not required to respond to an information collection, unless the information collection displays a currently valid OMB control number. As part of the approval process, we invite comments on the following information collection.

Title of Proposal: Application for Issuance of Subordinated Debt Securities/Notice of Issuance of Subordinated Debt or Mandatorily Redeemable Preferred Stock.

OMB Number: 1550–0030.

Form Number: 1344 and 1561.

Description: The information collection provides the OTS with necessary details to determine if the proposed issuance of securities will benefit the savings association or create unreasonable risks. If the information required were not collected, the OTS would not be able to properly evaluate whether the request to issue securities conforms to the applicable statutory and regulatory requirements.

Type of Review: Extension of a currently approved collection.

Affected Public: Business or other for-profit.

Estimated Number of Respondents: 7.

Estimated Number of Responses: 7.

Estimated Burden Hours per Response: 1 hour.

Estimated Frequency of Response: On occasion.

Estimated Total Burden: 7 hours.

Clearance Officer: Ira L. Mills, (202) 906–6531, Office of Thrift Supervision, 1700 G Street, NW., Washington, DC 20552.

Dated: October 14, 2008.

Deborah Dakin,

Senior Deputy Chief Counsel, Regulations and Legislation Division.

[FR Doc. E8–24782 Filed 10–17–08; 8:45 am]

BILLING CODE 6720–01–P

Federal Register

Monday,
October 20, 2008

Part II

Environmental Protection Agency

40 CFR Part 63

National Emission Standards for Halogenated Solvent Cleaning; Proposed Rule

ENVIRONMENTAL PROTECTION AGENCY

40 CFR Part 63

[EPA–HQ–OAR–2002–0009; FRL–8727–5]

RIN 2060–AP07

National Emission Standards for Halogenated Solvent Cleaning

AGENCY: Environmental Protection Agency (EPA).

ACTION: Proposed Notice of Reconsideration and Request for Public Comment.

SUMMARY: On May 3, 2007, EPA promulgated the final rule titled: National Air Emission Standards for Hazardous Air Pollutants: Halogenated Solvent Cleaning (the Halogenated Solvent Cleaning rule) pursuant to sections 112(d)(6) and 112(f) of the Clean Air Act. The Halogenated Solvent Cleaning rule set facility-wide emission limits for certain halogenated solvent cleaning machines and a May 3, 2010, compliance deadline.

Following promulgation of the Halogenated Solvent Cleaning rule, the Administrator received several petitions for reconsideration, pursuant to Clean Air Act section 307(d)(7)(B). The purpose of this notice is to initiate a process for responding to certain issues raised in the petitions. We are requesting comment on the particular issues for which we are granting reconsideration, and those issues are identified, in detail, below. Specifically, we are requesting comment on the revised risk assessment, our use of the 2002 National Emissions Inventory data in lieu of the 1999 National Emissions Inventory data, which was used at proposal, our ample margin of safety determination under Clean Air Act section 112(f)(2), our determination under Clean Air Act section 112(d)(6), and the compliance deadline.

DATES: *Comments.* Comments must be received on or before December 4, 2008.

Public Hearing. If anyone contacts EPA requesting to speak at a public hearing by October 30, 2008, a public hearing will be held November 4, 2008.

ADDRESSES: Submit your comments, identified by Docket ID No. EPA–HQ–OAR–2002–0009, by one of the following methods:

- *http://www.regulations.gov*. Follow the on-line instructions for submitting comments.
- *E-mail: a-and-r-docket@epa.gov.*
- *Fax:* (202)566–1741.
- *Mail:* Air and Radiation Docket, EPA, Mailcode: 6102T, 1200 Pennsylvania Ave., NW., Washington, DC 20460. Please include a duplicate copy, if possible. We request that a separate copy of each public comment also be sent to the contact person listed below (see **FOR FURTHER INFORMATION CONTACT**).
- *Hand Delivery:* In person or by courier, deliver comments to: EPA Docket Center (2822T), EPA West Building, Room 3334, 1301 Constitution Ave., NW., Washington, DC 20004. Such deliveries are only accepted during the Docket's normal hours of operation and special arrangements should be made for deliveries of boxed information. We request that a separate copy of each public comment also be sent to the contact person listed below (see **FOR FURTHER INFORMATION CONTACT**).

Instructions: Direct your comments to Docket ID No. EPA–HQ–OAR–2002–0009. EPA's policy is that all comments received will be included in the public docket without change and may be made available online at *http://www.regulations.gov*, including any personal information provided, unless the comment includes information claimed to be confidential business information (CBI) or other information whose disclosure is restricted by statute. Do not submit information that you consider to be CBI or otherwise protected through *http://www.regulations.gov* or e-mail. The *http://www.regulations.gov* Web site is an ''anonymous access'' system, which means EPA will not know your identity or contact information unless you provide it in the body of your comment. If you send an e-mail comment directly to EPA without going through *http://www.regulations.gov*, your e-mail address will be automatically captured and included as part of the comment that is placed in the public docket and made available on the Internet. If you submit an electronic comment, EPA recommends that you include your name and other contact information in the body of your comment and with any disk or CD–ROM you submit. If EPA cannot read your comment due to technical difficulties and cannot contact you for clarification, EPA may not be able to consider your comment. Electronic files should avoid the use of special characters, any form of encryption, and be free of any defects or viruses.

Docket: All documents in the docket are listed in the *http://www.regulations.gov* index. Although listed in the index, some information is not publicly available, e.g., CBI or other information whose disclosure is restricted by statute. Certain other material, such as copyrighted material, will be publicly available only in hard copy. Publicly available docket materials are available either electronically in *http://www.regulations.gov* or in hard copy at the EPA Docket Center, Docket ID No. EPA–HQ–OAR–2002–0009, EPA West Building, Room 3334, 1301 Constitution Ave., NW., Washington, DC. The Public Reading Room is open from 8:30 a.m. to 4:30 p.m., Monday through Friday, excluding legal holidays. The telephone number for the Public Reading Room is (202) 566–1744, and the telephone number for the Air and Radiation Docket is (202) 566–1742.

FOR FURTHER INFORMATION CONTACT: For questions about this proposed action, contact Mr. H. Lynn Dail, Office of Air Quality Planning and Standards, Sector Policies and Programs Division, Natural Resources and Commerce Group (E143–03), U.S. Environmental Protection Agency, Research Triangle Park, NC 27711; telephone number: (919) 541–2363; fax number: (919) 541–3470; and e-mail address: *dail.lynn@epa.gov*. For specific information regarding the modeling methodology, contact Ms. Elaine Manning, Office of Air Quality Planning and Standards, Health and Environmental Impacts Division, Sector Based Assessment Group (C539–02), U.S. Environmental Protection Agency, Research Triangle Park, NC 27711; telephone number: (919) 541–5499; fax number: (919) 541–0840; and e-mail address: *manning.elaine@epa.gov*. For information about the applicability of these national emission standards for hazardous air pollutants (NESHAP) to a particular entity, contact Mr. Scott Throwe, Office of Enforcement and Compliance Assurance, U.S. Environmental Protection Agency, Washington, DC, (202) 564–7013; and e-mail address: *throwe.scott@epa.gov*.

SUPPLEMENTARY INFORMATION: Regulated Entities. Categories and entities potentially affected by this notice include:

Category	NAICS [1] code	Examples of potentially regulated entities
Industry	Any of numerous industries using halogenated solvent cleaning, primary affected industries include those in NAICS Codes beginning with: 331 (primary metal manufacturing), 332 (fabricated metal manufacturing), 333 (machinery manufacturing), 334 (computer and electronic product manufacturing), 335 (electrical equipment, appliance, and component manufacturing); 336 (transportation equipment manufacturing); 337 (furniture and related products manufacturing); and 339 (misc. manufacturing).	Operations at sources that are engaged in solvent cleaning using methylene chloride (MC), perchloroethylene (PCE), or trichloroethylene (TCE).
Federal, State, local, and tribal government.		Operations at sources that are engaged in solvent cleaning using MC, PCE, or TCE.

[1] North American Industry Classification System.

This table is not intended to be exhaustive, but rather provides a guide for readers regarding entities likely to be affected by this proposed action. This action proposes to require an owner or operator of a facility that is subject to the 1994 NESHAP for Halogenated Solvent Cleaning (40 CFR part 63.460 of subpart T) to operate under certain specific emission limits. If you have any questions regarding the applicability of this proposal to a particular entity, consult the person listed in the preceding **FOR FURTHER INFORMATION CONTACT** section.

Submitting Comments/CBI. Direct your comments to Docket ID No. EPA–HQ–OAR–2002–0009. Do not submit CBI to EPA through *http://www.regulations.gov* or e-mail. Instead, send or deliver information identified as CBI only to the following address: Mr. Roberto Morales, OAQPS Document Control Officer (C404–02), U.S. Environmental Protection Agency, Office of Air Quality Planning and Standards, Research Triangle Park, NC 27711, Attention Docket ID No. EPA–HQ–OAR–2002–0009. Clearly mark the part or all of the information that you claim to be CBI. For CBI information on a disk or CD–ROM that you mail to Mr. Morales, mark the outside of the disk or CD–ROM as CBI and then identify electronically within the disk or CD–ROM the specific information that is claimed as CBI.

In addition to one complete version of the comment that includes information claimed as CBI, a copy of the comment that does not contain the information claimed as CBI must be submitted for inclusion in the public docket. If you submit a CD–ROM or disk that does not contain CBI, mark the outside of the disk or CD–ROM clearly that it does not contain CBI. Information not marked as CBI will be included in the public docket and EPA's electronic public docket without prior notice.

If you have any questions about CBI or the procedures for claiming CBI, please consult the person identified in the **FOR FURTHER INFORMATION CONTACT** section. Information marked as CBI will not be disclosed except in accordance with procedures set forth in 40 CFR part 2. *Worldwide Web (WWW).* In addition to being available in the docket, an electronic copy of this proposed action will also be available on the WWW through the Technology Transfer Network (TTN). Following signature, a copy of the proposed action will be posted on the TTN's policy and guidance page for newly proposed or promulgated rules at the following address: *http://www.epa.gov/ttn/oarpg/*. The TTN provides information and technology exchange in various areas of air pollution control.

Additional information is available in section I of this preamble and on the Halogenated Solvents Cleaning Web page at *http://www.epa.gov/ttn/atw/rrisk/rtrpg.html*. This information includes source category descriptions and detailed emissions and other data that were used as inputs to the risk assessments.

Public Hearing. If anyone contacts EPA requesting to speak at a public hearing concerning the particular issues for which we are granting reconsideration by October 30, 2008, we will hold a public hearing at 10 a.m. at EPA's Campus located at 109 T.W. Alexander Drive in Research Triangle Park, NC, or an alternate site nearby on November 4, 2008. Persons interested in presenting oral testimony should contact Ms. Joan C. Rogers, Natural Resources and Commerce Group (E143–03), Sector Policies and Programs Division, EPA, Research Triangle Park, NC 27711, telephone number: (919) 541–4487, e-mail address: *rogers.joanc@epa.gov*, by October 30, 2008. Persons interested in attending the public hearing should also call Ms. Rogers to verify the time, date, and location of the hearing. A public hearing will provide interested parties the opportunity to present data, views, or arguments concerning the proposed standards.

Outline. The information presented in this Preamble is organized as follows:

I. Background
A. What is the statutory authority for regulating hazardous air pollutants?
B. What is the Halogenated Solvent Cleaning rule?
C. What have we been asked to reconsider?
II. Proposed Response to the Petitions for Reconsideration
A. What is our proposed action?
B. What is the reason for our proposed action?
III. Discussion of Issues Subject to Reconsideration
A. Baseline Risk Assessment and Decision on Acceptable Risk
B. Decision on Ample Margin of Safety
C. Clean Air Act Section 112(d)(6) Review
D. Compliance Schedule
IV. Proposed Regulatory Text
V. Impacts
VI. Statutory and Executive Order Reviews
A. Executive Order 12866: Regulatory Planning and Review
B. Paperwork Reduction Act
C. Regulatory Flexibility Act
D. Unfunded Mandates Reform Act
E. Executive Order 13132: Federalism
F. Executive Order 13175: Consultation and Coordination With Indian Tribal Governments
G. Executive Order 13045: Protection of Children From Environmental Health and Safety Risks
H. Executive Order 13211: Actions Concerning Regulations That Significantly Affect Energy Supply, Distribution, or Use
I. National Technology Transfer Advancement Act
J. Executive Order 12898: Federal Actions to Address Environmental Justice in Minority Populations and Low-Income Populations

I. Background

A. What is the statutory authority for regulating hazardous air pollutants?

Section 112 of the Clean Air Act (CAA) establishes a two-stage regulatory process to address emissions of hazardous air pollutants (HAP) from stationary sources. In the first stage,

after EPA has identified categories of sources emitting one or more of the HAP listed in section 112(b) of the CAA, section 112(d) of the CAA calls for us to promulgate NESHAP for those sources: ''Major sources'' are those that emit or have the potential to emit any single HAP at a rate of 10 tons or more per year or 25 tons or more per year of any combination of HAP. For major sources, the technology-based standards must reflect the maximum degree of emission reductions of HAP achievable (after considering cost, energy requirements, and non-air quality health and environmental impacts) and are commonly referred to as maximum achievable control technology (MACT) standards.

The MACT floor is the minimum control level allowed for NESHAP and is defined under section 112(d)(3) of the CAA. For new sources, the MACT floor cannot be less stringent than the emission control that is achieved in practice by the best-controlled similar source. The MACT standards for existing sources can be less stringent than standards for new sources, but it cannot be less stringent than the average emission limitation achieved by the best-performing 12 percent of existing sources in the category or subcategory (or the best-performing five sources for categories or subcategories with fewer than 30 sources). In developing MACT standards, we must also consider control options that are more stringent than the floor. We may establish standards more stringent than the floor based on the consideration of the cost of achieving the emission reductions, any non-air quality health and environmental impacts, and energy requirements.

EPA is then required to review these technology-based standards and to revise them ''as necessary (taking into account developments in practices, processes, and control technologies)'' no less frequently than every 8 years, under CAA section 112(d)(6). In this proposal, we are publishing the results of our 8-year technology review for the halogenated cleaning solvent source category.

The second stage in standard-setting focuses on reducing any remaining ''residual'' risk according to CAA section 112(f). This provision requires, first, that EPA prepare a Report to Congress discussing (among other things) methods of calculating risk posed (or potentially posed) by sources after implementation of the MACT standards, the public health significance of those risks, the means and costs of controlling them, actual health effects to persons in proximity of emitting sources, and recommendations as to legislation regarding such remaining risk. EPA prepared and submitted this report (Residual Risk Report to Congress, EPA–453/R–99–001) in March 1999. Congress did not act in response to the report, thereby triggering EPA's obligation under CAA section 112(f)(2) to analyze and address residual risk.

CAA section 112(f)(2) requires us to determine for source categories subject to certain CAA section 112(d) standards whether the emission limitations provide an ample margin of safety to protect public health. If the MACT standards for HAP ''classified as a known, probable, or possible human carcinogen do not reduce lifetime excess cancer risks to the individual most exposed to emissions from a source in the category or subcategory to less than 1-in-1 million,'' EPA must promulgate residual risk standards for the source category (or subcategory) as necessary to provide an ample margin of safety to protect public health. EPA must also adopt more stringent standards, if necessary, to prevent an adverse environmental effect,[1] but must consider cost, energy, safety, and other relevant factors in doing so. In a residual risk rulemaking under section 112(f)(2), EPA may adopt standards equal to the existing MACT standards (*NRDC* v. *EPA,* 529 F.3d 1077, 1083 (D.C. Cir. 2008).

Section 112(f)(2) of the CAA expressly preserves our use of the two-step process for developing standards to address residual risk and our interpretation of ''ample margin of safety'' developed in the National Emission Standards for Hazardous Air Pollutants: Benzene Emissions from Maleic Anhydride Plants, Ethylbenzene/Styrene Plants, Benzene Storage Vessels, Benzene Equipment Leaks, and Coke By-Product Recovery Plants (Benzene NESHAP) (54 FR 38044, September 14, 1989). See *NRDC* v. *EPA,* 529 F.3d 1077 D.C. Cir. 2008). The first step in the residual risk process is the determination of acceptable risk. The second step provides for an ample margin of safety to protect public health, which is the level at which the standards are set (unless a more stringent standard is required to prevent, taking into consideration costs, energy, safety, and other relevant factors, an adverse environmental effect).

The terms ''individual most exposed,'' ''acceptable level,'' and ''ample margin of safety'' are not specifically defined in the CAA. However, CAA section 112(f)(2)(B) directs us to use the interpretation set out in the Benzene NESHAP. See also, A Legislative History of the Clean Air Act Amendments of 1990, volume 1, p. 877 (Senate debate on Conference Report). We notified Congress in the Residual Risk Report to Congress that we intended to use the Benzene NESHAP approach in making CAA section 112(f) residual risk determinations (EPA–453/R–99–001, p. ES–11).

In the Benzene NESHAP, we stated as an overall objective:

> * * * in protecting public health with an ample margin of safety, we strive to provide maximum feasible protection against risks to health from hazardous air pollutants by (1) protecting the greatest number of persons possible to an individual lifetime risk level no higher than approximately 1-in-1 million; and (2) limiting to no higher than approximately 1-in-10 thousand (i.e., 100-in-1 million) the estimated risk that a person living near a facility would have if he or she were exposed to the maximum pollutant concentrations for 70 years.

We also stated that, ''The EPA also considers incidence (the number of persons estimated to suffer cancer or other serious health effects as a result of exposure to a pollutant) to be an important measure of the health risk to the exposed population. Incidence measures the extent of health risk to the exposed population as a whole, by providing an estimate of the occurrence of cancer or other serious health effects in the exposed population.'' The EPA went on to conclude that ''estimated incidence would be weighed along with other health risk information in judging acceptability.'' As explained more fully in our Residual Risk Report to Congress, EPA does not define ''rigid line(s) of acceptability,'' but considers rather broad objectives to be weighed with a series of other health measures and factors (EPA–453/R–99–001, p. ES–11).

> The determination of what represents an ''acceptable'' risk is based on a judgment of ''what risks are acceptable in the world in which we live'' (54 FR 38045, quoting the *Vinyl Chloride* decision at 824 F.2d 1165) recognizing that our world is not risk-free.

In the Benzene NESHAP, we stated that ''EPA will generally presume that if the risk to (the maximum exposed) individual is no higher than approximately 1-in-10 thousand, that risk level is considered acceptable.'' We discussed the maximum individual lifetime cancer risk as being ''the

[1] ''Adverse environmental effect'' is defined in CAA Section 112(a)(7) as any significant and widespread adverse effect, which may be reasonably anticipated to wildlife, aquatic life, or natural resources, including adverse impacts on populations of endangered or threatened species or significant degradation of environmental quality over broad areas.

estimated risk that a person living near a plant would have if he or she were exposed to the maximum pollutant concentrations for 70 years.'' We explained that this measure of risk ''is an estimate of the upperbound of risk based on conservative assumptions, such as continuous exposure for 24 hours per day for 70 years.'' [2] We acknowledge that maximum individual lifetime cancer risk ''does not necessarily reflect the true risk, but displays a health-protective risk level which is an upper bound that is unlikely to be exceeded.'' [3]

Understanding that there are both benefits and limitations to using maximum individual lifetime cancer risk as a metric for determining acceptability, we acknowledged in the 1989 Benzene NESHAP that ''consideration of maximum individual risk * * * must take into account the strengths and weaknesses of this measure of risk.'' [4] Consequently, the presumptive risk level of 100-in-1 million (1-in-10 thousand) provides a benchmark for judging the acceptability of maximum individual lifetime cancer risk, but does not constitute a rigid line for making that determination.

The EPA also explained in the 1989 Benzene NESHAP the following:

> In establishing a presumption for MIR [5], rather than rigid line for acceptability, the Agency intends to weigh it with a series of other health measures and factors. These include the overall incidence of cancer or other serious health effects within the exposed population, the numbers of persons exposed within each individual lifetime risk range and associated incidence within, typically, a 50 kilometer (km) exposure radius around facilities, the science policy assumptions and estimation uncertainties associated with the risk measures, weight of the scientific evidence for human health effects, other quantified or unquantified health effects, effects due to co-location of facilities, and co-emission of pollutants.

In some cases, these health measures and factors taken together may provide a more realistic description of the magnitude of risk in the exposed population than that provided by maximum individual lifetime cancer risk alone.

As explained in the Benzene NESHAP, ''(e)ven though the risks judged ''acceptable'' by EPA in the first step of the Vinyl Chloride inquiry are already low, the second step of the inquiry, determining an ''ample margin of safety,'' again includes consideration of all of the health factors, and whether to reduce the risks even further. In the second step, EPA strives to provide protection to the greatest number of persons possible to an individual lifetime risk level no higher than approximately 1 in 1 million. In the ample margin decision, the EPA again considers all of the health risk and other health information considered in the first step. Beyond that information, additional factors relating to the appropriate level of control will also be considered, including costs and economic impacts of controls, technological feasibility, uncertainties, and any other relevant factors. Considering all of these factors, the EPA will establish the standard at a level that provides an ample margin of safety to protect the public health, as required by section 112.''

B. What is the Halogenated Solvent Cleaning rule?

On December 2, 1994, we promulgated national emission standards for halogenated solvent cleaning machines [6] (59 FR 61801, December 2, 1994) (1994 NESHAP), to control emissions of the halogenated solvents MC, PCE, TCE, 1,1,1,-trichloroethane (TCA), carbon tetrachloride, chloroform, and halogenated solvent blends or their vapors from halogenated solvent cleaning machines, pursuant to Section 112(d) of the CAA. The standards, which can be found in 40 CFR Subpart T, include multiple alternatives that allow maximum compliance flexibility. The final rule is available in the docket for this rulemaking. It can also be accessed at: *http://www.epa.gov/ttn/atw/degrea/halopg.html*.

Carbon tetrachloride and chloroform are no longer used in this source category. The Montreal Protocol, a multi-national treaty signed on September 16, 1987, phased out the production and use of these chlorofluorocarbons by January 1, 1996. The Montreal Protocol also phased out the production and use of TCA. Although production and use of TCA has been phased out since 1998, an exemption to the phase-out allows facilities with essential products or activities to continue their use of TCA, and facilities with non-essential activities or products to continue the use of their remaining TCA stockpiles until depleted. A declining quantity of TCA continued to be used until 2002, when all production of TCA ceased, and eventually, facilities used TCA stockpiles until depleted. Since January 1, 2002, TCA has not been manufactured for domestic use in the United States.

Halogenated solvent cleaning machines use MC, PCE, TCE and TCA to remove soils such as grease, oils, waxes, carbon deposits, fluxes, and tars from metal, plastic, fiberglass, printed circuit boards, and other surfaces. Halogenated solvent cleaning is typically performed prior to processes such as painting, plating, inspection, repair, assembly, heat treatment, and machining. Types of halogenated solvent cleaning machines include, but are not limited to, batch vapor, in-line vapor, in-line cold, and batch cold solvent cleaning machines. Buckets, pails, and beakers with capacities of 7.6 liters (2 gallons) or less are not considered halogenated solvent cleaning machines.

In May 2007, we promulgated the Halogenated Solvent Cleaning rule (72 FR 25138), which established revised standards that further limit emissions of MC, TCE and PCE from facilities engaged in halogenated solvent cleaning, pursuant to CAA section 112(f). Specifically, we promulgated a facility-wide emission limit of 60,000 kilograms per year (kg/yr) MC equivalent [7] that applied to all halogenated solvent cleaning machines with the exception of halogenated solvent cleaning machines used by the following industries: Facilities that manufacture narrow tubing, facilities that use continuous web cleaning machines, aerospace manufacturing and maintenance facilities, and military maintenance and depot facilities. We also promulgated a facility-wide emission limit of 100,000 kg/yr MC

[2] Quoted text is from the Benzene NESHAP preamble, pages 38045 and 38046.

[3] Quoted text is from the Benzene NESHAP preamble, pages 38045 and 38046.

[4] Quoted text is from the Benzene NESHAP preamble, pages 38045 and 38046.

[5] MIR is the maximum individual cancer risk.

[6] Halogenated solvent cleaning does not constitute a distinct industrial category, but is an integral part of many major industries. The five 3-digit NAICS Codes that use the largest quantities of halogenated solvents for cleaning are NAICS 337 (furniture and related products manufacturing), NAICS 332 (fabricated metal manufacturing), NAICS 335 (electrical equipment, appliance, and component manufacturing), NAICS 336 (transportation equipment manufacturing), and NAICS 339 (miscellaneous manufacturing). Additional industries that use halogenated solvents for cleaning include NAICS 331 (primary metals), NAICS 333 (machinery), and NAICS 334 (electronic equipment manufacturing). Non-manufacturing industries such as railroad (NAICS 482), bus (NAICS 485), aircraft (NAICS 481), and truck (NAICS 484) maintenance facilities; automotive and electric tool repair shops (NAICS 811); and automobile dealers (NAICS 411) also use halogenated solvent cleaning machines.

[7] All emission limits and emission rates in the assessments were converted to MC equivalents based on the relative cancer potency of the HAP emitted. The cancer potency-weighted MC equivalent emission rate was calculated as the estimated emissions for the HAP in kg/yr or lb/yr times the unit risk estimate (URE) for the HAP divided by the URE for MC.

equivalent for halogenated solvent cleaning machines used at military maintenance and depot facilities. We required existing facilities to comply with the revised standards by May 3, 2010, which is three years after the effective date of the Halogenated Solvent Cleaning rule. Further, with regard to halogenated solvent cleaning machines used by facilities that manufacture narrow tubing, facilities that use continuous web cleaning machines, and aerospace manufacturing and maintenance facilities we found, after considering risks, associated compliance costs and the availability of control measures, that the 1994 NESHAP reduces risk to acceptable levels, provides an ample margin of safety to protect public health, and prevents adverse environmental effects. We also reviewed the 1994 NESHAP as required by CAA section 112(d)(6).

C. What have we been asked to reconsider?

Following promulgation of the Halogenated Solvent Cleaning rule, the Administrator received several petitions [8] for reconsideration (Petitions), under CAA section 307(d)(7)(B). Generally, petitioners claimed that the Halogenated Solvent Cleaning rule contained legal interpretations and information that are of central relevance to the final rule that were not sufficiently reflected at proposal, and that they, therefore, did not have adequate opportunity to provide input during the designated public comment period. Further, petitioners claimed that additional information on compliance measures had become available since the close of the public comment period for the Halogenated Solvent Cleaning rule, and that this new information is also of central relevance to the Halogenated Solvent Cleaning rule.

On August 15, 2007, EPA informed petitioners of its intent to initiate notice and comment rulemaking to address the Petitions. We also informed petitioners that the particular issues for reconsideration and the specifics of the reconsideration process would be addressed in a forthcoming **Federal Register** notice. Additionally, we denied the request to stay the effectiveness of the Halogenated Solvent Cleaning rule pending completion of the reconsideration proceedings. (These letters are in the docket for this rulemaking.)

Finally, petitioners challenged the Halogenated Solvent Cleaning rule in the Court of Appeals for the District of Columbia Circuit.[9] Because we intended to initiate notice and comment rulemaking to address the Petitions, the Court has granted our request to hold the litigation in abeyance. The Court has directed the parties to the litigation to file Motions to Govern Further Proceedings by November 3, 2008.

II. Proposed Response to the Petitions for Reconsideration

A. What is our proposed action?

In this action, we are proposing to find that the risk associated with the 1994 NESHAP for the halogenated solvent cleaning source category is acceptable within the meaning of Section 112(f). We are also proposing various regulatory options that would provide an ample margin of safety to protect public health and prevent adverse environmental effects. These proposed requirements would apply to owners and operators of halogenated solvent cleaning machines that are subject to the 1994 NESHAP. We are proposing these requirements under both CAA sections 112(d)(6) and 112(f)(2). For existing sources that were not subject to the emission reduction requirements in the Halogenated Solvent Cleaning rule,[10] we are proposing a 2-year compliance deadline from the date of publication of the final rule in the **Federal Register**. As to those sources that were subject to emission reduction requirements in the Halogenated Solvent Cleaning rule,[11] if the final rule on reconsideration changes those requirements and makes them more stringent, we propose that these sources have two years from the date of publication of the final rule to comply with the requirements of the final rule. We believe that such an extension is appropriate to allow the affected facilities time to meet the more stringent emission limitations.

We are seeking public comment on all aspects of this proposed reconsideration rule. As noted above, the issues identified below are the ones for which we are granting reconsideration. We will convey our decision as to any other issues raised in the reconsideration petitions no later than the date by which we take final action on the issues discussed in this action.

B. What is the reason for our proposed action?

On August 17, 2006, pursuant to CAA section 112(f), we proposed revised standards (71 FR 47670, August 17, 2006) (August 2006 Proposal) to further limit emissions of MC, TCE and PCE from facilities engaged in halogenated solvent cleaning. We co-proposed emission limits of 25,000 kg/yr MC equivalent and 40,000 kg/yr MC equivalent to provide an ample margin of safety to protect public health and prevent adverse environmental effects. The August 2006 proposal also identified other levels of emission reductions, including the 60,000 and 100,000 kg/yr MC equivalent levels. 71 FR 47680–81. We indicated that we expected to finalize one of the two co-proposed options, and that the standards finalized would apply to the entire source category in addition to the 1994 NESHAP requirements. We also proposed a compliance deadline for existing sources of two years after the effective date of the final rule.

Industry, States, solvent manufacturers, industry trade associations and district air associations submitted comments in response to our August 2006 proposal. Industry's comments were primarily submitted by the aerospace manufacturing and maintenance industry, the narrow tubing manufacturing industry, facilities that use continuous web cleaning machines, and military maintenance and depot facilities. Comments focused on associated compliance costs, technical feasibility, and the proposed compliance deadline. In response to these comments, we issued a Notice of Data Availability (NODA), on December 14, 2006 (71 FR 75182), requesting specific information on compliance costs, technical feasibility, and compliance deadlines as they related to halogenated solvent machines used by the above-referenced industries. Responses to the NODA provided significant data and information that led

[8] These petitions for reconsideration were filed by the Commonwealth of Pennsylvania Department of Environmental Protection, Natural Resources Defense Council, Citizens for Pennsylvania's Future and Sierra Club, several State and federal legislators and the Governor of the Commonwealth of Pennsylvania (petitioners).

[9] Commonwealth of Pennsylvania Department of Environmental *Protection* v. *EPA,* No. 07–1129 (D.C. Cir.); Citizens for Pennsylvania's Future and *Sierra Club* v. *EPA,* No. 07–1255 (D.C. Cir.); *Natural Resources Defense Council* v. *EPA,* No. 07–1256 (D.C. Cir.). These cases have since been consolidated.

[10] These sources include halogenated solvent cleaning machines used by facilities that manufacture narrow tubing, facilities that manufacture specialized products requiring continuous web cleaning machines, and aerospace manufacturing and maintenance facilities.

[11] These sources include halogenated solvent cleaning machines at military maintenance and depot facilities and the general population of halogenated solvent cleaning machines. The general population of halogenated solvent cleaning machines includes all halogenated solvent cleaning machines, except those machines used by facilities that manufacture narrow tubing, facilities that manufacture specialized products requiring continuous web cleaning, aerospace manufacturing and maintenance facilities, and military maintenance and depot facilities.

EPA to re-evaluate the data and assumptions used to estimate risks, costs and technical feasibility of compliance with the co-proposed emission limits.

In the Halogenated Solvent Cleaning rule, we presented our re-evaluation of risks, costs and technical feasibility of compliance with the co-proposed emission limits. As a result of our re-evaluation, we promulgated a facility-wide emission limit of 60,000 kg/yr MC equivalent for all halogenated solvent cleaning machines with the exception of halogenated solvent cleaning machines used by facilities that manufacture narrow tubing, facilities that use continuous web cleaning machines, aerospace manufacturing and maintenance facilities, and military maintenance and depot facilities. We determined that this emission limit would provide an ample margin of safety to protect health and prevent adverse environmental effects. For all halogenated solvent cleaning machines used at military maintenance and depot facilities, we promulgated a facility-wide emission limit of 100,000 kg/yr MC equivalent that would provide an ample margin of safety to protect health and prevent adverse environmental effects. We also set a compliance deadline of three years from the effective date of the Halogenated Solvent Cleaning rule. Finally, with regard to facilities that use continuous web cleaning machines and halogenated solvent cleaning machines used by facilities that manufacture narrow tubing and aerospace manufacturing and maintenance facilities, we found that the current level of control required by the 1994 NESHAP reduces HAP emissions to levels that provide an ample margin of safety to protect public health and prevent any adverse environmental effects.

As noted earlier above, following promulgation of the Halogenated Solvent Cleaning rule, the Administrator received several petitions for reconsideration, under CAA Section 307(d)(7)(B). In general, petitioners alleged that the following issues appeared for the first time in the Halogenated Solvent Cleaning rule, making it impracticable to raise objections during the period provided for public comment: The 60,000 kg/yr MC equivalent limit for the general population of halogenated solvent cleaning machines; the 100,000 kg/yr MC equivalent limit for halogenated solvent cleaning machines used by military maintenance and depot facilities; EPA's decision to use in support of its risk assessment, data from the 2002 National Emissions Inventory (NEI) as opposed to data from the 1999 NEI; EPA's conclusion that the 1994 NESHAP reduces risk to acceptable levels and provides an ample margin of safety to protect public health for aerospace manufacturing and maintenance facilities, facilities that manufacture narrow tubing, and facilities that use continuous web cleaning machines; EPA's technical feasibility and cost analyses in the final rule; and the 3-year compliance period for existing sources.

Petitioners also provided information on technical feasibility that was not otherwise available to EPA at the time of promulgation of the Halogenated Solvent Cleaning rule. That information shows certain facilities that manufacture narrow tubing either taking steps or planning to take steps to reduce HAP emissions at their facilities. This information is discussed in greater detail below.

In response to the petitions, we are reconsidering various issues, and those issues are described in detail below.

III. Discussion of Issues Subject to Reconsideration

A. Baseline Risk Assessment and Decision on Acceptable Risk

In addition to the general issues raised above, petitioners raised several specific issues relating to the baseline risk assessment and EPA's decision on acceptable risk.

Before discussing the issues on which we are granting reconsideration, we would like to clarify a misunderstanding that was revealed to us in the Petitions. Specifically, certain petitioners contend that by removing facilities that use continuous web cleaning machines, and halogenated solvent cleaning machines used by facilities that manufacture narrow tubing, aerospace manufacturing and maintenance, and military maintenance and depot facilities in the risk assessments for the Halogenated Solvent Cleaning rule, we failed to consider the health risks from the entire source category and thus, that the Halogenated Solvent Cleaning rule deviated from the Benzene NESHAP (54 FR 38044, September 14, 1989) framework and CAA Section 112(f)(2)(B). Petitioners also contend that the risks associated with the source category are ''gross underestimates of actual risks'' because of our removal of this subset of sources. One petitioner asserts that because the risk assessment at proposal showed the baseline maximum individual risk (MIR) as 200-in-1 million with 0.40 annual cancer incidences, as compared to 100-in-1 million and 0.55 annual cancer incidences presented in the Halogenated Solvent Cleaning rule, the resulting 38 percent increased cancer incidence was not subject to public comment. The petitioner further contends that cancer risks would have increased beyond 38 percent but for the exemptions of certain halogenated solvent cleaning machines that had a further effect of removing the Collegeville, PA, population from the population risk distribution.

However, contrary to petitioners understanding, we performed a risk assessment for the entire halogenated solvent cleaning machines source category both for the August 2006 Proposal (71 FR 47670) and for the Halogenated Solvent Cleaning rule (72 FR 25138). Our re-evaluation of risks involved the re-assessment of the risks for the entire category using both the 1999 and the 2002 NEI inventory (discussed in greater detail, below), which was not available at the time of the August 2006 Proposal, but was available for the Halogenated Solvent Cleaning rule. The preamble and risk assessment also provided separate analyses for each of the industry sectors (facilities that manufacture narrow tubing, aerospace manufacturing and maintenance, military maintenance and depots, facilities that use continuous web cleaning machines) and the subset of remaining facilities not included in one of these four sectors that make up the halogenated solvent cleaning source category. This approach allowed us to compare the risk contribution of each sector to the overall risks presented by the facilities in the halogenated solvent source category. In this way, we were able to show the contribution of each sector's risk to the risk from the entire category. Therefore, contrary to petitioners' allegations, our re-analyses of the risks in the Halogenated Solvent Cleaning rule did not exclude a subset of the halogenated solvent cleaning machines source category and therefore, did not understate or fail to consider a portion of the risks associated with the entire source category.

With regard to the issues on which EPA is granting reconsideration, one petitioner states that we failed to consider the risk assessment prepared by the Commonwealth of Pennsylvania Department of Environmental Protection (PADEP),[12] and that our maximum

[12] In addition to raising the PADEP risk assessment in their Petitions, Petitioners identified certain other documents dated after the close of the public comment period, which they argue are of central relevance to the Halogenated Solvent Cleaning rule. If the Petitioners believe that these documents are relevant to the issues on which we

Continued

individual cancer risk level of 70-in-1 million associated with the narrow tubing industry was erroneous given the associated risks of 160-in-1 million indicated by PADEP's risk assessment. Another petitioner contends that the certain assumptions underlying EPA's risk assessment for the Halogenated Solvent Cleaning rule are erroneous. In support of its position, the petitioner cites EPA's use of census block centroids to predict MIR. The petitioner argues that EPA should have estimated risk at the nearest residence and that EPA's census block approach may have resulted in an underprediction of risk.

We reviewed the risk assessment prepared by the PADEP, and we disagree with their conclusion that our estimated MIR risk level associated with the narrow tubing industry is erroneous. The PADEP risk assessment was based on ambient monitoring data collected in 2004. (PADEP continues to collect ambient data on TCE in the Collegeville, PA, area.) From 2004 to 2007, the annual average TCE concentrations measured over the 4 years ranged from 0.6 micrograms per cubic meter ($\mu g/m^3$) to 1.5 $\mu g/m^3$ (avg. = 0.9 $\mu g/m^3$) at the Evansberg, PA site and 1.2 $\mu g/m^3$ to 1.3 $\mu g/m^3$ (avg. = 1.3 $\mu g/m^3$) at the Trappe, PA, site. We extended our risk assessment, which was based on dispersion modeling of TCE emissions from the two Collegeville, PA, halogenated solvent cleaning facilities in the 2002 NEI emissions inventory, to estimate TCE concentrations of 0.8 $\mu g/m^3$ and 1.4 $\mu g/m^3$ at the Evansberg and Trappe monitoring sites, respectively. Thus, from an ambient air concentration perspective, the two risk assessments are consistent. The risk assessments differ, however, because TCE exposures were assessed using different cancer unit risk estimates (URE) for TCE. Following the long-established EPA policy, we used the California EPA (CalEPA) inhalation URE for TCE. In contrast, PADEP used a unit risk value for TCE developed by EPA in a draft report issued in 2001. That draft report was subjected to peer review by the EPA's Science Advisory Board, and the Board raised several important issues. As a result of the Science Advisory Board's input on the draft report, EPA asked the National Academy of Sciences (NAS) to examine issues critical to developing an objective, realistic, and scientifically-based health assessment of TCE. The NAS released their report in 2006, providing EPA further insight as they develop a revised health risk assessment for TCE. EPA never finalized the 2001 draft report because of the significant issues raised by the Science Advisory Board and NAS. Thus, PADEP's use of EPA's draft 2001 TCE risk assessment neither satisfies the basic requirements of our peer review policy, nor is the draft 2001 TCE risk assessment currently endorsed by the EPA's Office of Research and Development.

In addition, PADEP used an oral cancer slope value from the draft TCE document instead of the inhalation value derived in that document, and extrapolated the oral cancer slope factor for use in their inhalation risk assessment. Use of such an extrapolation is considered substantially inferior to use of values developed directly from inhalation data. PADEP's use of the draft extrapolated URE in their assessment resulted in the estimation of a maximum individual cancer risk of 160-in-1 million at the Trappe site, a risk which is approximately 50 times higher than what the EPA risk assessment indicates for that location. Thus, while both risk assessments are consistent with respect to the estimates of ambient TCE concentrations around these monitoring sites, there is a significant difference in the estimation of individual cancer risk. The difference results from PADEP using a cancer potency value that would not be considered acceptable under EPA's Information Quality Guidelines because it did not withstand a rigorous scientific peer review.

Several petitioners stated that the EPA's decision to use available data from the 2002 NEI, instead of data from the 1999 NEI as proposed, appeared for the first time in the Halogenated Solvent Cleaning rule, making it impracticable to raise objections during the period provided for public comment.

Based on public comments on our August 2006 Proposal, our risk assessment for the entire source category that was presented in the Halogenated Solvent Cleaning rule used the 2002 NEI database instead of the 1999 NEI database as presented at proposal. The 2002 NEI database was unavailable at proposal. Further, since receipt of the petitions, we have conducted additional risk assessments using facility emissions from both the 1999 and 2002 NEI, explicitly assessing the risks separately for each of the industry sectors identified above at various levels of control, similar to our August 2006 Proposal and the Halogenated Solvent Cleaning rule. In this way, we have been able to show the contribution of each sector's risk to the risk from the entire source category. The 1999 NEI contains information for 1,167 halogenated solvent cleaning facilities, out of which 743 emit carcinogenic HAP. The 2002 NEI contains information for 1,080 halogenated solvent cleaning facilities, out of which 734 emit carcinogenic HAP. Considering the uncertainties associated with the development of emission inventories, we consider neither the 1999 nor the 2002 NEI to be accurate in an absolute sense. Rather, we consider them to be our best estimates of annual snapshots of emissions for this source category. For each base year risk assessment, we scale-up the modeled results to reflect what we believe to be the true number of facilities in the source category, approximately 1,900. Given our knowledge of the NEI database and as a result of meetings with industry we believe that 1,900 is a better estimate of the number of sources in the source category.

To develop an estimate of facilities currently operating, EPA asked State and EPA regional source category contacts for estimates of the number of cleaning machines in their jurisdictions. As a result of that effort, EPA concluded that there were 3,821 halogenated solvent cleaning machines nationwide. EPA also determined that there was on average about two machines per facility, therefore, EPA estimated a total of 1,932 solvent cleaning facilities currently existing nationwide. Therefore, for the development of this rule, the number of sources in this source category was assumed to be about 3,800 cleaning machines located at 1,900 facilities nationwide. This estimate is based on information collected by EPA in 1998 and in 2005. If the scale-up had not been implemented the cost and HI results would be reduced by 56 percent (given that the scale-up factor is 1.76) relative to the number of facilities and may not truly represent the affected universe. We request comment on the use of the scale-up to accurately represent the universe of sources.

In addition, the Johnson and Capel (1992) population mobility model,[13] used to develop the population risk distribution for the Halogenated Solvent Cleaning rule, was updated subsequent to promulgation of that rule. The updated model reflects the use of more recent Surveys of Income and Program

are granting reconsideration in this rule, we invite petitioners to submit the documents to EPA during the public comment period. We will consider such documents at the same time we consider all significant comments received during the comment period for this action.

[13] Ted Johnson and Jim Capel. 1992. A Monte Carlo Approach to Simulating Residential Occupancy Periods and Its Application to the General U.S. Population, EPA–450/3–92–011, U.S. Environmental Protection Agency, Research Triangle Park, N.C. (This information has been placed in the docket for this rule).

Participation (SIPP) data and a newer, more complete modeling approach. The new model randomly selects subjects from the U.S. Census Bureau's American Community Survey database,[14] and estimates time already spent in the residence, future time to be spent in the residence, and future length of life. These estimates are then combined to predict the total time, past and future, that the subject would occupy the current residence. Results are then compared with SIPP residence time data and adjusted to compensate for ''residential inertia'' (i.e., a tendency in the SIPP data for long-term residents to have lower-than-expected move rates). As a result of this update to the modeling approach, the baseline population risk estimates in this preamble differ somewhat from those presented in the Halogenated Solvent Cleaning rule. This preamble (section III) presents risk estimates based on the 2002 NEI. We believe the 2002 NEI is likely to provide more accurate estimates of current emissions from the source category (compared to the 1999 NEI), reflecting known decreases in solvent demand and use.

Since promulgation of the Halogenated Solvent Cleaning rule, we have also become aware of a newer assessment for non-cancer effects of TCE developed by the New York State Department of Health (NYS DOH). The NYS DOH states that their ''air criterion,'' is ''essentially equivalent to an United States Environmental Protection Agency's (US EPA, 2002a) reference concentration (RfC) * * * or an Agency for Toxic Substances and Disease Registry's (ATSDR, 1996) chronic minimal risk level (MRL) * * * .''[15] In addition to evaluating a number of studies which look at numerous different toxicological endpoints, the NYS DOH air criterion relies on a 1993 study which evaluated clinical neurological effects (as measured by coordination tests) in 99 Danish workers. For 70 of these workers, the dominant exposure was TCE, while for 25 of the workers the dominant exposure was to CFC 113. Air exposures were extrapolated from measurements of the urinary metabolite TCA. Limitations of this study include some uncertainty about the actual long-term exposure levels of the workers to TCE during their employment, and that 25 of the 99 subjects were exposed primarily to CFC 113. The NYS DOH assessment is limited by gaps in the data on developmental effects and immunotoxicity, and concerns about adequacy of methods for evaluating health risks to children (limitations it shares with the CalEPA assessment). The results of the scientific review are described in the NYS DOH toxicological review document.[16]

The CalEPA inhalation reference exposure level (REL)[17] used in the risk assessment for this proposal and our previous assessment was based on a 1973 study of 19 workers who experienced symptoms of drowsiness, fatigue, headache, and eye irritation. CalEPA identified the use of human exposure data from workers exposed over a period of years as a strength of the REL. The lack of reproductive and developmental toxicity studies and the lack of a no effect level were identified as major areas of uncertainty. Both CalEPA and NYS DOH had an external peer review process and allowed for public comment before finalizing their respective assessments. The NYS DOH assessment was finalized in 2006 and the CalEPA assessment was finalized in 2000.

Non-cancer risk results were derived using the NYS DOH TCE air criterion as well as using the CalEPA value in the additional risk assessments completed since promulgation of the Halogenated Solvent Cleaning rule. The results of our additional risk assessments are summarized in section III of this preamble and the complete documentation is available in the docket for this rulemaking. In this action, we are providing this additional risk analysis and are soliciting comment on it, including comments on the use of the NYS DOH air criterion. We note that we received no comments recommending use of the NYS DOH TCE air criterion either in comment on the proposed rule, in comment on the NODA, or in any of the petitions for reconsideration submitted to the EPA.

The additional risk assessment conducted in support of this proposal reaffirms our baseline risk analysis that was presented in the Halogenated Solvent Cleaning rule. The results are summarized in Table 1, below. Specifically, the analysis confirms that: (1) The baseline MIR for the entire source category is approximately 100-in-1 million and (2) the total cancer incidence associated with the source category is approximately 0.55 cases per year. The updated population risk distribution at baseline emission levels shows that 100 people are exposed to risk levels at or above 100-in-1 million, 82,000 people are estimated to have risks between 10-in-1 million and 100-in-1 million, and 8,000,000 people are estimated to have risks between 1-in-1 million and 10-in-1 million. These values can be compared to the baseline risk estimates that we presented in the Halogenated Solvent Cleaning rule, i.e., about 25 people exposed to risks at or above 100-in-1 million, about 22,000 people at estimated risks between 10-in-1 million and 100-in-1 million risk level, and about 4,000,000 people at estimated risks between 1-in-1 million and 10-in-1 million.

Additionally, in our previous risk assessment for the Halogenated Solvent Cleaning rule, the maximum hazard index (HI) was 0.2 (this HI is associated with the compound TCA), and there were no facilities with a HI greater than 1. However, if we were to use the NYS DOH air criterion for TCE mentioned above, rather than the CalEPA REL and apply the national scaling factor[18] we estimate that there are ten facilities with HI greater than 1 and a maximum HI of 7. A chronic HI less than or equal to 1 indicated that there is no appreciable risk of adverse effects. Although, a chronic HI greater than 1 raises concern over potential toxicity, the numerical magnitude of the HI must be interpreted in the context of the supporting information. Thus, we examined these ten HI values greater than 1 in the context of uncertainties and additional supporting information. In the risk assessment document used to support the August 2006 proposal, we stated that the approach used then (and in all subsequent risk analyses for this source category) was a reasonable one which was more likely to over-predict risks than under-predict them. When we consider the distribution of the population at different HI levels, we see that out of a total exposed population of approximately 6 million people living around the ten facilities, only 2,000 people are estimated to be exposed to concentrations whose HI values exceed 1. Further, when the underlying information for the NY value is considered, we see that the NYS DOH air criterion incorporates a significant

[14] U.S. Census Bureau, 2007. American Community Survey. Available online at *http://www.census.gov/acs/www/*.

[15] New York State Department of Health, Trichloroethene Air Criteria Document, October 2006, page 1, *http://www.health.state.ny.us/environmental/chemicals/trichloroethene/docs/cd_tce.pdf.*

[16] NYS DOH toxicological review document. *http://www.health.state.ny.us/environmental/chemicals/trichloroethene/docs/cd_tce.pdf.*

[17] California EPA, 1999. Chronic toxicity summary: Trichloroethylene. Office of Environmental Health Hazard Assessment. *http://www.oehha.ca.gov/air/chronic_rels/pdf/79016.pdf.*

[18] The 2002 NEI contained 1,080 facilities and we estimate that there are a nationwide total of 1,900 facilities in this source category, we scale up the facility population by a factor of 1.76 to obtain an estimated total of facilities for the HI analysis.

degree of health protection in its use of a composite uncertainty factor of 1000. The range of maximum HI values (0.2 to 7) resulting from consideration of reference values from both CalEPA and NYS DOH is indicative of the range of uncertainty in the toxicity estimates for TCE. When the NYS DOH value is used, the maximum HI is 7; however, when the CalEPA value is used, the maximum HI becomes 0.2 and the 0.2 value is no longer driven by TCE emissions, but by TCA emissions. Thus, considering that our models would tend to overestimate risk, the limited number of people living around these ten facilities whose exposures correspond to HI values above 1, and the health-protective factors inherent in the derivation of the NY central nervous system value, we conclude that the chronic non-cancer risks estimated around these ten facilities using the NY criteria value and associated with the baseline scenario are, in this case, acceptable. We are seeking comment on whether the scaling factor applied to the narrow tubing facilities and population exposed, as discussed earlier, is appropriate in this case.

We have not conducted any additional assessment of environmental risks for this source category. The record established in the Halogenated Solvent Cleaning rule is sufficient to conclude that ''no adverse environmental effects,'' as defined in CAA section 112(a)(7), are associated with the emissions from these sources. After considering all of these health risk measures and factors in this action, we are again concluding that the risks associated with the 1994 NESHAP are acceptable.

TABLE 1—ESTIMATED BASELINE CANCER RISK, POPULATION RISK DISTRIBUTION, AND ESTIMATED NUMBER OF FACILITIES AT VARIOUS RISK LEVELS USING NEI 2002 DATA: SCALED TO NATIONAL LEVEL—ALL HALOGENATED SOLVENT CLEANING FACILITIES

Cancer risk results	Baseline no control
Estimated maximum individual lifetime cancer risk (per million) [1]	100
Estimated annual cancer incidence [2]	0.55
Estimated lifetime cancer risk (per million) # persons	
	100
≥ 10 to < 100	82,000
≥ 1 to < 10	8,000,000
Total Pop ≥ 1	8,082,100
Total Population Living within 50 km of any Halogenated Solvent Cleaner	200,000,000
Estimated lifetime cancer risk (per million) # facilities	
	9
≥ 10 to < 100	86
≥ 1 to < 10	394
< 1 (only carcinogen emitters)	802
< 1 (including sources emitting non-carcinogens) [3]	1,411
Estimated total number of facilities [4]	1,900

[1] Estimated maximum individual lifetime cancer risks are rounded to one significant figure.
[2] Estimated annual cancer incidence and population counts have been rounded to two or three significant figures where appropriate.
[3] Includes facilities with cancer risk < 1 plus 609 (346 scaled up) of the Year 2002 facilities that emit only the non-carcinogen 1,1,1-trichloroethane (TCA).
[4] Represents the total number of facilities in this category. This facility count should equal the sum of facilities with any MIR greater than or equal to 1 and the number of facilities with less than 1 (including sources emitting non-carcinogens).

B. Decision on Ample Margin of Safety

Petitioners raised a number of issues related to the approach and information that we used in making the ample margin of safety determination in the Halogenated Solvent Cleaning rule. In the following sections we summarize and address these issues. In addition, the following sections present regulatory options that we are proposing in this action, as well as health information, cost information, and other relevant factors that support an ample margin of safety analysis for those options. Finally, this section provides reasons why EPA might choose one option over another in our final action.

1. What is the approach used in making the ample margin of safety determination?

Petitioners raised a number of issues pertaining to EPA's overall approach to conducting ample margin of safety analyses and making ample margin of safety determinations, and we address these issues in this section of the preamble. The petitioners also raise a number of points directed at EPA's obligations and discretion under the CAA, as well as our exercise of those obligations and that discretion. Issues raised by petitioners that pertain to more specific topics or analyses related to our ample margin of safety determination are addressed later in this notice.

Several petitioners contend that our finding for facilities that manufacture narrow tubing that the 1994 NESHAP provides an ample margin of safety to protect public health is arbitrary and capricious because it rests on an ''erroneous assumption that the MIR from (narrow tubing) facilities is 70-in-1 million'' given that PADEP risk data indicated risks of 160-in-1 million associated with the same facilities in the Collegeville, PA area. As discussed in the previous section, we believe that the PADEP risk assessment is in error, and instead rely on our estimated baseline MIR for the narrow tubing industry of 70-in-1 million. One petitioner also contended that ''(d)espite the principle articulated by EPA in the Benzene NESHAP that residual risk standards

should 'protect the greatest number of persons possible to an individual lifetime risk level no higher than approximately 1-in-1 million,' '' the Halogenated Solvent Cleaning rule failed to demonstrate that it reduced risk in this manner. Petitioners further claim that consideration of cost-effectiveness of controls in making an ample margin of safety finding is unlawful and does not conform to the Benzene NESHAP approach. For example, one petitioner stated that ''EPA claims that 'incremental' reductions in risk that would result from the 40,000 kg/yr instead of the 60,000 kg/yr are not cost-effective.'' Petitioners argue that cost and cost-effectiveness are different concepts and CAA section 112(f)(2)(B) does not contemplate basing the ample margin of safety analysis on cost-effectiveness. The petitioner stated that EPA's reliance on cost-effectiveness changes the inquiry from whether the residual risk standards provide an ample margin of safety to protect public health, as intended by Congress, to a far more discretionary inquiry of whether controls measures are cost-effective.

Petitioners claim that CAA section 112(f)(2)(B) does not contemplate basing the ample margin of safety analysis on cost-effectiveness, suggesting that EPA inappropriately and impermissibly considered cost-effectiveness as well as incremental cost-effectiveness (as opposed to just cost) in making our ample margin of safety determination.

EPA disagrees with the petitioners and contends that the CAA contemplates consideration of cost-effectiveness in ample margin of safety determinations. The Benzene NESHAP, which is incorporated into CAA section 112(f)(2) by reference, explains that in the second step of the ample margin of safety analysis we consider all of the health risks and other health information considered in the first step—determining what level of risk is acceptable. The Benzene NESHAP goes on to explain that in the second step; in the ample margin of safety decision, we consider additional factors relating to the appropriate level of control, including costs and economic impacts of controls, technological feasibility, uncertainties and other relevant factors. To reiterate, in the second step of the ample margin of safety determination, we adopt standards at the level that provides an ample margin of safety to protect public health. That level may be equal to or more stringent than the acceptable risk level. The EPA's authority to consider such factors was affirmed in *NRDC* v. *EPA*, 529 F.3d. 1077, 1083 (D.C. Cir. 2008), which stated:

> * * * subsection 112(f)(2)(B) expressly incorporates EPA's interpretation of the Clean Air Act from the Benzene standard, complete with a citation to the **Federal Register**. In that rulemaking, EPA set forth its standard for benzene ''at a level that provides an 'ample margin of safety' in consideration of all health information * * * as well as other relevant factors *including costs and economic impacts,* technological feasibility, and other factors relevant to each particular decision.'' 54 FR 38045. (Emphasis in original).

In discussing the second step of the ample margin of safety analysis in the Benzene NESHAP, the EPA stated that other relevant factors, aside from cost and feasibility, could include, but are not limited to, impact on the national economy, small business impacts, cost-effectiveness, incremental cost-effectiveness, or net benefits. Indeed, with regard to the consideration of cost-effectiveness and incremental cost-effectiveness, the Benzene NESHAP states that:

> Because the court (in Vinyl Chloride) has specifically sanctioned the consideration of costs as well as feasibility of controls, it is clear that Vinyl Chloride does not require imposition of the maximum feasible controls without regard to cost or effectiveness. (54 FR 38057).

The EPA further stated in the Benzene NESHAP that:

> * * * EPA concluded that all the relevant health, technological and economic information should be considered in making the ample margin of safety decision. Accordingly, EPA rejects the position that the maximum feasible control technologies should be applied in all cases and accepts the position that an analysis of incremental risk reduction benefits versus incremental costs of additional controls be performed to help determine if additional control is warranted. (54 FR 38061).

Based on the foregoing, the EPA can consider, among other things, cost-effectiveness and incremental cost-effectiveness in the second step of the ample margin of safety decision.

Petitioners contend that even if CAA section 112(f)(2)(B) allows for consideration of cost-effectiveness, the EPA failed to provide a reasoned explanation supporting its cost conclusions in the Halogenated Solvent Cleaning rule. In particular, the petitioners argue that the EPA has not explained why the cost and cost-effectiveness values estimated by the EPA for options that were assessed in the rule, but ultimately rejected, were unacceptable. Petitioners also contend that in the past the EPA has promulgated other rules where estimates of cost or cost-effectiveness are within the range of those for options rejected in the Halogenated Solvent Cleaning rule. For example, Petitioners assert that a $3,600/ton cost-effectiveness is well within range of cost-effectiveness that the EPA has found acceptable in the past for less toxic pollutants. Petitioners also question why a cost-effectiveness of $3,400/ton and $2,000/ton for facilities that use continuous web cleaning machines and aerospace manufacturing and maintenance facilities, respectively, is not reasonable. Petitioners further contend that a cost-effectiveness of $520/ton and annualized costs of $1.2 million for the proposed 25,000 kg/yr MC equivalent limit and $74/ton and annualized costs of $130,000 for the proposed 40,000 kg/yr MC equivalent limit are well within the range of costs the EPA has found acceptable in the past. Some petitioners also contend that the EPA failed to calculate costs of 30 percent TCE reduction as indicated in response to comments at proposal by one facility that manufactures narrow tubing.

The EPA's rationale supporting its ample margin of safety decision was set forth in the Halogenated Solvent Cleaning rule. Consistent with the Benzene NESHAP, after determining that risks were acceptable, the EPA weighed the health information evaluated in the acceptability determination and other relevant factors as specified in the Benzene NESHAP to determine the appropriate level of control to provide an ample margin of safety (e.g., see excerpts from the EPA's analysis in the Halogenated Solvent Cleaning rule, below). As noted above, the Benzene NESHAP is inherently and necessarily flexible regarding what factors the EPA might consider, and how they might be weighed, in our ample margin of safety analysis, stating that ''* * * EPA believes the relative weight of the many factors that can be considered in selecting an ample margin of safety can only be determined for each specific source category. This occurs mainly because technological and economic factors (along with the health-related factors) vary from source category to source category.'' (54 FR 38061).

Concerning the petitioners' assertion that the EPA did not explain why the magnitude of certain cost and cost-effectiveness values that supported the EPA's decision were unacceptable, and the petitioner's contention that these values are in fact similar to values estimated for other pollutants in previous rulemakings, the EPA affirms that we conducted our analysis in

accordance with the framework established in the Benzene NESHAP. With regard to comparing cost or cost-effectiveness values to values in past rules, the EPA points out that the Benzene NESHAP specifically discourages such a practice: ''(EPA) does not intend to use 'bright-line' cost-effectiveness ratios to make the ample margin of safety decision but rather will consider such information with all the other relevant information available for this decision.'' (54 FR 38061). Further, as explained above, the Benzene NESHAP provides that the ample margin of safety analysis is a category-specific determination (''the relative weight of the many factors that can be considered in selecting an ample margin of safety can only be determined for each specific source category'') reflecting the consideration of a number of factors, all of which may be weighed differently for different source categories such that comparisons of the magnitudes of factors are rendered meaningless.

The EPA also clearly explained how we determined ample margin of safety and why the minimal risk reductions achieved by the options we ultimately rejected in the Halogenated Solvent Cleaning rule did not warrant the disproportionate costs. For example, in addition to other detailed results, we stated in the Halogenated Solvent Cleaning rule that:

> The finding regarding an 'ample margin of safety' is based on a consideration of the relatively small reductions in health risks likely to result from the feasible emission reductions we evaluated, the additional costs required to achieve further control, the lack of technically feasible control options for these sectors, and the time required to comply with any requirements. (72 FR 25146)

and

> Therefore, we believe that a requirement for these facilities to meet a 100,000 kg/yr MC equivalent emission limit is technically feasible, provides an annual and long-term cost savings, provides an ample margin of safety to protect public health and prevents adverse environmental effects. (72 FR 25145)

and

> After considering revisions to the risk and cost estimates presented at proposal, we believe that the 60,000 kg/yr MC equivalent emission limit for those halogenated solvent cleaning machines not identified as being in use by one of the four sectors discussed in section II, above, protects public health with an ample margin of safety and prevents adverse environmental effects. Specifically, the 60,000 kg/yr level reduces 90 percent of the HAP emissions reduced at the 40,000 kg/yr level. The 60,000 kg/year emission limit achieves reductions in MIR and cancer incidence that are similar to those expected at the 25,000 kg/yr and 40,000 kg/yr emission levels. The incremental reduction in emissions with a 40,000 kg/yr level instead of 60,000 kg/yr imposes an incremental cost of $1.5 million per year. The incremental cost per ton of this reduction is roughly $9,000/ton.
>
> Moreover, in comparing the 40,000 kg/yr and the 60,000 kg/yr emission limits, the incremental cost per cancer case avoided, $73 million/case, is substantial, supporting our conclusion that the $60,000 kg/yr emission limit provides an ample margin of safety consistent with the Benzene NESHAP. (72 FR 25145)

Moreover, contrary to the petitioners' claims, an analysis such as the one we provided in the Halogenated Solvent Cleaning rule is consistent with, and more comprehensive than, similar analyses presented in the Benzene NESHAP. For example, one ample margin of safety analysis in the Benzene NESHAP offered the conclusion that:

> * * * this control option will reduce benzene emissions by 70 to 90 Mg/yr, which represents less than an additional one percent reduction over the uncontrolled level. The cost of this additional emission reduction (and consequent risk reduction) would be about $200,000/yr (1982 dollars). While this additional cost is small, it is disproportionately large in comparison to the small additional emission and risk reduction achieved. (54 FR 38050)

While it is ultimately irrelevant (for the reasons stated above), the EPA notes that annualized costs rejected in the Benzene NESHAP itself—$200,000 per year in 1982 dollars, or approximately $430,000 [19] per year in 2007 dollars—are even less than the cost estimates for options that the EPA rejected that are cited by the petitioners (e.g., see above where the petitioner cites $600,000; $630,000, and $700,000 per year).

Petitioners cite to the Benzene NESHAP, arguing ''that residual risk standards should 'protect the greatest number of persons possible to an individual lifetime risk level no higher than approximately 1-in-1 million.' '' Petitioners focus, however, on one facet of the Benzene NESHAP in isolation, without accounting for the fact that the EPA evaluates various factors as part of the ample margin of safety determination. Specifically, the Benzene NESHAP states that ''* * * EPA strives to provide maximum feasible protection against risks to health from hazardous air pollutants by (1) protecting the greatest number of persons possible to an individual lifetime risk level no higher than approximately 1 in 1 million and (2) limiting (maximum individual risk, the MIR) to no higher than approximately 1 in 10 thousand * * *'' (54 FR 38044–38045). The Benzene NESHAP continues with an explicit statement that

> ''(i)mplementation of these goals is by means of a two-step standard-setting approach'' (54 FR 38045), which the notice explains further in greater detail. As described in this preamble (and in the Halogenated Solvent Cleaning rule), the EPA has implemented the two-step standard-setting approach to achieve these goals. As an additional note, the EPA points out that the Benzene NESHAP is unambiguous that ''* * * it is clear that * * * (the court) does not require imposition of the maximum feasible controls without regard to cost or effectiveness'' (54 FR 38057).

Petitioners further claim that category-wide residual risk standards must be set for the entire source category, but that the EPA's rule exempted certain machines. First, the EPA would like to reiterate that we did not ''exempt'' machines in our Halogenated Solvent Cleaning rule. The EPA implemented the statutorily-mandated two-step Benzene NESHAP framework and ultimately re-adopted the 1994 NESHAP for certain segments of the source category. Our authority to re-adopt the NESHAP in our residual risk rulemaking was recently affirmed by the United States Court of Appeals for the District of Columbia Circuit in *NRDC* v. *EPA, 529 F.3d 1077* (D.C. Cir. 2008). In that case, the court stated that ''If EPA determines that the existing technology-based standards already provide an 'ample margin of safety,' then the agency is free to readopt those standards during a residual risk rulemaking.'' In this rule, we have adhered to the two-step approach set forth in the Benzene NESHAP, and we are proposing a range of regulatory options.

2. Overview of Options Examined

Similar to the approach taken in our August 2006 Proposal and discussed in the Halogenated Solvent Cleaning rule, we have evaluated a range of regulatory options and have assessed the residual risk reductions that could be achieved if post-MACT HAP emissions were controlled further. These options incorporate MC equivalent based emission limits because we continue to believe that such emission limits (e.g., as promulgated in the Halogenated Solvent Cleaning rule that is the subject of this reconsideration) may provide an opportunity for additional risk reduction. These options were derived from information on the availability and feasibility of specific emission control technologies or practices, and are expressed as maximum facility-wide

[19] Escalation in costs is calculated using the CPI–U (*ftp://ftp.bls.gov/pub/special.requests/cpi/cpiai.txt*).

emission limits and requirements that would apply to the total emissions from all of a facility's solvent cleaning machines that are subject to the 1994 NESHAP. This proposal also reflects our investigations of information received subsequent to promulgation of the Halogenated Solvent Cleaning rule and our belief based on that information that certain emission limits could be achieved through both solvent switching and traditional technologies and practices for some sectors of the category. We have produced additional risk and cost analyses to support the evaluation of these proposed regulatory options.

We recognize that some commenters may either endorse aspects of one or more of the proposed regulatory options or advocate for a combination of the options in ways other than presented in this proposal. Specifically, comments that we receive may lead us to conclude that the most appropriate regulatory approach would be one that combines sector-specific alternatives from different options. This proposal seeks to allow such an approach by providing the risk (Table 3, section III) and cost (Table 5, section III) estimates that correspond to each of the sector-specific alternatives that make up the broader options (Options 1, 2, and 3) we are proposing. The estimated risk reductions and associated costs for Options 1, 2 and 3 are presented in Tables 2 and 4 below. This approach differs from our August 2006 Proposal where we explicitly solicited comments on only two co-proposed options, although we had also developed six emission levels to evaluate reductions in residual risk if post-MACT emissions (i.e., baseline emissions) were controlled further from this source category. Thus, we are soliciting comments on options 1 through 3, and any combination of the proposed sector-specific options identified in this proposal. Our decision on the final regulatory approach will reflect the comments we receive. The options are summarized below:

i. Proposed Option 1

A 60,000 kg/yr MC equivalent limit would be applicable to sources associated with the general population of halogenated solvent cleaning machines. A 100,000 kg/yr MC equivalent limit would be applicable to halogenated solvent cleaning machines located at military maintenance and depot facilities. With respect to facilities that use continuous web cleaning machines, halogenated solvent cleaning machines used by facilities that manufacture narrow tubing, and halogenated solvent cleaning machines used by aerospace manufacturing and maintenance facilities, we are proposing to re-adopt the 1994 NESHAP under CAA section 112(f)(2) because we are proposing that the current level of control called for by the 1994 NESHAP reduces HAP emissions to levels that present an acceptable level of risk, provide an ample margin of safety to protect public health, and prevent any adverse environmental effects. (This option represents the standards promulgated in the Halogenated Solvent Cleaning rule.)

ii. Proposed Option 2

A 60,000 kg/yr MC equivalent limit would be applicable to sources associated with the general population of halogenated solvent cleaning machines and halogenated solvent cleaning machines used by facilities that manufacture narrow tubing. A 100,000 kg/yr MC equivalent limit would be applicable to halogenated solvent cleaning machines located at military maintenance and depot facilities. With respect to facilities that use continuous web cleaning machines, and halogenated solvent cleaning machines used by aerospace manufacturing and maintenance facilities, we are proposing to re-adopt the 1994 NESHAP under CAA section 112(f)(2) because we are proposing that the current level of control called for by the 1994 NESHAP reduces HAP emissions to levels that present an acceptable level of risk, provide an ample margin of safety to protect public health, and prevent any adverse environmental effects.

iii. Proposed Option 3

A 60,000 kg/yr MC equivalent limit would be applicable to sources associated with the general population of halogenated solvent cleaning machines and halogenated solvent cleaning machines used by facilities that manufacture narrow tubing. A 100,000 kg/yr MC equivalent limit would be applicable to halogenated solvent cleaning machines used by aerospace manufacturing and maintenance facilities and halogenated solvent cleaning machines located at military maintenance and depot facilities. Facilities that use continuous web cleaning machines that exceed 60,000 kg/yr MC equivalent HAP emissions would have to achieve 80 percent overall control efficiency for those units.

3. How Did the EPA Establish the Proposed Regulatory Options?

This section describes our determination that the above proposed regulatory options are technically feasible. Additionally, section III discusses human health risks and costs associated with these options. Similar to our August 2006 Proposal and our May 3, 2007 final rule, we have also re-examined and re-evaluated the impacts to small businesses associated with the alternative emission limits based on supporting information from the Halogenated Solvent Cleaning rule (contained in the docket for that rule) and information we received after promulgation of the Halogenated Solvent Cleaning rule. Our discussion of the small business impacts of this action are presented in section VI of this preamble.

Several petitioners contend that we did not evaluate all of the control options provided in response to our August 2006 Proposal and subsequent NODA. However, the EPA did carefully evaluate specific comments from commenters on costs, on results, on technical compatibility with products and technical feasibility. While commenters identified specific control options, most indicated implementing such controls were not feasible because of physical limitations of the facility or the proposed compliance timeframes.

Petitioners also provided information indicating that certain manufacturers in the narrow tube industry, after the close of the comment period for our August 17, 2006 proposal, either instituted or began planning the installation of various control measures that would have achieved the emission limitations that the EPA co-proposed in August 2006 and contend that this information was of central relevance to the outcome of the Halogenated Solvent Cleaning rule. Petitioners further contend that we excluded available alternative control measures without providing an explanation in the Halogenated Solvent Cleaning rule, that we frequently set technology-forcing standards, and that recognizing the responses by the affected industries regarding compliance difficulty is not an excuse for our failure to set a standard. In the May 3, 2007 rule, the EPA set a final standard according to section 112(f)(2) and 112(d)(6) and provided explanations for that final standard. In response to the petitioners comment on setting technology-forcing standards, the EPA is bound by CAA section 112(f)(2) to make an ample margin of safety decision according to the Benzene NESHAP and not to extend this authority in setting technology-forcing standards. In summary, petitioners contend that the requirements promulgated in the Halogenated Solvent Cleaning rule were not a logical

outgrowth of the August 2006 Proposal and December 2006 NODA.

As part of this reconsideration effort, we have re-analyzed our conclusions on risk, cost, technical feasibility, and compliance deadlines made in the Halogenated Solvent Cleaning rule. In this action and in response to the petitions we reassessed the regulatory options for halogenated solvent cleaning machines used by facilities that manufacture narrow tubing, aerospace manufacturing and maintenance, military maintenance and depot facilities, facilities that use continuous web cleaning machines, and for all other halogenated solvent cleaning machines that are not included in these named sectors.

This proposal is based on supporting data and information from the Halogenated Solvent Cleaning rule (contained in the docket for that rule) and data and information received since promulgation of the Halogenated Solvent Cleaning rule. Data and information received since promulgation of the Halogenated Solvent Cleaning rule indicates the availability of control measures that would enable certain facilities in the narrow tube industry and certain facilities that use continuous web cleaning machines to achieve HAP emission reductions that we did not believe feasible when we finalized the Halogenated Solvent Cleaning rule. In some cases, this proposal reflects a re-evaluation of the information on availability of control measures that we received in response to both the August 17, 2006 proposal and subsequent NODA, in light of information that we received since we promulgated the Halogenated Solvent Cleaning rule.

As in the final Halogenated Solvent Cleaning rule, today's proposal recognizes that certain facilities might be able to use control measures that include retrofit technologies, such as a carbon adsorption device (CAD), and vacuum-to-vacuum machines, switching from HAP to non-HAP solvents, such as n-propyl bromide (nPB), changes to the manufacturing process, and instituting emission reduction programs. Further, this proposal recognizes and reflects the differences between facilities that use continuous web cleaning machines and batch cleaning machines, and acknowledges comments on the August 2006 Proposal and subsequent NODA indicating that control efficiency requirements rather than straight emission limits are a preferable approach for expressing emission limitations for facilities that use continuous web cleaning machines because continuous web cleaning machines must control emissions at both entry and exit points. These comments from some facilities that use continuous web cleaning machines suggested that their emission capture systems could be modified within a 3-year period to achieve an 80 percent overall control efficiency, over uncontrolled emission levels. Control efficiency requirements rather than straight emission limits are a preferable approach for expressing emission limitations for facilities that use continuous web cleaning machines, which is the same conclusion that we made in the final Halogenated Solvent Cleaning rule. In this action, we also are soliciting comments on whether CAD or emission capture systems operating at high efficiency would provide an opportunity for facilities that use continuous web cleaning machines to control up to 80 percent of their emissions. We note that although the final Halogenated Solvent Cleaning rule also considered, but ultimately rejected, such an option, the option in today's proposal (described in more detail below) would restrict this requirement to facilities emitting over 60,000 kg/yr MC equivalent HAP emissions.

i. Narrow Tube Manufacturing Facilities

Petitioners contend that we failed to consider and evaluate various compliance options for the facilities that manufacture narrow tubing despite responses and comments we received on both our August 17, 2006 proposal and NODA. Specifically:

- Petitioners cite comments and responses to both the August 17, 2006 proposal and the subsequent NODA from several facilities that manufacture narrow tubing indicating the likelihood of 25 percent TCE emission reductions through installation of CAD and a capture and control system. The EPA considered this comment in our final rule (see 72 FR 25154) and concluded that while reductions may be obtained, the industry, through their comments, was unable to research, design and implement the necessary technological controls within the compliance period and the EPA's proposed costs.
- Petitioners cite responses by various facilities that manufacture narrow tubing indicating an ability to achieve emission reductions ranging from either 25–35 percent or 50–95 percent through installation of emission control devices and changes in production processes. The EPA considered this comment in developing our final rule and concluded that while reductions may be obtained through solvent switching and installation of controls, the narrow tube manufacturing industry, through their comments, indicated that there was inadequate research available to the industry to warrant solvent switching. They indicated the research, design and implementation could not be accomplished within the EPA's proposed compliance period and would exceed the EPA's proposed costs.
- Petitioners also cite responses indicating the ability of one particular facility to reduce TCE emissions from 68.4 tons per year (tpy) to 52 tpy. The EPA considered this comment in developing our final rule (see 72 FR 25154) and concluded that the industry, through their comments, was unable to research, design and implement the necessary technological controls within the compliance period and EPA's proposed costs. Petitioners further argue that we should have investigated the feasibility of establishing a 100,000 kg/yr MC equivalent emission limit given the response of one facility that manufactures narrow tubing indicating the ability to meet this level within five years of promulgation. The EPA did not develop this option for two reasons: First, Congress limits the EPA's ability to impose compliance periods that exceed three years, and, second, the industrial sector commented that they simply could not implement the necessary technology within the 3-year compliance period permitted by Congress and within the cost parameters the EPA assumed in the August 17, 2006 proposal.

Subsequent to promulgation of the Halogenated Solvent Cleaning rule, Petitioners provided information to the EPA indicating that this industrial sector may, in fact, be capable of complying with the co-proposed limits in our August 17, 2006 proposal within the 3-year compliance period provided in the Halogenated Solvent Cleaning rule. Petitioners also provided information indicating that subsequent to the close of the comment period of the Halogenated Solvent Cleaning rule various facilities that manufacture narrow tubing either installed control devices or were in advanced planning stages to install control devices that would enable them to achieve either of our August 17, 2006 co-proposed emission limits. Specifically, subsequent to promulgation of the Halogenated Solvent Cleaning rule, one facility that manufactures narrow tubing has installed vacuum-to-vacuum machines. Two other facilities that manufacture narrow tubing have switched from solvent HAP to a non-HAP, nPB. One of these two facilities also indicated an ability to achieve eight

percent and 22 percent TCE emission reductions through reconfiguration of two flush degreasers and use of reformulated materials, respectively.[20] Petitioners also provided information indicating that the other of the two facilities was in advanced installation stages for CAD and a capture and control system that would likely achieve 30 percent TCE reduction. This information and supporting documentation have been placed in the docket for this rulemaking.

As explained earlier, our August 17, 2006 proposal would have required all owners and operators of all halogenated solvent cleaning machines to comply with either 25,000 kg/yr or 40,000 kg/yr MC equivalent facility-wide emission limit. We assumed compliance with these limits could be achieved by installation of control technologies, such as vacuum-to-vacuum machines and CAD, and switching solvents, either from PCE to TCE or TCE to MC. We also assumed compliance would be achieved through retrofit technologies such as freeboard ratios, working mode covers and freeboard refrigeration devices. In commenting on our August 17, 2006 proposal, various facilities that manufacture narrow tubing indicated that further HAP control that would be required by the co-proposed standards would likely be achieved only through installation of expensive technology, and that such technologies had yet to be proven either effective or reliable for their manufacturing processes. They also expressed concerns over the proposed compliance period. Additionally, several facilities that manufacture narrow tubing that use PCE indicated that solvent switching was an unsuitable compliance option because they were bound to their customers' procedural requirements for the higher vapor temperature of PCE and thus, that both TCE and MC, which have lower vapor pressure temperature, would be inadequate for proper cleaning. Although some facilities that manufacture narrow tubing indicated the possibility of switching solvents from TCE to nPB, they also stated that it had yet to be proven as a degreaser and thus, had yet to be approved as an alternative solvent by many original equipment manufacturers. They further indicated that such approval processes would likely be beyond the proposed 2-year compliance period. Some facilities that manufacture narrow tubing also described their halogenated solvent cleaning machines as unique due to their large size and capacity and indicated the non-availability of vacuum-to-vacuum machines as a result.

As explained above, subsequent to our evaluation of these comments, we issued a NODA that requested additional information on costs, compliance deadlines and technical feasibility for halogenated solvent cleaning at facilities that manufacture narrow tubing. In response, most facilities that manufacture narrow tubing reiterated and expanded upon the reasons why they were unable to comply with the 25,000 kg/yr and 40,000 kg/yr MC equivalent co-proposed limits due to technological factors, costs and compliance deadline constraints. The facilities that manufacture narrow tubing did, as noted by the petitioners and described at the beginning of this section, outline those emission reduction measures they believed they could achieve. Because we were persuaded by their assertions, we found, after re-evaluating risks, associated compliance costs and availability of control measures, that the 1994 NESHAP both reduces risk to acceptable levels and provides an ample margin of safety to protect public health for halogenated solvent cleaning machines used by facilities that manufacture narrow tubing. In the final Halogenated Solvent Cleaning rule the EPA also considered, but ultimately rejected in our ample margin of safety analysis, a compliance option that would have required a 10 percent reduction in HAP emissions from facilities that manufacture narrow tubing. We believed this reduction could feasibly be achieved by facilities that manufacture narrow tubing within the compliance period through installation of side chambers, however the estimated risk reductions were small in comparison to the cost.

We are now aware, however, that since promulgation of the Halogenated Solvent Cleaning rule, at least four out of 17 facilities that manufacture narrow tubing have either implemented or instituted plans to install control measures and HAP reduction techniques that would likely achieve either of the August 17, 2006 co-proposed limits, *i.e.*, 25,000 kg/yr and 40,000 k/yr MC equivalent limits. These control measures and HAP emission reduction techniques have been implemented within the compliance period—which earlier comments by the facilities indicated was not possible—and include:

- Installing CAD and vacuum-to-vacuum machines (installed by the facilities that manufacture narrow tubing that indicated uniqueness of their halogenated solvent cleaning machines due to size, in their comments on the August 17, 2006 proposal),
- Switching to nPB (a non-HAP solvent), and
- Manufacturing process changes such as cleaning smaller bundles of tubes and/or allowing product to remain in the machine for a longer duration to allow complete condensation of the solvent vapors before removal.

These accomplishments are applauded by the EPA, yet appear to be in direct conflict with the comments submitted on the August 17, 2006 proposal and subsequent NODA.

We are also aware that at least four facilities would not need to install any additional controls in order to comply with these proposed regulatory options. The remaining nine facilities continue to use HAP solvents and operate in accordance with the 1994 NESHAP. We believe the techniques and technologies employed by the four facilities that manufacture narrow tubing may be used by the remaining facilities to achieve further emission reductions to comply with the emission limit of 60,000 kg/yr MC equivalent.

In light of the information that was otherwise not available to the EPA at the time of promulgation of the Halogenated Solvent Cleaning rule, we have reviewed and revised our conclusions on technical feasibility, the compliance deadline and compliance costs associated with meeting the August 17, 2006 co-proposed limits. With the activities completed by these facilities that manufacture narrow tubing, we believe that the remaining facilities that manufacture narrow tubing nationwide, most with lower total emissions than the facilities mentioned above, could achieve reductions in emissions within a 2-year compliance period and at a potentially reasonable cost. Therefore, as discussed in section III of this Preamble, we are proposing two regulatory options that would be applicable to halogenated solvent cleaning machines in use at facilities that manufacture narrow tubing. We are soliciting comments on the proposed regulatory options as they relate to facilities that manufacture narrow tubing.

ii. Aerospace Manufacturing and Maintenance Facilities

Petitioners contend that the Halogenated Solvent Cleaning rule does

[20] EPA notes that in this case the facility's permit does not identify a specific reformulated material that would be used to achieve 22 percent TCE emissions reduction. In addition, materials reformulation specified in the facility's permit could be implemented to reduce TCE emissions from an activity that is not in the source category addressed in today's notice.

not provide any explanation as to why vacuum-to-vacuum technology and retrofit technologies such as freeboard ratios, working mode covers and freeboard refrigeration devices cannot be used by aerospace manufacturing and maintenance facilities. One petitioner stated that there was no explanation for the rejection of vacuum-to-vacuum technology as a control option for aerospace manufacturing and maintenance facilities even though the Halogenated Solvent Cleaning rule indicated that such technology was in use by ''similar'' aerospace manufacturing and maintenance facilities.

In response to both our August 17, 2006 proposal, and subsequent NODA, aerospace manufacturing and maintenance facilities indicated an inability to comply with our co-proposed limits due to technical infeasibility, associated compliance costs and the limited proposed compliance deadline. Some facilities indicated a 5-year minimum compliance period would be required because they would need to investigate technology and protocol changes called for by the proposed 40,000 kg/yr MC equivalent limit. With regard to vacuum-to-vacuum technology, aerospace manufacturers indicated that vacuum-to-vacuum technology was extremely expensive and had not been proven effective or reliable for the operations at aerospace manufacturing and maintenance facilities. With regard to solvent switching, those aerospace manufacturing and maintenance facilities that use PCE stated that switching to either TCE or MC would be an unsuitable compliance option because of incompatibility issues and lower vapor pressure. Other facilities also stated that they may be able to switch from a HAP solvent to a non-HAP solvent such as nPB, but indicated that nPB solvent was untested in their industry. They also stated that changing solvents involved a rigorous approval process by the original equipment manufacturers and the Federal Aviation Administration in order to ensure that safety and quality criteria continue to be met and that such process would likely be beyond the 2-year proposed compliance deadline. We note, in general, that the bulk of comments indicated an inability to implement these control measures within the proposed 2-year compliance period at the costs presented in our August 17, 2006 proposal.

In the Halogenated Solvent Cleaning rule, we evaluated costs alone for the 60,000 kg/yr MC equivalent emission limit and both risks and costs for the 100,000 kg/yr and 250,000 kg/yr MC equivalent levels for aerospace manufacturing and maintenance, but rejected these options based on our conclusion that they were either not cost-effective or the costs were disproportionate given the emission reductions achieved. We also rejected these options because the industry strongly indicated necessary emission control actions could not be achieved within the compliance timeframe. Additionally, similar to the facilities that manufacture narrow tubing, we were persuaded by the industry's responses and information, and after our re-evaluation of compliance costs, technical feasibility and risks, we determined that the current level of control provided by the 1994 NESHAP for the aerospace manufacturing and maintenance industry both reduces HAP emissions to levels that present an acceptable risk and provides an ample margin of safety to protect public health.

Since receiving the petitions, we have re-evaluated our treatment of the responses to the NODA by aerospace manufacturing and maintenance facilities. Specifically, we have re-evaluated responses we received from various aerospace manufacturing and maintenance facilities indicating the availability of compliance options that include various work practices and installing larger or additional CAD systems, and vacuum-to-vacuum machines and switching from a HAP solvent to nPB. We have also learned that certain aerospace manufacturing and maintenance facilities are testing nPB as a compliance approach to HAP emission reductions. We currently do not have sufficient information that would allow us to conclude definitively that nPB switching is a viable compliance option for this industry primarily because we are aware of material compatibility concerns. Therefore, we do not believe that we can extrapolate the use of nPB by facilities that manufacture narrow tubing to the aerospace manufacturing and maintenance facilities. We have thus calculated compliance costs for the aerospace manufacturing and maintenance facilities using HAP solvent switching, retrofitting of machines, vacuum-to-vacuum machines and CAD using the same assigned costs used in the Halogenated Solvent Cleaning rule, which were based on costs provided in public comments. As discussed in section III of this preamble, we are proposing a range of regulatory options that would be applicable on a facility-wide basis for all halogenated solvent cleaning machines in use at aerospace manufacturing and maintenance facilities.

iii. Continuous Web Cleaning Machines [21]

Petitioners also allege that the EPA failed to provide any explanation as to why several alternative reduction measures, such as either vacuum-to-vacuum machines or solvent switching are not available control options for facilities that use continuous web cleaning machines.

As explained earlier, in response to both our August 17, 2006 proposal, and subsequent NODA, the EPA received significant comments from some facilities that use continuous web cleaning machines identifying numerous compliance issues presented by the co-proposed limits. Responses included that switching from either PCE or TCE to MC was not an available compliance option due to the fact that MC is incompatible with certain metals, and production processes, has a lower boiling point, and stringent worker safety OSHA requirements. Some facilities also indicated that installation of vacuum-to-vacuum machines was not a compliance option due to the differences between the continuous web cleaning process and other batch cleaning operations. They stated that the 1994 NESHAP, in recognition of these differences, prescribed compliance options for facilities that use continuous web cleaning machines that were different from other halogenated solvent cleaning machines. They requested that we set different compliance requirements that would be based on overall control efficiency rather than an emission limit, in light of the fact that they could not comply with either of the proposed emission limits in the August 2006 proposed rule. They maintained that attaining a degree of control rather than meeting an emission limit was a more appropriate measure of their emission reduction capability. They also indicated that they had installed CAD, which can operate at about 99 percent control efficiency, and that they could possibly achieve an overall effectiveness of 80 percent control efficiency (the

[21] Continuous web cleaners are a subset of in-line cleaners that are used to clean products such as films, sheet metal, and wire in rolls or coils. They are semi-enclosed, with emission points where the workload enters and exits the machine. Squeegee rollers reduce carry out emissions by removing excess solvent from the exiting workload. The workload is uncoiled and conveyorized throughout the cleaning machine at speeds in excess of 11 feet per minute and recoiled or cut as it exits the machine. Emission points are similar to emission points from other in-line cleaners. Also some continuous web machines have exhaust systems that are similar to those used with some in-line cleaners.

1994 NESHAP requires 70 percent overall control efficiency).

Similar to our treatment of comparable assertions by both facilities that manufacture narrow tubing and aerospace manufacturing and maintenance facilities, we were persuaded by these assertions, and in the Halogenated Solvent Cleaning rule, we acknowledged that continuous web machines are designed differently from general halogenated solvent cleaning machines, i.e., batch cleaning machines, and that it would be both technologically infeasible and cost prohibitive for facilities that use continuous web cleaning machines to comply with our final promulgated emission limits. Further, we determined that their control choices were limited to installation of CAD, but that CAD would be insufficient for purposes of complying with either the proposed or final promulgated emission limits because they would likely achieve only a 10 to 30 percent overall emission reductions in facility-wide emissions. 72 FR 25155. In our final Halogenated Solvent Cleaning rule we analyzed and discussed a regulatory alternative that would require 80 percent overall control efficiency for all facilities, but we ultimately concluded that for facilities that use continuous web cleaning machines the current level of control provided by the 1994 NESHAP both reduces HAP emissions to levels that present an acceptable risk and provides an ample margin of safety to protect public health.

Since promulgation of the Halogenated Solvent Cleaning rule, and receipt of the reconsideration petitions, we have also re-evaluated our assumptions on compliance options, and costs for additional emission reductions as it relates to facilities that use continuous web cleaning machines. In doing so, we have re-examined the comments submitted on the August 16, 2006 proposal and NODA, where some facilities that use continuous web cleaning machines indicated their preference for tighter control efficiency as compared to a straight emission limit and more specifically their comments that indicated the ability to achieve 80 percent overall control efficiency over uncontrolled emission levels within a 3-year compliance period. (These comments are in the docket for this rulemaking.) Facilities that use continuous web cleaning machines are currently required to achieve 70 percent overall control efficiency under the 1994 NESHAP.

This proposal reflects this re-evaluation and our belief that a relative reduction limit is more suitable than an emission cap for facilities that use continuous web cleaning machines. Under one of the regulatory options presented in this proposal, six facilities would be required to reduce emissions by 33 percent, i.e., $((1 - 70\%) - (1 - 80\%)/(1 - 70\%) = 33\%)$. To meet this proposed emission requirement, we assumed three facilities could switch their HAP solvent to nPB (based on the use of nPB in the narrow tubing industry). Based on the analysis we conducted to support the Halogenated Solvent Cleaning rule we also assumed that three facilities could install CAD or automated gates control to comply with the proposed option. Thus, as earlier discussed in section III of this preamble, we are proposing an option that includes an overall control efficiency of 80 percent for facilities that use continuous web cleaning machines that exceed a 60,000 kg/yr MC equivalent limit.

iv. Military Maintenance and Depot Facilities

Petitioners also contend that the EPA announced a final rule that dramatically departed from the proposed rule by imposing a 100,000 kg/yr MC equivalent limit for halogenated solvent cleaning machines used by military maintenance and depot facilities. Petitioners contend that the public was deprived of the opportunity to comment on this standard and on the technical, legal and policy rationale the EPA proffered in the Halogenated Solvent Cleaning rule.

In response to both our August 17, 2006 proposal and the NODA, military depot and maintenance facilities indicated an inability to comply with either co-proposed limits due to both technological and compliance deadline constraints. They indicated, however, an ability to comply with a 100,000 kg/yr MC equivalent limit. Persuaded by these responses, we determined that the 100,000 kg/yr MC equivalent limit for halogenated solvent cleaning machines used by military depot and maintenance facilities would provide an ample margin of safety in the Halogenated Solvent Cleaning rule.

Since promulgation of the Halogenated Solvent Cleaning rule, and receipt of the petitions, we have also re-evaluated our assumptions on compliance options, and costs for additional emission reductions as they relate to military maintenance and depot facilities. In this action, as discussed in section III above, for halogenated solvent cleaning machines used by military maintenance and depot facilities we are re-proposing the 100,000 kg/yr MC equivalent emission limit option that we finalized in the Halogenated Solvent Cleaning rule.

v. General Population of Halogenated Solvent Cleaning Machines

Petitioners stated that the 60,000 kg/yr MC equivalent level we promulgated for the general population of halogenated solvent cleaning machines was neither proposed nor made available for public comment. In reconsideration of the Halogenated Solvent Cleaning rule, we re-examined the proposed 40,000 kg/yr and promulgated 60,000 kg/yr MC equivalent levels of control for the general population, retaining the emission control assumptions (and thus the risk reduction and cost assumptions) used in the final rule. As in the Halogenated Solvent Cleaning rule, our evaluation is based on the 2002 NEI data.

Since promulgation of the Halogenated Solvent Cleaning rule, we have received no new information that would lead us to change the facts and conclusions we presented for either the 40,000 kg/yr MC equivalent level (which we rejected in the Halogenated Solvent Cleaning rule) or the 60,000 kg/yr MC equivalent level. Therefore, in this action we are proposing a 60,000 kg/yr MC equivalent emission limit as a regulatory option for the general degreasing units.

4. Health Information for the Proposed Options

As previously mentioned, we have performed additional risk assessments for this source category since the final rule was promulgated. In this section, we provide estimates of the health risk reductions achieved by each of the proposed regulatory options for each of the industry sectors. The estimates were derived using the same analytical methodologies which were used to derive the estimates for the Halogenated Solvent Cleaning rule, with two exceptions: (1) The health risk estimates were derived explicitly (rather than extrapolated, as was done for the Halogenated Solvent Cleaning rule) for each industrial sector as well as for the total population of facilities; and, (2) in addition to our use of the CalEPA chronic REL for TCE, a chronic non-cancer air criterion developed by the NYS DOH was used to characterize non-cancer risks for TCE.

While health risks were estimated using both the 1999 NEI and the 2002 NEI, we only present those derived using the more recent emission inventory data. Additional details and results are provided in the docket for this rule.

Table 2 presents a summary of cancer risk results for the entire source category at baseline levels and for each of the proposed control options, indicating both how the maximum individual cancer risk level and the population within various individual risk ranges vary from option to option. It also shows the projected emission reductions and cancer incidence levels associated with each option, as well as the estimated maximum non-cancer target organ-specific HI values (indicated as a range, depending on which chronic reference value is used in the calculation). We note specifically that the range of exposures (as indicated by the HI values) for the baseline and Option 1 scenarios are near the exposure level where we can say that there is no appreciable risk of non-cancer health effects (see previous discussion in this section). We believe that this result does not indicate that there should be concern; rather, we believe it is indicative of the range of values associated with the chronic non-cancer toxicity of TCE. We also note that using the CalEPA REL there are no facilities with an HI above 1; however, using the NYS DOH air criterion, which incorporates a significant degree of conservatism in its final estimate, the only HAP contributing to non-cancer HI values above 1 becomes TCE. The target organ system which is most sensitive for both the CalEPA REL and the NYS DOH air criterion is the central nervous system, with symptoms including dizziness, drowsiness, and confusion at high enough exposures. Effects to the liver and immune systems have also been observed in people at high enough TCE exposures.

In response to one petitioner's assertion that the Halogenated Solvent Cleaning rule omitted an analysis of the population exposed to lifetime cancer risks greater than 1-in-1 million, Table 1, above, presents updated estimates of this information from the Halogenated Solvent Cleaning rule while Table 2, below, provides population risk information relevant to the different proposed regulatory options that we are seeking comment on in this action.

TABLE 2—EFFECT OF THE PROPOSED OPTIONS ON RISK AND EMISSIONS

Options	Baseline	Option 1	Option 2	Option 3
MIR (in-1 million)	100	~50	~50	~50
>100 in-1 million *	100	0	0	0
≥10 to <100 in-1 million *	82,000	7,500	6,600	5,700
≥1 to <10 in-1 million *	8,000,000	2,100,000	2,087,500	1,946,500
Emissions Reduced (tons/yr)	0	1,681	2,601	3,188
Emissions Remaining (tons/yr)	4,200	2,535	1,615	1,028
Maximum Non-cancer HI	0.2–7.0	0.2–2.0	0.05–1.0	0.05–1.0
Cancer Incidence (cases/yr)	0.55	0.36	0.35	0.32

* Number of people in the specified risk range

Option 1: 60,000 kg/yr MC equivalent applicable to general population of halogenated solvent cleaning machines and 100,000 kg/yr MC equivalent for halogenated solvent cleaning machines in use at military maintenance and depot facilities.

Option 2: 60,000 kg/yr MC equivalent applicable to facilities that manufacture narrow tubing and general population of halogenated solvent cleaning machines and 100,000 kg/yr MC equivalent for halogenated solvent cleaning machines in use at military maintenance and depot facilities.

Option 3: 60,000 kg/yr MC equivalent applicable to general population and facilities that manufacture narrow tubing; 100,000 kg/yr MC equivalent applicable to aerospace manufacturing and maintenance facilities and military maintenance and depot facilities; and 80 percent overall control efficiency for facilities that use continuous web cleaning machines that have emissions exceeding 60,000 kg/yr MC equivalent.

Table 3 presents a summary of cancer incidence, cancer incidence reduction, and emission reductions for the general population and for each of the industrial sectors discussed above, for each of the control options being considered.

TABLE 3—INCIDENCE AND EMISSIONS REDUCTIONS FOR THE SECTOR-SPECIFIC COMPONENTS OF OPTIONS 1, 2, AND 3

Industry group	Emission limit	Baseline incidence (cases/yr)	Incidence after control (cases/yr)	Cases avoided/ year	Tons reduced
General Degreaser Population (not in any other sector).	60,000 kg/yr	0.45	0.26	0.19	1,592
Narrow Tubing Manufacturing	60,000 kg/yr	0.02	0.007	0.013	920
Continuous Web Cleaning Machines (>60,000 kg/yr).	80 percent overall control efficiency.	0.03	0.02	0.01	263
Aerospace Manufacturing and Maintenance.	100,000 kg/yr	0.05	0.03	0.02	324
Military maintenance and depot	100,000 kg/yr	0.0003	0.0001	0.0002	89

After promulgation of the Halogenated Solvent Cleaning rule, we became aware that nPB, a non-HAP, had already been substituted for TCE in at least two facilities that manufacture narrow tubing and that it may be a suitable alternative solvent at other facilities. As a result, in this proposal we have assumed that nPB could and would be used in both the narrow tube manufacturing industry and facilities that use continuous web cleaning machines. Due to materials incompatibility, however, we do not believe we can extrapolate the use of nPB to the aerospace manufacturing and maintenance facilities. The HAP emission reductions, risk reductions, and costs projected under these's proposed regulatory options 2 and 3 rely, and are based, in part, on nPB substitution for TCE in a specific number of machines of specific sizes.

Although nPB is not a HAP, there are known adverse health effects from exposures to high levels of nPB, including effects on the nervous system (headaches, dizziness, nausea, numbness in the lower body) based on studies of exposed workers,[22] and effects on the liver and reproductive system based on animal tests.[23] In its review of the use of nPB as an alternative to using solvents which deplete stratospheric ozone (72 FR 30142, May 30, 2007), the EPA determined that nPB was an acceptable substitute in solvent cleaning applications, but recommended use of personal protective equipment and adherence to the capture and suppression guidelines in the NESHAP for halogenated solvent cleaning.[24] For example, emission controls previously used for MC or TCE should remain in place for worker safety and general public safety reasons.

In evaluating nPB in a specific use under the SNAP program, we evaluated the worst-case level of nPB emissions. We note that even though this worst-case emission level is higher, by at least a factor of 4, than the highest-emitting facility in the halogenated solvents category, the worst-case impact estimated under the SNAP program is still substantially below, by more than a factor of 10, the derived threshold for non-cancer effects. This leads us to conclude that the substitution of nPB for TCE and/or MC in halogenated solvent cleaners should not pose any health risks to the general population.

The SNAP final rule stated that for non-aerosol solvent cleaning, facilities should follow the guidelines in the NESHAP for halogenated solvent cleaning if they are using nPB. The equipment and procedural changes described in the NESHAP for halogenated solvent cleaning can reduce emissions, reduce solvent losses and lower the cost of cleaning with organic solvents.

Based on this information, we conclude that use of nPB to comply with the proposed emission limit is reasonable, and we recommend that those switching to nPB maintain use of their current emission controls for worker and general public safety. In this notice, we request comment on additional or new information which might suggest that this conclusion is incorrect.

5. Costs and Other Relevant Factors for the Proposed Options

As discussed earlier in sections I and III of this preamble, petitioners have raised several issues on our cost conclusions in the Halogenated Solvent Cleaning rule. Since promulgation of the Halogenated Solvent Cleaning rule, we have become aware of certain facilities that manufacture narrow tubing that have voluntarily investigated and instituted HAP emission reductions by installing CAD, vacuum-to-vacuum machines, switching from HAP solvents to a non-HAP solvent and reconfiguration and changing production processes.

Consequently, we have re-evaluated our conclusions on costs, availability of technology and the compliance deadline for the facility-wide limits in the Halogenated Solvent Cleaning rule. As earlier explained in this section, existing information now leads us to conclude, in a change from the Halogenated Solvent Cleaning rule, that certain affected sources in the narrow tubing industry can comply with the proposed limits and requirements through installation of CAD, vacuum-to-vacuum machines, switching from HAP to non-HAP and improved work practices and manufacturing process changes. In addition, we extrapolated information on compliance measures that we obtained for the narrow tubing industry sector to facilities that use continuous web cleaning machines. Specifically, we assumed that facilities that use continuous web cleaning machines could substitute TCE for nPB. As noted earlier, however, due to concerns over materials incompatibility, we do not believe we can extrapolate the information on the use of nPB by facilities that manufacture narrow tubing to aerospace manufacturing and maintenance facilities. Finally, our cost estimates do not reflect any new information on available HAP emission reduction options for both the general population of halogenated solvent cleaning machines, the aerospace manufacturing and maintenance facilities and military maintenance and depot facilities.

To estimate the costs of reducing emissions for individual facilities, the EPA first calculated the percent emission reductions necessary for each facility to comply with the levels being investigated. Then, control technologies were applied on a per unit basis to achieve the percent reduction necessary to achieve the level. The control technologies applied varied depending on the cleaning machine type, the solvent used, and the percent control required. As earlier stated, such control technologies include the replacement of existing units with vacuum-to-vacuum machines, solvent switching, and add-on controls. This proposal reflects our investigation of these control options and a determination of the direct costs associated with these emission reduction measures.

Prior to selection of the proposed emission limits and control efficiency requirements, we have considered the costs of each of the emission limits in providing various degrees of emission reductions, similar to our August 17, 2006, proposal and our Halogenated Solvent Cleaning rule. The costs for an individual facility were then determined based on the costs associated with the controls needed to meet the level and taking into account any increase or decrease in solvent costs. We have determined facilities in each sector of industries engaging in halogenated solvent cleaning that would have to add technology measures to control emissions at the various emission limits discussed in this preamble. With regard to the narrow tube manufacturing industry, we have applied costs that were incurred by specific facilities in Pennsylvania for purposes of meeting various proposed emission limits. We have also extrapolated some of these costs to facilities that use continuous web cleaning machines (e.g., use of nPB as a substitute for TCE). We also assumed that the necessary controls were all high efficiency and costlier controls. We did not apply any mid-level controls and their associated costs for instances where we had direct compliance costs to use as examples. In other words, when estimating costs for the facilities

[22] Ichihara *et al.* 2004b. Neurological Abnormalities in Workers of 1-Bromopropane Factory, Environmental Health Perspectives published by the National Institute of Environmental Health Sciences, National Institute of Health, U.S. Department of Health and Human Services, June 2004.

Ichihara *et al.* 2002. Neurological disorders in three workers exposed to 1-bromopropane. Journal of Occupational Health 44:1–7 (2002).

[23] WIL. 2001. An Inhalation Two-Generation Reproductive Toxicity Study of 1–Bromopropane in Rats. Conducted by Stump D. G. at WIL Research Laboratories, Inc., Sponsored by Brominated Solvents Consortium. May 24, 2001.

[24] The EPA has addressed the use of nPB as a solvent in industrial equipment for metals cleaning, electronics cleaning and precision cleaning under the Significant New Alternative Policy (SNAP) Program. Under SNAP, EPA reviews substitutes for ozone depleting substances to determine if a substitute would pose a substantially greater risk to human health or the environment than other substitutes that are available. See CAA section 612(c), 40 CFR Part 82, subpart G. Specifically, based on evidence that in solvent cleaning worker exposure levels were consistently below levels of concern, EPA concluded that users could use nPB as safely as other available substitutes. Thus, EPA found nPB acceptable as a substitute for methyl chloroform and CFC–113, (72 FR 30142 May 30, 2007). While under SNAP no restrictions were placed on the use of nPB in the solvent cleaning end uses addressed in the rule, SNAP approval does not relieve users from the obligation to comply with any other regulatory obligations, such as those that might apply under the 1994 NESHAP.

that manufacture narrow tubing, the EPA used cost information provided by facilities that manufacture narrow tubing that had already implemented control technologies, such as CAD, vacuum-to-vacuum machines, and switching to nPB. Additionally, costs and risk estimates were developed for the narrow tube manufacturing industry at various percent emission reduction levels and MC equivalent levels. We have then applied these associated direct costs to facilities that use continuous web cleaning machines because we have assumed that these associated direct costs would be a primary example of costs of complying with the various proposed emission limits for any facility with similar cleaning machines, similar solvent usage and similar HAP emission reduction. These applied assumptions are similar to our cost assumptions in the August 17, 2006, proposal. To more fully analyze the implications of the various emission limits, we re-calculated the overall and incremental annualized cost per cancer case avoided for each proposed option. The results of our analyses are summarized in Table 4 below. In general, we expect that facilities that use halogenated solvents with a higher URE, and as a result have lower emission limits, would likely incur higher costs to reduce emissions to the necessary limit. We are soliciting comments on these aspects of this proposal.

TABLE 4—COST ANALYSIS FOR PROPOSED OPTIONS

Option	1	2	3
Total Capital Costs (Millions)	$15.65	$37.58	$49.89
Net Annualized Costs (Millions)	$1.50	$3.73	$5.19
Operation and Maintenance Costs (Millions)	$0.76	$1.88	$2.61
Solvent Savings (Millions)	($3.65)	($4.00)	($4.96)
Total Annual Costs * (Millions)	($1.38)	$1.60	$2.83
Emissions Reduced (tons/yr)	1,681	2,601	3,058
Cancer Cases Avoided/yr	0.19	0.20	0.23
Cost Effectiveness of Control ($/ton)	($821)	$616	$927
Incremental Cost effectiveness (compared to next least stringent option) (Millions $/case avoided)	($7.0)	$293	$41

* Net Annualized Costs plus O&M plus Solvent Savings.

We are also presenting in Table 5 the associated costs and emission reductions for the sector-specific control options in light of the fact that we are soliciting comments on combinations of limits other than those represented by options 1 through 3 presented above in section III.

TABLE 5—COST ANALYSIS FOR SECTOR-SPECIFIC COMPONENTS OF OPTIONS 1, 2, AND 3

Emission limit	60,000 kg/yr MC equivalent for general degreaser population (does not include named sectors)	60,000 kg/yr MC equivalent for narrow tubing	80 percent overall control for continuous web cleaning machines at facilities emitting >60,000 kg/yr	100,000 kg MC equivalent for aerospace manufacture and maintenance	100,000 kg/yr MC equivalent for military maintenance and depot
Total Capital Costs (Millions)	$15.7	$21.92	$3.29	$9.02	$0.54
Net Annualized Costs (Millions)	$1.45	$2.23	$0.63	$0.87	$0.06
Operation and Maintenance Costs (Millions)	$0.72	$1.11	$0.31	$0.44	$0.04
Solvent Savings (Millions)	($3.50)	($0.36)	($0.34)	($0.68)	($0.16)
	Million	Thousand	Thousand	Thousand	Thousand
Total Annual Costs * (Millions)	($1.32)	$2.97	$0.60	$0.63	$0.06
Emissions Reduced (tons/yr)	1,621	920	290	324	89
Cost of Control ($/ton)	($832)	$3,238	$2,774	$1,933	($625)
Cost per Case Avoided (Millions)	($7.0)	$596	$177	$31	($56)

* Net Annualized Costs plus O&M plus Solvent Savings.

Other factors relevant to our ample margin of safety determination include (but are not limited to) impact on the national economy, small business impacts, cost-effectiveness, incremental cost-effectiveness, or net benefits.

All economic impact estimates incorporate the scale-up factor of 1.76 applied to affected source populations and costs. Option 1 is expected to affect 120 ultimate parent entities, and 40 of these parent entities (one-third of the total number of ultimate parent entities affected) are small as defined by the Small Business Administration (SBA) small business size standards. Of these 40 small entities, none have an annualized cost of greater than one percent of their sales. Option 2 is expected to affect 148 ultimate parent entities, and 52 (or 35 percent) of these entities are small. Of these 52 small entities, three have an annualized cost of greater than one percent of their sales. Finally, Option 3 is expected to affect 181 ultimate parent entities, and 56 (or 31 percent) of these entities are small. Of these 56 small entities, three have an annualized cost of greater than one percent of their sales.

6. Ample Margin of Safety Rationale for Each of the Proposed Options

This section provides the results of our reconsideration analysis and the options that the EPA believes suitable for proposal considering the issues raised by the petitioners and the capabilities of the industries affected by the source category NESHAP regulations. Specifically, Option 1 proposes the same limits promulgated in the Halogenated Solvent Cleaning rule that is the subject of this reconsideration. Option 2 introduces

more stringent emission limits (60,000 kg/yr MC equivalent) for the narrow tube manufacturing industry. Finally, Option 3 introduces more stringent limits for aerospace manufacturing and maintenance facilities (100,000 kg/yr MC equivalent) and facilities that use continuous web cleaning machines (80% overall control efficiency for units at facilities emitting greater than 60,000 kg/yr MC equivalent).

We recognize that there are significant differences between these options in terms of the level of emission reductions, the number of cancer cases avoided per year, and the associated costs of control, but we believe that each of the options presented provides an ample margin of safety consistent with the Benzene framework. We specifically solicit comment on the information included in Table 4 above and any other information relevant to our ample margin of safety determination.

i. What is our rationale for Option 1?

A 60,000 kg/yr MC equivalent limit would be applicable to sources associated with the general population of halogenated solvent cleaning machines. A 100,000 kg/yr MC equivalent limit would be applicable to halogenated solvent cleaning machines located at military maintenance and depot facilities. With respect to facilities that use continuous web cleaning machines, and halogenated solvent cleaning machines used by facilities that manufacture narrow tubing and aerospace manufacturing and maintenance facilities, we are proposing to readopt the 1994 NESHAP under CAA section 112(d)(6) and (f)(2) because, as discussed below, we are proposing that the current level of control called for by the 1994 NESHAP reduces HAP emissions to limits that present an acceptable level of risk, provide an ample margin of safety to protect public health, and prevent any adverse environmental effects. (This option represents the standards promulgated in the Halogenated Solvent Cleaning rule).

Under this option, the total HAP emissions would be reduced by 1,681 tpy. We anticipate that about 82 facilities and 98 halogenated solvent cleaning machines would be affected by this proposed option. Facilities would reduce their emissions to meet this proposed regulatory option by selecting control options that might include one or more of the following: (1) Solvent switching from a HAP solvent with a higher URE to a HAP solvent with a lower URE, such as switching from PCE or TCE to MC; (2) solvent switching from a HAP solvent to a non-HAP solvent; (3) retrofitting additional freeboard; (4) installing CAD; or (5) installing vacuum-to-vacuum machines.

We are proposing to conclude that Option 1 reduces HAP emissions to levels that present an acceptable level of risk, provides an ample margin of safety to protect public health, and prevents any adverse environmental effects. When Option 1 is applied to the facilities in the 2002 NEI database we estimate that the MIR decreases to about 50-in-1 million with an estimated reduction in cancer incidence of about 0.19 cases annually, with an annualized cost savings of $1.3 million, or a cost savings of about $822 per ton. The maximum chronic noncancer HI is lower than the baseline, ranging from 0.2 to 2.0 depending on which noncancer toxicity value is used in the assessment. Specifically, using the CalEPA chronic REL to assess TCE noncancer hazard, emissions from no facilities would result in exposures exceeding an HI of 1. Using the NYS DOH noncancer criterion to assess TCE noncancer hazard, emissions from the five narrow tube manufacturing facilities would result in exposures exceeding an HI of 1, the HI value is 2 for each of these facilities. The HIs for the five other facilities that are above 1 in the baseline using the NYS DOH noncancer criterion would fall below 1 under this option. In addition, considering the discussion of the conservatism associated with the chronic non-cancer toxicity of TCE using the NYS DOH criterion (discussed previously in section III), along with the additional cost and risk factors discussed above, we propose that this option provides an ample margin of safety to protect public health.

ii. What is our rationale for Option 2?

A 60,000 kg/yr MC equivalent limit would be applicable to sources associated with the general population of halogenated solvent cleaning machines and halogenated solvent cleaning machines used by facilities that manufacture narrow tubing. A 100,000 kg/yr MC equivalent limit would be applicable to halogenated solvent cleaning machines located at military maintenance and depot facilities. With respect to facilities that use continuous web cleaning machines, and halogenated solvent cleaning machines used by aerospace manufacturing and maintenance facilities, we are proposing to re-adopt the 1994 NESHAP under CAA section 112(d)(6) and (f)(2) because, as discussed below, we are proposing that the current level of control called for by the 1994 NESHAP reduces HAP emissions to levels that present an acceptable level of risk, provide an ample margin of safety to protect public health, and prevent any adverse environmental effects. We anticipate that about 105 facilities and 150 halogenated solvent cleaning machines would be subject to this proposed option. Facilities would reduce their emissions by selecting control options that might include one or more of the following: (1) Solvent switching from a HAP solvent with a higher URE to a HAP solvent with a lower URE, such as switching from PCE or TCE to MC; (2) solvent switching from a HAP solvent to a non-HAP solvent; (3) retrofitting additional freeboard; (4) installing CAD or; (5) installing vacuum-to-vacuum machines.

We are proposing to conclude that Option 2 reduces HAP emissions to levels that present an acceptable level of risk, provides an ample margin of safety to protect public health, and prevents any adverse environmental effects. When Option 2 is applied to the facilities in the 2002 NEI database, the MIR decreases to about 30-in-1 million with an estimated reduction in cancer incidence of about 0.20 cases annually, and annualized costs of $1.6 million, or annual costs of about $615 per ton. The maximum chronic noncancer HI is reduced from the baseline, to a range of 0.05 to 1 depending on which noncancer toxicity value is used in the assessment. The incremental annualized cost of control options 1 and 2 is about $3 million. The incremental emission reduced from Option 1 to Option 2 is 920 tons. Therefore the incremental cost-effectiveness between Options 1 and 2 is nearly $3,200/ton/year. The incremental cancer incidence reduction between options 1 and 2 is 0.01. The incremental cost-effectiveness/cancer case avoided is nearly $293 million.

iii. What is our rationale for Option 3?

A 60,000 kg/yr MC equivalent limit would be applicable to sources associated with the general population of halogenated solvent cleaning machines and halogenated solvent cleaning machines used by facilities that manufacture narrow tubing. A 100,000 kg/yr MC equivalent limit would be applicable to halogenated solvent cleaning machines used by aerospace manufacturing and maintenance facilities and halogenated solvent cleaning machines located at military maintenance and depot facilities. Facilities that use continuous web cleaning machines that exceed 60,000 kg/yr MC equivalent HAP emissions would have to achieve 80 percent overall control efficiency for those units.

We anticipate that about 130 facilities and 260 halogenated solvent cleaning machines would be subject to this proposed option. Facilities would reduce their emissions by selecting control options that might include one or more of the following: (1) Solvent switching from a HAP solvent with a higher URE to a HAP solvent with a lower URE, such as switching from PCE or TCE to MC; (2) solvent switching from a HAP solvent to a non-HAP solvent; (3) retrofitting additional freeboard; (4) installing CAD; or (5) installing vacuum-to-vacuum machines.

We are proposing to conclude that Option 3 reduces HAP emissions to levels that present an acceptable level of risk, provides an ample margin of safety to protect public health, and prevents any adverse environmental effects. When Option 3 is applied to 130 facilities in the 2002 NEI database, the MIR decreases to about 30-in-1 million with an estimated reduction in cancer incidence of about 0.23 cases annually, and annualized costs of $2.8 million, or annual costs of about $887 per ton. The incremental annualized cost of control Options 2 and 3 is about $1.2 million. The incremental emission reduced from Option 2 to Option 3 is 587 tons. Therefore the incremental cost-effectiveness/tons emissions reduced between Options 2 and 3 is nearly $2,100/ton/year. The incremental cancer incidence reduction between Options 2 and 3 is 0.03. The incremental cost-effectiveness/cancer case avoided is $41 million.

C. Clean Air Act Section 112(d)(6) Review

Petitioners also contend that the Halogenated Solvent Cleaning rule does not satisfy our obligations under CAA section 112(d)(6). Several petitioners state that our review of the 1994 NESHAP failed to consider the availability of current control technology, such as CAD, and capture and control system that could achieve upwards of 35 percent TCE emissions reduction by facilities that manufacture narrow tubing. Petitioners also identify CAD, and vacuum-to-vacuum machines, and other control options, such as solvent switching as compliance options for halogenated solvent cleaning machines used by facilities that manufacture narrow tubing that became available subsequent to promulgation of the Halogenated Solvent Cleaning rule. Further, petitioners allege that we failed to provide any explanation as to why several alternative emission reduction measures, such as either vacuum-to-vacuum machines or solvent switching were not available control options for facilities that use continuous web cleaning machines.

CAA section 112(d)(6) requires the EPA to review and revise, as necessary (taking into account developments in practices, processes, and control technologies), emission standards promulgated under CAA section 112(d) no less often than every eight years. In light of the petitions, we have re-assessed the issue of whether there have been developments in practices, processes and control technologies since issuance of the 1994 NESHAP. We have also reviewed the information concerning compliance options included in the various petitions, as some of that information was not available to the EPA at the time of promulgation of the Halogenated Solvent Cleaning rule. Additionally, we have held discussions with industry representatives on the availability of control measures and the potential for additional emission reductions.

We believe that there have been some developments in control technologies, practices and processes for the facilities that manufacture narrow tubing. The control technologies include the use of vacuum-to-vacuum technology and CAD. Other measures include, for example, switching from HAP to non-HAP cleaners, such as nPB and manufacturing process changes. We solicit comment on the extent to which these control approaches represent advances in the control of halogenated solvents for the entire source category or whether they are relevant only to certain sectors within the category.

Section 112(d)(6) grants EPA much discretion to revise the standards ''as necessary.'' Thus, although the specifically enumerated factors that EPA should consider all relate to technology (*e.g.*, developments in practices, processes and control technologies), the instruction to revise ''as necessary'' indicates that EPA is to exercise its judgment in this regulatory decision, and is not precluded from considering additional relevant factors, such as costs and risk. EPA has substantial discretion in weighing all of the relevant factors in arriving at the best balance of costs and emissions reduction and determining what further controls, if any, are necessary. This interpretation is consistent with numerous rulings by the U.S. Court of Appeals for the DC Circuit regarding EPA's approach to weighing similar enumerated factors under statutory provisions directing the agency to issue technology-based standards. *See, e.g. Husqvarna AB* v. *EPA*, 254 F.3d 195 (DC Cir. 2001). After weighing all relevant factors, we are proposing the same regulatory options described above for our 112(f)(2) residual risk analysis. Based on the information analyzed for the regulatory options, and discussed in detail above, we are proposing three options for emissions standards to satisfy the requirements of section 112(d)(6) review:

Proposed Option 1: A 60,000 kg/yr MC equivalent limit would be applicable to sources associated with the general population of halogenated solvent cleaning machines. A 100,000 kg/yr MC equivalent limit would be applicable to halogenated solvent cleaning machines located at military maintenance and depot facilities. With respect to facilities that use continuous web cleaning machines, halogenated solvent cleaning machines used by facilities that manufacture narrow tubing, and halogenated solvent cleaning machines used by aerospace manufacturing and maintenance facilities, we are proposing to re-adopt the 1994 NESHAP under CAA section 112(f)(2).

Proposed Option 2: A 60,000 kg/yr MC equivalent limit would be applicable to sources associated with the general population of halogenated solvent cleaning machines and halogenated solvent cleaning machines used by facilities that manufacture narrow tubing. A 100,000 kg/yr MC equivalent limit would be applicable to halogenated solvent cleaning machines located at military maintenance and depot facilities. With respect to facilities that use continuous web cleaning machines, and halogenated solvent cleaning machines used by aerospace manufacturing and maintenance facilities, we are proposing to re-adopt the 1994 NESHAP under CAA section 112(f)(2).

Proposed Option 3: A 60,000 kg/yr MC equivalent limit would be applicable to sources associated with the general population of halogenated solvent cleaning machines and halogenated solvent cleaning machines used by facilities that manufacture narrow tubing. A 100,000 kg/yr MC equivalent limit would be applicable to halogenated solvent cleaning machines used by aerospace manufacturing and maintenance facilities and halogenated solvent cleaning machines located at military maintenance and depot facilities. Facilities that use continuous web cleaning machines that exceed 60,000 kg/yr MC equivalent HAP emissions would have to achieve 80 percent overall control efficiency for those units.

We solicit comments on these proposed options.

D. Compliance Schedule

As discussed in section II, one petitioner stated that the 3-year compliance period appeared for the first time in the Halogenated Solvent Cleaning rule, making it impracticable to raise objections during the period provided for public comment. One petitioner argued that our assumption that facilities that manufacture narrow tubing could only achieve a 10 percent emission reduction within a 3-year compliance period was unsupported by the record and unexplained. Another petitioner argued that CAA section 112(f)(4) is the controlling provision that addresses compliance deadlines for existing sources with regard to standards promulgated under CAA sections 112(d)(6) and (f)(2).

At proposal, we determined that CAA section 112(i) was the controlling provision that addressed compliance deadlines for existing sources with regard to standards promulgated under CAA sections 112(d)(6) and (f)(2). For existing sources, we proposed a 2-year compliance deadline from the effective date of the rule. We were persuaded, however, by comments on our August 17, 2006 proposal and subsequent NODA, indicating that additional time beyond the proposed 2-year compliance deadline would be needed, and in the Halogenated Solvent Cleaning rule, we set a 3-year compliance period for existing sources, finding that this period was more appropriate given the time necessary to implement control approaches necessary to meet the emission requirements. Thus, we promulgated a 3-year compliance deadline for existing sources from the effective date of the Halogenated Solvent Cleaning rule.

In this action, for existing sources that were not subject to the emission reduction requirements in the Halogenated Solvent Cleaning rule,[25] we are proposing a 2-year compliance deadline from the date of publication of the final rule in the **Federal Register**. As to those sources that were subject to emission reduction requirements in the Halogenated Solvent Cleaning rule,[26] if the final rule on reconsideration changes those requirements significantly and makes them more stringent, we propose that these sources have two years from the date of publication of the final rule to comply with the requirements of the final rule. We believe that such an extension is appropriate to allow the affected facilities time to meet the more stringent emission limitations.

In the Halogenated Solvent Cleaning rule, we identified a conflict between section 112(i) and section 112(f)(4) of the Act. To avoid a conflict in these provisions addressing compliance deadlines, we interpreted the more specific and comprehensive set of provisions in section 112(i) as governing both CAA section 112(d) and (f) standards. We maintain this interpretation in this rule. We note, however, that the 2-year compliance deadline proposed in this action is consistent with an alternative interpretation of the Act, which petitioners endorse, that the provisions of CAA section 112(f)(4) control. CAA section 112(f)(4) would allow us to grant a 2-year extension of the compliance deadline for existing sources, in addition to the 90-day compliance date otherwise applicable. We believe that the proposed 2-year compliance deadline is necessary for the installation of controls at existing sources, and section 112(f)(4) would allow us to grant such an extension for the installation of controls. The proposed 2-year compliance deadline takes into account that the sources that have already installed controls appear to have done so within a two year period. Thus, we believe that this proposal falls within the 2-year plus 90-day period that would be allowed under CAA section 112(f)(4)(A)–(B) and is therefore within the permissible range of CAA section 112(f)(4), even if that section applies. We are also soliciting comments on this aspect of this proposal.

IV. Proposed Regulatory Text

Given that we are proposing a range of regulatory options, we have not prepared proposed regulatory text for each option. The regulatory text for Option 1 is, however, set forth in the Halogenated Solvent Cleaning rule. If we elect to finalize options 2 or 3 or some combination thereof, the regulatory text will follow the framework set forth in the Halogenated Solvent Cleaning rule.

V. Impacts

For the general population degreasing sources required to comply with the 60,000 kg/yr MC equivalent emission limit, the national capital costs to reach compliance are estimated to be $15,000,000 with annualized cost savings of $1.3 million (2007 dollars). The capital costs for individual facilities would range from $15,000 to $800,000 with an average cost of about $190,000.

More than 60 percent of the facilities implementing a control technology would recognize a cost savings primarily from solvent savings. Controlling solvent use is a pollution prevention approach where emissions reduction translate into less PCE, TCE and MC consumption and reduced operating costs primarily because facilities would need to purchase less solvents. Using the 2002 NEI database, the maximum individual cancer risk is estimated to be reduced from 100-in-1 million to between 50 and 20-in-1 million, depending on the control option selected. The options outlined here are expected to reduce cancer incidence from a source category wide baseline of 0.55 cases annually to 0.33 for Option 1, with reductions to 0.33 when continuing to Option 3, resulting in a range of reduction in cancer incidence from between 0.19 to 0.22 cases annually, depending upon the option selected. Additionally, Option 1 is expected to reduce the range of possible chronic noncancer HI values from 0.2 to 7 at the baseline, to 0.2 to 2, depending on which noncancer toxicity value is used in the assessment. Both Options 2 and 3 result in a reduction of the range of possible maximum chronic noncancer HI values from between 0.2 and 7 at the baseline, to between 0.05 and 1, depending on which noncancer toxicity value is used in the assessment.

The EPA estimates that to comply with the 100,000 kg/yr MC equivalent emission limit, military maintenance and depot facilities are expected to incur $540,000 in capital costs with annualized savings of about $56,000. Using the 2002 NEI database, the maximum individual cancer risk is estimated to be reduced from 6-in-1 million to 3-in-1 million. The emission limit for military maintenance and depot facilities is expected to reduce cancer incidence by 0.0002 cases annually.

The EPA also estimates that to comply with the 100,000 kg/yr MC equivalent emission limit, aerospace manufacturing and maintenance facilities are expected to incur $9 million in capital costs with annualized costs of about $626,000. Using the 2002 NEI database, this emission limit for aerospace manufacturing and maintenance facilities is expected to reduce cancer incidence by 0.03 cases annually.

The EPA also estimates that to comply with the 60,000 kg/yr MC equivalent emission limit, facilities that manufacture narrow tubing are expected

[25] These sources include halogenated solvent cleaning machines used by facilities that manufacture narrow tubing, facilities that manufacture specialized products requiring continuous web cleaning, and aerospace manufacturing and maintenance facilities.

[26] These sources include halogenated solvent cleaning machines at military maintenance and depot facilities and the general population of halogenated solvent cleaning machines.

to incur $22 million in capital costs with annualized costs of about $3 million. Using the 2002 NEI database, this emission limit for facilities that manufacture narrow tubing is expected to reduce cancer incidence by 0.005 cases annually.

The EPA further estimates that to comply with the 80 percent overall control efficiency, facilities that use continuous web cleaning machines with total emissions over the 60,000 kg/yr MC equivalent thresholds are expected to incur $3 million in capital costs with annualized costs of about $601,000. Using the 2002 NEI database, this emission limit for facilities that use continuous web cleaning machines is expected to reduce cancer incidence by 0.003 cases annually.

VI. Statutory and Executive Order Reviews

A. Executive Order 12866: Regulatory Planning and Review

Under Executive Order (EO) 12866 (58 FR 51735, October 4, 1993), this action is a ''significant regulatory action.'' EO 12866 gives the Office of Management and Budget (OMB) the authority to review regulatory actions that are categorized as ''significant'' under section 3(f) of the EO, i.e., those actions that are likely to result in a rule that may raise novel legal and policy issues arising out of mandates in CAA section 112(f)(2) and 112(d)(6). Accordingly, EPA submitted this action to OMB for review under EO 12866 and any changes made in response to OMB recommendations have been documented in the docket for this action.

In addition, EPA prepared an analysis of the potential costs and benefits associated with this action. The analysis, which is briefly summarized in section III of this Preamble, is contained in the Costs Analyses Memorandum, and has been placed in the docket for this action.

B. Paperwork Reduction Act

This action does not impose any new information collection burden. Owners or operators will continue to keep records and submit required reports to EPA or the delegated State regulatory authority. Notifications, reports, and records are essential in determining compliance and are required, in general, of all sources subject to the 1994 NESHAP. Owners or operators subject to the 1994 NESHAP continue to maintain records and retain them for at least five years following the date of such measurements, reports, and records. Information collection requirements that were promulgated on December 2, 1994, in the Halogenated Solvent Cleaning NESHAP prior to the 2006 proposed amendments, as well as the NESHAP General Provisions (40 CFR part 63, subpart A), which are mandatory for all owners or operators subject to national emission standards, are documented in EPA ICR No. 1652.06. OMB has previously approved the information collection requirements contained in the existing regulations 40 CFR part 63 Subpart T under the provisions of the Paperwork Reduction Act, 44 U.S.C. 3501 *et seq.* and has assigned OMB control number 2060–0273. The OMB control numbers for EPA's regulations in 40 CFR are listed in 40 CFR part 9.

C. Regulatory Flexibility Act

The Regulatory Flexibility Act (RFA) generally requires an agency to prepare a regulatory flexibility analysis of any rule subject to notice and comment rulemaking requirements under the Administrative Procedure Act or any other statute unless the agency certifies that the rule will not have a significant economic impact on a substantial number of small entities. Small entities include small businesses, small organizations, and small governmental jurisdictions.

For purposes of assessing the impacts of this rule on small entities, small entity is defined as: (1) A small business as defined by the Small Business Administration's (SBA) regulations at 13 CFR 121.201; (2) a small governmental jurisdiction that is a government of a city, county, town, school district or special district with a population of less than 50,000; and (3) a small organization that is any not-for-profit enterprise which is independently owned and operated and is not dominant in its field.

The companies owning the affected facilities using halogenated solvents can be grouped into small and large categories using SBA general size standard definitions. Size standards are based on industry classification codes (i.e., North American Industrial Classification System, or NAICS) that each company uses to identify the industry or industries in which they operate. SBA defines a small business in terms of the maximum employment, annual sales, or annual energy-generating capacity (for electricity generating units) of the owning entity. These thresholds vary by industry and are evaluated based on the primary industry classification of the affected companies. In cases where companies are classified by multiple NAICS codes, the most conservative SBA definition (i.e., the NAICS code with the highest employee or revenue size standard) was used.

As mentioned earlier in this preamble, facilities across a large number of industries use halogenated solvents, therefore a number of size standards are utilized in this analysis. For the 41 industries identified at the 6-digit NAICS code represented in this analysis, the employment size standard varies from 500 to 1,500 employees. The annual sales standard is as low as four million dollars and as high as 150 million dollars. The specific SBA size standard is identified for each affected industry within the small entity database created for this economic analysis.

After considering the economic impacts of this action on small entities, we have concluded that this action will not have a significant economic impact on a substantial number of small entities. This certification is based on the economic impact of this action on all affected small entities in the entire halogenated solvent cleaning source category. Option 1 is expected to affect 120 ultimate parent entities, and 40 of these parent entities (one-third of the total number of ultimate parent entities affected) are small as defined by SBA small business size standards. Of these 40 small entities none have an annualized cost of greater than one percent of their sales. Option 2 is expected to affect 148 ultimate parent entities, and 52 (or 35 percent) of these entities are small. Of these 52 small entities, three have an annualized cost of greater than one percent of their sales. Finally, Option 3 is expected to affect 181 ultimate parent entities, and 56 (or 31 percent) of these entities are small. Of these 56 small entities, three have an annualized cost of greater than one percent of their sales. More information on these impacts can be found in the economic impact analysis for this proposed rule, a document available in the public docket for this action.

Although this proposed rule will not have a significant economic impact on a substantial number of small entities, EPA nonetheless has tried to reduce the impact of this rule on small entities. When developing the proposed rule, we took special steps to ensure that the burdens imposed on small entities were minimal. We conducted several meetings with industry trade associations to discuss regulatory options and the corresponding burden on industry, such as recordkeeping and reporting.

Following publication of the proposed rule, copies of the **Federal Register** notice and, in some cases, background

documents, will be publicly available to all industries, organizations, and trade associations that have had input during the regulation development, as well as State and local agencies.

We continue to be interested in the potential impacts of this proposed rule on small entities and welcome comments on issues related to such impacts.

D. Unfunded Mandates Reform Act

This action contains no Federal mandates under the provisions of Title II of the Unfunded Mandates Reform Act of 1995 (UMRA), 2 U.S.C. 1531–1538 for State, local, or tribal governments or the private sector. The action imposes no enforceable duty on any State, local or tribal governments or the private sector. [The term ''enforceable duty'' does not include duties and conditions in voluntary Federal contracts for goods and services.] Therefore, this action is not subject to the requirements of sections 202 or 205 of the UMRA.

This action is also not subject to the requirements of section 203 of UMRA because it contains no regulatory requirements that might significantly or uniquely affect small governments.

E. Executive Order 13132: Federalism

Executive Order (EO) 13132, entitled ''Federalism,'' (64 FR 43255, August 10, 1999) requires EPA to develop an accountable process to ensure ''meaningful and timely input by State and local officials in the development of regulatory policies that have federalism implications.'' ''Policies that have federalism implications'' is defined in the EO to include regulations that have ''substantial direct effects on the States, on the relationship between the national government and the States, or on the distribution of power and responsibilities among the various levels of government.''

This proposed action does not have federalism implications. It will not have substantial direct effects on the States, on the relationship between the national government and the States, or on the distribution of power and responsibilities among the various levels of government, as specified in EO 13132. None of the affected halogenated solvent cleaning facilities are owned or operated by State or local governments. Thus, EO 13132 does not apply to this proposed action.

In the spirit of Executive Order 13132, and consistent with EPA policy to promote communications between EPA and State and local governments, EPA specifically solicits comment on this proposed rule from State and local officials.

F. Executive Order 13175: Consultation and Coordination With Indian Tribal Governments

This proposed action does not have tribal implications, as specified in Executive Order 13175 (65 FR 67249, November 9, 2000). It will not have substantial direct effects on tribal governments, on the relationship between the Federal government and Indian tribes, or on the distribution of power and responsibilities between the Federal government and Indian tribes as specified in EO 13175. Thus, Executive Order 13175 does not apply to this proposed action.

EPA specifically solicits additional comment on this proposed rule from tribal officials.

G. Executive Order 13045: Protection of Children From Environmental Health and Safety Risks

EPA interprets EO 13045 (62 FR 19885, April 23, 1997) as applying to those regulatory actions that concern health or safety risks, such that the analysis required under section 5–501 of the Order has the potential to influence the regulation. This action is not subject to EO 13045 because it is based solely on technology performance.

This proposed action is not subject to the EO because it is not economically significant as defined in EO 12866; the Agency believes this action represents reasonable further efforts to mitigate risks to the general public, including effects on children. This conclusion is based on our assessment of the imposed emission limits that would reduce chlorinated solvent impacts on human health associated with exposures to halogenated solvent cleaning operations.

H. Executive Order 13211: Actions Concerning Regulations That Significantly Affect Energy Supply, Distribution, or Use

This proposed action is not a ''significant energy action'' as defined in Executive Order 13211 (66 FR 28355, May 22, 2001), because it is not likely to have a significant adverse effect on the supply, distribution, or use of energy. This proposed action will have a negligible impact on energy consumption because about 10 percent of entities using halogenated solvent cleaning will have to reduce emissions through a range of activities involving simple process changes to the installation of additional emission control equipment or special low emitting machines to comply. The cost of energy distribution should not be affected by this proposed action at all since the standards do not affect energy distribution facilities. We also expect that there would be no impact on the import of foreign energy supplies, and no other adverse outcomes are expected to occur with regards to energy supplies. Further, we have concluded that this proposed action is not likely to have any significant adverse energy effects.

I. National Technology Transfer Advancement Act

Section 12(d) of the National Technology Transfer and Advancement Act (NTTAA) of 1995 (Pub. L. 104–113, 12(d) (15 U.S.C. 272 note), directs EPA to use voluntary consensus standards (VCS) in its regulatory activities unless to do so would be inconsistent with applicable law or otherwise impractical. VCS are technical standards (e.g., materials specifications, test methods, sampling procedures, and business practices) that are developed or adopted by VCS bodies. The NTTAA directs EPA to provide Congress, through OMB, explanations when the Agency decides not to use available and applicable VCS.

This proposed action does not involve technical standards. Therefore, we are not considering the use of any voluntary consensus standards.

J. Executive Order 12898: Federal Actions To Address Environmental Justice in Minority Populations and Low-Income Populations

Executive Order 12898 (59 FR 7629, Feb. 16, 1994) establishes federal executive policy on environmental justice. Its main provision directs federal agencies, to the greatest extent practicable and permitted by law, to make environmental justice part of their mission by identifying and addressing, as appropriate, disproportionately high and adverse human health or environmental effects of their programs, policies, and activities on minority populations and low-income populations in the United States.

EPA has determined that this proposed rule will not have disproportionately high and adverse human health or environmental effects on minority or low-income populations because it increases the level of environmental protection for all affected populations without having any disproportionately high and adverse human health or environmental effects on any population, including any minority or low-income population.

List of Subjects in 40 CFR Part 63

Environmental protection, Air pollution control, Hazardous substances, Reporting and recordkeeping requirements.

Dated: October 3, 2008.

Stephen L. Johnson,

Administrator.

[FR Doc. E8–24013 Filed 10–17–08; 8:45 am]

BILLING CODE 6560–50–P

Federal Register

Monday,
October 20, 2008

Part III

Department of the Treasury

Internal Revenue Service

26 CFR Part 54

Department of Labor

Employee Benefits Security Administration

29 CFR Part 2590

Department of Health and Human Services

Centers for Medicare & Medicaid Services

45 CFR Parts 144, 146, and 148

Final Rules for Group Health Plans and Health Insurance Issuers Under the Newborn and Mothers, Health Protection Act; Final Rule

DEPARTMENT OF THE TREASURY

Internal Revenue Service

26 CFR Part 54

[TD 9427]

RIN 1545–BG82

DEPARTMENT OF LABOR

Employee Benefits Security Administration

29 CFR Part 2590

RIN 1210–AA63

DEPARTMENT OF HEALTH AND HUMAN SERVICES

Centers for Medicare & Medicaid Services

45 CFR Parts 144, 146, and 148

RIN 0938–AI17

Final Rules for Group Health Plans and Health Insurance Issuers Under the Newborns' and Mothers' Health Protection Act

AGENCIES: Internal Revenue Service, Department of the Treasury; Employee Benefits Security Administration, Department of Labor; Centers for Medicare & Medicaid Services, Department of Health and Human Services.

ACTION: Final rules.

SUMMARY: This document contains final rules for group health plans and health insurance issuers concerning hospital lengths of stay for mothers and newborns following childbirth, pursuant to the Newborns' and Mothers' Health Protection Act of 1996 and the Taxpayer Relief Act of 1997.

DATES: *Effective Date:* These final regulations are effective December 19, 2008.

Applicability Dates: Group market rules. These final regulations for the group market apply to group health plans and group health insurance issuers for plan years beginning on or after January 1, 2009.

Individual market rules. These final regulations for the individual market apply with respect to health insurance coverage offered, sold, issued, renewed, in effect, or operated in the individual market on or after January 1, 2009.

FOR FURTHER INFORMATION CONTACT: Amy Turner or Beth Baum, Employee Benefits Security Administration, Department of Labor, at (202) 693–8335; Russ Weinheimer, Internal Revenue Service, Department of the Treasury, at (202) 622–6080; or Adam Shaw, Centers for Medicare & Medicaid Services, Department of Health and Human Services, at (877) 267–2323 extension 61091.

Customer service information: Individuals interested in obtaining copies of Department of Labor publications concerning health care laws may request copies by calling the EBSA Toll-Free Hotline at 1–866–444–EBSA (3272) or may request a copy of CMS's publication entitled ''Protecting Your Health Insurance Coverage'' by calling 1–800–633–4227. These regulations as well as other information on the Newborns' and Mothers' Health Protection Act and other health care laws are also available on the Department of Labor's Web site (*http://www.dol.gov/ebsa*), including the interactive web pages, Health *E*laws.

SUPPLEMENTARY INFORMATION:

I. Background

The Newborns' and Mothers' Health Protection Act of 1996 (Newborns' Act), Public Law 104–204, was enacted on September 26, 1996. The rules contained in this document implement changes made to the Employee Retirement Income Security Act of 1974 (ERISA) and the Public Health Service Act (PHS Act) made by the Newborns' Act, and parallel changes to the Internal Revenue Code of 1986 (Code) enacted as part of the Taxpayer Relief Act of 1997 (TRA '97). The Newborns' Act was enacted to provide protections for mothers and their newborn children with regard to hospital lengths of stay following childbirth. Interim final rules implementing the group and individual market provisions of the Newborns' Act were published in the **Federal Register** on October 27, 1998 (63 FR 57546) (the interim final rules).

These regulations being published today in the **Federal Register** finalize the interim final rules. The final regulations implementing the group market provisions of the Newborns' Act are issued jointly by the Secretaries of the Treasury, Labor, and HHS.[1] The individual market final regulations are issued solely by HHS.[2]

II. Overview of the Regulations

Section 9811 of the Code, section 711 of ERISA, and sections 2704 and 2751 of the PHS Act (the Newborns' Act provisions) provide a general rule under which a group health plan and a health insurance issuer may not restrict mothers' and newborns' benefits for a hospital length of stay in connection with childbirth to less than 48 hours following a vaginal delivery or 96 hours following a delivery by cesarean section. The interim final rule—

- Provided that the attending provider makes the determination that an admission is in connection with childbirth;
- Determined when the hospital stay begins for purposes of application of the general rule;
- Provided an exception to the 48-hour (or 96-hour) general rule if the attending provider decides, in consultation with the mother, to discharge the mother or her newborn earlier;
- Clarified the application of authorization and precertification requirements with respect to the 48-hour (or 96-hour) stay;
- Explained the application of benefit restrictions and cost-sharing rules with respect to the 48-hour (or 96-hour) stay;
- Clarified the prohibitions with respect to a plan or issuer offering mothers incentives or disincentives to encourage less than the 48-hour (or 96-hour) stay;
- Clarified the prohibitions against incentives and penalties with respect to attending providers; and
- Included the statutory notice provisions under ERISA and the PHS Act. In general, these final regulations do not change the interim final rules. However, the text of these final regulations incorporates a clarifying statement from the preamble of the interim final rules that the definition of attending provider does not include a plan, hospital, managed care organization, or other issuer. The text also makes a small clarification with respect to state law applicability.

In addition, these final regulations make minor clarifications to the notice requirements for nonfederal governmental plans. The interim final rules specified that the notice of post-childbirth hospitalization benefits must be included in the plan document that described plan benefits to participants and beneficiaries. These final regulations specify that any notice a nonfederal governmental plan must provide under these regulations can be included either in the plan document that describes benefits, or in the type of document the plan generally uses to inform participants and beneficiaries of plan benefit changes. These final regulations also specify that any time a plan distributes one or both of these documents after providing the initial notice, the applicable statement must

[1] 26 CFR 54.9811–1, 29 CFR 2590.711, 45 CFR 146.130.

[2] 45 CFR 148.170.

appear in one or both of these documents.

Hospital Length of Stay

The interim final rules and these final regulations provide that when a delivery occurs in the hospital, the stay begins at the time of delivery (or, in the case of multiple births, at the time of the last delivery) rather than at the time of admission or onset of labor. Also, the interim final rules and these final regulations provide that when a delivery occurs outside of the hospital, the stay begins at the time the mother or newborn is admitted (rather than at the time of delivery).

Some comments expressed concern that this rule somehow required birthing centers or other non-hospital facilities to extend the right to stay to more than 24 hours. These comments noted that such extended stays may violate local regulations or otherwise conflict with the operations of such facilities. The statute and these final regulations do not require hospitals or other facilities to provide particular lengths of stay, but instead require group health plans and health insurance issuers to provide benefits for particular hospital lengths of stay.

A comment recommended that if a delivery was planned for outside of a hospital, any following admission in response to complications resulting from that delivery should be excluded from the provisions providing for particular lengths of stay. These final regulations do not distinguish between a delivery that was planned for outside of the hospital and other deliveries occurring outside of a hospital.

Definition of Attending Provider

The mandatory coverage period provisions are not violated if the attending provider, in consultation with the mother, decides to discharge the mother or newborn earlier. Under the interim final rules and these final regulations, the attending provider is defined by a functional analysis of state licensure rules and the actual performance of care. Under this definition, the attending provider is restricted to an individual who is licensed under applicable state law to provide maternal or pediatric care and who is directly responsible for providing such care to a mother or newborn child. While the preamble to the interim final rules noted that this definition could include a nurse midwife or physician assistant, the regulation itself does not provide a list of titles or positions that qualify as attending providers.

Some comments requested that additional titles, such as pediatric nurse practitioners, or nurse practitioners, be specifically mentioned in the definition. While positions with these titles may meet the definition in many cases, as noted above, the language of the regulation takes a functional approach and does not provide a list of titles or positions that qualify as attending providers. This functional approach is more useful in addressing who the attending provider is on an ongoing basis, as specific position titles and responsibilities may vary from location to location as well as over time.

It was also suggested that the text of the final regulations incorporate a clarifying statement from the preamble of the interim final rules that the definition of attending provider does not include a plan, hospital, managed care organization, or other issuer. These final regulations adopt this suggestion.

Compensation of Attending Provider

Several comments addressed the provisions in the interim final rules that relate to the compensation of physicians and other attending providers. These provisions prohibit plans and issuers from penalizing attending providers who provide care in accordance with the regulations, and prohibit plans and issuers from inducing attending providers to provide care in a manner that is inconsistent with the regulations. At the same time, the statute specifies that plans and issuers are still free to negotiate with attending providers the level and type of compensation for care furnished in accordance with the regulations.

The comments requested greater specificity in the final regulations for distinguishing between the types of compensation arrangements that are permissible under the negotiation provision and those that are impermissible under the prohibitions against penalties and inducements. One comment suggested that it is clear that a bonus arrangement for obstetricians and gynecologists contingent on the percentage of discharges within 24 hours would not be permitted. The comment requested confirmation that arrangements with a more general focus would be permitted, such as a global payment for prenatal care and childbirth, or a bonus for a multi-specialty group including obstetricians and gynecologists based on the utilization for all patients served by the group. Another comment expressed a concern about whether capitated arrangements are consistent with the hospital length-of-stay requirements.

The Departments devoted considerable resources over a sustained period of time to develop rules that provide greater specificity for distinguishing between negotiated compensation arrangements that would give attending providers an incentive to deliver health care services efficiently and arrangements that could give providers an incentive to discharge patients in contravention of the statute and regulations. The great variety, complexity, and mutability of such arrangements [3] would have required extensive rules that at best were likely to impose heavy administrative costs and yet were still of only marginal value in clarifying what arrangements would be permissible. For this reason, the rules on compensation arrangements for attending providers are adopted unchanged from the interim final rules.

The final regulations do not attempt to provide guidance on this issue through examples. Certainly the bonus arrangement described in one comment, based on the percentage of discharges within 24 hours, violates the prohibition against providing inducements for early discharge. Such an example is not included in the final regulations to avoid the inference that anything less blatant would be permissible. Examples of less blatant arrangements could be similarly misleading, whether the conclusion was that the arrangement was permissible or impermissible, since there are bound to be differences between arrangements that would have been described in the regulations and any actual arrangement for an attending provider, and in some cases even minor differences could change the result.

Authorization and Precertification

The interim final rules and these final regulations provide, under paragraph (a), that a group health plan or a health insurance issuer may not require a physician or other health care provider to obtain authorization from the plan or issuer to prescribe a hospital length of stay that is subject to the general rule.

[3] Broad classes of examples include fee-for-service, capitation, productivity-based salary, incentive contracting, blended systems, prospective versus post-service payment, etc. *See e.g., Theory and Practice in the Design of Physician Payment Incentives,* James C. Robinson (University of California, Berkley), The Milbank Quarterly, Vol. 79, No. 2, 2001; *Regulation of Managed Care Incentive Payments to Physicians,* Stephen Latham (Boston University School of Law), 22 Am. J.L. & Med. 399; *Blended Payment Methods in Physician Organizations Under Managed Care,* James C. Robinson, JAMA 1999;282:1258–1263; *The Alignment and Blending of Payment Incentives Within Physician Organizations,* JC Robinson, SM Shortell, R Li, LP Casalino, T Rundall, Health Services Research Vol 39, Issue 5, pages 1589–1606, Oct. 2004.

Under paragraph (b) of the interim final rules and these final regulations, a plan or issuer may not restrict benefits for part of a stay that is subject to the general rule in a way that is less favorable than a prior portion of the stay. An example in the interim final rules and these final regulations illustrates that a plan or issuer is precluded from requiring a covered individual to obtain precertification for any portion of a hospital stay that is subject to the general rule if precertification is not required for any preceding portion of the stay. However, the interim final rules do not prevent a plan or issuer from requiring precertification for any portion of a stay after 48 hours (or 96 hours), or from requiring precertification for an entire stay.

Under paragraph (c) of the interim final rules and these final regulations, a plan or issuer may not increase an individual's coinsurance for any later portion of a 48-hour (or 96-hour) hospital stay. An example in the interim final rules and these final regulations illustrates that plans and issuers may vary cost-sharing in certain circumstances, provided the cost-sharing rate is consistent throughout the 48-hour (or 96-hour) hospital length of stay.

One comment asked whether less favorable cost sharing for the 48-hour (or 96-hour) stay can be applied to covered individuals who fail to give advance notice or notice upon admission for the services or providers related to the stay, if such a penalty applies in other hospitalization situations. This issue was addressed in Example 2 of paragraph (c)(3) of the interim final rules. This example is repeated in the final regulations and illustrates that a plan may require advance notice for services or providers related to hospital length of stay in connection with childbirth, in order for a covered individual to obtain more favorable cost sharing under the plan or coverage. Such requirements may not be used to deny an individual benefits for any portion of the 48-hour (or 96-hour) stay based on a determination of medical necessity or appropriateness. Any variance in cost-sharing related to compliance with a plan's or an issuer's advance notice requirements must be applied consistently throughout the 48-hour (or 96-hour) stay. Under the principles set forth in the rule and illustrated in this example, a plan or issuer could generally apply less favorable cost sharing towards the hospital length of stay in connection with childbirth of an individual who failed to satisfy the plan's advance notice requirements, to the extent permissible under the preexisting condition rules in 26 CFR 54.9801–3, 29 CFR 2590.701–3, and 45 CFR 146.111 and 148.120.[4]

Notice Requirements under ERISA and the PHS Act

This section of the final regulations addresses the Newborns' Act notice requirements under ERISA and the PHS Act. The interim final rules, and these final regulations, contain different notice provisions for ERISA-covered group health plans, nonfederal governmental plans, and health insurance issuers in the individual market. ERISA-covered group health plans are required to comply with the ERISA notice regulations, whether insured or self-insured. Nonfederal governmental plans and health insurance issuers in the individual market are required to comply with the PHS Act notice regulations. Because there are fundamental differences between the types of entities regulated under ERISA as compared to the PHS Act, and in the structure of the two acts, the notice requirements in the ERISA regulations and PHS Act regulations differ.

Notice Requirements under ERISA. The interim final rules and these final regulations require group health plans that are subject to ERISA to comply with summary plan description (SPD) disclosure requirements at 29 CFR 2520.102–3(u). The SPD rules generally require that participants and beneficiaries in a group health plan be furnished an SPD to apprise them of their rights and obligations. The rules also prescribe the content of the SPD and the manner and timing in which participants and beneficiaries are to be notified of any material modification to the terms of the plan or any change in the information required to be included in the SPD.

In November 2000, the Department of Labor finalized the SPD content regulation (65 FR 70241) requiring that all group health plans (including insured plans not subject to the federal Newborns' Act) provide language in the SPD that describes the federal or state law requirements applicable to the plan or any health insurance coverage offered under the plan relating to hospital lengths of stay in connection with childbirth for the mother or newborn child. If federal law applies in some areas in which the plan operates and state law applies in other areas, the SPD should describe the different areas and the federal or state law requirements applicable in each. Model language for plans subject to the federal Newborns' Act's requirements is included in the SPD content regulation. This change became applicable as of the first day of the second plan year beginning on or after January 22, 2001.

Some comments asked for clarification about whether the notice can be provided through electronic media, as an alternative to traditional paper disclosure. Under ERISA, the notice can be provided through electronic media if the plan complies with ERISA's electronic disclosure rules in 29 CFR 2520.104b–1.

Some comments requested that the rules require plans to provide information to patients and providers regarding who has legal oversight with respect to the Newborns' Act and who to contact in the event of a violation. However, this concern is already addressed by current regulation. Under 29 CFR 2520.102–3(t)(1) of the SPD content rules, ERISA plans are required to provide a statement of ERISA rights in the SPD. Among other things, this provision requires ERISA-covered plans to provide information on the enforcement of a participant or beneficiary's rights and who to contact if there are any questions about the plan.

Notice Requirements under the PHS Act. Nonfederal governmental plans. The Newborns' Act requires nonfederal governmental plans to comply with the Newborns' Act notice requirements under section 711(d) of ERISA as if section 711(d) applied to such plans.

The interim final rules and these final regulations require plans that are subject to the federal Newborns' Act requirements to provide a notice with specific language describing the federal requirements. Under the interim final rules and these final regulations, if federal law applies in some areas in which the plan operates and state law applies in others, the plan must provide the appropriate notice to each participant and beneficiary who is covered by federal law.

Several comments on the interim final rules objected that specific language was required for the disclosure statement, and suggested that the regulation instead should have provided guidelines for plans to base their own language on (such as language that

[4] In order to avoid imposing an impermissible preexisting condition exclusion, plans and group health insurance issuers that require individuals to notify the plan or issuer of pregnancy within a certain amount of time (for example, within the first trimester) must waive or modify the notice requirement for individuals who enroll in the plan after the time notice was required. This also applies to individual market issuers with respect to federally eligible individuals they are required to enroll.

comports with the Department of Labor's sample language). However, requiring specific language ensures the substantive adequacy of the notices. Additionally, because many plans presumably have already incorporated that mandatory language into their documents since the effective date of the interim final rules, continuing to require that language is the simplest approach.

As in the interim final rules, these final regulations require nonfederal governmental plans to provide notice not later than 60 days after the first day of the plan year following the effective date, regardless of whether the plan had already provided notice under the Department of Labor standards. This takes into account the fundamental differences between the nonfederal governmental plans regulated under the PHS Act and the types of entities regulated under ERISA. However, with respect to the requirement that notice be provided within that 60-day period, the final regulations include an exception for plans with regard to participants and beneficiaries for whom the plan has already provided notices in accordance with the interim final regulations that are consistent with these final regulations (such as self-insured nonfederal governmental plans that are subject to the federal Newborns' Act requirements and that have already provided such notices).

Health insurance issuers in the individual market. The Newborns' Act requires health insurance issuers in the individual market to comply with the Newborns' Act notice requirements under section 711(d) of ERISA as if section 711(d) applied to such issuers. Thus, the interim final rules and these final regulations require individual market health insurance issuers that provide benefits for hospital lengths of stay in connection with childbirth to include, in the insurance contract, a rider, or equivalent amendment to the contract, specific language that notifies policyholders of their rights under the Newborns' Act. The interim final rules and these final regulations also require such issuers to provide this notice not later than a specific time frame that is within a few months after the effective date of the regulations.

Several comments on the interim final rules objected that specific language was required for the disclosure statement and suggested instead there should be guidelines for issuers to base their own language on. However, requiring specific language ensures the substantive adequacy of the notices. Additionally, because issuers presumably have already incorporated that language into their documents since the effective date of the interim final rules, continuing to require that same language is the simplest approach.

These final regulations retain the notice exception in the interim final rules for issuers that are subject only to state insurance law requirements regarding hospital lengths of stay following childbirth.

Applicability in States

The statute and the interim final rules include an exception to the Newborns' Act requirements for health insurance coverage in certain states. Specifically, the Newborns' Act and the interim final rules do not apply with respect to health insurance coverage if there is a state law that meets any of the criteria [5] that follow:

- The state law requires health insurance coverage to provide at least a 48-hour (or 96-hour) hospital length of stay in connection with childbirth;
- The state law requires health insurance coverage to provide for maternity and pediatric care in accordance with guidelines established by the American College of Obstetricians and Gynecologists, the American Academy of Pediatrics, or any other established professional medical association; or
- The state law requires that decisions regarding the appropriate hospital length of stay in connection with childbirth be left to the attending provider in consultation with the mother. The interim final rules and these final regulations clarify that state laws that require the decision to be made by the attending provider with the consent of the mother satisfy this criterion.

Although this exception applies with respect to insured group health plans, it does not apply with respect to a group health plan to the extent the plan provides benefits for hospital lengths of stay in connection with childbirth other than through health insurance coverage. Accordingly, self-insured plans in all states generally are required to comply with the federal requirements (except those nonfederal governmental plans that have opted out of the PHS Act requirements).

These final regulations repeat the statute and the interim final rules with one clarification. With respect to the second criterion above (professional guidelines), the statute only addresses the period following a vaginal delivery or a caesarean section. Accordingly, although guidelines issued by professional medical associations such as the American College of Obstetricians and Gynecologists (ACOG) cover a spectrum of care both before and after childbirth, the only relevant guidelines for this purpose are those pertaining to care following childbirth. Therefore, the final rules include an express clarification that State law need only require coverage in accordance with professional guidelines that deal with care following childbirth. Guidelines relating to other issues are not relevant for this purpose.

One comment to the interim final rules supported the criteria used in those rules for determining whether the federal Newborns' Act applies in a given state. However, another comment objected to the fact that issuers in states that have enacted one of the three types of state laws described in the federal Newborns' Act would arguably be exempt from several of the federal Act's requirements, such as the prohibitions on offering incentives to providers to induce them to provide care in a manner inconsistent with the Act. This comment asked us to reconsider whether the regulations should provide such a broad exception from the federal Act's requirements in such states. The statutory language does not require state law to include all the federal provisions, such as the anti-incentive provisions, in order for health insurance coverage in that state to be excepted from the federal requirements. In light of this flexibility, these final regulations retain the exception from the interim final rules.

Applicability Date

These final rules apply to group health plans, and health insurance issuers offering group health insurance coverage, for plan years beginning on or after January 1, 2009. The final rules for the individual market apply with respect to health insurance coverage offered, sold, issued, renewed, in effect, or operated in the individual market on or after January 1, 2009. Until the applicability date for this regulation, plans and issuers are required to continue to comply with the corresponding sections of the regulations previously published in the **Federal Register** (63 FR 57546) and other applicable regulations.

[5] HHS has the responsibility to enforce the federal Newborns' Act with regard to issuers in states that do not have one of the three types of state laws described in the Newborns' Act. As of the publication of these final regulations, the only state in which HHS is enforcing the Newborns' Act with respect to issuers is Wisconsin.

III. Economic Impact and Paperwork Burden

Summary—Department of Labor and Department of Health and Human Services

The Newborns' Act provisions generally prohibit group health plans and group health insurance issuers from limiting hospital lengths of stay in connection with childbirth to less than 48 hours for vaginal deliveries and 96 hours for cesarean sections and from requiring a health care practitioner to obtain preauthorization for such stays. For insured coverage, the Newborns' Act allows any state law, meeting one of three criteria, to take its place. The Departments have crafted these regulations to secure the Act's protections in as economically efficient a manner as possible, and believe that the economic benefits of the regulations justify their costs.[6]

The primary economic benefits associated with securing these minimum lengths of stay derive from the reduction in complications linked to premature discharge of mothers and newborns. Complications that are easily treated and readily identifiable, like excessive bleeding and infection in new mothers and dehydration and hyperbilirubinemia in their newborns, are common causes for readmission following a premature discharge. These complications and the subsequent readmissions are expensive and cause avoidable suffering for mothers and their newborns.

By eliminating the need to obtain preauthorization for affected stays, the Act provides affected individuals with increased access to the health care system. Increased access fosters timelier and fuller medical care, better health outcomes, and improved quality of life. This is especially true for certain individuals affected by the Newborns' Act provisions. For example, lower-income individuals, when denied coverage for the full length of stay, are more likely to forego care for financial reasons. When adverse health outcomes result, costs for the individual and the plan are high. For these individuals especially, this requirement is more likely to mean receiving timely, quality postnatal care, and living healthier lives.

Any mandate to increase the richness of health benefits, however, adds to the cost of health coverage. Plans can mitigate costs by increasing cost-sharing or by reducing non-mandated benefits. This in turn shifts the economic burden of the regulation to plan participants, and may induce some employers and employees, as well as those in the individual insurance market, to drop coverage. The cost of enacting federal minimum stay regulation is estimated to fall between $139 and $279 million annually.[7] However, as this constitutes a small fraction of one percent of total health care expenditures, it would most likely be a small, possibly negligible, factor in most employers' decisions to offer health coverage and individuals' decisions to enroll.

While the interim final regulations clarified several provisions within the statute, this action serves primarily to provide the certainty associated with a final rule for the regulated community, as well as update the cost of the regulation, adjusting for changes in the landscape of the community. Because these regulations are being published several years after the Newborns' Act's passage and minimal interpretation of the statutory language was required, the regulatory implementation costs should be negligible. Costs of the final regulation are detailed below in the section entitled ''Unified Analysis of Costs and Benefits.'' Benefits of the regulation are also discussed in that section at length, although because the benefits primarily involve quality of life improvements, the Departments have not attempted to quantify them. They do, however, believe them to be sufficiently large so as to justify the cost of the regulation.

Executive Order 12866—Department of Labor and Department of Health and Human Services

Under Executive Order 12866, the Departments must determine whether a regulatory action is ''significant'' and therefore subject to the requirements of the Executive Order and subject to review by the Office of Management and Budget (OMB). Under section 3(f), the order defines a ''significant regulatory action'' as an action that is likely to result in a rule (1) having an annual effect on the economy of $100 million or more, or adversely and materially affecting a sector of the economy, productivity, competition, jobs, the environment, public health or safety, or state, local or tribal governments or communities (also referred to as ''economically significant''); (2) creating serious inconsistency or otherwise interfering with an action taken or planned by another agency; (3) materially altering the budgetary impacts of entitlement grants, user fees, or loan programs or the rights and obligations of recipients thereof; or (4) raising novel legal or policy issues arising out of legal mandates, the President's priorities, or the principles set forth in the Executive Order.

Pursuant to the terms of the Executive Order, it has been determined that this action is ''economically significant'' and is subject to OMB review under Section 3(f) of the Executive Order. Consistent with the Executive Order, the Departments have assessed the costs and benefits of this action. The Departments' assessment, and the analysis underlying the assessment, is detailed below. The Departments performed a comprehensive, unified analysis to estimate the costs and benefits attributable to the regulations for purposes of compliance with Executive Order 12866, the Regulatory Flexibility Act, and the Paperwork Reduction Act.

These final regulations are needed to provide certainty for the affected community, as well as clarify the economic burden that the Newborns' Act will place on health plans and their participants. The Departments believe that this regulation's benefits will justify its costs. This belief is grounded in the assessment of costs and benefits that is summarized earlier and detailed below.

Regulatory Flexibility Act—Department of Labor and Department of Health and Human Services

The Regulatory Flexibility Act (5 U.S.C. 601 *et seq.*) (RFA) imposes certain requirements with respect to Federal rules that are subject to the notice and comment requirements of section 553(b) of the Administrative Procedure Act (5 U.S.C. 551 *et seq.*) and likely to have a significant economic impact on a substantial number of small entities. Unless an agency certifies that a final rule will not have a significant economic impact on a substantial number of small entities, section 604 of the RFA requires that the agency present a final regulatory flexibility analysis (FRFA) at the time of the publication of the notice of final rulemaking describing

[6] The Newborns' Act still requires that insured plans disclose a notice outlining participants' rights regarding hospital lengths of stay related to childbirth. Nonetheless, final regulations related to that notice were published separately (see 65 FR 70266, Nov. 21, 2000) and so those costs are not included herein.

[7] The vast majority of this cost is attributable to the impact of the statute. ($14 million is the upper bound cost attributable to the exercise of regulatory discretion.) Moreover, there are no increased costs attributable to any new exercise of regulatory discretion in the final rule. Instead, the final rule repeats the interpretations of the interim final rule. Any increased costs over the 1998 estimate in the interim final rules are attributable to economic factors, such as increased cost of care (from 1996 to 2007 dollars), increased number of births, and increased number of participants and beneficiaries covered by self-insured plans to which the regulations apply.

the impact of the rule on small entities. Small entities include small businesses, organizations, and governmental jurisdictions.

Because the 1998 rules were issued as interim final rules and not as a notice of proposed rulemaking, the RFA did not apply and the Departments were not required to either certify that the rule would not have a significant impact on a substantial number of small entities or conduct a regulatory flexibility analysis. The Departments nonetheless crafted those regulations in careful consideration of effects on small entities, and conducted an analysis of the likely impact of the rules on small entities. This analysis was detailed in the preamble to the interim final rule.

For purposes of this discussion, the Departments consider a small entity to be an employee benefit plan with fewer than 100 participants. Pursuant to the authority of section 104(a)(3) of ERISA, the Department of Labor has previously issued at 29 CFR 2520.104–20, 2520.104–21, 2520.104–41, 2520.104–46 and 2520.104b–10, certain simplified reporting provisions and limited exemptions from reporting and disclosure requirements for small plans, including unfunded or insured welfare plans covering fewer than 100 participants and which satisfy certain other requirements.

Further, while some small plans are maintained by large employers, most are maintained by small employers. Both small and large plans may enlist small third party service providers to perform administrative functions, but it is generally understood that third party service providers shift their costs to their plan clients in the form of fees. Thus, the Departments believe that assessing the impact of this final rule on small plans is an appropriate substitute for evaluating the effect on small entities. The definition of small entity considered appropriate for this purpose differs, however, from a definition of small business based on size standards promulgated by the Small Business Administration (SBA) (13 CFR 121.201) pursuant to the Small Business Act (5 U.S.C. 631 *et seq.*). The Department of Labor solicited comments on the use of this standard for evaluating the impact of the proposed regulations on small entities. No comments were received with respect to this standard.

The Departments believe that the final regulation will not have a significant economic impact on a substantial number of small entities. The direct costs of restricting short stay policies is estimated to fall between $15 million and $31 million for small plans which amount to a per-participant cost of between nine and nineteen dollars for those plans affected, or a small fraction of one percent of total small plan expenditures.[8]

The Departments estimate that prior to the Act, 115,000 small plans with 1.6 million participants would have restricted lengths of stay in connection with childbirth or required preauthorization for such stays.[9] While this represents just 5 percent of all small plans, the Departments believe it may represent a substantial number of small entities.

Paperwork Reduction Act—Department of Labor and Department of Health and Human Services

1. Department of Labor

These rules contain no new information collection requirements that are subject to review and approval by OMB under the Paperwork Reduction Act of 1995 (Pub. L. 104–13, 44 U.S.C. Chapter 35). The Department of Labor reported the information collection burdens associated with the Newborns' Act in the interim rules (Interim Rules Amending ERISA Disclosure Requirements for Group Health Plans) implementing section 711(d) of ERISA that were published in the **Federal Register** on April 8, 1997 (62 FR 16979). OMB approved the information collection under OMB Control Number 1210–0039, expiring on March 31, 2010.

2. Department of Health and Human Services

These rules contain no new information collection requirements that are subject to review and approval by OMB under the Paperwork Reduction Act of 1995 (Pub. L. 104–13, 44 U.S.C. Chapter 35). HHS reported the information collection burdens associated with the Newborns' Act in the interim rules (Information Collection Requirements Referenced in HIPAA for the Group Market, Supporting Regulations 45 CFR 146), published in the **Federal Register** on April 8, 1997. These collection requirements were approved under OMB Control Number 0938–0702, expiring on August 31, 2009.

Special Analyses—Department of the Treasury

Notwithstanding the determinations of the Departments of Labor and of Health and Human Services, for purposes of the Department of the Treasury it has been determined that this Treasury decision is not a significant regulatory action. Therefore, a regulatory assessment is not required. It has also been determined that section 553(b) of the Administrative Procedure Act (5 U.S.C. chapter 5) does not apply to these Treasury regulations, and, because these regulations do not impose a collection of information on small entities, a Regulatory Flexibility Analysis under the Regulatory Flexibility Act (5 U.S.C. chapter 6) is not required. Pursuant to section 7805(f) of the Code, the notice of proposed rulemaking preceding these regulations was submitted to the Small Business Administration for comment on its impact on small business.

Congressional Review Act

These regulations are subject to the Congressional Review Act provisions of the Small Business Regulatory Enforcement Fairness Act of 1996 (5 U.S.C. 801 *et seq.*) and have been transmitted to Congress and the Comptroller General for review. These regulations, however, are considered a ''major rule,'' as that term is defined in 5 U.S.C. 804, because they are likely to result in an annual effect on the economy of $100 million or more.

Unfunded Mandates Reform Act

For purposes of the Unfunded Mandates Reform Act of 1995 (Pub. L. 104–4), as well as Executive Order 12875, these regulations do not include any federal mandate that may result in expenditures by state, local, or tribal governments,[10] however, they include mandates which may impose an annual burden of $100 million or more on the private sector, updated annually for inflation. After applying the most

[8] Departments' estimates using the 2005 Medical Expenditures Panel Survey Household Component (MEPS–HC), the 2006 Medical Expenditures Panel Survey Insurance Component (MEPS–IC) and the National Centers for Disease Control and Prevention (CDC) National Hospital Discharge Survey: 2005 Annual Summary with Detailed Diagnosis and Procedure Data determined that of participants affected by the regulation, 11 percent were enrolled in small plans. Costs born by small plans were 11 percent of all costs.

[9] Estimates are based on the 2006 MEPS–IC. It should be noted, however, that the Pregnancy Discrimination Act of 1978 allows firms with less than 15 employees that offer health insurance to exclude maternity care. The 2000 Mercer/Foster Higgins National Survey of Employer Sponsored Health Plans found that 7 percent of firms with 10–24 employees did not offer such benefits, but the survey did not examine smaller firms. Rough estimates by the Departments suggest that the share of firms with 9 or fewer employees that offer health benefits but exclude maternity benefits is 21 percent. As the cost of these benefits rises, this share is likely to increase which, while having a small effect on the number of participants affected by the regulation, might significantly decrease the number of small plans affected by the regulation.

[10] Nonfederal governmental plans can opt-out of these requirements and it was assumed that those States that had rules in place that supplanted the Newborns' Act (that is, all States except one) would.

current gross domestic product implicit price deflator in 2008, that threshold is approximately $130 million.

Federalism Statement Under Executive Order 13132—Department of Labor and Department of Health and Human Services

Executive Order 13132 outlines fundamental principles of federalism. It requires adherence to specific criteria by federal agencies in formulating and implementing policies that have ''substantial direct effects'' on the States, the relationship between the national government and States, or on the distribution of power and responsibilities among the various levels of government. Federal agencies promulgating regulations that have these federalism implications must consult with State and local officials, and describe the extent of their consultation and the nature of the concerns of State and local officials in the preamble to the regulation.

In the Departments' view, these final regulations have federalism implications because they may have substantial direct effects on the States, the relationship between the national government and States, or on the distribution of power and responsibilities among the various levels of government. However, in the Departments' view, the federalism implications of these final regulations are substantially mitigated because, with respect to health insurance issuers, all but one of the States have requirements that prescribe benefits for hospital lengths of stay in connection with childbirth that satisfy the Newborns' Act hospital length of stay requirements.

In general, through section 514, ERISA supersedes State laws to the extent that they relate to any covered employee benefit plan, but preserves State laws that regulate insurance. At the same time, however, ERISA prohibits States from regulating a plan as an insurance company. HIPAA added a new section to ERISA (as well as to the PHS Act and the Code) narrowly preempting State requirements for issuers of group health insurance coverage.[11] HIPAA's conference report states that the conferees intended only the narrowest preemption of State laws with regard to health insurance issuers. H.R. Conf. Rep. No. 736, 104th Cong. 2d Session 205 (1996).

The Newborns' Act also added a new section to ERISA (and to the PHS Act and the Code) which provides that the federal requirements applicable to group health plans and health insurance issuers concerning hospital lengths of stay for mothers and newborns following childbirth do not apply if State law meets one or more of three specific criteria in the statute.[12] The accompanying conference report states that it is the intent of the conferees that States may impose more favorable requirements for the treatment of maternity coverage under health insurance coverage than required by the Newborns' Act. H.R. Conf. Rep. No. 104–812, 104th Cong. 2d Session 88 (1996).

Guidance conveying the Newborns' Act hospital length of stay requirements was published in the **Federal Register** on October 27, 1998 (63 FR 57546). These final regulations clarify and implement the statute's minimum standards and do not significantly reduce the discretion given the States by the statute. Moreover, the Departments understand that all but one State have requirements that prescribe benefits for hospital lengths of stay in connection with childbirth that satisfy the Newborns' Act requirements.

The Newborns' Act modified HIPAA's framework to provide that the States have primary responsibility for enforcement of the provisions of the Newborns' Act as they pertain to issuers, but that the Secretary of Health and Human Services must enforce any provision that a State fails to substantially enforce. To date, CMS enforces the Newborns' Act hospital length of stay requirements in only one State. When exercising its responsibility to enforce the Newborns' Act provisions, CMS works cooperatively with the State for the purpose of addressing the State's concerns and avoiding conflicts with the exercise of State authority. CMS has developed procedures to implement its enforcement responsibilities, and to afford the States the maximum opportunity to enforce the Newborns' Act requirements in the first instance. CMS procedures address the handling of reports that States may not be enforcing the Newborns' Act requirements, and the mechanism for allocating responsibility between the States and CMS. In compliance with Executive Order 13132's requirement that agencies examine closely any policies that may have federalism implications or limit the policymaking discretion of the States, the Department of Labor and CMS have consulted and worked cooperatively with affected State and local officials.

For example, the Departments sought and received input from State insurance regulators and the National Association of Insurance Commissioners (NAIC). The NAIC is a non-profit corporation established by the insurance commissioners of the 50 States, the District of Columbia, and the four U.S. territories. In most States the insurance commissioner is appointed by the governor; in approximately 14 States, the insurance commissioner is an elected official. Among other activities, it provides a forum for the development of uniform policy when uniformity is appropriate. Its members meet, discuss and offer solutions to mutual problems. The NAIC sponsors quarterly meetings to provide a forum for the exchange of ideas and in-depth consideration of insurance issues by regulators, industry representatives and consumers. CMS and Department of Labor staff have consistently attended these quarterly meetings to listen to the views of the State insurance departments.

In addition, the Departments informally consulted with the NAIC in developing the interim final regulations. Through the NAIC, the Departments sought and received the input of State insurance departments regarding preemption of State laws, applicability of the Newborns' Act provisions, and certain insurance industry definitions (*e.g.*, attending provider). In general, these final regulations do not change the interim final rules. Significantly, the Departments received only eleven formal comment letters on the interim final regulation, none of which were from or on behalf of the NAIC or any of the States.

The Departments have also cooperated with the States in several ongoing outreach initiatives, through which information is shared among federal regulators, State regulators and the regulated community. In particular, the Department of Labor has established a Health Benefits Education Campaign with more than 70 partners, including CMS, NAIC and many business and consumer groups. CMS has sponsored conferences with the States—the Consumer Outreach and Advocacy

[11] The Newborns' Act was incorporated into the administrative framework established by HIPAA.

[12] The federal requirements concerning hospital lengths of stay in connection with childbirth do not apply with respect to health insurance coverage if state law requires (1) such coverage to provide for at least a 48-hour hospital length of stay following a vaginal delivery and at least a 96-hour length of stay following a delivery by cesarean section, (2) such coverage to provide for maternity and pediatric care in accordance with guidelines established by the American College of Obstetricians and Gynecologists, the American Academy of Pediatrics, or other established professional medical associations, or (3) in connection with such coverage for maternity care, that the hospital length of stay for such care is left to the decision of (or is required to be made by) the attending provider in consultation with the mother.

conferences in March 1999 and June 2000, and the Implementation and Enforcement of HIPAA National State-Federal Conferences in August 1999, 2000, 2001, 2002, and 2003. Furthermore, both the Department of Labor and CMS Web sites offer links to important State Web sites and other resources, facilitating coordination between the State and federal regulators and the regulated community.

Throughout the process of developing these regulations, to the extent feasible within the specific preemption provisions of HIPAA and the Newborns' Act, the Departments have attempted to balance the States' interests in regulating health insurance issuers, and Congress' intent to provide uniform minimum protections to consumers in every State. By doing so, it is the Departments' view that they have complied with the requirements of Executive Order 13132.

Pursuant to the requirements set forth in Section 8(a) of Executive Order 13132, and by the signatures affixed to these final regulations, the Departments certify that the Employee Benefits Security Administration and the Centers for Medicare & Medicaid Services have complied with the requirements of Executive Order 13132 for the attached Final Regulations for Group Health Plans and Health Insurance Issuers Under the Newborns' and Mothers' Health Protection Act (RIN 1210–AA63 and RIN 0938–AI17), in a meaningful and timely manner.

Unified Analysis of Costs and Benefits

1. Introduction

The Newborns' Act's provisions generally prohibit group health plans and health insurance issuers from: (1) Limiting hospital lengths of stay in connection with childbirth to less than 48 hours for vaginal deliveries and 96 hours for cesarean sections, and (2) requiring preauthorization for the 48/96 hour stays. The primary effect and intent of the provision is to reduce postpartum complications associated with premature discharge.

These regulations draw on the Departments' authority to clarify and interpret the Newborns' Act's statutory provisions in order to secure the protections intended by Congress for newborns and mothers. The Departments crafted them to satisfy this mandate in as economically efficient a manner as possible, and believe that the economic benefits of the regulations justify their costs. This conclusion takes into account both the effect of the statute and the impact of the discretion exercised in the regulations.

This regulation is needed to clarify and interpret the Newborns' Act provisions under section 711 of ERISA, sections 2704 and 2751 of the PHS Act, and section 9811 of the Internal Revenue Code and to ensure that group health plans and health insurance issuers subject to these rules do not impermissibly restrict benefits or require preauthorization for 48-hour or 96-hour hospital lengths of stay in connection with childbirth.

2. Costs and Benefits of the Statute

The Departments provide qualitative assessments of the nature of the costs and benefits that are expected to derive from the statutory provisions of the Newborns' Act. In addition, the Departments provide summaries of any credible, empirical estimates of these effects that are available.

In order to determine how many plan participants could benefit from the Newborns' Act provision, the Departments considered the estimated 2.8 million births in 2005 by women with private health insurance.[13] Of these, approximately 55.0 percent are assumed to be normal, healthy deliveries, and therefore eligible for early discharge.[14] Because legislation has been passed in every state but Wisconsin, the Departments limited their analysis to participants in self-insured group health plans throughout the country and all health plans within Wisconsin. Finally, because Health Maintenance Organizations (HMOs) have traditionally had more aggressive short-stay policies, the share of workers enrolled in HMOs versus commercial plans was taken into account as were the share of those plans with short-stay policies.[15]

Based on these assumptions, approximately 328,000 births or roughly 22 percent of healthy births by privately insured women would be affected by the provision.[16] If each woman then stayed the maximum period outlined in the statute, approximately 348,000 additional days of hospital care would be required.[17] Assuming hospitals charge $800 per day for postpartum care, the annual cost of the provision would be $279 million: $1.7 million of which would be attributable to the individual market in Wisconsin; the remaining $276.9 million would be attributable to the group market in Wisconsin and self-funded plans throughout the country. However, because the statute does not require a 48- or 96-hour stay, but instead gives the decision-making authority to the attending physician in consultation with the mother, it is expected that not all of these births will result in additional hospital time. If only one-half of affected mothers had their stays extended by the full amount, the annual cost of the provision would be $139 million, less than $1 million of which would be attributable to the individual market of Wisconsin.[18]

[13] Departments' estimate based on the 2005 MEPS–HC and the 2005 CDC Survey.

[14] The CDC reported that of the 4.0 million births in 2005, 2.2 million, or 55.0 percent of those newborns were categorized as without any illness or risk-related diagnosis (*e.g.* jaundice, respiratory distress, disorders relating to short gestation and low birth weight). No data are available on whether health of newborns varies by mothers' insurance status, although insured mothers are more likely to receive prenatal care and this would be expected to positively affect the share of ''healthy'' births (see Susan Egerter *et al.*, ''Timing of Insurance Coverage and Use of Prenatal Care Among Low-Income Women,'' *American Journal of Public Health,* v. 92(3): 423–427).

[15] Julie A. Gazmararian & Jeffrey Koplan found in, ''Length-of-Stay After Delivery: Managed Care versus Fee for Service,'' *Health Affairs,* v. 15(4): 74–80, that 35.9 percent of enrollees in commercial plans were discharged within one day after delivery compared to 57.7 percent from commercial HMOs. The shares of individuals enrolled in HMOs at self-insured and fully-insured plans were taken from the 2007 Kaiser Family Foundation's Survey of Employer Sponsored Insurance.

[16] The number of women age 10–54 with private insurance was estimated using the 2005 MEPS–HC. Fertility rates for different age brackets were taken from the 2005 CDC National Hospital Discharge Survey and were interacted with the number of privately insured women to ascertain the number of births by insured women. This was then interacted with the share of infants that were born healthy, as reported in the 2005 CDC report, to determine the number of healthy births to privately-insured women.

To restrict the number of privately insured women having healthy births to those with ESI, the share of all privately insured women, age 10–54, that had ESI was taken from the 2007 March CPS and interacted with the above number. To then discern the number of births that would be covered by the regulation, the 2006 MEPS–IC was used to ascertain the share of employees in ESI that were in self-insured plans that had maternal coverage. This number was further interacted by the share of employees in the share of those employees in HMO versus non-HMO health plans as provided by the 2007 Kaiser Family Foundation's Employer Health Benefits Survey.

Interacting all of these numbers results in the 328,000 number cited in the text.

[17] Based on 1995 discharge rates, approximately 94 percent of the 328,000 births required one additional day to meet the maximum period outlined by the statute; 6 percent required two additional days.

[18] The Congressional Budget Office (CBO) analyzed Senate proposal S. 969, which was an earlier version of the Newborns' Act. CBO estimated 900,000 insured births had stays shorter than the minimum specified in the bill, which would result in 400,000 additional inpatient days and an additional 200,000 additional out-patient visits at an annual cost of $360 million in 2007 dollars (or $800 for each additional day of inpatient care; $200 for outpatient care). The Departments' estimate is significantly less, primarily due to: (1) A large number of states either clarifying existing policies for short-stay deliveries or enacting new ones which supersede the federal statute for all but self-insured plans; and (2) the CBO estimates included costs for

Continued

While the Departments estimate that the cost of the NMHPA is as much as $279 million annually, health plans are estimated to have spent more than $775 billion in 2007 to cover approximately 201.7 million privately insured individuals.[19] Therefore, the upper estimate of the costs under the Newborns' Act's provisions represent a very small fraction of one percent of total health plan expenditures.

Moreover, the cost of this provision is likely to decline in the future, despite increases in overall health care spending. Since the statute was passed, there has been a significant increase in the number of cesarean births, compared to vaginal births. While traditionally cesarean births are associated with higher risk, an increasing number of women are now electing to have the procedure.[20] Women who elect to have a cesarean would presumably have a lower risk than those for whom the procedure is required and therefore may not require the prescribed 96-hour recovery period detailed in the statute.[21] If this trend continues, the burden of this statute should lessen.

The primary statutory economic benefits associated with the Newborns' Act's provisions derive from an increase in access to health plan coverage for postpartum care and monitoring of mothers and their newborns. Individuals without coverage for this care and monitoring are less likely to remain in the hospital for fear of incurring expenses that must be paid for 'out-of-pocket.' Lower-income individuals are more likely to forego care not covered by their insurance. Foregoing this care and monitoring increases the risk of adverse health outcomes, which in turn generates higher medical costs. Much of these costs may be shifted to public funding sources (and therefore to taxpayers) or to other payers.[22]

Foregoing appropriate care can also negatively affect the quality of life. Improved access to health coverage for mothers and newborns will lead to more appropriate medical care and monitoring, better health outcomes, and improved quality of life.[23] Denied coverage, individuals must choose whether to pay for the extra day(s) in the hospital and potentially suffer economic hardship or forego the care and monitoring, creating a risk of an adverse health outcome. Gaining coverage will sometimes mean receiving high quality care and living healthier lives.[24]

The provisions of the Newborns' Act and its regulation generally apply to both group health plans and health insurance issuers. While the costs of the Newborns' Act are substantial, economic theory predicts that issuers will pass their costs of compliance back to plans, and that plans may shift some or all of issuers' and their own costs of compliance to participants either through increases in premiums, increased cost-sharing, or reducing the richness of non-mandated health benefits.[25]

While 74 million individuals are enrolled in group or private health plans, only 15 million individuals are enrolled in plans that had policies affected by the Newborns' Act. Of these, only 328,000 individuals are expected to be annually directly impacted and receive additional coverage they were previously denied or restricted for 48 or

follow-up visits, a requirement that was dropped from the federal statute.

[19] The Departments' estimate is based on the Office of the Actuary at the Centers for Medicare & Medicaid Services (CMS) projected measure of total personal health expenditures by private health insurance in 2007.

[20] The share of all births that are cesarean rose from 20.7 percent in 1996 to an estimated 31.3 percent in 2005 (CDC (2005). ''National Hospital Discharge Survey'' *Vital and Health Statistics,* Series 13 (162)). A study by Health Grades Inc. found a 36.6 percent increase in the number of ''patient choice'' cesarean sections between 2001 and 2003.

[21] Most research comparing complication rates of cesarean to vaginal births focus on those women who previously had a cesarean section, as insufficient data are available to compare initial vaginal versus initial elected cesarean deliveries. As such, it is difficult to discern how the medically advisable stay of an elected cesarean section compares to that of an uncomplicated vaginal birth. However, there is much agreement that emergency cesarean sections, which typically follow a lengthy labor, are far more dangerous to mother and child than the elected variety. Given the Newborns' Act's prescribed 96-hour stays for cesarean births when elected cesareans comprised a smaller share of all cesareans, it would be reasonable to expect that the stays for elected cesareans may fall over time.

[22] For more information on health choices of lower-income individuals, see: Trude, Sally (2003). ''Patient Cost Sharing: How Much is Too Much,'' *Health System Change Issue Brief,* no. 72 (December).

[23] For more detailed information, see: O'Brien, Ellen (2003). ''Employer Benefits from Workers' Health Insurance,'' *Milbank Quarterly,* Vol. 1 No. 1. O'Brien provides an extensive analysis of the literature on benefits accruing to employers from offering health benefits and the costs to employers of unhealthy employees, as well as information on studies demonstrating that poor health may be related to lower productivity. In particular, she discusses studies that have examined the effects on workplace productivity of specific health conditions and shows that poor health reduces workers' productivity at work, and that effective health care treatments can reduce productivity losses and may even pay for themselves in terms of increased productivity.

[24] Research on the benefits of longer stays has been somewhat mixed. Some studies show short-stays to be correlated with decreased follow-up care and increased re-hospitalization, particularly for low-income families, which will ultimately increase societal costs (for further discussion, see: Galbraith, Alison A. *et al.* (2003) ''Newborn Early Discharge Revisited: Are California Newborns Receiving Recommended Postnatal Services?'' *Pediatrics,* vol. 111 (2): p. 364–371; Lock, Michael & Joel G. Ray. (1999) ''Higher Neonatal Morbidity after Routine Hospital Discharge: Are We Sending Newborns Home Too Early?'' *Canadian Medical Association Journal,* vol. 161 (3): p. 249–253; Malkin, Jesse D. *et al.* (2003) ''Postpartum Length of Stay and Newborn Health: A Cost-Effectiveness Analysis,'' Pediatrics, vol. 111 (4): p. 316–322).

Since the statutes have been in place, other studies have argued that higher re-hospitalization rates found in short-stay newborns are due to more frequent post-stay evaluations in the four days following birth, considered the critical window for ascertaining newborn health, as mandated in health plans. Once new regulations were passed extending stays, health plans reduced their follow-up care policies and newborns were less likely to be examined in the days following discharge. This could result in an increase in costs. (For further discussion, see: Hyman, David A. (2001) ''What Lessons Should We Learn from Drive-Through Deliveries?'' *Pediatrics,* vol. 107 (2): 406–408; Madden, Jeanne M. *et al.* (2002) ''Effects of a Law Against Early Postpartum Discharges on Newborn Follow-up, Adverse Events, and HMO Expenditures,'' *New England Journal of Medicine,* vol. 347 (25): p. 2031–2038; Madden, Jeanne M. *et al.* (2004) ''Length-of-Stay Policies and Ascertainment of Postdischarge Problems in Newborns,'' *Pediatrics,* vol. 113 (1): p. 42–49.)

The Departments believe, however, that because most of the complications of newborns manifest themselves within the immediate 48 hours following birth, special protection much be given to that period. Moreover, since the decision to discharge the patients will be made by the doctor, in consultation with the mother, many of the concerns posed by those who oppose extended stays will be factored into that decision. As such, the Departments believe that the Newborns' Act will improve the health and welfare of mothers and newborns.

[25] The voluntary nature of the employment-based health benefit system in conjunction with the open and dynamic character of labor markets make explicit as well as implicit negotiations on compensation a key determinant of the prevalence of employee benefits coverage. It is likely that 80% to 100% of the cost of employee benefits is borne by workers through reduced wages (See for example: Jonathan Gruber and Alan B. Krueger, ''The Incidence of Mandated Employer-Provided Insurance: Lessons from Workers Compensation Insurance,'' *Tax Policy and Economy* (1991); Jonathan Gruber, ''The Incidence of Mandated Maternity Benefits,'' *American Economic Review,* Vol. 84 (June 1994), pp. 622–641; Lawrence H. Summers, ''Some Simple Economics of Mandated Benefits,'' *American Economic Review,* Vol. 79, No. 2 (May 1989); Louise Sheiner, ''Health Care Costs, Wages, and Aging,'' Federal Reserve Board of Governors working paper, April 1999; and Edward Montgomery, Kathryn Shaw, and Mary Ellen Benedict, ''Pensions and Wages: An Hedonic Price Theory Approach,'' *International Economic Review,* Vol. 33, No. 1, Feb. 1992). The prevalence of benefits is therefore largely dependent on the efficacy of this exchange. If workers perceive that there is the potential for inappropriate denial of benefits they will discount their value to adjust for this risk. This discount drives a wedge in the compensation negotiation, limiting its efficiency. With workers unwilling to bear the full cost of the benefit, fewer benefits will be provided. The extent to which workers perceive a federal regulation supported by enforcement authority to improve the security and quality of benefits, the differential between the employers' costs and workers' willingness to accept wage offsets is minimized.

96-hour hospital stays following childbirth. Though these benefits are received by a small number of plan enrollees, the costs are distributed broadly among all plan participants. As a result, the cost of the Newborns' Act per individual enrollee is expected to be minimal—between 9 and 19 dollars per person for those enrolled in affected plans.[26] While it is possible that some enrollees on the margin will decline coverage in response to cost increases, the number of those acting in such a manner is expected to be negligible. As such, the benefits of this statute are believed to justify its costs.

3. Costs and Benefits of the Rules Applicable to the Newborns' Act

The interim final rule clarified when a stay begins under the Newborns' Act. Prior to this, private health plans could use the expectant mother's admittance time to determine the required stay, an assumption that consistently reduced the number of women experiencing stays less than those prescribed by the statute by 5 percent.[27] By clarifying this assumption in the interim final rule, the number of stays that would have been shorter than 48/96 hours increased by approximately 16,000 for all plans, and by approximately 2,000 for small plans. This in turn raised the direct costs to health plans by 5 percent (from $265 to $279 million for the upper bound for all plans and from $29 to $31 million for small plans). However, because it can take several hours for certain conditions to present themselves, such as jaundice and dehydration, the additional hours of hospital supervision—gained by generally not using an expectant mother's admittance time as the start of a stay—can be critical. Therefore, the benefits of this clarification should justify this additional cost.

The regulation also defines that for births occurring outside of a hospital, stays begin once the mother or newborn is admitted as a hospital inpatient in connection with childbirth, as defined by the attending provider. The Departments lack any firm basis for quantifying the number of individuals likely to be affected by this provision, and therefore are unable to quantify the increase in costs and benefits. However, given the special and narrow circumstances to which this provision applies, costs and benefits are expected to be small.

Statutory Authority

The Department of the Treasury final rule is adopted pursuant to the authority contained in sections 7805 and 9833 of the Code (26 U.S.C. 7805, 9833).

The Department of Labor final rule is adopted pursuant to the authority contained in 29 U.S.C. 1027, 1059, 1135, 1161–1168, 1169, 1181–1183, 1181 note, 1185, 1185a, 1185b, 1191, 1191a, 1191b, and 1191c, sec. 101(g), Public Law 104–191, 110 Stat. 1936; sec. 401(b), Public Law 105–200, 112 Stat. 645 (42 U.S.C. 651 note); Secretary of Labor's Order 1–2003, 68 FR 5374 (Feb. 3, 2003).

The Department of Heath and Human Services final rule is adopted pursuant to the authority contained in sections 2701 through 2763, 2791, and 2792 of the PHS Act (42 U.S.C. 300gg through 300gg–63, 300gg–91, and 300gg–92), as amended by Public Law 104–191, 110 Stat. 1936, Public Law 104–204, 110 Stat. 2935 and Public Law 105–277, 112 Stat. 2681–436.

Accounting Statement

In accordance with OMB Circular A–4 (available at *http://www.whitehouse.gov/omb/circulars/a004/a-4.pdf),* in the table below, we have prepared an accounting statement showing the classification of the expenditures associated with the provisions of this final rule. This table provides our best estimate for the annual costs associated with enacting the federal minimum stay final regulation.

ACCOUNTING STATEMENT: CLASSIFICATION OF ESTIMATED EXPENDITURES, CY2008

[In millions]

Category	Cost estimates	
	Low	High
Annualized Monetized Costs	$139.30	$278.50

List of Subjects

26 CFR Part 54

Excise taxes, Health care, Health insurance, Pensions, Reporting and recordkeeping requirements.

29 CFR Part 2590

Continuation coverage, Disclosure, Employee benefit plans, Group health plans, Health care, Health insurance, Medical child support, Reporting and recordkeeping requirements.

45 CFR Part 146

Health care, Health insurance, Reporting and recordkeeping requirements, State regulation of health insurance.

45 CFR Part 148

Administrative practice and procedure, Health care, Health insurance, Penalties, Reporting and recordkeeping requirements.

Adoption of Amendments to the Regulations

Internal Revenue Service

26 CFR Chapter I

■ Accordingly, 26 CFR Part 54 is amended as follows:

PART 54—PENSION EXCISE TAXES

■ **Paragraph 1.** The authority citation for part 54 is amended by adding an entry for § 54.9811–1 in numerical order and by removing the entry for § 54.9811–1T to read in part as follows:

Authority: 26 U.S.C. 7805 * * *

Section 54.9811–1 also issued under 26 U.S.C. 9833. * * *

§ 54.9801–1 [Amended]

■ **Par. 2.** Section 54.9801–1(a) is amended by removing the language ''54.9811–1T'' and adding ''54.9811–1'' in its place.

[26] The total cost of the regulation was calculated by estimating the number of additional days in the hospital that short-stay deliveries would require under the statute. This number was then multiplied by $800, to reflect the per day hospitalization cost of a mother (this was a CBO number indexed to 2007 dollars). Having calculated the total cost of the regulation at $279 million (and a lower bound of $139 million), these numbers were then divided by the number of participants in affected health plans (a total of 15 million) to get an upper ($19) and lower bound ($9) of the per-participant cost of the regulation.

[27] Departments' estimate based on the CDC's 2005 Survey, Tables 37 and 42. The Departments looked at the share of stays that would be labeled ''short'' for both mothers and newborns in 1995 (before any part of the statute was enforced) and found that the share of newborns with a ''short stay'' was 5 percent higher. It was therefore assumed that starting the clock at the birth of a child would increase the number of ''short stays'' by 5 percent.

§ 54.9801–2 [Amended]

■ **Par. 3.** In § 54.9801–2, the introductory paragraph before the definitions is amended by removing the language ''54.9811–1T'' and adding ''54.9811–1'' in its place.

■ **Par. 4.** Section 54.9811–1 is added to read as follows:

§ 54.9811–1 Standards relating to benefits for mothers and newborns.

(a) *Hospital length of stay*—(1) *General rule.* Except as provided in paragraph (a)(5) of this section, a group health plan that provides benefits for a hospital length of stay in connection with childbirth for a mother or her newborn may not restrict benefits for the stay to less than—

(i) 48 hours following a vaginal delivery; or

(ii) 96 hours following a delivery by cesarean section.

(2) *When stay begins*—(i) *Delivery in a hospital.* If delivery occurs in a hospital, the hospital length of stay for the mother or newborn child begins at the time of delivery (or in the case of multiple births, at the time of the last delivery).

(ii) *Delivery outside a hospital.* If delivery occurs outside a hospital, the hospital length of stay begins at the time the mother or newborn is admitted as a hospital inpatient in connection with childbirth. The determination of whether an admission is in connection with childbirth is a medical decision to be made by the attending provider.

(3) *Examples.* The rules of paragraphs (a)(1) and (2) of this section are illustrated by the following examples. In each example, the group health plan provides benefits for hospital lengths of stay in connection with childbirth and is subject to the requirements of this section, as follows:

Example 1. (i) *Facts.* A pregnant woman covered under a group health plan goes into labor and is admitted to the hospital at 10 p.m. on June 11. She gives birth by vaginal delivery at 6 a.m. on June 12.

(ii) *Conclusion.* In this *Example 1,* the 48-hour period described in paragraph (a)(1)(i) of this section ends at 6 a.m. on June 14.

Example 2. (i) *Facts.* A woman covered under a group health plan gives birth at home by vaginal delivery. After the delivery, the woman begins bleeding excessively in connection with the childbirth and is admitted to the hospital for treatment of the excessive bleeding at 7 p.m. on October 1.

(ii) *Conclusion.* In this *Example 2,* the 48-hour period described in paragraph (a)(1)(i) of this section ends at 7 p.m. on October 3.

Example 3. (i) *Facts.* A woman covered under a group health plan gives birth by vaginal delivery at home. The child later develops pneumonia and is admitted to the hospital. The attending provider determines that the admission is not in connection with childbirth.

(ii) *Conclusion.* In this *Example 3,* the hospital length-of-stay requirements of this section do not apply to the child's admission to the hospital because the admission is not in connection with childbirth.

(4) *Authorization not required*—(i) *In general.* A plan may not require that a physician or other health care provider obtain authorization from the plan, or from a health insurance issuer offering health insurance coverage under the plan, for prescribing the hospital length of stay specified in paragraph (a)(1) of this section. (See also paragraphs (b)(2) and (c)(3) of this section for rules and examples regarding other authorization and certain notice requirements.)

(ii) *Example.* The rule of this paragraph (a)(4) is illustrated by the following example:

Example. (i) *Facts.* In the case of a delivery by cesarean section, a group health plan subject to the requirements of this section automatically provides benefits for any hospital length of stay of up to 72 hours. For any longer stay, the plan requires an attending provider to complete a certificate of medical necessity. The plan then makes a determination, based on the certificate of medical necessity, whether a longer stay is medically necessary.

(ii) *Conclusion.* In this *Example,* the requirement that an attending provider complete a certificate of medical necessity to obtain authorization for the period between 72 hours and 96 hours following a delivery by cesarean section is prohibited by this paragraph (a)(4).

(5) *Exceptions*—(i) *Discharge of mother.* If a decision to discharge a mother earlier than the period specified in paragraph (a)(1) of this section is made by an attending provider, in consultation with the mother, the requirements of paragraph (a)(1) of this section do not apply for any period after the discharge.

(ii) *Discharge of newborn.* If a decision to discharge a newborn child earlier than the period specified in paragraph (a)(1) of this section is made by an attending provider, in consultation with the mother (or the newborn's authorized representative), the requirements of paragraph (a)(1) of this section do not apply for any period after the discharge.

(iii) *Attending provider defined.* For purposes of this section, attending provider means an individual who is licensed under applicable state law to provide maternity or pediatric care and who is directly responsible for providing maternity or pediatric care to a mother or newborn child. Therefore, a plan, hospital, managed care organization, or other issuer is not an attending provider.

(iv) *Example.* The rules of this paragraph (a)(5) are illustrated by the following example:

Example. (i) *Facts.* A pregnant woman covered under a group health plan subject to the requirements of this section goes into labor and is admitted to a hospital. She gives birth by cesarean section. On the third day after the delivery, the attending provider for the mother consults with the mother, and the attending provider for the newborn consults with the mother regarding the newborn. The attending providers authorize the early discharge of both the mother and the newborn. Both are discharged approximately 72 hours after the delivery. The plan pays for the 72-hour hospital stays.

(ii) *Conclusion.* In this *Example,* the requirements of this paragraph (a) have been satisfied with respect to the mother and the newborn. If either is readmitted, the hospital stay for the readmission is not subject to this section.

(b) *Prohibitions*—(1) *With respect to mothers*—(i) *In general.* A group health plan may not—

(A) Deny a mother or her newborn child eligibility or continued eligibility to enroll or renew coverage under the terms of the plan solely to avoid the requirements of this section; or

(B) Provide payments (including payments-in-kind) or rebates to a mother to encourage her to accept less than the minimum protections available under this section.

(ii) *Examples.* The rules of this paragraph (b)(1) are illustrated by the following examples. In each example, the group health plan is subject to the requirements of this section, as follows:

Example 1. (i) *Facts.* A group health plan provides benefits for at least a 48-hour hospital length of stay following a vaginal delivery. If a mother and newborn covered under the plan are discharged within 24 hours after the delivery, the plan will waive the copayment and deductible.

(ii) *Conclusion.* In this *Example 1,* because waiver of the copayment and deductible is in the nature of a rebate that the mother would not receive if she and her newborn remained in the hospital, it is prohibited by this paragraph (b)(1). (In addition, the plan violates paragraph (b)(2) of this section because, in effect, no copayment or deductible is required for the first portion of the stay and a double copayment and a deductible are required for the second portion of the stay.)

Example 2. (i) *Facts.* A group health plan provides benefits for at least a 48-hour hospital length of stay following a vaginal delivery. In the event that a mother and her newborn are discharged earlier than 48 hours and the discharges occur after consultation with the mother in accordance with the requirements of paragraph (a)(5) of this section, the plan provides for a follow-up visit by a nurse within 48 hours after the discharges to provide certain services that the mother and her newborn would otherwise receive in the hospital.

(ii) *Conclusion.* In this *Example 2,* because the follow-up visit does not provide any services beyond what the mother and her newborn would receive in the hospital, coverage for the follow-up visit is not prohibited by this paragraph (b)(1).

(2) *With respect to benefit restrictions*—(i) *In general.* Subject to paragraph (c)(3) of this section, a group health plan may not restrict the benefits for any portion of a hospital length of stay specified in paragraph (a) of this section in a manner that is less favorable than the benefits provided for any preceding portion of the stay.

(ii) *Example.* The rules of this paragraph (b)(2) are illustrated by the following example:

Example. (i) *Facts.* A group health plan subject to the requirements of this section provides benefits for hospital lengths of stay in connection with childbirth. In the case of a delivery by cesarean section, the plan automatically pays for the first 48 hours. With respect to each succeeding 24-hour period, the participant or beneficiary must call the plan to obtain precertification from a utilization reviewer, who determines if an additional 24-hour period is medically necessary. If this approval is not obtained, the plan will not provide benefits for any succeeding 24-hour period.

(ii) *Conclusion.* In this *Example,* the requirement to obtain precertification for the two 24-hour periods immediately following the initial 48-hour stay is prohibited by this paragraph (b)(2) because benefits for the latter part of the stay are restricted in a manner that is less favorable than benefits for a preceding portion of the stay. (However, this section does not prohibit a plan from requiring precertification for any period after the first 96 hours.) In addition, the requirement to obtain precertification from the plan based on medical necessity for a hospital length of stay within the 96-hour period would also violate paragraph (a) of this section.

(3) *With respect to attending providers.* A group health plan may not directly or indirectly—

(i) Penalize (for example, take disciplinary action against or retaliate against), or otherwise reduce or limit the compensation of, an attending provider because the provider furnished care to a participant or beneficiary in accordance with this section; or

(ii) Provide monetary or other incentives to an attending provider to induce the provider to furnish care to a participant or beneficiary in a manner inconsistent with this section, including providing any incentive that could induce an attending provider to discharge a mother or newborn earlier than 48 hours (or 96 hours) after delivery.

(c) *Construction.* With respect to this section, the following rules of construction apply:

(1) *Hospital stays not mandatory.* This section does not require a mother to—

(i) Give birth in a hospital; or

(ii) Stay in the hospital for a fixed period of time following the birth of her child.

(2) *Hospital stay benefits not mandated.* This section does not apply to any group health plan that does not provide benefits for hospital lengths of stay in connection with childbirth for a mother or her newborn child.

(3) *Cost-sharing rules*—(i) *In general.* This section does not prevent a group health plan from imposing deductibles, coinsurance, or other cost-sharing in relation to benefits for hospital lengths of stay in connection with childbirth for a mother or a newborn under the plan or coverage, except that the coinsurance or other cost-sharing for any portion of the hospital length of stay specified in paragraph (a) of this section may not be greater than that for any preceding portion of the stay.

(ii) *Examples.* The rules of this paragraph (c)(3) are illustrated by the following examples. In each example, the group health plan is subject to the requirements of this section, as follows:

Example 1. (i) *Facts.* A group health plan provides benefits for at least a 48-hour hospital length of stay in connection with vaginal deliveries. The plan covers 80 percent of the cost of the stay for the first 24-hour period and 50 percent of the cost of the stay for the second 24-hour period. Thus, the coinsurance paid by the patient increases from 20 percent to 50 percent after 24 hours.

(ii) *Conclusion.* In this *Example 1,* the plan violates the rules of this paragraph (c)(3) because coinsurance for the second 24-hour period of the 48-hour stay is greater than that for the preceding portion of the stay. (In addition, the plan also violates the similar rule in paragraph (b)(2) of this section.)

Example 2. (i) *Facts.* A group health plan generally covers 70 percent of the cost of a hospital length of stay in connection with childbirth. However, the plan will cover 80 percent of the cost of the stay if the participant or beneficiary notifies the plan of the pregnancy in advance of admission and uses whatever hospital the plan may designate.

(ii) *Conclusion.* In this *Example 2,* the plan does not violate the rules of this paragraph (c)(3) because the level of benefits provided (70 percent or 80 percent) is consistent throughout the 48-hour (or 96-hour) hospital length of stay required under paragraph (a) of this section. (In addition, the plan does not violate the rules in paragraph (a)(4) or (b)(2) of this section.)

(4) *Compensation of attending provider.* This section does not prevent a group health plan from negotiating with an attending provider the level and type of compensation for care furnished in accordance with this section (including paragraph (b) of this section).

(d) *Notice requirement.* See 29 CFR 2520.102–3(u) for rules relating to a disclosure requirement imposed under section 711(d) of ERISA (29 U.S.C. 1181) on certain group health plans that provide benefits for hospital lengths of stay in connection with childbirth.

(e) *Applicability in certain states*—(1) *Health insurance coverage.* The requirements of section 9811 and this section do not apply with respect to health insurance coverage offered in connection with a group health plan if there is a state law regulating the coverage that meets any of the following criteria:

(i) The state law requires the coverage to provide for at least a 48-hour hospital length of stay following a vaginal delivery and at least a 96-hour hospital length of stay following a delivery by cesarean section.

(ii) The state law requires the coverage to provide for maternity and pediatric care in accordance with guidelines that relate to care following childbirth established by the American College of Obstetricians and Gynecologists, the American Academy of Pediatrics, or any other established professional medical association.

(iii) The state law requires, in connection with the coverage for maternity care, that the hospital length of stay for such care is left to the decision of (or is required to be made by) the attending provider in consultation with the mother. State laws that require the decision to be made by the attending provider with the consent of the mother satisfy the criterion of this paragraph (e)(1)(iii).

(2) *Group health plans*—(i) *Fully-insured plans.* For a group health plan that provides benefits solely through health insurance coverage, if the state law regulating the health insurance coverage meets any of the criteria in paragraph (e)(1) of this section, then the requirements of section 9811 and this section do not apply.

(ii) *Self-insured plans.* For a group health plan that provides all benefits for hospital lengths of stay in connection with childbirth other than through health insurance coverage, the requirements of section 9811 and this section apply.

(iii) *Partially-insured plans.* For a group health plan that provides some benefits through health insurance coverage, if the state law regulating the health insurance coverage meets any of the criteria in paragraph (e)(1) of this section, then the requirements of section 9811 and this section apply only to the extent the plan provides benefits for hospital lengths of stay in connection

with childbirth other than through health insurance coverage.

(3) *Preemption provisions under section 731(a) of ERISA.* See 29 CFR 2590.711(e)(3) for a rule providing that the preemption provisions contained in section 731(a)(1) of ERISA and 29 CFR 2590.731(a) do not supersede a state law if the state law is described in paragraph (e)(1) of 29 CFR 2590.711 (which is substantially similar to paragraph (e)(1) of this section).

(4) *Examples.* The rules of this paragraph (e) are illustrated by the following examples:

Example 1. (i) *Facts.* A group health plan buys group health insurance coverage in a state that requires that the coverage provide for at least a 48-hour hospital length of stay following a vaginal delivery and at least a 96-hour hospital length of stay following a delivery by cesarean section.

(ii) *Conclusion.* In this *Example 1*, the coverage is subject to state law, and the requirements of section 9811 and this section do not apply.

Example 2. (i) *Facts.* A self-insured group health plan covers hospital lengths of stay in connection with childbirth in a state that requires health insurance coverage to provide for maternity and pediatric care in accordance with guidelines that relate to care following childbirth established by the American College of Obstetricians and Gynecologists and the American Academy of Pediatrics.

(ii) *Conclusion.* In this *Example 2*, even though the state law satisfies the criterion of paragraph (e)(1)(ii) of this section, because the plan provides benefits for hospital lengths of stay in connection with childbirth other than through health insurance coverage, the plan is subject to the requirements of section 9811 and this section.

(f) *Effective/applicability date.* This section applies to group health plans for plan years beginning on or after January 1, 2009.

§ 54.9811–1T [Removed]

■ **Par. 5.** Section 54.9811–1T is removed.

§ 54.9831–1 [Amended]

■ **Par. 6.** Section 54.9831–1(b) is amended by removing the language ''54.9811–1T'' and adding ''54.9811–1'' in its place.

Approved: September 23, 2008.

Linda E. Stiff,

Deputy Commissioner for Services and Enforcement, Internal Revenue Service.

Eric Solomon,

Assistant Secretary of the Treasury (Tax Policy).

Employee Benefits Security Administration

29 CFR Chapter XXV

■ For the reasons set forth above, 29 CFR Part 2590 is amended as follows:

PART 2590—RULES AND REGULATIONS FOR GROUP HEALTH PLANS

■ 1. The authority citation for Part 2590 continues to read as follows:

Authority: 29 U.S.C. 1027, 1059, 1135, 1161–1168, 1169, 1181–1183, 1181 note, 1185, 1185a, 1185b, 1191, 1191a, 1191b, and 1191c, sec. 101(g), Public Law 104–191, 110 Stat. 1936; sec. 401(b), Public Law 105–200, 112 Stat. 645 (42 U.S.C. 651 note); Secretary of Labor's Order 1–2003, 68 FR 5374 (Feb. 3, 2003).

■ 2. Section 2590.711 is revised to read as follows:

§ 2590.711 Standards relating to benefits for mothers and newborns.

(a) *Hospital length of stay*—(1) *General rule.* Except as provided in paragraph (a)(5) of this section, a group health plan, or a health insurance issuer offering group health insurance coverage, that provides benefits for a hospital length of stay in connection with childbirth for a mother or her newborn may not restrict benefits for the stay to less than—

(i) 48 hours following a vaginal delivery; or

(ii) 96 hours following a delivery by cesarean section.

(2) *When stay begins*—(i) *Delivery in a hospital.* If delivery occurs in a hospital, the hospital length of stay for the mother or newborn child begins at the time of delivery (or in the case of multiple births, at the time of the last delivery).

(ii) *Delivery outside a hospital.* If delivery occurs outside a hospital, the hospital length of stay begins at the time the mother or newborn is admitted as a hospital inpatient in connection with childbirth. The determination of whether an admission is in connection with childbirth is a medical decision to be made by the attending provider.

(3) *Examples.* The rules of paragraphs (a)(1) and (2) of this section are illustrated by the following examples. In each example, the group health plan provides benefits for hospital lengths of stay in connection with childbirth and is subject to the requirements of this section, as follows:

Example 1. (i) *Facts.* A pregnant woman covered under a group health plan goes into labor and is admitted to the hospital at 10 p.m. on June 11. She gives birth by vaginal delivery at 6 a.m. on June 12.

(ii) *Conclusion.* In this *Example 1*, the 48-hour period described in paragraph (a)(1)(i) of this section ends at 6 a.m. on June 14.

Example 2. (i) *Facts.* A woman covered under a group health plan gives birth at home by vaginal delivery. After the delivery, the woman begins bleeding excessively in connection with the childbirth and is admitted to the hospital for treatment of the excessive bleeding at 7 p.m. on October 1.

(ii) *Conclusion.* In this *Example 2*, the 48-hour period described in paragraph (a)(1)(i) of this section ends at 7 p.m. on October 3.

Example 3. (i) *Facts.* A woman covered under a group health plan gives birth by vaginal delivery at home. The child later develops pneumonia and is admitted to the hospital. The attending provider determines that the admission is not in connection with childbirth.

(ii) *Conclusion.* In this *Example 3*, the hospital length-of-stay requirements of this section do not apply to the child's admission to the hospital because the admission is not in connection with childbirth.

(4) *Authorization not required*—(i) *In general.* A plan or issuer is prohibited from requiring that a physician or other health care provider obtain authorization from the plan or issuer for prescribing the hospital length of stay specified in paragraph (a)(1) of this section. (See also paragraphs (b)(2) and (c)(3) of this section for rules and examples regarding other authorization and certain notice requirements.)

(ii) *Example.* The rule of this paragraph (a)(4) is illustrated by the following example:

Example. (i) *Facts.* In the case of a delivery by cesarean section, a group health plan subject to the requirements of this section automatically provides benefits for any hospital length of stay of up to 72 hours. For any longer stay, the plan requires an attending provider to complete a certificate of medical necessity. The plan then makes a determination, based on the certificate of medical necessity, whether a longer stay is medically necessary.

(ii) *Conclusion.* In this *Example*, the requirement that an attending provider complete a certificate of medical necessity to obtain authorization for the period between 72 hours and 96 hours following a delivery by cesarean section is prohibited by this paragraph (a)(4).

(5) *Exceptions*—(i) *Discharge of mother.* If a decision to discharge a mother earlier than the period specified in paragraph (a)(1) of this section is made by an attending provider, in consultation with the mother, the requirements of paragraph (a)(1) of this

section do not apply for any period after the discharge.

(ii) *Discharge of newborn.* If a decision to discharge a newborn child earlier than the period specified in paragraph (a)(1) of this section is made by an attending provider, in consultation with the mother (or the newborn's authorized representative), the requirements of paragraph (a)(1) of this section do not apply for any period after the discharge.

(iii) *Attending provider defined.* For purposes of this section, attending provider means an individual who is licensed under applicable state law to provide maternity or pediatric care and who is directly responsible for providing maternity or pediatric care to a mother or newborn child. Therefore, a plan, hospital, managed care organization, or other issuer is not an attending provider.

(iv) *Example.* The rules of this paragraph (a)(5) are illustrated by the following example:

Example. (i) *Facts.* A pregnant woman covered under a group health plan subject to the requirements of this section goes into labor and is admitted to a hospital. She gives birth by cesarean section. On the third day after the delivery, the attending provider for the mother consults with the mother, and the attending provider for the newborn consults with the mother regarding the newborn. The attending providers authorize the early discharge of both the mother and the newborn. Both are discharged approximately 72 hours after the delivery. The plan pays for the 72-hour hospital stays.

(ii) *Conclusion.* In this *Example*, the requirements of this paragraph (a) have been satisfied with respect to the mother and the newborn. If either is readmitted, the hospital stay for the readmission is not subject to this section.

(b) *Prohibitions*—(1) *With respect to mothers*—(i) *In general.* A group health plan, and a health insurance issuer offering group health insurance coverage, may not—

(A) Deny a mother or her newborn child eligibility or continued eligibility to enroll or renew coverage under the terms of the plan solely to avoid the requirements of this section; or

(B) Provide payments (including payments-in-kind) or rebates to a mother to encourage her to accept less than the minimum protections available under this section.

(ii) *Examples.* The rules of this paragraph (b)(1) are illustrated by the following examples. In each example, the group health plan is subject to the requirements of this section, as follows:

Example 1. (i) *Facts.* A group health plan provides benefits for at least a 48-hour hospital length of stay following a vaginal delivery. If a mother and newborn covered under the plan are discharged within 24 hours after the delivery, the plan will waive the copayment and deductible.

(ii) *Conclusion.* In this *Example 1*, because waiver of the copayment and deductible is in the nature of a rebate that the mother would not receive if she and her newborn remained in the hospital, it is prohibited by this paragraph (b)(1). (In addition, the plan violates paragraph (b)(2) of this section because, in effect, no copayment or deductible is required for the first portion of the stay and a double copayment and a deductible are required for the second portion of the stay.)

Example 2. (i) *Facts.* A group health plan provides benefits for at least a 48-hour hospital length of stay following a vaginal delivery. In the event that a mother and her newborn are discharged earlier than 48 hours and the discharges occur after consultation with the mother in accordance with the requirements of paragraph (a)(5) of this section, the plan provides for a follow-up visit by a nurse within 48 hours after the discharges to provide certain services that the mother and her newborn would otherwise receive in the hospital.

(ii) *Conclusion.* In this *Example 2*, because the follow-up visit does not provide any services beyond what the mother and her newborn would receive in the hospital, coverage for the follow-up visit is not prohibited by this paragraph (b)(1).

(2) *With respect to benefit restrictions*—(i) *In general.* Subject to paragraph (c)(3) of this section, a group health plan, and a health insurance issuer offering group health insurance coverage, may not restrict the benefits for any portion of a hospital length of stay specified in paragraph (a) of this section in a manner that is less favorable than the benefits provided for any preceding portion of the stay.

(ii) *Example.* The rules of this paragraph (b)(2) are illustrated by the following example:

Example. (i) *Facts.* A group health plan subject to the requirements of this section provides benefits for hospital lengths of stay in connection with childbirth. In the case of a delivery by cesarean section, the plan automatically pays for the first 48 hours. With respect to each succeeding 24-hour period, the participant or beneficiary must call the plan to obtain precertification from a utilization reviewer, who determines if an additional 24-hour period is medically necessary. If this approval is not obtained, the plan will not provide benefits for any succeeding 24-hour period.

(ii) *Conclusion.* In this *Example*, the requirement to obtain precertification for the two 24-hour periods immediately following the initial 48-hour stay is prohibited by this paragraph (b)(2) because benefits for the latter part of the stay are restricted in a manner that is less favorable than benefits for a preceding portion of the stay. (However, this section does not prohibit a plan from requiring precertification for any period after the first 96 hours.) In addition, the requirement to obtain precertification from the plan based on medical necessity for a hospital length of stay within the 96-hour period would also violate paragraph (a) of this section.

(3) *With respect to attending providers.* A group health plan, and a health insurance issuer offering group health insurance coverage, may not directly or indirectly—

(i) Penalize (for example, take disciplinary action against or retaliate against), or otherwise reduce or limit the compensation of, an attending provider because the provider furnished care to a participant or beneficiary in accordance with this section; or

(ii) Provide monetary or other incentives to an attending provider to induce the provider to furnish care to a participant or beneficiary in a manner inconsistent with this section, including providing any incentive that could induce an attending provider to discharge a mother or newborn earlier than 48 hours (or 96 hours) after delivery.

(c) *Construction.* With respect to this section, the following rules of construction apply:

(1) *Hospital stays not mandatory.* This section does not require a mother to—

(i) Give birth in a hospital; or

(ii) Stay in the hospital for a fixed period of time following the birth of her child.

(2) *Hospital stay benefits not mandated.* This section does not apply to any group health plan, or any group health insurance coverage, that does not provide benefits for hospital lengths of stay in connection with childbirth for a mother or her newborn child.

(3) *Cost-sharing rules*—(i) *In general.* This section does not prevent a group health plan or a health insurance issuer offering group health insurance coverage from imposing deductibles, coinsurance, or other cost-sharing in relation to benefits for hospital lengths of stay in connection with childbirth for a mother or a newborn under the plan or coverage, except that the coinsurance or other cost-sharing for any portion of the hospital length of stay specified in paragraph (a) of this section may not be greater than that for any preceding portion of the stay.

(ii) *Examples.* The rules of this paragraph (c)(3) are illustrated by the following examples. In each example, the group health plan is subject to the requirements of this section, as follows:

Example 1. (i) *Facts.* A group health plan provides benefits for at least a 48-hour hospital length of stay in connection with vaginal deliveries. The plan covers 80 percent of the cost of the stay for the first 24-hour period and 50 percent of the cost of the stay for the second 24-hour period. Thus, the

coinsurance paid by the patient increases from 20 percent to 50 percent after 24 hours.

(ii) *Conclusion.* In this *Example 1,* the plan violates the rules of this paragraph (c)(3) because coinsurance for the second 24-hour period of the 48-hour stay is greater than that for the preceding portion of the stay. (In addition, the plan also violates the similar rule in paragraph (b)(2) of this section.)

Example 2. (i) *Facts.* A group health plan generally covers 70 percent of the cost of a hospital length of stay in connection with childbirth. However, the plan will cover 80 percent of the cost of the stay if the participant or beneficiary notifies the plan of the pregnancy in advance of admission and uses whatever hospital the plan may designate.

(ii) *Conclusion.* In this *Example 2,* the plan does not violate the rules of this paragraph (c)(3) because the level of benefits provided (70 percent or 80 percent) is consistent throughout the 48-hour (or 96-hour) hospital length of stay required under paragraph (a) of this section. (In addition, the plan does not violate the rules in paragraph (a)(4) or (b)(2) of this section.)

(4) *Compensation of attending provider.* This section does not prevent a group health plan or a health insurance issuer offering group health insurance coverage from negotiating with an attending provider the level and type of compensation for care furnished in accordance with this section (including paragraph (b) of this section).

(d) *Notice requirement.* See 29 CFR 2520.102–3(u) (relating to the disclosure requirement under section 711(d) of the Act).

(e) *Applicability in certain states*—(1) *Health insurance coverage.* The requirements of section 711 of the Act and this section do not apply with respect to health insurance coverage offered in connection with a group health plan if there is a state law regulating the coverage that meets any of the following criteria:

(i) The state law requires the coverage to provide for at least a 48-hour hospital length of stay following a vaginal delivery and at least a 96-hour hospital length of stay following a delivery by cesarean section.

(ii) The state law requires the coverage to provide for maternity and pediatric care in accordance with guidelines that relate to care following childbirth established by the American College of Obstetricians and Gynecologists, the American Academy of Pediatrics, or any other established professional medical association.

(iii) The state law requires, in connection with the coverage for maternity care, that the hospital length of stay for such care is left to the decision of (or is required to be made by) the attending provider in consultation with the mother. State laws that require the decision to be made by the attending provider with the consent of the mother satisfy the criterion of this paragraph (e)(1)(iii).

(2) *Group health plans*—(i) *Fully-insured plans.* For a group health plan that provides benefits solely through health insurance coverage, if the state law regulating the health insurance coverage meets any of the criteria in paragraph (e)(1) of this section, then the requirements of section 711 of the Act and this section do not apply.

(ii) *Self-insured plans.* For a group health plan that provides all benefits for hospital lengths of stay in connection with childbirth other than through health insurance coverage, the requirements of section 711 of the Act and this section apply.

(iii) *Partially-insured plans.* For a group health plan that provides some benefits through health insurance coverage, if the state law regulating the health insurance coverage meets any of the criteria in paragraph (e)(1) of this section, then the requirements of section 711 of the Act and this section apply only to the extent the plan provides benefits for hospital lengths of stay in connection with childbirth other than through health insurance coverage.

(3) *Relation to section 731(a) of the Act.* The preemption provisions contained in section 731(a)(1) of the Act and Sec. 2590.731(a) do not supersede a state law described in paragraph (e)(1) of this section.

(4) *Examples.* The rules of this paragraph (e) are illustrated by the following examples:

Example 1. (i) *Facts.* A group health plan buys group health insurance coverage in a state that requires that the coverage provide for at least a 48-hour hospital length of stay following a vaginal delivery and at least a 96-hour hospital length of stay following a delivery by cesarean section.

(ii) *Conclusion.* In this *Example 1,* the coverage is subject to state law, and the requirements of section 711 of the Act and this section do not apply.

Example 2. (i) *Facts.* A self-insured group health plan covers hospital lengths of stay in connection with childbirth in a state that requires health insurance coverage to provide for maternity and pediatric care in accordance with guidelines that relate to care following childbirth established by the American College of Obstetricians and Gynecologists and the American Academy of Pediatrics.

(ii) *Conclusion.* In this *Example 2,* even though the state law satisfies the criterion of paragraph (e)(1)(ii) of this section, because the plan provides benefits for hospital lengths of stay in connection with childbirth other than through health insurance coverage, the plan is subject to the requirements of section 711 of the Act and this section.

(f) *Applicability date.* This section applies to group health plans, and health insurance issuers offering group health insurance coverage, for plan years beginning on or after January 1, 2009.

Signed at Washington, DC this 2nd day of October, 2008.

Bradford P. Campbell,

Assistant Secretary, Employee Benefits Security Administration, U.S. Department of Labor.

Adoption of Amendments to the Regulations

DEPARTMENT OF HEALTH AND HUMAN SERVICES

45 CFR SUBTITLE A, SUBCHAPTER B

■ 45 CFR subtitle A, subchapter B, is amended as set forth below:

PART 146—REQUIREMENTS FOR THE GROUP HEALTH INSURANCE MARKET

■ 1. The authority citation for part 146 continues to read as follows:

Authority: Secs. 2701 through 2763, 2791, and 2792 of the PHS Act (42 U.S.C. 300gg through 300gg–63, 300gg–91, and 300gg–92).

■ 2. Section 146.130 is revised to read as follows:

§ 146.130 Standards relating to benefits for mothers and newborns.

(a) *Hospital length of stay*—(1) *General rule.* Except as provided in paragraph (a)(5) of this section, a group health plan, or a health insurance issuer offering group health insurance coverage, that provides benefits for a hospital length of stay in connection with childbirth for a mother or her newborn may not restrict benefits for the stay to less than—

(i) 48 hours following a vaginal delivery; or

(ii) 96 hours following a delivery by cesarean section.

(2) *When stay begins*—(i) *Delivery in a hospital.* If delivery occurs in a hospital, the hospital length of stay for the mother or newborn child begins at the time of delivery (or in the case of multiple births, at the time of the last delivery).

(ii) *Delivery outside a hospital.* If delivery occurs outside a hospital, the hospital length of stay begins at the time the mother or newborn is admitted as a hospital inpatient in connection with childbirth. The determination of whether an admission is in connection with childbirth is a medical decision to be made by the attending provider.

(3) *Examples.* The rules of paragraphs (a)(1) and (2) of this section are illustrated by the following examples. In

each example, the group health plan provides benefits for hospital lengths of stay in connection with childbirth and is subject to the requirements of this section, as follows:

Example 1. (i) *Facts.* A pregnant woman covered under a group health plan goes into labor and is admitted to the hospital at 10 p.m. on June 11. She gives birth by vaginal delivery at 6 a.m. on June 12.

(ii) *Conclusion.* In this *Example 1,* the 48-hour period described in paragraph (a)(1)(i) of this section ends at 6 a.m. on June 14.

Example 2. (i) *Facts.* A woman covered under a group health plan gives birth at home by vaginal delivery. After the delivery, the woman begins bleeding excessively in connection with the childbirth and is admitted to the hospital for treatment of the excessive bleeding at 7 p.m. on October 1.

(ii) *Conclusion.* In this *Example 2,* the 48-hour period described in paragraph (a)(1)(i) of this section ends at 7 p.m. on October 3.

Example 3. (i) *Facts.* A woman covered under a group health plan gives birth by vaginal delivery at home. The child later develops pneumonia and is admitted to the hospital. The attending provider determines that the admission is not in connection with childbirth.

(ii) *Conclusion.* In this *Example 3,* the hospital length-of-stay requirements of this section do not apply to the child's admission to the hospital because the admission is not in connection with childbirth.

(4) *Authorization not required*—(i) *In general.* A plan or issuer is prohibited from requiring that a physician or other health care provider obtain authorization from the plan or issuer for prescribing the hospital length of stay specified in paragraph (a)(1) of this section. (See also paragraphs (b)(2) and (c)(3) of this section for rules and examples regarding other authorization and certain notice requirements.)

(ii) *Example.* The rule of this paragraph (a)(4) is illustrated by the following example:

Example. (i) *Facts.* In the case of a delivery by cesarean section, a group health plan subject to the requirements of this section automatically provides benefits for any hospital length of stay of up to 72 hours. For any longer stay, the plan requires an attending provider to complete a certificate of medical necessity. The plan then makes a determination, based on the certificate of medical necessity, whether a longer stay is medically necessary.

(ii) *Conclusion.* In this *Example,* the requirement that an attending provider complete a certificate of medical necessity to obtain authorization for the period between 72 hours and 96 hours following a delivery by cesarean section is prohibited by this paragraph (a)(4).

(5) *Exceptions*—(i) *Discharge of mother.* If a decision to discharge a mother earlier than the period specified in paragraph (a)(1) of this section is made by an attending provider, in consultation with the mother, the requirements of paragraph (a)(1) of this section do not apply for any period after the discharge.

(ii) *Discharge of newborn.* If a decision to discharge a newborn child earlier than the period specified in paragraph (a)(1) of this section is made by an attending provider, in consultation with the mother (or the newborn's authorized representative), the requirements of paragraph (a)(1) of this section do not apply for any period after the discharge.

(iii) *Attending provider defined.* For purposes of this section, attending provider means an individual who is licensed under applicable state law to provide maternity or pediatric care and who is directly responsible for providing maternity or pediatric care to a mother or newborn child. Therefore, a plan, hospital, managed care organization, or other issuer is not an attending provider.

(iv) *Example.* The rules of this paragraph (a)(5) are illustrated by the following example:

Example. (i) *Facts.* A pregnant woman covered under a group health plan subject to the requirements of this section goes into labor and is admitted to a hospital. She gives birth by cesarean section. On the third day after the delivery, the attending provider for the mother consults with the mother, and the attending provider for the newborn consults with the mother regarding the newborn. The attending providers authorize the early discharge of both the mother and the newborn. Both are discharged approximately 72 hours after the delivery. The plan pays for the 72-hour hospital stays.

(ii) *Conclusion.* In this *Example,* the requirements of this paragraph (a) have been satisfied with respect to the mother and the newborn. If either is readmitted, the hospital stay for the readmission is not subject to this section.

(b) *Prohibitions*—(1) *With respect to mothers*—(i) *In general.* A group health plan, and a health insurance issuer offering group health insurance coverage, may not—

(A) Deny a mother or her newborn child eligibility or continued eligibility to enroll or renew coverage under the terms of the plan solely to avoid the requirements of this section; or

(B) Provide payments (including payments-in-kind) or rebates to a mother to encourage her to accept less than the minimum protections available under this section.

(ii) *Examples.* The rules of this paragraph (b)(1) are illustrated by the following examples. In each example, the group health plan is subject to the requirements of this section, as follows:

Example 1. (i) *Facts.* A group health plan provides benefits for at least a 48-hour hospital length of stay following a vaginal delivery. If a mother and newborn covered under the plan are discharged within 24 hours after the delivery, the plan will waive the copayment and deductible.

(ii) *Conclusion.* In this *Example 1,* because waiver of the copayment and deductible is in the nature of a rebate that the mother would not receive if she and her newborn remained in the hospital, it is prohibited by this paragraph (b)(1). (In addition, the plan violates paragraph (b)(2) of this section because, in effect, no copayment or deductible is required for the first portion of the stay and a double copayment and a deductible are required for the second portion of the stay.)

Example 2. (i) *Facts.* A group health plan provides benefits for at least a 48-hour hospital length of stay following a vaginal delivery. In the event that a mother and her newborn are discharged earlier than 48 hours and the discharges occur after consultation with the mother in accordance with the requirements of paragraph (a)(5) of this section, the plan provides for a follow-up visit by a nurse within 48 hours after the discharges to provide certain services that the mother and her newborn would otherwise receive in the hospital.

(ii) *Conclusion.* In this *Example 2,* because the follow-up visit does not provide any services beyond what the mother and her newborn would receive in the hospital, coverage for the follow-up visit is not prohibited by this paragraph (b)(1).

(2) *With respect to benefit restrictions*—(i) *In general.* Subject to paragraph (c)(3) of this section, a group health plan, and a health insurance issuer offering group health insurance coverage, may not restrict the benefits for any portion of a hospital length of stay specified in paragraph (a) of this section in a manner that is less favorable than the benefits provided for any preceding portion of the stay.

(ii) *Example.* The rules of this paragraph (b)(2) are illustrated by the following example:

Example. (i) *Facts.* A group health plan subject to the requirements of this section provides benefits for hospital lengths of stay in connection with childbirth. In the case of a delivery by cesarean section, the plan automatically pays for the first 48 hours. With respect to each succeeding 24-hour period, the participant or beneficiary must call the plan to obtain precertification from a utilization reviewer, who determines if an additional 24-hour period is medically necessary. If this approval is not obtained, the plan will not provide benefits for any succeeding 24-hour period.

(ii) *Conclusion.* In this *Example,* the requirement to obtain precertification for the two 24-hour periods immediately following the initial 48-hour stay is prohibited by this paragraph (b)(2) because benefits for the latter part of the stay are restricted in a manner that is less favorable than benefits for a preceding portion of the stay. (However, this section does not prohibit a plan from requiring precertification for any period after

the first 96 hours.) In addition, the requirement to obtain precertification from the plan based on medical necessity for a hospital length of stay within the 96-hour period would also violate paragraph (a) of this section.

(3) *With respect to attending providers.* A group health plan, and a health insurance issuer offering group health insurance coverage, may not directly or indirectly—

(i) Penalize (for example, take disciplinary action against or retaliate against), or otherwise reduce or limit the compensation of, an attending provider because the provider furnished care to a participant or beneficiary in accordance with this section; or

(ii) Provide monetary or other incentives to an attending provider to induce the provider to furnish care to a participant or beneficiary in a manner inconsistent with this section, including providing any incentive that could induce an attending provider to discharge a mother or newborn earlier than 48 hours (or 96 hours) after delivery.

(c) *Construction.* With respect to this section, the following rules of construction apply:

(1) *Hospital stays not mandatory.* This section does not require a mother to—

(i) Give birth in a hospital; or

(ii) Stay in the hospital for a fixed period of time following the birth of her child.

(2) *Hospital stay benefits not mandated.* This section does not apply to any group health plan, or any group health insurance coverage, that does not provide benefits for hospital lengths of stay in connection with childbirth for a mother or her newborn child.

(3) *Cost-sharing rules*—(i) *In general.* This section does not prevent a group health plan or a health insurance issuer offering group health insurance coverage from imposing deductibles, coinsurance, or other cost-sharing in relation to benefits for hospital lengths of stay in connection with childbirth for a mother or a newborn under the plan or coverage, except that the coinsurance or other cost-sharing for any portion of the hospital length of stay specified in paragraph (a) of this section may not be greater than that for any preceding portion of the stay.

(ii) *Examples.* The rules of this paragraph (c)(3) are illustrated by the following examples. In each example, the group health plan is subject to the requirements of this section, as follows:

Example 1. (i) *Facts.* A group health plan provides benefits for at least a 48-hour hospital length of stay in connection with vaginal deliveries. The plan covers 80 percent of the cost of the stay for the first 24-hour period and 50 percent of the cost of the stay for the second 24-hour period. Thus, the coinsurance paid by the patient increases from 20 percent to 50 percent after 24 hours.

(ii) *Conclusion.* In this *Example 1*, the plan violates the rules of this paragraph (c)(3) because coinsurance for the second 24-hour period of the 48-hour stay is greater than that for the preceding portion of the stay. (In addition, the plan also violates the similar rule in paragraph (b)(2) of this section.)

Example 2. (i) *Facts.* A group health plan generally covers 70 percent of the cost of a hospital length of stay in connection with childbirth. However, the plan will cover 80 percent of the cost of the stay if the participant or beneficiary notifies the plan of the pregnancy in advance of admission and uses whatever hospital the plan may designate.

(ii) *Conclusion.* In this *Example 2*, the plan does not violate the rules of this paragraph (c)(3) because the level of benefits provided (70 percent or 80 percent) is consistent throughout the 48-hour (or 96-hour) hospital length of stay required under paragraph (a) of this section. (In addition, the plan does not violate the rules in paragraph (a)(4) or (b)(2) of this section.)

(4) *Compensation of attending provider.* This section does not prevent a group health plan or a health insurance issuer offering group health insurance coverage from negotiating with an attending provider the level and type of compensation for care furnished in accordance with this section (including paragraph (b) of this section).

(d) *Notice requirement.* Except as provided in paragraph (d)(4) of this section, a group health plan that provides benefits for hospital lengths of stay in connection with childbirth must meet the following requirements:

(1) *Required statement.* The plan document that provides a description of plan benefits to participants and beneficiaries, or that notifies participants and beneficiaries of plan benefit changes, must disclose information that notifies participants and beneficiaries of their rights under this section.

(2) *Disclosure notice.* To meet the disclosure requirement set forth in paragraph (d)(1) of this section, the following disclosure notice must be used:

Statement of Rights Under the Newborns' and Mothers' Health Protection Act

Under federal law, group health plans and health insurance issuers offering group health insurance coverage generally may not restrict benefits for any hospital length of stay in connection with childbirth for the mother or newborn child to less than 48 hours following a vaginal delivery, or less than 96 hours following a delivery by cesarean section. However, the plan or issuer may pay for a shorter stay if the attending provider (*e.g.*, your physician, nurse midwife, or physician assistant), after consultation with the mother, discharges the mother or newborn earlier.

Also, under federal law, plans and issuers may not set the level of benefits or out-of-pocket costs so that any later portion of the 48-hour (or 96-hour) stay is treated in a manner less favorable to the mother or newborn than any earlier portion of the stay.

In addition, a plan or issuer may not, under federal law, require that a physician or other health care provider obtain authorization for prescribing a length of stay of up to 48 hours (or 96 hours). However, to use certain providers or facilities, or to reduce your out-of-pocket costs, you may be required to obtain precertification. For information on precertification, contact your plan administrator.

(3) *Timing of disclosure.* The disclosure notice in paragraph (d)(2) of this section shall be furnished to each participant covered under a group health plan, and each beneficiary receiving benefits under a group health plan, not later than 60 days after the first day of the first plan year beginning on or after January 1, 2009. Each time a plan distributes one or both of the documents described in paragraph (d)(1) to participants and beneficiaries after providing this initial notice, the disclosure notice in paragraph (d)(2) must appear in at least one of those documents.

(4) *Exceptions.* The requirements of this paragraph (d) do not apply in the following situations.

(i) *Self-insured plans that have already provided notice.* If benefits for hospital lengths of stay in connection with childbirth are not provided through health insurance coverage, and the group health plan has already provided an initial notice that complies with paragraphs (d)(1) and (d)(2) of this section, the group health plan is not automatically required to provide another such notice to participants and beneficiaries who have been provided with the initial notice. However, following the effective date of these regulations, whenever such a plan provides one or both of the documents described in paragraph (d)(1) of this section to participants and beneficiaries, the disclosure notice in paragraph (d)(2) of this section must appear in at least one of those documents.

(ii) *Self-insured plans that have elected exemption from this section.* If benefits for hospital lengths of stay in connection with childbirth are not provided through health insurance coverage, and the group health plan has made the election described in § 146.180 to be exempted from the requirements of this section, the group health plan is not subject to this paragraph (d).

(iii) *Insured plans.* If benefits for hospital lengths of stay in connection with childbirth are provided through health insurance coverage, and the coverage is regulated under a State law described in paragraph (e) of this section, the group health plan is not subject to this paragraph (d).

(e) *Applicability in certain states*—(1) *Health insurance coverage.* The requirements of section 2704 of the PHS Act and this section do not apply with respect to health insurance coverage offered in connection with a group health plan if there is a state law regulating the coverage that meets any of the following criteria:

(i) The state law requires the coverage to provide for at least a 48-hour hospital length of stay following a vaginal delivery and at least a 96-hour hospital length of stay following a delivery by cesarean section.

(ii) The state law requires the coverage to provide for maternity and pediatric care in accordance with guidelines that relate to care following childbirth established by the American College of Obstetricians and Gynecologists, the American Academy of Pediatrics, or any other established professional medical association.

(iii) The state law requires, in connection with the coverage for maternity care, that the hospital length of stay for such care is left to the decision of (or is required to be made by) the attending provider in consultation with the mother. State laws that require the decision to be made by the attending provider with the consent of the mother satisfy the criterion of this paragraph (e)(1)(iii).

(2) *Group health plans*—(i) *Fully-insured plans.* For a group health plan that provides benefits solely through health insurance coverage, if the state law regulating the health insurance coverage meets any of the criteria in paragraph (e)(1) of this section, then the requirements of section 2704 of the PHS Act and this section do not apply.

(ii) *Self-insured plans.* For a group health plan that provides all benefits for hospital lengths of stay in connection with childbirth other than through health insurance coverage, the requirements of section 2704 of the PHS Act and this section apply.

(iii) *Partially-insured plans.* For a group health plan that provides some benefits through health insurance coverage, if the state law regulating the health insurance coverage meets any of the criteria in paragraph (e)(1) of this section, then the requirements of section 2704 of the PHS Act and this section apply only to the extent the plan provides benefits for hospital lengths of stay in connection with childbirth other than through health insurance coverage.

(3) *Relation to section 2723(a) of the PHS Act.* The preemption provisions contained in section 2723(a)(1) of the PHS Act and § 146.143(a) do not supersede a state law described in paragraph (e)(1) of this section.

(4) *Examples.* The rules of this paragraph (e) are illustrated by the following examples:

Example 1. (i) *Facts.* A group health plan buys group health insurance coverage in a state that requires that the coverage provide for at least a 48-hour hospital length of stay following a vaginal delivery and at least a 96-hour hospital length of stay following a delivery by cesarean section.

(ii) *Conclusion.* In this *Example 1*, the coverage is subject to state law, and the requirements of section 2704 of the PHS Act and this section do not apply.

Example 2. (i) *Facts.* A self-insured group health plan covers hospital lengths of stay in connection with childbirth in a state that requires health insurance coverage to provide for maternity and pediatric care in accordance with guidelines that relate to care following childbirth established by the American College of Obstetricians and Gynecologists and the American Academy of Pediatrics.

(ii) *Conclusion.* In this *Example 2*, even though the state law satisfies the criterion of paragraph (e)(1)(ii) of this section, because the plan provides benefits for hospital lengths of stay in connection with childbirth other than through health insurance coverage, the plan is subject to the requirements of section 2704 of the PHS Act and this section.

(f) *Applicability date.* Section 2704 of the PHS Act applies to group health plans, and health insurance issuers offering group health insurance coverage, for plan years beginning on or after January 1, 1998. This section applies to group health plans, and health insurance issuers offering group health insurance coverage, for plan years beginning on or after January 1, 2009.

PART 148—REQUIREMENTS FOR THE INDIVIDUAL HEALTH INSURANCE MARKET

■ 3. The authority citation for part 148 continues to read as follows:

Authority: Secs. 2741 through 2763, 2791, and 2792 of the Public Health Service Act (42 U.S.C. 300gg–41 through 300gg–63, 300gg–91, and 300gg–92).

■ 4. Section 148.170 is revised to read as follows:

§ 148.170 Standards relating to benefits for mothers and newborns.

(a) *Hospital length of stay*—(1) *General rule.* Except as provided in paragraph (a)(5) of this section, an issuer offering health insurance coverage in the individual market that provides benefits for a hospital length of stay in connection with childbirth for a mother or her newborn may not restrict benefits for the stay to less than—

(i) 48 hours following a vaginal delivery; or

(ii) 96 hours following a delivery by cesarean section.

(2) *When stay begins*—(i) *Delivery in a hospital.* If delivery occurs in a hospital, the hospital length of stay for the mother or newborn child begins at the time of delivery (or in the case of multiple births, at the time of the last delivery).

(ii) *Delivery outside a hospital.* If delivery occurs outside a hospital, the hospital length of stay begins at the time the mother or newborn is admitted as a hospital inpatient in connection with childbirth. The determination of whether an admission is in connection with childbirth is a medical decision to be made by the attending provider.

(3) *Examples.* The rules of paragraphs (a)(1) and (2) of this section are illustrated by the following examples. In each example, the issuer provides benefits for hospital lengths of stay in connection with childbirth and is subject to the requirements of this section, as follows:

Example 1. (i) *Facts.* A pregnant woman covered under a policy issued in the individual market goes into labor and is admitted to the hospital at 10 p.m. on June 11. She gives birth by vaginal delivery at 6 a.m. on June 12.

(ii) *Conclusion.* In this *Example 1*, the 48-hour period described in paragraph (a)(1)(i) of this section ends at 6 a.m. on June 14.

Example 2. (i) *Facts.* A woman covered under a policy issued in the individual market gives birth at home by vaginal delivery. After the delivery, the woman begins bleeding excessively in connection with the childbirth and is admitted to the hospital for treatment of the excessive bleeding at 7 p.m. on October 1.

(ii) *Conclusion.* In this *Example 2*, the 48-hour period described in paragraph (a)(1)(i) of this section ends at 7 p.m. on October 3.

Example 3. (i) *Facts.* A woman covered under a policy issued in the individual market gives birth by vaginal delivery at home. The child later develops pneumonia and is admitted to the hospital. The attending provider determines that the admission is not in connection with childbirth.

(ii) *Conclusion.* In this *Example 3*, the hospital length-of-stay requirements of this section do not apply to the child's admission to the hospital because the admission is not in connection with childbirth.

(4) *Authorization not required*—(i) *In general.* An issuer is prohibited from requiring that a physician or other health care provider obtain authorization from the issuer for

prescribing the hospital length of stay specified in paragraph (a)(1) of this section. (See also paragraphs (b)(2) and (c)(3) of this section for rules and examples regarding other authorization and certain notice requirements.)

(ii) *Example.* The rule of this paragraph (a)(4) is illustrated by the following example:

Example. (i) *Facts.* In the case of a delivery by cesarean section, an issuer subject to the requirements of this section automatically provides benefits for any hospital length of stay of up to 72 hours. For any longer stay, the issuer requires an attending provider to complete a certificate of medical necessity. The issuer then makes a determination, based on the certificate of medical necessity, whether a longer stay is medically necessary.

(ii) *Conclusion.* In this *Example*, the requirement that an attending provider complete a certificate of medical necessity to obtain authorization for the period between 72 hours and 96 hours following a delivery by cesarean section is prohibited by this paragraph (a)(4).

(5) *Exceptions*—(i) *Discharge of mother.* If a decision to discharge a mother earlier than the period specified in paragraph (a)(1) of this section is made by an attending provider, in consultation with the mother, the requirements of paragraph (a)(1) of this section do not apply for any period after the discharge.

(ii) *Discharge of newborn.* If a decision to discharge a newborn child earlier than the period specified in paragraph (a)(1) of this section is made by an attending provider, in consultation with the mother (or the newborn's authorized representative), the requirements of paragraph (a)(1) of this section do not apply for any period after the discharge.

(iii) *Attending provider defined.* For purposes of this section, attending provider means an individual who is licensed under applicable state law to provide maternity or pediatric care and who is directly responsible for providing maternity or pediatric care to a mother or newborn child. Therefore, an issuer, plan, hospital, or managed care organization is not an attending provider.

(iv) *Example.* The rules of this paragraph (a)(5) are illustrated by the following example:

Example. (i) *Facts.* A pregnant woman covered under a policy offered by an issuer subject to the requirements of this section goes into labor and is admitted to a hospital. She gives birth by cesarean section. On the third day after the delivery, the attending provider for the mother consults with the mother, and the attending provider for the newborn consults with the mother regarding the newborn. The attending providers authorize the early discharge of both the mother and the newborn. Both are discharged approximately 72 hours after the delivery. The issuer pays for the 72-hour hospital stays.

(ii) *Conclusion.* In this *Example*, the requirements of this paragraph (a) have been satisfied with respect to the mother and the newborn. If either is readmitted, the hospital stay for the readmission is not subject to this section.

(b) *Prohibitions*—(1) *With respect to mothers*—(i) *In general.* An issuer subject to the requirements of this section may not—

(A) Deny a mother or her newborn child eligibility or continued eligibility to enroll in or renew coverage solely to avoid the requirements of this section; or

(B) Provide payments (including payments-in-kind) or rebates to a mother to encourage her to accept less than the minimum protections available under this section.

(ii) *Examples.* The rules of this paragraph (b)(1) are illustrated by the following examples. In each example, the issuer is subject to the requirements of this section, as follows:

Example 1. (i) *Facts.* An issuer provides benefits for at least a 48-hour hospital length of stay following a vaginal delivery. If a mother and newborn covered under a policy issued in the individual market are discharged within 24 hours after the delivery, the issuer will waive the copayment and deductible.

(ii) *Conclusion.* In this *Example 1,* because waiver of the copayment and deductible is in the nature of a rebate that the mother would not receive if she and her newborn remained in the hospital, it is prohibited by this paragraph (b)(1). (In addition, the issuer violates paragraph (b)(2) of this section because, in effect, no copayment or deductible is required for the first portion of the stay and a double copayment and a deductible are required for the second portion of the stay.)

Example 2. (i) *Facts.* An issuer provides benefits for at least a 48-hour hospital length of stay following a vaginal delivery. In the event that a mother and her newborn are discharged earlier than 48 hours and the discharges occur after consultation with the mother in accordance with the requirements of paragraph (a)(5) of this section, the issuer provides for a follow-up visit by a nurse within 48 hours after the discharges to provide certain services that the mother and her newborn would otherwise receive in the hospital.

(ii) *Conclusion.* In this *Example 2,* because the follow-up visit does not provide any services beyond what the mother and her newborn would receive in the hospital, coverage for the follow-up visit is not prohibited by this paragraph (b)(1).

(2) *With respect to benefit restrictions*—(i) *In general.* Subject to paragraph (c)(3) of this section, an issuer may not restrict the benefits for any portion of a hospital length of stay specified in paragraph (a) of this section in a manner that is less favorable than the benefits provided for any preceding portion of the stay.

(ii) *Example.* The rules of this paragraph (b)(2) are illustrated by the following example:

Example. (i) *Facts.* An issuer subject to the requirements of this section provides benefits for hospital lengths of stay in connection with childbirth. In the case of a delivery by cesarean section, the issuer automatically pays for the first 48 hours. With respect to each succeeding 24-hour period, the covered individual must call the issuer to obtain precertification from a utilization reviewer, who determines if an additional 24-hour period is medically necessary. If this approval is not obtained, the issuer will not provide benefits for any succeeding 24-hour period.

(ii) *Conclusion.* In this *Example,* the requirement to obtain precertification for the two 24-hour periods immediately following the initial 48-hour stay is prohibited by this paragraph (b)(2) because benefits for the latter part of the stay are restricted in a manner that is less favorable than benefits for a preceding portion of the stay. (However, this section does not prohibit an issuer from requiring precertification for any period after the first 96 hours.) In addition, the requirement to obtain precertification from the issuer based on medical necessity for a hospital length of stay within the 96-hour period would also violate paragraph (a) of this section.

(3) *With respect to attending providers.* An issuer may not directly or indirectly—

(i) Penalize (for example, take disciplinary action against or retaliate against), or otherwise reduce or limit the compensation of, an attending provider because the provider furnished care to a covered individual in accordance with this section; or

(ii) Provide monetary or other incentives to an attending provider to induce the provider to furnish care to a covered individual in a manner inconsistent with this section, including providing any incentive that could induce an attending provider to discharge a mother or newborn earlier than 48 hours (or 96 hours) after delivery.

(c) *Construction.* With respect to this section, the following rules of construction apply:

(1) *Hospital stays not mandatory.* This section does not require a mother to—

(i) Give birth in a hospital; or

(ii) Stay in the hospital for a fixed period of time following the birth of her child.

(2) *Hospital stay benefits not mandated.* This section does not apply to any issuer that does not provide benefits for hospital lengths of stay in

connection with childbirth for a mother or her newborn child.

(3) *Cost-sharing rules*—(i) *In general.* This section does not prevent an issuer from imposing deductibles, coinsurance, or other cost-sharing in relation to benefits for hospital lengths of stay in connection with childbirth for a mother or a newborn under the coverage, except that the coinsurance or other cost-sharing for any portion of the hospital length of stay specified in paragraph (a) of this section may not be greater than that for any preceding portion of the stay.

(ii) *Examples.* The rules of this paragraph (c)(3) are illustrated by the following examples. In each example, the issuer is subject to the requirements of this section, as follows:

Example 1. (i) *Facts.* An issuer provides benefits for at least a 48-hour hospital length of stay in connection with vaginal deliveries. The issuer covers 80 percent of the cost of the stay for the first 24-hour period and 50 percent of the cost of the stay for the second 24-hour period. Thus, the coinsurance paid by the patient increases from 20 percent to 50 percent after 24 hours.

(ii) *Conclusion.* In this *Example 1*, the issuer violates the rules of this paragraph (c)(3) because coinsurance for the second 24-hour period of the 48-hour stay is greater than that for the preceding portion of the stay. (In addition, the issuer also violates the similar rule in paragraph (b)(2) of this section.)

Example 2. (i) *Facts.* An issuer generally covers 70 percent of the cost of a hospital length of stay in connection with childbirth. However, the issuer will cover 80 percent of the cost of the stay if the covered individual notifies the issuer of the pregnancy in advance of admission and uses whatever hospital the issuer may designate.

(ii) *Conclusion.* In this *Example 2,* the issuer does not violate the rules of this paragraph (c)(3) because the level of benefits provided (70 percent or 80 percent) is consistent throughout the 48-hour (or 96-hour) hospital length of stay required under paragraph (a) of this section. (In addition, the issuer does not violate the rules in paragraph (a)(4) or (b)(2) of this section.)

(4) *Compensation of attending provider.* This section does not prevent an issuer from negotiating with an attending provider the level and type of compensation for care furnished in accordance with this section (including paragraph (b) of this section).

(5) *Applicability.* This section applies to all health insurance coverage issued in the individual market, and is not limited in its application to coverage that is provided to eligible individuals as defined in section 2741(b) of the PHS Act.

(d) *Notice requirement.* Except as provided in paragraph (d)(4) of this section, an issuer offering health insurance in the individual market must meet the following requirements with respect to benefits for hospital lengths of stay in connection with childbirth:

(1) Required statement. The insurance contract must disclose information that notifies covered individuals of their rights under this section.

(2) Disclosure notice. To meet the disclosure requirements set forth in paragraph (d)(1) of this section, the following disclosure notice must be used:

Statement of Rights Under the Newborns' and Mothers' Health Protection Act

Under federal law, health insurance issuers generally may not restrict benefits for any hospital length of stay in connection with childbirth for the mother or newborn child to less than 48 hours following a vaginal delivery, or less than 96 hours following a delivery by cesarean section. However, the issuer may pay for a shorter stay if the attending provider (*e.g.* , your physician, nurse midwife, or physician assistant), after consultation with the mother, discharges the mother or newborn earlier.

Also, under federal law, issuers may not set the level of benefits or out-of-pocket costs so that any later portion of the 48-hour (or 96-hour) stay is treated in a manner less favorable to the mother or newborn than any earlier portion of the stay.

In addition, an issuer may not, under federal law, require that a physician or other health care provider obtain authorization for prescribing a length of stay of up to 48 hours (or 96 hours). However, to use certain providers or facilities, or to reduce your out-of-pocket costs, you may be required to obtain precertification. For information on precertification, contact your issuer.

(3) *Timing of disclosure.* The disclosure notice in paragraph (d)(2) of this section shall be furnished to the covered individuals in the form of a copy of the contract, or a rider (or equivalent amendment to the contract) no later than December 19, 2008.

To the extent an issuer has already provided the disclosure notice in paragraph (d)(2) of this section to covered individuals, it need not provide another such notice by December 19, 2008.

(4) *Exception.* The requirements of this paragraph (d) do not apply with respect to coverage regulated under a state law described in paragraph (e) of this section.

(e) *Applicability in certain states*—(1) *Health insurance coverage.* The requirements of section 2751 of the PHS Act and this section do not apply with respect to health insurance coverage in the individual market if there is a state law regulating the coverage that meets any of the following criteria:

(i) The state law requires the coverage to provide for at least a 48-hour hospital length of stay following a vaginal delivery and at least a 96-hour hospital length of stay following a delivery by cesarean section.

(ii) The state law requires the coverage to provide for maternity and pediatric care in accordance with guidelines that relate to care following childbirth established by the American College of Obstetricians and Gynecologists, the American Academy of Pediatrics, or any other established professional medical association.

(iii) The state law requires, in connection with the coverage for maternity care, that the hospital length of stay for such care is left to the decision of (or is required to be made by) the attending provider in consultation with the mother. State laws that require the decision to be made by the attending provider with the consent of the mother satisfy the criterion of this paragraph (e)(1)(iii).

(2) *Relation to section 2762(a) of the PHS Act.* The preemption provisions contained in section 2762(a) of the PHS Act and § 148.210(b) do not supersede a state law described in paragraph (e)(1) of this section.

(f) *Applicability date.* Section 2751 of the PHS Act applies to health insurance coverage offered, sold, issued, renewed, in effect, or operated in the individual market on or after January 1, 1998. This section applies to health insurance coverage offered, sold, issued, renewed, in effect, or operated in the individual market on or after January 1, 2009.

Dated: May 11, 2007.

Leslie V. Norwalk,

Acting Administrator, Centers for Medicare & Medicaid Services.

Dated: October 30, 2007.

Michael O. Leavitt,

Secretary, Department of Health and Human Services.

Editorial Note: This document was received in the Office of the Federal Register on October 14, 2008.

[FR Doc. E8–24666 Filed 10–17–08; 8:45 am]

BILLING CODE 4830–01–4510–29–4120–01–P

Federal Register

Monday,
October 20, 2008

Part IV

The President

Notice of October 16, 2008—Continuation of the National Emergency With Respect To Significant Narcotics Traffickers Centered in Colombia

Federal Register
Vol. 73, No. 203
Monday, October 20, 2008

Presidential Documents

Title 3—

The President

Notice of October 16, 2008

Continuation of the National Emergency With Respect To Significant Narcotics Traffickers Centered in Colombia

On October 21, 1995, by Executive Order 12978, the President declared a national emergency pursuant to the International Emergency Economic Powers Act (50 U.S.C. 1701–1706) to deal with the unusual and extraordinary threat to the national security, foreign policy, and economy of the United States constituted by the actions of significant narcotics traffickers centered in Colombia, and the extreme level of violence, corruption, and harm such actions cause in the United States and abroad.

Because the actions of significant narcotics traffickers centered in Colombia continue to threaten the national security, foreign policy, and economy of the United States and to cause an extreme level of violence, corruption, and harm in the United States and abroad, the national emergency declared on October 21, 1995, and the measures adopted pursuant thereto to deal with that emergency, must continue in effect beyond October 21, 2008. Therefore, in accordance with section 202(d) of the National Emergencies Act (50 U.S.C. 1622(d)), I am continuing for 1 year the national emergency with respect to significant narcotics traffickers centered in Colombia. This notice shall be published in the *Federal Register* and transmitted to the Congress.

THE WHITE HOUSE,
October 16, 2008

[FR Doc. E8–25108
Filed 10–17–08; 11:15 am]
Billing code 3195–W9–P

Reader Aids

Federal Register

Vol. 73, No. 203

Monday, October 20, 2008

CUSTOMER SERVICE AND INFORMATION

Federal Register/Code of Federal Regulations	
General Information, indexes and other finding aids	**202–741–6000**
Laws	**741–6000**
Presidential Documents	
Executive orders and proclamations	**741–6000**
The United States Government Manual	**741–6000**
Other Services	
Electronic and on-line services (voice)	**741–6020**
Privacy Act Compilation	**741–6064**
Public Laws Update Service (numbers, dates, etc.)	**741–6043**
TTY for the deaf-and-hard-of-hearing	**741–6086**

ELECTRONIC RESEARCH

World Wide Web

Full text of the daily Federal Register, CFR and other publications is located at: **http://www.gpoaccess.gov/nara/index.html**

Federal Register information and research tools, including Public Inspection List, indexes, and links to GPO Access are located at: **http://www.archives.gov/federal__register**

E-mail

FEDREGTOC-L (Federal Register Table of Contents LISTSERV) is an open e-mail service that provides subscribers with a digital form of the Federal Register Table of Contents. The digital form of the Federal Register Table of Contents includes HTML and PDF links to the full text of each document.

To join or leave, go to **http://listserv.access.gpo.gov** and select *Online mailing list archives, FEDREGTOC-L, Join or leave the list (or change settings);* then follow the instructions.

PENS (Public Law Electronic Notification Service) is an e-mail service that notifies subscribers of recently enacted laws.

To subscribe, go to **http://listserv.gsa.gov/archives/publaws-l.html** and select *Join or leave the list (or change settings);* then follow the instructions.

FEDREGTOC-L and **PENS** are mailing lists only. We cannot respond to specific inquiries.

Reference questions. Send questions and comments about the Federal Register system to: **fedreg.info@nara.gov**

The Federal Register staff cannot interpret specific documents or regulations.

FEDERAL REGISTER PAGES AND DATE, OCTOBER

56935–57234 1
57235–57474 2
57475–58018 3
58019–58434 6
58435–58866 7
58867–59478 8
59479–60094 9
60095–60602 10
60603–60934 14
60935–61324 15
61325–61648 16
61649–62186 17
62187–62434 20

CFR PARTS AFFECTED DURING OCTOBER

At the end of each month, the Office of the Federal Register publishes separately a List of CFR Sections Affected (LSA), which lists parts and sections affected by documents published since the revision date of each title.

3 CFR

Proclamations:
8294 57223
8295 57233
8296 ..... 57475, 60609
8297 58429
8298 58431
8299 58433
8300 58861
8301 58863
8302 58867
8303 60603
8304 61649
8305 61651
8306 61653
8307 61655

Executive Orders:
12962 (amended by 13474) 57229
13176 (Superseded by 13476) 60605
13474 57229
EO 12139 (amended by EO 13475) 60095
EO 12949 (amended by EO 13475) 60095
EO 13475 60095
13476 60605

Administrative Orders:
Memorandums:
Memorandum of October 3, 2008 (supersedes Memorandum of December 20, 2005) 58869
Notices:
Notice of October 16, 2008 62433
Presidential Determinations:
PD 2008-29 of September 30, 2008 58865
2009-1 60935
2009-2 60937

4 CFR

22 60609

5 CFR

295 58019
315 60611
316 60611
9701 58435
9901 58435

Proposed Rules:
532 58506

6 CFR

Proposed Rules:
5 62214

7 CFR

205 59479
331 61325
984 57485
1260 60097

Proposed Rules:
340 60008
946 62215
966 62218
1703 61198
1780 61198
3570 61198
4280 61198
4284 61198
5002 61198

8 CFR

100 58023
212 58023
214 61332
248 61332

9 CFR

77 60099
121 61325
149 60464
160 60464
161 60464

10 CFR

50 ..... 57235, 60612
431 58772

Proposed Rules:
35 58063
50 62220
51 ..... 59540, 59547, 59551
430 ..... 62034, 62134
431 62034

11 CFR

Proposed Rules:
100 62224
101 62224
102 62224
104 62224
110 62224
113 62224
116 62224
400 62224
9001 62224
9003 62224
9031 62224
9033 62224
9035 62224

12 CFR

201 61657
204 ..... 57488, 59482
263 58031
330 61658
740 56935
745 60616

792 56936
951 61660
1291 61660
Proposed Rules:
327 61560
701 57013
742 57013
1202 60192
1250 60198
1773 60198

13 CFR

101 61665
121 ....56940, 61336
124 57490
125 ....56940, 61336
127 ....56940, 61336
134 ....56940, 61336
Proposed Rules:
121 ....57014, 61369
125 ....57014, 61369
127 ....57014, 61369
134 ....57014, 61369

14 CFR

33 57235
39 ....56956, 56958, 56960, 58032, 58436, 59486, 59488, 59491, 59493, 60102, 61336, 61342, 61343, 61346
71 ....58871, 60622, 60939, 60940
93 ....60544, 60574
97 ....59494, 60623, 60942, 61348
Proposed Rules:
39 ....58507, 58509, 58901, 58903, 58906, 59571, 59573, 60201, 60203, 60206, 60657, 61369, 61372, 61375, 61378, 61747
71 ....58512, 58513, 61749, 61750, 61752
91 57270
93 60996

15 CFR

730 56964
732 ....56964, 57495
734 ....56964, 57495
736 56964
738 57495
740 ....57495, 60910
742 ....57495, 58033
744 ....57495, 58033
746 57495
748 57495
750 57495
762 ....56964, 57495
770 57495
772 ....57495, 60910
774 ....56964, 57495, 58033, 60910
Proposed Rules:
740 57554
772 57554

16 CFR

1610 62187
Proposed Rules:
3 58832
4 58832
1500 58063

17 CFR

30 60625
143 57512
190 57235
229 57237
230 ....58300, 60050
231 60050
232 60050
239 ....58300, 60050
240 ....58300, 60050, 61666, 61678
241 ....60050, 61690
242 ....61690, 61690, 61706
249 ....58300, 60050, 61678
Proposed Rules:
230 61753
240 61753

18 CFR

35 57515
41 58720
131 57515
141 58720
154 57515
157 57515
250 57515
281 57515
284 57515
300 57515
301 60105
341 57515
344 57515
346 57515
347 57515
348 57515
375 57515
385 57515
Proposed Rules:
40 62229
806 57271

19 CFR

4 60943

20 CFR

501 62190

21 CFR

203 59496
205 59496
522 ....58871, 58872
558 58873
801 58874

22 CFR

7 62196
40 62197
50 62196
126 58041

23 CFR

Proposed Rules:
620 58908
635 58908
636 58908
710 58908

24 CFR

25 60538
990 61350
4001 58418
Proposed Rules:
30 61754
570 61757

25 CFR

542 60492
543 60492
547 60508
Proposed Rules:
502 60490
546 60490

26 CFR

1 ....58438, 59501, 62199, 62203, 62204
54 62410
801 60627
Proposed Rules:
1 ....58514, 59575, 61770
54 60208

27 CFR

447 57239
478 57239
479 57239
555 57239

28 CFR

58 58438

29 CFR

403 57412
2509 ....58445, 61731, 61734
2550 ....58447, 58450, 58459
2578 58549
2590 62410
4022 61352
4044 61352
Proposed Rules:
3 62229
5 62229
1926 59714
2550 60657
2590 60208

30 CFR

203 58467
210 58875
260 58467
938 60944
950 57538

31 CFR

30 62205

32 CFR

112 59501
199 59504
212 59505
706 60947
750 60948
751 60949
756 60949
757 60950
Proposed Rules:
288 59579
325 59582
553 57017
1702 61771
1703 61772

33 CFR

100 ....57242, 60629
105 60951
110 ....57244, 60629
117 ....58473, 60629, 60952, 60953, 60954
147 60629
165 ....59509, 59511, 60629
Proposed Rules:
117 58070
165 62235

34 CFR

5b 61354

36 CFR

294 61456
1228 57245
Proposed Rules:
7 59585

37 CFR

10 59513
Proposed Rules:
201 ....58073, 60658
385 57033

38 CFR

3 61736
17 ....58875, 58877
59 58877
Proposed Rules:
5 62004

39 CFR

111 61355
3020 ....59514, 62184

40 CFR

3 61737
9 59034
49 61740
50 58042
52 ....56970, 57246, 58475, 59518, 60955, 60957, 61357
59 58481
60 59034
62 56981
80 ....57248, 59034, 61358
81 56983
85 59034
86 59034
89 59034
90 59034
91 59034
92 59034
94 59034
180 ....56995, 58880, 60151, 60963, 60969
197 61256
261 59523
1027 59034
1033 59034
1039 59034
1042 59034
1045 59034
1048 59034
1051 59034
1054 59034
1060 59034
1065 59034
1068 59034
1074 59034
Proposed Rules:
3 61773
50 58080
51 58080
52 ....57272, 58084, 58515, 58913, 59586, 60996, 61381
60 59956
61 59956
63 ....58352, 59956, 60432, 62384
80 57274
158 ....59382, 60211

161 ..... 59382, 60211
180 57040
228 60662
262 58388
264 58388
265 58388
266 58388
271 58388

42 CFR

9 60410
34 ..... 58047, 62210
73 61363
100 59528
411 57541
412 57541
413 ..... 56998, 57541
422 57541
441 57854
447 58491
489 57541

43 CFR

11 57259
46 61292

Proposed Rules:

403 58085
2300 60212
8360 57564

44 CFR

64 60158
65 60159
67 60162

Proposed Rules:

67 60216

45 CFR

144 62410
146 62410
148 62410

Proposed Rules:

144 60208
146 60208
148 60208

46 CFR

393 59530

47 CFR

0 57543
12 59537
25 56999
52 60172
64 60172
73 ..... 56999, 57268, 57551, 57552, 60631, 60974, 60975, 60976
76 61742
90 60631

Proposed Rules:

Ch. 1 59586
1 60997
27 57750
43 60997
73 ..... 57280, 60670, 60671, 62237, 62238, 62239
90 57750
400 57567

48 CFR

215 62211
252 62211

Proposed Rules:

204 62239
217 62239
501 57580
504 59589
511 59590
514 60224
515 57580
532 58515
552 ..... 57580, 58515, 59589, 59590, 60224
553 60224
1633 58886
2133 58886

49 CFR

1 ..... 57268, 59538
89 57268
171 57001
172 ..... 57001, 57008
173 57001
175 57001
176 57001
178 57001
179 57001
180 57001
192 62148
232 61512
541 60633
571 58887

Proposed Rules:

109 57281
571 57297
830 58520

50 CFR

17 61936
21 59448
22 59448
216 60976
222 ..... 57010, 60638
223 ..... 57010, 60638
224 60173
229 60640
622 ..... 58058, 58059
648 ..... 58497, 58498, 58898, 60986
660 ..... 58499, 60191, 60642, 60987
679 ..... 57011, 57553, 58061, 58503, 58504, 58899, 59538, 60994, 61366, 61367, 62212
697 58059

Proposed Rules:

17 ..... 57314, 58922, 61007
216 ..... 60754, 60836
226 ..... 57583, 58527
622 61015
679 ..... 57585, 62241
697 58099

REMINDERS

The items in this list were editorially compiled as an aid to Federal Register users. Inclusion or exclusion from this list has no legal significance.

RULES GOING INTO EFFECT OCTOBER 20, 2008

COMMERCE DEPARTMENT
Industry and Security Bureau
Mandatory Electronic Filing of Export and Reexport License Applications, Classification Requests, Encryption Review Requests, etc.; published 8-21-08

COMMERCE DEPARTMENT
National Telecommunications and Information Administration
Digital-to-Analog Converter Box Coupon Program:
Household Eligibility and Application Process for Individuals Residing in Nursing Homes, Intermediate Care Facilities, etc.; published 9-19-08

COMMODITY FUTURES TRADING COMMISSION
Exemption from Registration for Certain Firms with Regulation 30.10 Relief; published 9-18-08

DEFENSE DEPARTMENT
Defense Acquisition Regulations System
Defense Federal Acquisition Regulation Supplement:
Evaluation Factor for Use of Members of the Selected Reserve; published 10-20-08

DEFENSE DEPARTMENT
Engineers Corps
Restricted Areas:
Blount Island Command and Marine Corps Support Facility-Blount Island, Jacksonville, FL; published 9-18-08

ENERGY DEPARTMENT
Coordination of Federal Authorizations for Electric Transmission Facilities
Coordination of Federal Authorizations for Electric Transmission Facilities; published 9-19-08

ENVIRONMENTAL PROTECTION AGENCY
National Oil and Hazardous Substance Pollution Contingency Plan; National Priorities List; published 8-21-08

FEDERAL COMMUNICATIONS COMMISSION
Radio Broadcasting Services:
Beeville, Christine, George West, and Tilden, TX; published 9-18-08
Television Broadcasting Services:
Castle Rock, CO; published 9-19-08
Shreveport, LA; published 10-3-08

HEALTH AND HUMAN SERVICES DEPARTMENT
Centers for Disease Control and Prevention
Medical Examination of Aliens; Revisions to Medical Screening Process; published 10-20-08

HOUSING AND URBAN DEVELOPMENT DEPARTMENT
Manufactured home construction and safety standards:
Model manufactured home installation standards; establishment; published 10-19-07
Manufactured Home Installation Program; published 6-20-08

INTERIOR DEPARTMENT
National Park Service
Special Regulation; Areas of the National Park System; published 9-19-08

STATE DEPARTMENT
Board of Appellate Review; Review of Loss of Nationality; published 10-20-08
Uncertified Foreign Health-Care Workers; published 10-20-08

TRANSPORTATION DEPARTMENT
Federal Aviation Administration
Airworthiness Directives:
Engine Components, Inc. (ECi) Reciprocating Engine Cylinder Assemblies; published 9-15-08
Hawker Beechcraft Corporation Model 390 Airplanes; published 10-9-08
Airworthiness Standards:
Engine Control System Requirements; published 8-19-08

TREASURY DEPARTMENT
Internal Revenue Service
Section 1367 Regarding Open Account Debt; published 10-20-08
Unified Rule for Loss on Subsidiary Stock:
Correcting Amendment; published 10-20-08

COMMENTS DUE NEXT WEEK

AGRICULTURE DEPARTMENT
Agricultural Marketing Service
Domestic Dates Produced or Packed in Riverside County, CA; Decreased Assessment Rate; comments due by 10-27-08; published 8-26-08 [FR E8-19697]
Dried Prunes Produced in California; Decreased Assessment Rate; comments due by 10-27-08; published 8-26-08 [FR E8-19695]

AGRICULTURE DEPARTMENT
Animal and Plant Health Inspection Service
Importation of Grapes from Chile Under a Systems Approach; comments due by 10-27-08; published 8-27-08 [FR E8-19875]
Importation of Sweet Oranges and Grapefruit from Chile; comments due by 10-27-08; published 8-28-08 [FR E8-19871]

AGRICULTURE DEPARTMENT
Cooperative State Research, Education, and Extension Service
Competitive and Noncompetitive Non-formula Grant Programs:
General Grant Administrative Provisions and Program-Specific Administrative Provisions for the Specialty Crop Research Initiative; Correction; comments due by 10-30-08; published 9-5-08 [FR E8-20562]
Meetings:
Solicitation of Input from Stakeholders Regarding Programs for Hispanic-Serving Agricultural Colleges and Universities; comments due by 10-27-08; published 9-24-08 [FR E8-22418]

AGRICULTURE DEPARTMENT
Revision of Delegation of Authority; comments due by 10-30-08; published 9-30-08 [FR E8-22959]

COMMERCE DEPARTMENT
Industry and Security Bureau
National Defense Stockpile Market Impact Committee; Request for Public Comments:
Potential Market Impact of Proposed Stockpile Disposals for Fiscal Year 2010; comments due by 10-30-08; published 9-30-08 [FR E8-22734]

COMMERCE DEPARTMENT
National Oceanic and Atmospheric Administration
Characterization of the West Coast Deep-set Longline Fishery Operating Outside of the U.S. Exclusive Economic Zone; comments due by 10-29-08; published 9-29-08 [FR E8-22818]
Conducting Consultations Pursuant to Section 304(d) of the National Marine Sanctuaries Act; comments due by 10-31-08; published 8-26-08 [FR E8-19662]
Fisheries of the Exclusive Economic Zone Off Alaska:
Atka Mackerel in the Bering Sea and Aleutian Islands Management Area; comments due by 10-31-08; published 10-16-08 [FR E8-24585]
Pollock in Statistical Area 610 of the Gulf of Alaska; comments due by 10-31-08; published 10-16-08 [FR E8-24584]
Small Takes of Marine Mammals Incidental to Specified Activities; Seabird and Pinniped Research Activities in Central California; comments due by 10-29-08; published 9-29-08 [FR E8-22819]

ENERGY DEPARTMENT
Energy Conservation Program:
Test Procedures for Battery Chargers and External Power Supplies and for Multiple-Voltage External Power Supplies; comments due by 10-29-08; published 8-15-08 [FR E8-18576]

ENVIRONMENTAL PROTECTION AGENCY
Antimicrobial Registration Review Final Work Plans and Proposed Registration Review Decisions; Availability:
Sodium Hydroxide (Mineral Bases, Strong) and Capric (Decanoic) Acid; comments due by 10-28-08; published 8-29-08 [FR E8-20152]
Approval and Promulgation of Implementation Plans:
Vehicle Inspection and Maintenance Program,

Nevada; comments due by 10-27-08; published 9-25-08 [FR E8-22557]

Cyprodinil; Pesticide Tolerances; comments due by 10-27-08; published 8-27-08 [FR E8-19747]

Environmental Statements; Notice of Intent:

Coastal Nonpoint Pollution Control Programs; States and Territories—

Florida and South Carolina; Open for comments until further notice; published 2-11-08 [FR 08-00596]

Exemption from the Requirement of a Tolerance:

Bacillus subtilis GB03; comments due by 10-27-08; published 8-27-08 [FR E8-19860]

Pesticide Tolerances:

Dichlobenil; comments due by 10-27-08; published 8-27-08 [FR E8-19859]

Fenbuconazole; comments due by 10-27-08; published 8-27-08 [FR E8-19858]

State Hazardous Waste Management Program Revision:

Idaho; comments due by 10-30-08; published 9-30-08 [FR E8-22800]

FEDERAL COMMUNICATIONS COMMISSION

Agency Information Collection Activities; Proposals, Submissions, and Approvals; comments due by 10-27-08; published 8-28-08 [FR E8-20011]

FEDERAL DEPOSIT INSURANCE CORPORATION

Minimum Capital Ratios; Capital Adequacy Guidelines; Capital Maintenance; Capital:

Special Committee 215 Aeronautical Mobile Satellite (Route) Services Next Generation Satellite Services and Equipment; comments due by 10-30-08; published 9-30-08 [FR E8-22741]

Risk-Based Capital Guidelines; Capital Adequacy Guidelines:

Standardized Framework; comments due by 10-27-08; published 7-29-08 [FR E8-16262]

FEDERAL HOUSING FINANCING AGENCY

Golden Parachute Payments and Indemnification Payments; comments due by 10-31-08; published 9-16-08 [FR E8-21650]

FEDERAL RESERVE SYSTEM

Minimum Capital Ratios; Capital Adequacy Guidelines; Capital Maintenance; Capital:

Special Committee 215 Aeronautical Mobile Satellite (Route) Services Next Generation Satellite Services and Equipment; comments due by 10-30-08; published 9-30-08 [FR E8-22741]

Risk-Based Capital Guidelines; Capital Adequacy Guidelines:

Standardized Framework; comments due by 10-27-08; published 7-29-08 [FR E8-16262]

Risk-Based Capital Guidelines; Leverage Capital Guidelines; comments due by 10-31-08; published 9-26-08 [FR E8-22702]

Transactions Between Member Banks and Their Affiliates:

Exemption for Certain Purchases of Asset-Backed Commercial Paper by a Member Bank from an Affiliate; comments due by 10-31-08; published 9-26-08 [FR E8-22701]

HEALTH AND HUMAN SERVICES DEPARTMENT

Food and Drug Administration

New Animal Drugs; Cephalosporin Drugs; Extralabel Animal Drug Use:

Order of Prohibition; Extension of Comment Period; Delay of Effective Date of Final Rule; comments due by 11-1-08; published 8-18-08 [FR E8-18967]

HOMELAND SECURITY DEPARTMENT

Coast Guard

Drawbridge Operation Regulations:

Shrewsbury River, Route 36 Bridge, Highlands, NJ, Schedule Change; comments due by 11-1-08; published 8-8-08 [FR E8-18312]

Special Local Regulations for Marine Events:

Spa Creek, Annapolis, MD; comments due by 10-29-08; published 9-29-08 [FR E8-22442]

INTERIOR DEPARTMENT

Land Management Bureau

Land Withdrawals; Removal of Regulations Covering Emergency Withdrawals; comments due by 10-27-08; published 10-10-08 [FR E8-23823]

INTERIOR DEPARTMENT

Fish and Wildlife Service

Endangered and Threatened Wildlife and Plants:

Designation of Critical Habitat for the Peninsular Ranges Population of Desert Bighorn Sheep; comments due by 10-27-08; published 8-26-08 [FR E8-19465]

LABOR DEPARTMENT

Mine Safety and Health Administration

Alcohol- and Drug-Free Mines; Policy, Prohibitions, Testing, Training, and Assistance; comments due by 10-29-08; published 9-26-08 [FR E8-22679]

LIBRARY OF CONGRESS

Copyright Royalty Board, Library of Congress

Mechanical and Digital Phonorecord Delivery Rate Determination Proceeding; comments due by 10-31-08; published 10-1-08 [FR E8-23184]

OFFICE OF MANAGEMENT AND BUDGET

Management and Budget Office

Guidance for Drug Free Workplace Requirements (Financial Assistance); comments due by 10-27-08; published 9-26-08 [FR E8-22717]

PERSONNEL MANAGEMENT OFFICE

Determining Rate of Basic Pay; Collection by Offset From Indebted Government Employees; comments due by 10-27-08; published 8-27-08 [FR E8-19819]

SMALL BUSINESS ADMINISTRATION

Women-Owned Small Business Federal Contract Assistance Procedures; comments due by 10-31-08; published 10-1-08 [FR E8-23139]

TRANSPORTATION DEPARTMENT

Federal Aviation Administration

Airworthiness Directives:

328 Support Services GmbH Dornier Model 328 100 Airplanes; comments due by 10-30-08; published 9-30-08 [FR E8-22907]

Dowty Propellers R175/4-30; R184/4-30-4; R193/4-30-4; R.209/4-40-4.5 et al. Model Propellers; comments due by 10-28-08; published 8-29-08 [FR E8-20081]

Saab Model SAAB Fairchild SF340A (SAAB/SF340A) and SAAB 340B Airplanes; comments due by 10-30-08; published 9-30-08 [FR E8-22915]

Vulcanair S.p.A. Model P68 Series Airplanes; comments due by 10-27-08; published 9-26-08 [FR E8-22338]

TREASURY DEPARTMENT

Comptroller of the Currency

Minimum Capital Ratios; Capital Adequacy Guidelines; Capital Maintenance; Capital:

Special Committee 215 Aeronautical Mobile Satellite (Route) Services Next Generation Satellite Services and Equipment; comments due by 10-30-08; published 9-30-08 [FR E8-22741]

Risk-Based Capital Guidelines; Capital Adequacy Guidelines:

Standardized Framework; comments due by 10-27-08; published 7-29-08 [FR E8-16262]

Risk-Based Capital Guidelines; Money Market Mutual Funds; comments due by 10-31-08; published 9-26-08 [FR E8-22720]

TREASURY DEPARTMENT

Internal Revenue Service

Alcohol Fuel and Biodiesel; Renewable Diesel; Alternative Fuel; Diesel-Water Fuel Emulsion; Taxable Fuel Definitions; Excise Tax Returns; comments due by 10-27-08; published 7-29-08 [FR E8-17270]

TREASURY DEPARTMENT

Terrorism Risk Insurance Programs:

Cap on Annual Liability; comments due by 10-30-08; published 9-30-08 [FR E8-22940]

TREASURY DEPARTMENT

Thrift Supervision Office

Minimum Capital Ratios; Capital Adequacy Guidelines; Capital Maintenance; Capital:

Special Committee 215 Aeronautical Mobile Satellite (Route) Services Next Generation Satellite Services and Equipment; comments due by 10-30-

08; published 9-30-08 [FR E8-22741]

Risk-Based Capital Guidelines; Capital Adequacy Guidelines:
Standardized Framework; comments due by 10-27-08; published 7-29-08 [FR E8-16262]

LIST OF PUBLIC LAWS

This is a continuing list of public bills from the current session of Congress which have become Federal laws. It may be used in conjunction with "P L U S" (Public Laws Update Service) on 202–741–6043. This list is also available online at *http://www.archives.gov/federal-register/laws.html*.

The text of laws is not published in the **Federal Register** but may be ordered in "slip law" (individual pamphlet) form from the Superintendent of Documents, U.S. Government Printing Office, Washington, DC 20402 (phone, 202–512–1808). The text will also be made available on the Internet from GPO Access at *http://www.gpoaccess.gov/plaws/index.html*. Some laws may not yet be available.

H.R. 1714/P.L. 110–419
To clarify the boundaries of Coastal Barrier Resources System Clam Pass Unit FL-64P. (Oct. 15, 2008; 122 Stat. 4773)

H.R. 4544/P.L. 110–420
Code Talkers Recognition Act of 2008 (Oct. 15, 2008; 122 Stat. 4774)

H.R. 6045/P.L. 110–421
Bulletproof Vest Partnership Grant Act of 2008 (Oct. 15, 2008; 122 Stat. 4778)

H.R. 6063/P.L. 110–422
National Aeronautics and Space Administration Authorization Act of 2008 (Oct. 15, 2008; 122 Stat. 4779)

H.R. 6073/P.L. 110–423
To provide that Federal employees receiving their pay by electronic funds transfer shall be given the option of receiving their pay stubs electronically. (Oct. 15, 2008; 122 Stat. 4818)

H.R. 6083/P.L. 110–424
To authorize funding to conduct a national training program for State and local prosecutors. (Oct. 15, 2008; 122 Stat. 4819)

H.R. 6353/P.L. 110–425
Ryan Haight Online Pharmacy Consumer Protection Act of 2008 (Oct. 15, 2008; 122 Stat. 4820)

H.R. 6469/P.L. 110–426
Stephanie Tubbs Jones Organ Transplant Authorization Act of 2008 (Oct. 15, 2008; 122 Stat. 4835)

H.R. 6524/P.L. 110–427
To authorize the Administrator of General Services to take certain actions with respect to parcels of real property located in Eastlake, Ohio, and Koochiching County, Minnesota, and for other purposes. (Oct. 15, 2008; 122 Stat. 4837)

H.R. 7082/P.L. 110–428
Inmate Tax Fraud Prevention Act of 2008 (Oct. 15, 2008; 122 Stat. 4839)

H.R. 7177/P.L. 110–429
To authorize the transfer of naval vessels to certain foreign recipients, and for other purposes. (Oct. 15, 2008; 122 Stat. 4842)

H.J. Res. 100/P.L. 110–430
Appointing the day for the convening of the first session of the One Hundred Eleventh Congress and establishing the date for the counting of the electoral votes for President and Vice President cast by the electors in December 2008. (Oct. 15, 2008; 122 Stat. 4846)

S. 3641/P.L. 110–431

To authorize funding for the National Crime Victim Law Institute to provide support for victims of crime under Crime Victims Legal Assistance Programs as a part of the Victims of Crime Act of 1984. (Oct. 15, 2008; 122 Stat. 4847)

Last List October 17, 2008

Public Laws Electronic Notification Service (PENS)

PENS is a free electronic mail notification service of newly enacted public laws. To subscribe, go to *http://listserv.gsa.gov/archives/publaws-l.html*

Note: This service is strictly for E-mail notification of new laws. The text of laws is not available through this service. **PENS** cannot respond to specific inquiries sent to this address.

CFR CHECKLIST

This checklist, prepared by the Office of the Federal Register, is published weekly. It is arranged in the order of CFR titles, stock numbers, prices, and revision dates.

An asterisk (*) precedes each entry that has been issued since last week and which is now available for sale at the Government Printing Office.

A checklist of current CFR volumes comprising a complete CFR set, also appears in the latest issue of the LSA (List of CFR Sections Affected), which is revised monthly.

The CFR is available free on-line through the Government Printing Office's GPO Access Service at http://www.gpoaccess.gov/cfr/index.html. For information about GPO Access call the GPO User Support Team at 1-888-293-6498 (toll free) or 202-512-1530.

The annual rate for subscription to all revised paper volumes is $1499.00 domestic, $599.60 additional for foreign mailing.

Mail orders to the Superintendent of Documents, Attn: New Orders, P.O. Box 371954, Pittsburgh, PA 15250–7954. All orders must be accompanied by remittance (check, money order, GPO Deposit Account, VISA, Master Card, or Discover). Charge orders may be telephoned to the GPO Order Desk, Monday through Friday, at **(202) 512–1800** from 8:00 a.m. to 4:00 p.m. eastern time, or FAX your charge orders to **(202) 512-2250**.

Title	Stock Number	Price	Revision Date
1	(869–064–00001–7)	5.00	[4] Jan. 1, 2008
2	(869–064–00002–5)	8.00	Jan. 1, 2008
3 (2006 Compilation and Parts 100 and 102)	(869–064–00003–3)	35.00	[1] Jan. 1, 2008
4	(869–064–00004–1)	13.00	Jan. 1, 2008
5 Parts:			
1–699	(869–064–00005–0)	63.00	Jan. 1, 2008
700–1199	(869–064–00006–8)	53.00	Jan. 1, 2008
1200–End	(869–064–00007–6)	64.00	Jan. 1, 2008
6	(869–064–00008–4)	13.50	Jan. 1, 2008
7 Parts:			
1–26	(869–064–00009–2)	47.00	Jan. 1, 2008
27–52	(869–064–00010–6)	52.00	Jan. 1, 2008
53–209	(869–064–00011–4)	40.00	Jan. 1, 2008
210–299	(869–064–00012–2)	65.00	Jan. 1, 2008
300–399	(869–064–00013–1)	49.00	Jan. 1, 2008
400–699	(869–064–00014–9)	45.00	Jan. 1, 2008
700–899	(869–064–00015–7)	46.00	Jan. 1, 2008
900–999	(869–064–00016–5)	63.00	Jan. 1, 2008
1000–1199	(869–064–00017–3)	22.00	Jan. 1, 2008
1200–1599	(869–064–00018–1)	64.00	Jan. 1, 2008
1600–1899	(869–064–00019–0)	67.00	Jan. 1, 2008
1900–1939	(869–064–00020–3)	31.00	Jan. 1, 2008
1940–1949	(869–064–00021–1)	50.00	Jan. 1, 2008
1950–1999	(869–064–00022–0)	49.00	Jan. 1, 2008
2000–End	(869–064–00023–8)	53.00	Jan. 1, 2008
8	(869–064–00024–6)	66.00	Jan. 1, 2008
9 Parts:			
1–199	(869–064–00025–4)	64.00	Jan. 1, 2008
200–End	(869–064–00026–2)	61.00	Jan. 1, 2008
10 Parts:			
1–50	(869–064–00027–1)	64.00	Jan. 1, 2008
51–199	(869–064–00028–9)	61.00	Jan. 1, 2008
200–499	(869–064–00029–7)	46.00	Jan. 1, 2008
500–End	(869–064–00030–1)	65.00	Jan. 1, 2008
11	(869–064–00031–9)	44.00	Jan. 1, 2008
12 Parts:			
1–199	(869–064–00032–7)	37.00	Jan. 1, 2008
200–219	(869–064–00033–5)	40.00	Jan. 1, 2008
220–299	(869–064–00034–3)	64.00	Jan. 1, 2008
300–499	(869–064–00035–1)	47.00	Jan. 1, 2008
500–599	(869–064–00036–0)	42.00	Jan. 1, 2008
600–899	(869–064–00037–8)	59.00	Jan. 1, 2008
900–End	(869–064–00038–6)	53.00	Jan. 1, 2008
13	(869–064–00039–4)	58.00	Jan. 1, 2008
14 Parts:			
1–59	(869–064–00040–8)	66.00	Jan. 1, 2008
60–139	(869–064–00041–6)	61.00	Jan. 1, 2008
140–199	(869–064–00042–4)	33.00	Jan. 1, 2008
200–1199	(869–064–00043–2)	53.00	Jan. 1, 2008
1200–End	(869–064–00044–1)	48.00	Jan. 1, 2008
15 Parts:			
0–299	(869–064–00045–9)	43.00	Jan. 1, 2008
300–799	(869–064–00046–7)	63.00	Jan. 1, 2008
800–End	(869–064–00047–5)	45.00	Jan. 1, 2008
16 Parts:			
0–999	(869–064–00048–3)	53.00	Jan. 1, 2008
1000–End	(869–064–00049–1)	63.00	Jan. 1, 2008
17 Parts:			
1–199	(869–064–00051–3)	53.00	Apr. 1, 2008
200–239	(869–064–00052–1)	63.00	Apr. 1, 2008
240–End	(869–064–00053–0)	65.00	Apr. 1, 2008
18 Parts:			
1–399	(869–064–00054–8)	65.00	Apr. 1, 2008
400–End	(869–064–00055–6)	29.00	Apr. 1, 2008
19 Parts:			
1–140	(869–064–00056–4)	64.00	Apr. 1, 2008
141–199	(869–064–00057–2)	61.00	Apr. 1, 2008
200–End	(869–064–00058–1)	34.00	Apr. 1, 2008
20 Parts:			
1–399	(869–064–00059–9)	53.00	Apr. 1, 2008
400–499	(869–064–00060–2)	67.00	Apr. 1, 2008
500–End	(869–064–00061–1)	66.00	Apr. 1, 2008
21 Parts:			
1–99	(869–064–00062–9)	43.00	Apr. 1, 2008
100–169	(869–064–00063–7)	52.00	Apr. 1, 2008
170–199	(869–064–00064–5)	53.00	Apr. 1, 2008
200–299	(869–064–00065–3)	20.00	Apr. 1, 2008
300–499	(869–064–00066–1)	33.00	Apr. 1, 2008
500–599	(869–064–00067–0)	50.00	Apr. 1, 2008
600–799	(869–064–00068–8)	20.00	Apr. 1, 2008
800–1299	(869–064–00069–6)	63.00	Apr. 1, 2008
1300–End	(869–064–00070–0)	28.00	Apr. 1, 2008
22 Parts:			
1–299	(869–064–00071–8)	66.00	Apr. 1, 2008
300–End	(869–064–00072–6)	48.00	Apr. 1, 2008
23	(869–064–00073–4)	48.00	Apr. 1, 2008
24 Parts:			
0–199	(869–064–00074–2)	63.00	Apr. 1, 2008
200–499	(869–064–00075–1)	53.00	Apr. 1, 2008
500–699	(869–064–00076–9)	33.00	Apr. 1, 2008
700–1699	(869–064–00077–7)	64.00	Apr. 1, 2008
1700–End	(869–064–00078–5)	33.00	Apr. 1, 2008
25	(869–064–00079–3)	67.00	Apr. 1, 2008
26 Parts:			
§§ 1.0–1–1.60	(869–064–00080–7)	52.00	Apr. 1, 2008
§§ 1.61–1.169	(869–064–00081–5)	66.00	Apr. 1, 2008
§§ 1.170–1.300	(869–064–00082–3)	63.00	Apr. 1, 2008
§§ 1.301–1.400	(869–064–00083–1)	50.00	Apr. 1, 2008
§§ 1.401–1.440	(869–064–00084–0)	59.00	Apr. 1, 2008
§§ 1.441–1.500	(869–064–00085–8)	61.00	Apr. 1, 2008
§§ 1.501–1.640	(869–064–00086–6)	52.00	Apr. 1, 2008
§§ 1.641–1.850	(869–064–00087–4)	64.00	Apr. 1, 2008
§§ 1.851–1.907	(869–064–00088–2)	64.00	Apr. 1, 2008
§§ 1.908–1.1000	(869–064–00089–1)	63.00	Apr. 1, 2008
§§ 1.1001–1.1400	(869–064–00090–4)	64.00	Apr. 1, 2008
§§ 1.1401–1.1550	(869–064–00091–2)	61.00	Apr. 1, 2008
§§ 1.1551–End	(869–064–00092–1)	53.00	Apr. 1, 2008
2–29	(869–064–00093–9)	63.00	Apr. 1, 2008
30–39	(869–064–00094–7)	44.00	Apr. 1, 2008
40–49	(869–064–00095–5)	31.00	[6] Apr. 1, 2008
50–299	(869–064–00096–3)	45.00	Apr. 1, 2008

Title	Stock Number	Price	Revision Date
300–499	(869–064–00097–1)	64.00	Apr. 1, 2008
500–599	(869–064–00098–0)	12.00	[5] Apr. 1, 2008
600–End	(869–064–00099–8)	20.00	Apr. 1, 2008
27 Parts:			
1–39	(869–064–00100–5)	35.00	Apr. 1, 2008
40–399	(869–064–00101–3)	67.00	Apr. 1, 2008
400–End	(869–064–00102–1)	21.00	Apr. 1, 2008
28 Parts:			
0–42	(869–064–00103–0)	64.00	July 1, 2008
43–End	(869–064–00104–8)	63.00	July 1, 2008
29 Parts:			
*0–99	(869–064–00105–6)	53.00	July 1, 2008
100–499	(869–062–00106–1)	23.00	July 1, 2007
500–899	(869–062–00107–0)	61.00	[7] July 1, 2007
900–1899	(869–064–00108–1)	39.00	July 1, 2008
*1900–1910 (§§ 1900 to 1910.999)	(869–064–00109–9)	64.00	July 1, 2008
1910 (§§ 1910.1000 to end)	(869–062–00110–0)	46.00	July 1, 2007
*1911–1925	(869–064–00111–1)	33.00	July 1, 2008
1926	(869–064–00112–9)	53.00	July 1, 2008
*1927–End	(869–064–00113–7)	65.00	July 1, 2008
30 Parts:			
1–199	(869–064–00114–5)	60.00	July 1, 2008
*200–699	(869–064–00115–3)	53.00	July 1, 2008
*700–End	(869–064–00116–1)	61.00	July 1, 2008
31 Parts:			
0–199	(869–064–00117–0)	44.00	July 1, 2008
200–499	(869–064–00118–8)	49.00	July 1, 2008
500–End	(869–064–00119–6)	65.00	July 1, 2008
32 Parts:			
1–39, Vol. I		15.00	[2] July 1, 1984
1–39, Vol. II		19.00	[2] July 1, 1984
1–39, Vol. III		18.00	[2] July 1, 1984
1–190	(869–064–00120–0)	64.00	July 1, 2008
191–399	(869–064–00121–8)	66.00	July 1, 2008
400–629	(869–064–00122–6)	53.00	July 1, 2008
630–699	(869–064–00123–4)	40.00	July 1, 2008
700–799	(869–064–00124–2)	49.00	July 1, 2008
800–End	(869–064–00125–1)	50.00	July 1, 2008
33 Parts:			
1–124	(869–064–00126–9)	60.00	July 1, 2008
125–199	(869–062–00127–4)	61.00	July 1, 2007
*200–End	(869–064–00128–5)	60.00	July 1, 2008
34 Parts:			
1–299	(869–064–00129–3)	53.00	July 1, 2008
300–399	(869–064–00130–7)	43.00	July 1, 2008
400–End & 35	(869–062–00131–2)	61.00	July 1, 2007
36 Parts:			
1–199	(869–062–00132–1)	37.00	July 1, 2007
200–299	(869–062–00133–9)	37.00	July 1, 2007
300–End	(869–064–00134–0)	64.00	July 1, 2008
37	(869–064–00135–8)	61.00	July 1, 2008
38 Parts:			
*0–17	(869–064–00136–6)	63.00	July 1, 2008
*18–End	(869–064–00137–4)	65.00	July 1, 2008
39	(869–064–00138–2)	45.00	July 1, 2008
40 Parts:			
1–49	(869–062–00139–8)	60.00	July 1, 2007
50–51	(869–064–00140–4)	48.00	July 1, 2008
52 (52.01–52.1018)	(869–064–00141–2)	61.00	July 1, 2008
52 (52.1019–End)	(869–064–00142–1)	67.00	July 1, 2008
53–59	(869–064–00143–9)	34.00	July 1, 2008
*60 (60.1–End)	(869–064–00144–7)	61.00	July 1, 2008
*60 (Apps)	(869–064–00145–5)	60.00	July 1, 2008
61–62	(869–064–00146–3)	48.00	July 1, 2008
63 (63.1–63.599)	(869–064–00147–1)	61.00	July 1, 2008
63 (63.600–63.1199)	(869–062–00148–7)	50.00	July 1, 2007
63 (63.1200–63.1439)	(869–064–00149–8)	53.00	July 1, 2008
63 (63.1440–63.6175)	(869–064–00150–1)	35.00	July 1, 2008
63 (63.6580–63.8830)	(869–062–00151–7)	32.00	July 1, 2007
63 (63.8980–End)	(869–064–00152–8)	38.00	July 1, 2008
64–71	(869–064–00153–6)	32.00	July 1, 2008
72–80	(869–062–00154–1)	62.00	July 1, 2007
81–84	(869–064–00155–2)	53.00	July 1, 2008
85–86 (85–86.599–99)	(869–064–00156–1)	64.00	July 1, 2008
86 (86.600–1–End)	(869–064–00157–9)	53.00	July 1, 2008
*87–99	(869–064–00158–7)	63.00	July 1, 2008
100–135	(869–064–00159–5)	48.00	July 1, 2008
136–149	(869–062–00160–6)	61.00	July 1, 2007
150–189	(869–062–00161–4)	50.00	July 1, 2007
190–259	(869–064–00162–5)	42.00	July 1, 2008
260–265	(869–064–00163–3)	53.00	July 1, 2008
266–299	(869–062–00164–9)	50.00	July 1, 2007
300–399	(869–064–00165–0)	45.00	July 1, 2008
*400–424	(869–064–00166–8)	59.00	July 1, 2008
425–699	(869–062–00167–3)	61.00	July 1, 2007
*700–789	(869–064–00168–4)	64.00	July 1, 2008
*790–End	(869–064–00169–2)	64.00	July 1, 2008
41 Chapters:			
1, 1–1 to 1–10		13.00	[3] July 1, 1984
1, 1–11 to Appendix, 2 (2 Reserved)		13.00	[3] July 1, 1984
3–6		14.00	[3] July 1, 1984
7		6.00	[3] July 1, 1984
8		4.50	[3] July 1, 1984
9		13.00	[3] July 1, 1984
10–17		9.50	[3] July 1, 1984
18, Vol. I, Parts 1–5		13.00	[3] July 1, 1984
18, Vol. II, Parts 6–19		13.00	[3] July 1, 1984
18, Vol. III, Parts 20–52		13.00	[3] July 1, 1984
19–100		13.00	[3] July 1, 1984
1–100	(869–064–00170–6)	27.00	July 1, 2008
101	(869–062–00171–1)	21.00	July 1, 2007
102–200	(869–064–00172–2)	56.00	July 1, 2008
201–End	(869–064–00173–1)	27.00	July 1, 2008
42 Parts:			
1–399	(869–062–00174–6)	61.00	Oct. 1, 2007
400–413	(869–062–00175–4)	32.00	Oct. 1, 2007
414–429	(869–062–00176–2)	32.00	Oct. 1, 2007
430–End	(869–062–00177–1)	64.00	Oct. 1, 2007
43 Parts:			
1–999	(869–062–00178–9)	56.00	Oct. 1, 2007
1000–end	(869–062–00179–7)	62.00	Oct. 1, 2007
44	(869–062–00180–1)	50.00	Oct. 1, 2007
45 Parts:			
1–199	(869–062–00181–9)	60.00	Oct. 1, 2007
200–499	(869–060–00182–7)	34.00	[9] Oct. 1, 2007
500–1199	(869–062–00183–5)	56.00	Oct. 1, 2007
1200–End	(869–062–00184–3)	61.00	Oct. 1, 2007
46 Parts:			
1–40	(869–062–00185–1)	46.00	Oct. 1, 2007
41–69	(869–062–00186–0)	39.00	Oct. 1, 2007
70–89	(869–062–00187–8)	14.00	Oct. 1, 2007
90–139	(869–062–00188–6)	44.00	Oct. 1, 2007
140–155	(869–062–00189–4)	25.00	Oct. 1, 2007
156–165	(869–062–00190–8)	34.00	Oct. 1, 2007
166–199	(869–062–00191–6)	46.00	Oct. 1, 2007
200–499	(869–062–00192–4)	40.00	Oct. 1, 2007
500–End	(869–062–00193–2)	25.00	Oct. 1, 2007
47 Parts:			
0–19	(869–062–00194–1)	61.00	Oct. 1, 2007
20–39	(869–062–00195–9)	46.00	Oct. 1, 2007
40–69	(869–062–00196–7)	40.00	Oct. 1, 2007
70–79	(869–062–00197–5)	61.00	Oct. 1, 2007
80–End	(869–062–00198–3)	61.00	Oct. 1, 2007
48 Chapters:			
1 (Parts 1–51)	(869–062–00199–1)	63.00	Oct. 1, 2007
1 (Parts 52–99)	(869–062–00200–9)	49.00	Oct. 1, 2007
2 (Parts 201–299)	(869–062–00201–7)	50.00	Oct. 1, 2007
3–6	(869–062–00202–5)	34.00	Oct. 1, 2007

Title	Stock Number	Price	Revision Date
7–14	(869–062–00203–3)	56.00	Oct. 1, 2007
15–28	(869–062–00204–1)	47.00	Oct. 1, 2007
29–End	(869–062–00205–0)	47.00	Oct. 1, 2007
49 Parts:			
1–99	(869–062–00206–8)	60.00	Oct. 1, 2007
100–185	(869–062–00207–6)	63.00	Oct. 1, 2007
186–199	(869–062–00208–4)	23.00	Oct. 1, 2007
200–299	(869–062–00208–1)	32.00	Oct. 1, 2007
300–399	(869–062–00210–6)	32.00	Oct. 1, 2007
400–599	(869–062–00210–3)	64.00	Oct. 1, 2007
600–999	(869–062–00212–2)	19.00	Oct. 1, 2007
1000–1199	(869–062–00213–1)	28.00	Oct. 1, 2007
1200–End	(869–062–00214–9)	34.00	Oct. 1, 2007
50 Parts:			
1–16	(869–062–00215–7)	11.00	Oct. 1, 2007
17.1–17.95(b)	(869–062–00216–5)	32.00	Oct. 1, 2007
17.95(c)–end	(869–062–00217–3)	32.00	Oct. 1, 2007
17.96–17.99(h)	(869–062–00218–1)	61.00	Oct. 1, 2007
17.99(i)–end and 17.100–end	(869–062–00219–0)	47.00	[8] Oct. 1, 2007
18–199	(869–062–00226–3)	50.00	Oct. 1, 2007
200–599	(869–062–00221–1)	45.00	Oct. 1, 2007
600–659	(869–062–00222–0)	31.00	Oct. 1, 2007
660–End	(869–062–00223–8)	31.00	Oct. 1, 2007
CFR Index and Findings Aids	(869–064–00050–5)	65.00	Jan. 1, 2008
Complete 2008 CFR set		1,499.00	2008
Microfiche CFR Edition:			
Subscription (mailed as issued)		406.00	2008
Individual copies		4.00	2008
Complete set (one-time mailing)		332.00	2007
Complete set (one-time mailing)		332.00	2006

[1] Because Title 3 is an annual compilation, this volume and all previous volumes should be retained as a permanent reference source.

[2] The July 1, 1985 edition of 32 CFR Parts 1–189 contains a note only for Parts 1–39 inclusive. For the full text of the Defense Acquisition Regulations in Parts 1–39, consult the three CFR volumes issued as of July 1, 1984, containing those parts.

[3] The July 1, 1985 edition of 41 CFR Chapters 1–100 contains a note only for Chapters 1 to 49 inclusive. For the full text of procurement regulations in Chapters 1 to 49, consult the eleven CFR volumes issued as of July 1, 1984 containing those chapters.

[4] No amendments to this volume were promulgated during the period January 1, 2005, through January 1, 2006. The CFR volume issued as of January 1, 2005 should be retained.

[5] No amendments to this volume were promulgated during the period April 1, 2000, through April 1, 2007. The CFR volume issued as of April 1, 2000 should be retained.

[6] No amendments to this volume were promulgated during the period April 1, 2006 through April 1, 2007. The CFR volume issued as of April 1, 2006 should be retained.

[7] No amendments to this volume were promulgated during the period July 1, 2006, through July 1, 2007. The CFR volume issued as of July 1, 2006 should be retained.

[8] No amendments to this volume were promulgated during the period October 1, 2005, through October 1, 2007. The CFR volume issued as of October 1, 2005 should be retained.

[9] No amendments to this volume were promulgated during the period October 1, 2006, through October 1, 2007. The CFR volume issued as of October 1, 2006 should be retained.